FLOWFIT®

MANUFACTURERS AND SUPPLIERS OF HYDRAULIC COMPONENTS

2015 CATALOGUE

YOUR DISCOUNT:
50% OFF
ALL PRICES
IN THIS CATALOGUE

www.flowfitonline.com

FLOWFIT®

RELEASES NEW 2015 FLOWFIT HYDRAULIC CATALOGUE

It gives us great pleasure to present to you the Hydraulic Sector's largest privately owned Hydraulic Component and Systems catalogue – jam-packed with all hydraulic products to suit all your needs.

Since our establishment back in 1996 we have seen Flowfit grow to a level we are extremely proud of today making Flowfit the best possible route for all your hydraulic needs.

Within the new catalogue release we would like to draw your attention to the huge stock investment we have made in the following new products section.

• NEW PRODUCTS • NEW PRODUCTS •

FLOWFIT®
CETOP 3 AND CETOP 5 VALVES

FLOWFIT®
HYDRAULIC QUICK RELEASES

FLOWFIT®
3 WAY AND 6 WAY HYDRAULIC DIVERTERS

FLOWFIT®
HYDRAULIC POWERUNITS 12VDC AND 24VDC

FLOWFIT®
ENGINE DRIVEN HYDRAULIC POWERUNITS

FLOWFIT®
NEW CARTRIDGE VALVES

Gates
GATES HOSE, FITTINGS AND MACHINERY

FILTREC Technical Filtration
FILTREC TECHNICAL FILTRATION PRODUCTS

These new products add to a mammoth 956 page catalogue and thousands of new items added to our inventory.

Flowfit continues to invest in the best service, stock holding and deliveries in the industry and really Flowfit remains your number 1 choice in the hydraulic field.

Why not come and see the very first Flowfit Trade Shop which opened in February 2013 showcasing the World's first Hydraulic Component and Systems Trade Shop that we know of, at Flowfit you can purchase ready made powerunits or purchase every item you need to make your hydraulic system with our technically trained sales team.

We look forward to seeing you all at Flowfit or discussing your latest requirements with our sales team.

Thank you for your continued support.

With warmest thanks.

Simon Parsonage

MANAGING DIRECTOR
FLOWFIT®

FLOWFIT®

QUALITY PRODUCTS

Everything you buy from us is guaranteed for a minimum of 12 months. If during this time a manufacturers fault develops then we will either replace it free of charge or repair it. Please note all hydraulic powerunits are return to base. We are proud to be a QMS ISO 9002 Registered Firm.

FREE ADVICE

If you are not sure what you need or you can't find a particular product – call us we're here to help you. Our Technical Sales team is given the latest training and can source and advise the best products to suit your specific needs or we can design a system to suit with our in-house audited hydraulic engineers. We will also provide technical support and a free site visit to discuss your requirements.

YOUR DISCOUNT

50% OFF

ALL CATALOGUE PRODUCTS

SPECIAL DISCOUNTS AVAILABLE. PLEASE CALL THE SALES TEAM TO DISCUSS

FLOWFIT® Galtech s.p.a. OLEODINAMICA IKRON® LONCIN Gates M+S HYDRAULIC

BUCHER HYDRAULICS FILTREC Technical Filtration POWERED by HONDA mintor® HATZ DIESEL

KEEPING INDUSTRY MOVING

HOW TO ORDER

PHONE: 01584 876033

Monday - Thursday 8.30am - 5.00pm
Friday 8.00am - 4.00pm
Saturday 8.30am - 4.00pm

EMAIL: SALES@FLOWFITONLINE.COM

You can email your order to our fully qualified sales team 24 hours a day, 7 days a week.

BY MAIL

Harrier Fluid Power Ltd T/A Flowfit
Parys Road, Ludlow Business Park
Ludlow, Shropshire SY8 1XY

ONLINE: WWW.FLOWFITONLINE.COM

Online ordering is the quickest and most convenient way to all the industrial supplies you need, 24 hours a day, 7 days a week.

FAX: 01584 876044

Fax orders, 24/7

VISIT OUR TRADE COUNTER IN LUDLOW

Flowfit

Parys Road, Ludlow Business Park, Ludlow, Shropshire SY8 1XY

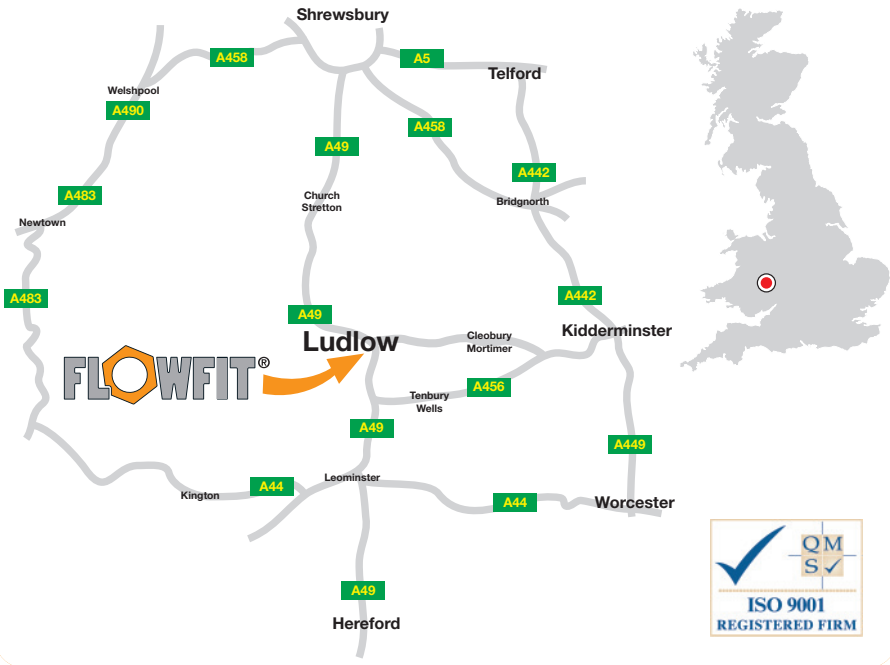

ISO 9001 REGISTERED FIRM

All prices in this catalogue are excluding V.A.T.

EASY PAYMENT OPTIONS

CREDIT ACCOUNT

Setting up a business credit account is quick and easy just fill out a credit form, downloadable from the website **www.flowfitonline.com**

OTHER PAYMENT METHODS

For your convenience we have several easy payment options for you to choose from:

Credit & Debit Cards

Cash at our Trade Counter

BACS Transfers

Cheque

Paypal Payments

SATISFACTION GUARANTEE

In the unlikely event that you are not completely satisfied with your purchase, you can return your unused stock item for a full refund. Simply retain your original packaging and contact our Customer Services on 01584 876033 and we will arrange a free collection at a time that is convenient for you.

BFPDA The British Fluid Power Distributors Association (Affiliated to BFPA)

PROMOTING THE HIGHEST STANDARD IN FLUID POWER DISTRIBUTION

SECURE ONLINE ORDERING

WITH FREE DELIVERY

All products in this catalogue are available to purchase online at

www.flowfitonline.com

- 100% SECURE SHOPPING
- HASSLE FREE DELIVERY DIRECT TO YOUR DOOR
- NO QUIBBLE GUARANTEE
- 24 HOUR SHOPPING
- UK BASED CALL CENTRE

Selected products and special offers can also be found on our ebay store.

OVERSEAS CUSTOMERS

All items in this catalogue and at www.flowfitonline.com are available to overseas customers, please contact us for shipping costs.

FLOWFIT®

SHOP NOW OPEN 6 DAYS A WEEK

FOLLOW US ON YouTube

TRADE CREDIT APPLICATION

Full Name:	Nature of Business:
Legal Entity:	
Invoice Address:	Registered Office:
Tel No: Fax No:	Established (No. of Years):
Contact Name:	Company Registration No:
E-Mail address:	Vat Registration No:

Sole Trader/Partner 1/Director 1 — Partner 2/Director 2

Full Name:	Full Name:
Home Address:	Home Address:

Bank Reference — Trade Reference 1 — Trade Reference 2

Institution Name:	Company Name:	Company Name:
Contact Name:	Contact Name:	Contact Name:
Address:	Address:	Address:
Telephone No:	Telephone No:	Telephone No:
Duration of Relationship:	A/C Open Since:	A/C Open Since:
	Credit Limit:	Credit Limit:

Expected Monthly Sales:	Max Amount of Credit Required:

Agreement to the Company's Terms and Conditions of Sale

1. I have read and understood the Company's Terms and conditions for the Supply of Goods and Service and agree to abide by them
2. I am aware that the Company must be notified of any discrepancies or queries as follows:
   * Invoice queries or Product quantity or description problems - within 10 days of receipt
   * Faulty products - within 10 days of receipt
3. I confirm acceptance of the Company payment terms of 30 days from date of invoice
4. I give my consent to a credit search being made on me as owner/partner or director of this organisation both now & at any future date. I understand this search will be recorded by the agency & may be disclosed to subsequent enquirers. (To be signed by an officer of the company or employee authorised to agree such matters.)

Signed:	Print Name:
Date:	Position:

Credit Limit: £	Authorised by:	Customer Advised:

See our terms and conditions at www.flowfitonline.com

UK AND INTERNATIONAL DELIVERY OPTIONS

FREE NEXT DAY DELIVERY ON ALL WEB ORDERS

DHL FedEx

ORDERS PLACED OVER THE PHONE OR FAXED WILL BE SUBJECT TO OUR STANDARD DELIVERY CHARGES.

Royal Mail TNT

ORDER BY 4.30pm FOR NEXT DAY DELIVERY THROUGHOUT THE UK.

SPECIAL DELIVERY AVAILABLE

NEXT DAY BY 9.30am • NEXT DAY BY 10.30am • NEXT DAY BY 12 noon

SAME DAY OR SATURDAY DELIVERY

CONTACT US FOR A QUOTATION SHOULD YOU REQUIRE THIS OPTION.

SHIP DIRECT

USE OUR STOCK TO SHIP DIRECTLY TO YOUR CUSTOMERS, NO FLOWFIT PAPERWORK, YOUR PAPERWORK SENT DIRECT WITH THE GOODS.

CALL US TODAY

- CROSS REFERENCE SERVICE
- TECHNICAL SUPPORT
- FULL HYDRAULIC SYSTEM DESIGN
- PRICE CHALLENGE
- FRIENDLY STAFF, HERE TO HELP **01584 876033**

KEEPING INDUSTRY MOVING

FILTREC
Technical Filtration

HYDRAULIC FILTER CROSS REFERENCE LIST

Contact us on 01584 876033 or email sales@flowfitonline.com to request your printed copy or download catalogue and pricelist in pdf format at www.flowfitonline.com

FILTREC
Technical Filtration

INTERNATIONAL CROSS REFERENCES

This guide offers you the most common brands stocked in the UK. However we also offer on CD a much more comprehensive listing, or you can download the latest cross reference at www.flowfitonline.com.

MANUFACTURER INDEX

	PAGE
ARGO	1
BALDWIN	1
BOSCH	1
BRUENINGHAUS HYD	2
COOPERS	2
DONALDSON	2
EPPENSTEINER	2
FAIREY ARLON	4
FAWCETT	12
FILTERSOFT	14
FINN FILTER	14
FLEETGUARD	14
FLOW EZY	16
HYCON	18
HYDAC	18
INTERNORMEN	19
MAHLE	24
MANN+HUMMEL	32
MP FILTRI	35
NORMAN	37
OMT	37
PALL	38
PARKER	43
PTI	48
REGEL TECHNIK	49
SCHROEDER	49
SEPARATION TECHNOLOGIES	52
SOFIMA HYDRAULICS	56
SOFRALUB	61
STAUFF	61
TAISEI KOGYO	65
UCC	66
UFI	66
VICKERS	67
ZINGA	68

PLEASE ASK FOR A PRICE LIST IF NOT ATTACHED

THE WORLD'S LEADING REPLACEMENT HYDRAULIC FILTER MANUFACTURERS

NEW PRODUCTS

CONTENTS

SECTION NP1 FLOWFIT SINGLE AND DOUBLE ACTING HYDRAULIC POWER PACKS

NP1A FLOWFIT SINGLE AND DOUBLE ACTING HYDRAULIC POWER PACKS — PAGE NP1

FLOWFIT 12VDC SINGLE ACTING HYDRAULIC POWER PACKS....NP3
FLOWFIT 12VDC DOUBLE ACTING, NG6 (CETOP 3) SOLENOID VALVE POWER PACKS....NP6
FLOWFIT 12VDC DOUBLE ACTING, DOUBLE NG6 (CETOP 3) SOLENOID VALVE POWER PACKS....NP9
FLOWFIT 24VDC SINGLE ACTING HYDRAULIC POWER PACKS....NP12
FLOWFIT 24VDC DOUBLE ACTING, NG6 (CETOP 3) SOLENOID VALVE POWER PACKS....NP15
FLOWFIT 24VDC DOUBLE ACTING, DOUBLE NG6 (CETOP 3) SOLENOID VALVE POWER PACKS....NP18
FLOWFIT POWER PACK ACCESSORIES....NP21

SECTION NP2 FLOWFIT MOBILE ENGINE DRIVEN HYDRAULIC POWER UNITS ON WHEELS

NP2A FLOWFIT MOBILE ENGINE DRIVEN HYDRAULIC POWER UNITS ON WHEELS — PAGE NP25

FLOWFIT MOBILE ENGINE DRIVEN HYDRAULIC POWER UNITS ON WHEELS....NP25

SECTION NP3 FLOWFIT CETOP 3 VALVES

NP3A FLOWFIT CETOP 3 VALVES — PAGE NP32

FLOWFIT CETOP 3 NG6 SOLENOID DIRECTIONAL CONTROL VALVES....NP32
FLOWFIT CETOP 3 NG6 MODULAR RELIEF VALVE....NP36
FLOWFIT CETOP 3 NG6 MODULAR REDUCING VALVE....NP38
FLOWFIT CETOP 3 NG6 MODULAR CHECK VALVE....NP40
FLOWFIT CETOP 3 NG6 MODULAR PILOT OPERATED CHECK VALVE....NP42
FLOWFIT CETOP 3 NG6 MODULAR FLOW CONTROL VALVE WITH CHECK....NP44
FLOWFIT CETOP 3 NG6 MODULAR COUNTER BALANCE VALVE....NP46
FLOWFIT CETOP 3 NG6 STEEL PARALLEL CIRCUIT MANIFOLD....NP48
FLOWFIT CETOP 3 NG6 STEEL PARALLEL CIRCUIT MANIFOLD WITH RELIEF VALVE....NP50
FLOWFIT CETOP 3 NG6 STEEL SUBPLATE WITH SIDE PORTS....NP52
FLOWFIT CETOP 3 NG6 STEEL SUBPLATE WITH BASE PORTS....NP53
FLOWFIT CETOP 3 NG6 STEEL COVER PLATE....NP54

SECTION NP4 FLOWFIT CETOP 5 VALVES

NP4A FLOWFIT CETOP 5 VALVES — PAGE NP56

FLOWFIT CETOP 5 NG10 SOLENOID DIRECTIONAL CONTROL VALVES....NP56
FLOWFIT CETOP 5 NG10 MODULAR RELIEF VALVE....NP60
FLOWFIT CETOP 5 NG10 MODULAR REDUCING VALVE....NP62
FLOWFIT CETOP 5 NG10 MODULAR CHECK VALVE....NP64
FLOWFIT CETOP 5 NG10 MODULAR PILOT OPERATED CHECK VALVE....NP66
FLOWFIT CETOP 5 NG10 MODULAR FLOW CONTROL VALVE....NP68
FLOWFIT CETOP 5 NG10 STEEL PARALLEL CIRCUIT MANIFOLD....NP70
FLOWFIT CETOP 5 NG10 STEEL PARALLEL CIRCUIT MANIFOLD WITH RELIEF VALVE....NP72
FLOWFIT CETOP 5 NG10 STEEL SUBPLATE WITH SIDE PORTS....NP74
FLOWFIT CETOP 5 NG10 STEEL SUBPLATE WITH BASE PORTS....NP75
FLOWFIT CETOP 5 NG10 STEEL COVER PLATE....NP76

SECTION NP5 FLOWFIT SOLENOID DIVERTER VALVES

NP5A FLOWFIT SOLENOID DIVERTER VALVES — PAGE NP78

FLOWFIT SDV3 - 3 WAY SOLENOID DIVERTERS....NP78
FLOWFIT SDV06 - 6 WAY SOLENOID DIVERTERS....NP79
FLOWFIT SDV10 - 6 WAY SOLENOID DIVERTERS....NP81
FLOWFIT DIVERTER VALVE HANDLEVER MICROSWITCH KIT....NP82

SECTION NP6 FLOWFIT HYDRAULIC QUICK RELEASE COUPLINGS

NP6A FLOWFIT HYDRAULIC QUICK RELEASE COUPLINGS — PAGE NP84

FLOWFIT HYDRAULIC ISO A QUICK RELEASE COUPLINGS MALE & FEMALE ENDS....NP84
FLOWFIT HYDRAULIC FLAT FACE QUICK RELEASE COUPLINGS MALE & FEMALE ENDS....NP87
FLOWFIT HYDRAULIC TRAILER BRAKE QUICK RELEASE COUPLINGS....NP90

SECTION NP7 HYDRAULIC CARTRIDGE VALVES

NP7A HYDRAULIC CARTRIDGE VALVES — PAGE NP94

SINGLE OVERCENTRE VALVE FOR CLOSED CENTRE, TYPE A....NP94
DOUBLE OVERCENTRE VALVE FLANGEABLE, CLOSED CENTRE....NP95
SINGLE OVERCENTRE VALVE FLANGEABLE, CLOSED CENTRE....NP96
DOUBLE OVERCENTRE VALVE FLANGEABLE, CLOSED CENTRE....NP97
20 RELIEF VALVE CARTRIDGE....NP98
35 RELIEF VALVE CARTRIDGE....NP99
80 RELIEF VALVE CARTRIDGE....NP100
120 RELIEF VALVE CARTRIDGE....NP101
IN LINE MOUNTING RELIEF VALVE....NP102
IN LINE MOUNTING RELIEF VALVE....NP103
IN LINE MOUNTING RELIEF VALVE....NP104
PRESSURE REDUCING VALVE, DIRECT ACTING POPPET....NP105
DIRECT ACTING REDUCING VALVE WITH CHECK VALVE....NP106
COMPACT DOUBLE PILOT OPERATED CHECK VALVE....NP107
MALE CHECK VALVES....NP108
BIDIRECTIONAL CHECK VALVE....NP109
DIN ADJUSTABLE HOSE BURST VALVE....NP110
VALVE FOR DRILL....NP111
REGENERATIVE VALVE....NP112
MANUAL EMERGENCY VALVE....NP113
DUAL CROSS RELIEF VALVE WITH ANTI-CAVITATION AND SINGLE ADJUSTMENT....NP114
3 PORT FLOW CONTROL VALVE EXCESS TO TANK FLANGEABLE ON DANFOSS MOTORS OMS....NP115
BRAKE UNCLAMPING VALVE, FLANGEABLE TO DANFOSS MOTORS OMP/OMR....NP116
BRAKE UNCLAMPING VALVE, FLANGEABLE TO DANFOSS MOTORS OMS....NP117
DUAL CROSS RELIEF VALVE FLANGEABLE ON DANFOSS MOTORS OMP/OMR BY SCREWS....NP118
MECHANICAL DRIVE END STROKE VALVE, NORMALLY CLOSED....NP119
GAUGE ISOLATOR — IN LINE AND 90˚ TYPE....NP120
MECHANICAL DRIVE END STROKE VALVE, NORMALLY CLOSED....NP121

SECTION NP8 MANUFACTURING OF HYDRAULIC CYLINDERS

NP8A MANUFACTURING OF HYDRAULIC CYLINDERS — PAGE NP124

SERIES 200 - DOUBLE ACTING HYDRAULIC CYLINDER....NP124

CONTENTS

ISSUE 13 • 2014

SECTION 1 HYDRAULIC POWER UNITS

1A FLOWFIT HYDRAULIC POWERUNITS — PAGE 13

UP100 HYDRAULIC POWER PACKS 14
UP100 POWERUNIT BUILD YOUR OWN 15
UP100 P+T HYDRAULIC CIRCUIT POWER PACKS 18
UP100 SINGLE ACTING HYDRAULIC CIRCUIT POWER PACKS 20
UP100 DOUBLE ACTING HYDRAULIC CIRCUIT POWER PACKS 24
UP100 12VDC AND 24VDC INSTALLATION AND DRAWING DETAILS 27
UP100 110VAC AND 240VAC INSTALLATION AND DRAWING DETAILS 29
UP100 415V AC INSTALLATION AND DRAWING DETAILS 32
HF500 250 BAR INDUSTRIAL POWER PACKS 35
HF500 INSTALLATION AND DRAWING DETAILS 38
HF600 350 BAR VARIABLE FLOW HIGH PRESSURE POWER PACKS 39
HF600 INSTALLATION AND DRAWING DETAILS 41
UP50 MINI-FLOW HYDRAULIC POWER PACK 42
ET-ELECTRIC DC MOTOR PUMP SET 44
HF800 HONDA PETROL ENGINE DRIVEN POWER PACK 45
HF700 LONCIN PETROL ENGINE DRIVEN POWER PACK 47
HF900 HATZ DIESEL ENGINE DRIVEN POWER PACK 49
CUSTOM BUILT POWER PACK FORM 51

1B MOTOR PUMP SETS 240V & 415V — PAGE 53

HYDRAULIC MOTOR PUMP SETS 240V AND 415V 54

SECTION 2 PETROL AND DIESEL ENGINES AND POWER PACKS

2A LONCIN 4 STROKE PETROL ENGINES — PAGE 55

LONCIN 4 STROKE PETROL ENGINES 56

2B HATZ DIESEL ENGINES — PAGE 57

HATZ 1B20 4.2HP DIESEL ENGINE WITH 12 VOLT START 58
HATZ 1B20 4.2HP DIESEL ENGINE WITH RECOIL START 58
HATZ 1B30 6.3HP 4.6 KW DIESEL ENGINE WITH RECOIL START 58
HATZ 1B30 6.3HP DIESEL ENGINE WITH 12 VOLT START 59
HATZ 1B40 9.2HP DIESEL ENGINE WITH 12 VOLT START 59
HATZ 1B40 9.2HP DIESEL ENGINE WITH RECOIL START 59
HATZ 1D50Z 10.2HP DIESEL ENGINE WITH 12 VOLT START 60
HATZ 1D50Z 10.2HP DIESEL ENGINE WITH HANDLE START 60
HATZ 1D81Z 13.7HP DIESEL ENGINE WITH 12 VOLT START 60
HATZ 1D81Z 13.7HP DIESEL ENGINE WITH HANDLE START 61
HATZ 2G40 20HP DIESEL ENGINE WITH 12 VOLT START 61
HATZ 2L41C 33.2 HP DIESEL ENGINE WITH 12 VOLT START 61
HATZ 3L41C 49.9 HP DIESEL ENGINE WITH 12 VOLT START 62
HATZ 4L41C 66.4 HP DIESEL ENGINE WITH 12 VOLT START 62

2C PETROL ENGINE DRIVEN HYDRAULIC GEAR PUMP SETS — PAGE 63

HONDA 5.3 HP PETROL ENGINE DRIVEN HYDRAULIC GEAR PUMP 64
HONDA 9 HP PETROL ENGINE DRIVEN HYDRAULIC GEAR PUMP 64
HONDA 13 HP PETROL ENGINE DRIVEN HYDRAULIC GEAR PUMP 64
HONDA 20 HP PETROL ENGINE DRIVEN HYDRAULIC GEAR PUMP 64
LONCIN 5.5 HP PETROL ENGINE DRIVEN HYDRAULIC GEAR PUMP 65
LONCIN 9 HP PETROL ENGINE DRIVEN HYDRAULIC GEAR PUMP 65
LONCIN 13 HP PETROL ENGINE DRIVEN HYDRAULIC GEAR PUMP 65
LONCIN 20 HP PETROL ENGINE DRIVEN HYDRAULIC GEAR PUMP 65

2D PETROL ENGINE DRIVEN HYDRAULIC HI-LOW GEAR PUMP SETS — PAGE 66

HONDA 5.5 HP PETROL ENGINE DRIVEN HYDRAULIC GEAR PUMP HI-LOW 67
LONCIN 5.5 HP PETROL ENGINE DRIVEN HYDRAULIC GEAR PUMP HI-LOW 67
HONDA 9 HP PETROL ENGINE DRIVEN HYDRAULIC GEAR PUMP HI-LOW 68
LONCIN 9 HP PETROL ENGINE DRIVEN HYDRAULIC GEAR PUMP HI-LOW 68
HONDA 13 HP PETROL ENGINE DRIVEN HYDRAULIC GEAR PUMP HI-LOW 69
LONCIN 13 HP PETROL ENGINE DRIVEN HYDRAULIC GEAR PUMP HI-LOW 69
HONDA 20 HP PETROL ENGINE DRIVEN HYDRAULIC GEAR PUMP HI-LOW 69

SECTION 3 HYDRAULIC VALVES

3A HYDRAULIC CONTROL VALVES — PAGE 70

MONOBLOCK DIRECTIONAL CONTROL VALVES 71
SLICE DIRECTIONAL CONTROL VALVES 73
HANDLEVERS 76
SPOOLS – ADDITIONS FOR VALVES 76
VALVE CONTROL KITS – ADDITIONS FOR VALVES 76
SOLENOID DIVERTER VALVES 3 WAY AND 6 WAY 79
LEVER OPERATED DIVERTER VALVES 79

3B HYDRAULIC HOSE-REEL VALVE — PAGE 80

HYDRAULIC HOSE-REEL VALVE LEVER OPERATED C/W FLOW CONTROL 81
HYDRAULIC HOSE-REEL VALVE WITHOUT FLOW CONTROL 82

3C ROTARY HYDRAULIC OPERATED LEVER VALVES — PAGE 83

ROTARY HYDRAULIC OPERATED LEVER VALVES 83

3D MONOBLOCK CONTROL VALVE C/W FLOW CONTROL — PAGE 87

MONOBLOCK CONTROL VALVE C/W FLOW CONTROL 87

3E HYDRAULIC CETOP VALVES — PAGE 89

KOMPASS DIRECTIONAL CONTROL VALVES 90
KOMPASS HAND OPERATED DIRECTIONAL CONTROL VALVES 91
KOMPASS SUBPLATES FOR CETOP VALVES 91
KOMPASS MANIFOLDS FOR CETOP VALVES 92
KOMPASS MODULAR VALVES CETOP 3, 5, 7 AND 8 96
KOMPASS RELIEF VALVES INLINE AND SUBPLATE MOUNTED 99
KOMPASS PRESSURE REDUCING VALVES INLINE AND SUBPLATE MOUNTED 100
KOMPASS SEQUENCE, COUNTER BALANCE & UNLOADING INLINE AND SUBPLATE MOUNTED 100
FLOWFIT 2 WAY CARTRIDGE ELECTRIC VALVES 100
ELECTRO-HYDRAULIC PROPORTIONAL VALVES 101

3F HYDRAULIC CARTRIDGE VALVES — PAGE 102

DOUBLE PILOT OPERATED CHECK VALVES 103
SINGLE PILOT OPERATED CHECK VALVES 105
OVERCENTRE VALVES 107
RELIEF VALVES 109
DUAL CROSS RELIEF VALVES 112
CHECK VALVES 115
HOSE BURST VALVES 115
FLOW CONTROL VALVES 116
2 WAY FLOW DIVIDERS 119
SEQUENCE VALVES 120
TWO PUMP "HI-LOW" UNLOADING VALVES 121
HIGH PRESSURE BALL VALVES 122
DIVERTER VALVES 123
END STROKE VALVES 125
ROTATING COUPLINGS 126
PLOUGH OVERTURNING VALVES 127

SECTION 4 FLOWFIT HYDRAULIC MOTORS

4A FLOWFIT HYDRAULIC MOTORS — PAGE 129

HYDRAULIC MOTOR SERIES FFPMM 131
HYDRAULIC MOTOR PRICE LIST – BUILD YOUR OWN 138
HYDRAULIC MOTOR PRICE LIST – COMPLETE 138
HYDRAULIC MOTOR SERIES FFPM 139
HYDRAULIC MOTOR PRICE LIST – BUILD YOUR OWN 148
HYDRAULIC MOTOR PRICE LIST – COMPLETE 148
HYDRAULIC MOTOR SERIES FFPRM 150
HYDRAULIC MOTOR PRICELIST - BUILD YOUR OWN 159
HYDRAULIC MOTOR PRICELIST - COMPLETE 159
HYDRAULIC MOTOR SERIES FFPMH 161
HYDRAULIC MOTORPRICE LIST - BUILD YOUR OWN 168
HYDRAULIC MOTORPRICE LIST - COMPLETE 168
HYDRAULIC MOTOR SERIES FFPMS 169
HYDRAULIC MOTOR PRICE LIST - BUILD YOUR OWN 177
HYDRAULIC MOTOR PRICE LIST - COMPLETE 177
HYDRAULIC MOTOR SERIES FFPMSY 179
HYDRAULIC MOTOR SERIES FFPMT 184
HYDRAULIC MOTOR PRICE LIST - BUILD YOUR OWN 191
HYDRAULIC MOTOR PRICE LIST - COMPLETE 192
HYDRAULIC MOTOR SERIES FFPMV 193
HYDRAULIC MOTOR PRICE LIST - BUILD YOUR OWN 199
HYDRAULIC MOTOR PRICE LIST - COMPLETE 199
HYDRAULIC MOTOR CALCULATIONS 200

4B M&S HYDRAULIC MOTORS — PAGE 201

EPMM MOTOR 202
EPM MOTOR 202
EPRM MOTOR 203
EPMS MOTOR 203
EPMT MOTOR 204
EPMV MOTOR 204
ELB BRAKES 205
HKU & HKUS STEERING UNITS 205

4C GEAR MOTORS — PAGE 209

FEATURES 210
TECHNICAL INFORMATION 210
MOTORS GROUP 2 • STANDARD 211
MOTORS GROUP 2 • SAE A, SAE A-OR 212
MOTORS GROUP 2 • B80C, B50C 213
MOTORS GROUP 2 • E52C 214
MOTORS GROUP 2 • SUPP.STND 215
MOTORS GROUP 2 • OPTIONAL 216
MOTORS GROUP 2 • AVAILABLE SHAFTS 218
MOTORS GROUP 2 • CONNECTIONS FOR D-S MOTORS 219
MOTORS GROUP 2 • CONNECTIONS FOR R MOTORS 220
MOTORS GROUP 3 • STANDARD 221
MOTORS GROUP 3 • SAE B, SAE B-OR 222
MOTORS GROUP 3 • OPTIONAL 223
MOTORS GROUP 3 • AVAILABLE SHAFTS 224
MOTORS GROUP 3 • CONNECTIONS FOR R MOTORS 225
GROUP 1 GEAR PUMPS + GEAR MOTORS PRICE LIST 226
GROUP 2 GEAR PUMPS + GEAR MOTORS PRICE LIST 226
GROUP 3 GEAR PUMPS + GEAR MOTORS PRICE LIST 226

SECTION 5 FLOWFIT HYDRAULIC PUMPS SECTION

5A GEAR PUMPS — PAGE 227

FEATURES 228
TECHNICAL INFORMATION 229
PUMPS GROUP 1 • PERFORMANCE DATA 231
PUMPS GROUP 2 • PERFORMANCE DATA 233
PUMPS GROUP 3 • PERFORMANCE DATA 235
PUMPS GROUP 1 • STANDARD 237
PUMPS GROUP 1 • SAE AA 239
PUMPS GROUP 1 • MC32 241
PUMPS GROUP 1 • E 32 BX 243
PUMPS GROUP 1 • E 32 CX 244
PUMPS GROUP 1 • PORT CONNECTIONS 247
PUMPS GROUP 1 • OPTIONAL 248
PUMPS GROUP 2 • STANDARD 249
PUMPS GROUP 2 • SAE A, SAE A-OR 253
PUMPS GROUP 2 • B80C 257
PUMPS GROUP 2 • B50C 259
PUMPS GROUP 2 • E52C 261
PUMPS GROUP 2 • PRKS 400 D 263
PUMPS GROUP 2 • SAE A 14* (Z=10), SAE A 14** (Z=11), ... 265
PUMPS GROUP 2 • SUPP.STND 267
PUMPS GROUP 2 • PORT CONNECTIONS 269
PUMPS GROUP 2 • OPTIONAL 270
PUMPS GROUP 3 • STANDARD 273
PUMPS GROUP 3 • SAE B, SAE B-OR 277
PUMPS GROUP 3 • ZFC 281
PUMPS GROUP 3 • PORT CONNECTIONS 283
PUMPS GROUP 3 • OPTIONAL 284
GROUP 1 GEAR PUMPS + GEAR MOTORS PRICE LIST 285
GROUP 2 GEAR PUMPS + GEAR MOTORS PRICE LIST 285
GROUP 3 GEAR PUMPS + GEAR MOTORS PRICE LIST 285

5B MULTIPLE GEAR PUMPS — PAGE 286

TECHNICAL FEATURES 287
DESIGNATION 288
GROUP 1 + GROUP 1 289
GROUP 2 + GROUP 1 291
GROUP 2 + GROUP 2 294
GROUP 3 + GROUP 1 296
GROUP 3 + GROUP 2 298
GROUP 3 + GROUP 3 300
GROUP 1 GEAR PUMPS + GEAR MOTORS PRICE LIST 301
GROUP 2 GEAR PUMPS + GEAR MOTORS PRICE LIST 301
GROUP 3 GEAR PUMPS + GEAR MOTORS PRICE LIST 301

5C PUMPS AND MOTORS ELBOW CONNECTORS — PAGE 302

ELBOW CONNECTORS FOR PUMP PORT CONNECTIONS TYPE 'T' 303
ELBOW CONNECTORS FOR PUMP PORT CONNECTIONS TYPE 'N' 303

5D KOMPASS PUMPS — PAGE 304

KOMPASS PUMPS 304

5E PUMP BEARING SUPPORTS — PAGE 306

GROUP 1 BEARING SUPPORT 307
GROUP 2 BEARING SUPPORT 307
GROUP 2 BEARING SUPPORT REINFORCED 308
GROUP 2 BEARING SUPPORT REINFORCED 308
GROUP 3 BEARING SUPPORT REINFORCED 309
GROUP 3 BEARING SUPPORT 309
GROUP 3 BEARING SUPPORT SAE A 310
GROUP 3 BEARING SUPPORT SAE B 2 BOLT 310
GROUP 3.5 BEARING SUPPORT 311
GROUP 2 BEARING SUPPORT BOSCH 311
GROUP 3 BEARING SUPPORT BOSCH 312
GROUP 2 BEARING SUPPORT BOSCH 312
GROUP 2 BEARING SUPPORT 313
GROUP 4 BEARING SUPPORT 314
FLANGES FOR GROUP 4 BEARING SUPPORTS 315
GROUP 3 CAST IRON BEARING SUPPORT 316

5F HYDRAULIC HANDPUMPS — PAGE 318

PMP 20 S INLINE HANDPUMP 319
PMO 50 S INLINE HANDPUMP 320
PMO 70 S INLINE HANDPUMP 321
PMP 20 BYB-S INLINE HANDPUMP 322
PMO 50 BYB-S INLINE HANDPUMP 323
PMO 70 BYB-S INLINE HANDPUMP 324
PM 6-12-25-45 BYB-S TANK MOUNTED HANDPUMP 325
PMD 6-12-25-45 BYB-S TANK MOUNTED HANDPUMP 326
PMDVB 6-12-25-45 BYAB-S TANK MOUNTED HANDPUMP 327
PMP 25 E INLINE HANDPUMP 328
PPSE 15 BYB INLINE HANDPUMP 328
STRAIGHT LEVERS FOR HAND PUMPS 329
FOLD LEVERS FOR HAND PUMPS 329
STEEL OIL TANKS 330

5G SINGLE ACTING HANDPUMP ASSEMBLIES — PAGE 331

6CM3 SINGLE ACTING HANDPUMP ASSEMBLIES....332
12CM3 SINGLE ACTING HANDPUMP ASSEMBLIES....334
25CM3 SINGLE ACTING HANDPUMP ASSEMBLIES....336
45CM3 SINGLE ACTING HANDPUMP ASSEMBLIES....338

5H DOUBLE ACTING HANDPUMP ASSEMBLIES — PAGE 340

6CM3 DOUBLE ACTING HANDPUMP ASSEMBLIES....341
12CM3 DOUBLE ACTING HANDPUMP ASSEMBLIES....343
25CM3 DOUBLE ACTING HANDPUMP ASSEMBLIES....345
45CM3 DOUBLE ACTING HANDPUMP ASSEMBLIES....347

5I HANDPUMPS AND POWERPACK TRAILER KITS — PAGE 349

SINGLE ACTING HANDPUMP AND CYLINDER KITS....350
DOUBLE ACTING HANDPUMP AND CYLINDER KITS....355
12VDC SINGLE ACTING HYDRAULIC TRAILER KITS....360
24VDC SINGLE ACTING HYDRAULIC TRAILER KITS....365

5J HYDRAULIC TWO STAGE HI-LO GEAR PUMPS — PAGE 370

HYDRAULIC GEAR PUMP MODEL GP-CBN TECHNICAL DATA....371
HYDRAULIC GEAR PUMP MODEL GP-CBN ORDERING INFORMATION....371
HYDRAULIC GEAR PUMP MODEL GP-CBN INSTALLATION DATA....372

SECTION 6 HYDRAULIC CYLINDERS

6A MANUFACTURING OF HYDRAULIC CYLINDERS — PAGE 373

SERIES 100 - SINGLE ACTING HYDRAULIC CYLINDER....374
SERIES 200 - DOUBLE ACTING HYDRAULIC CYLINDER....376
SERIES 300 - DOUBLE ACTING HYDRAULIC CYLINDER (NO ENDS)....378
SERIES 400 - DOUBLE ACTING HYDRAULIC CYLINDER....380
SERIES 500 - DOUBLE ACTING HYDRAULIC CYLINDER (FRONT FLANGE)....382
SERIES 590 - TURN-OVER PLOUGH CYLINDER....383
SERIES 600 - STANDARD HYDRAULIC TOP LINK....384
SERIES 610 - HYDRAULIC TOP LINK (FIXED)....385
SERIES 620 - HYDRAULIC TOP LINK (RAPID HOOK)....386
SERIES 630 - HYDRAULIC TOP LINK (RAPID HOOK)....387
SERIES 640 - HYDRAULIC TOP LINK (ADJUSTABLE BALL JOINT)....388
SERIES 650 - HYDRAULIC LEVELLING ARM....389
SERIES 700 - BRAKE CYLINDER (SINGLE ACTING)....390
SERIES 710 - BRAKE CYLINDER (SINGLE ACTING)....390
SERIES 800 - HYDRAULIC CRUTCH (SINGLE ACTING)....391
ATTACHMENTS....392
COMPONENTS....402
HYDRAULIC VALVES....411
OIL SEALS KITS....412

SECTION 7 LOG SPLITTER KITS

7A FLOWFIT LOG SPLITTER KITS — PAGE 414

LOG SPLITTER KITS....414
5.5 HP LOGSPLITTER KIT 7.7 TON FORCE PT NO ZZ001080....415
9 HP LOGSPLITTER KIT 10 TON FORCE PT NO ZZ001081....415
13 HP LOGSPLITTER KIT 15.7 TON FORCE PT NO ZZ001082....415
OPTIONAL EXTRAS NOT INCLUDED IN BASIC KIT....416

SECTION 8 BELL HOUSINGS AND DRIVE COUPLINGS

8A BELL HOUSINGS AND DRIVE COUPLINGS FOR ELECTRIC MOTORS — PAGE 417

FLOWFIT BELL HOUSINGS....418
FLOWFIT DRIVE COUPLINGS....419

8B PETROL + DIESEL ENGINE BELL HOUSING AND DRIVE COUPLING KITS — PAGE 430

PETROL ENGINE BELL HOUSING AND DRIVE COUPLING KITS....431
DIESEL ENGINE BELL HOUSING AND DRIVE COUPLING KITS....437

SECTION 9 CLUTCHES AND GEARBOXES

9A MECHANICAL CLUTCHES — PAGE 441

SERIES 30100 MECHANICAL CLUTCH GROUP 1 AND GROUP 2 • 30KW....442
SERIES 30300 MECHANICAL CLUTCH GROUP 2 AND GROUP 3 • 40KW....443
SERIES 30500 MECHANICAL CLUTCH GROUP 3.5 AND GROUP 4 • 60KW....444
FLANGES TO SUIT 30500 SERIES GROUP 3.5 AND GROUP 4....445

9B REVERSIBLE HYDRAULIC MECHANICAL CLUTCH AND PUMP ASSEMBLIES — PAGE 446

GROUP 1
REVERSIBLE HYDRAULIC MECHANICAL CLUTCH AND PUMP ASSEMBLY 9 L/MIN....447
REVERSIBLE HYDRAULIC MECHANICAL CLUTCH AND PUMP ASSEMBLY 11.34 L/MIN....447
REVERSIBLE HYDRAULIC MECHANICAL CLUTCH AND PUMP ASSEMBLY 14.04 L/MIN....448
REVERSIBLE HYDRAULIC MECHANICAL CLUTCH AND PUMP ASSEMBLY 17.64 L/MIN....448
REVERSIBLE HYDRAULIC MECHANICAL CLUTCH AND PUMP ASSEMBLY 19.8 L/MIN....448
REVERSIBLE HYDRAULIC MECHANICAL CLUTCH AND PUMP ASSEMBLY 25.2 L/MIN....448
GROUP 2
REVERSIBLE HYDRAULIC MECHANICAL CLUTCH AND PUMP ASSEMBLY 28.8 L/MIN....449
REVERSIBLE HYDRAULIC MECHANICAL CLUTCH AND PUMP ASSEMBLY 34.2 L/MIN....449
REVERSIBLE HYDRAULIC MECHANICAL CLUTCH AND PUMP ASSEMBLY 36.9 L/MIN....449
REVERSIBLE HYDRAULIC MECHANICAL CLUTCH AND PUMP ASSEMBLY 46.8 L/MIN....449
GROUP 3
REVERSIBLE HYDRAULIC MECHANICAL CLUTCH AND PUMP ASSEMBLY 52.2 L/MIN....450
REVERSIBLE HYDRAULIC MECHANICAL CLUTCH AND PUMP ASSEMBLY 59.4 L/MIN....450
REVERSIBLE HYDRAULIC MECHANICAL CLUTCH AND PUMP ASSEMBLY 64.8 L/MIN....450
REVERSIBLE HYDRAULIC MECHANICAL CLUTCH AND PUMP ASSEMBLY 79.2 L/MIN....450

9C PTO GEARBOXES — PAGE 451

SERIES 60000 PTO GEARBOX PUMP GROUP 2 • 10KW....452
SERIES 70000 PTO GEARBOX PUMP GROUP 3 • 20KW....453
SERIES 70000 PTO GEARBOX WITH THROUGH SHAFTS PUMP GROUP 3 • 20KW....454
SERIES 80000 PTO GEARBOX PUMP GROUP 3.5 • 36KW....454
SERIES MLT 3.5 PTO GEARBOX PUMP GROUP 3.5 • 40KW....456
SERIES 85000 PTO GEARBOX DUAL PUMP GROUP 2 AND/OR GROUP 3 • 35KW....457
SERIES 90000 PTO GEARBOX DUAL PUMP GROUP 3 AND/OR GROUP 3.5 • 45KW....458
SERIES 91000 PTO GEARBOX DUAL PUMP GROUP 4 • 74KW....459
FLANGES TO FIT PTO GEARBOXES 60000-70000-70012-8500....460
FLANGES TO FIT PTO GEARBOXES 80000-90000-91000....461
SERIES 70012 CAST IRON PTO GEARBOX PUMP GROUP 3 • 37KW....462
SERIES 97601 CAST IRON PTO GEARBOX PUMP SAE 'A' + SAE 'B'....463
SERIES 97701 CAST IRON PTO GEARBOX PUMP GROUP 2 + GROUP 3....464

9D HYDRAULIC PTO GEARBOXES AND PUMP ASSEMBLIES — PAGE 465

PTO GEAR BOXES WITH GROUP 2 PUMPS....466
PTO GEAR BOXES WITH GROUP 3 PUMPS....466
CAST IRON PTO GEAR BOXES WITH GROUP 3 PUMPS....467

9E ELECTROMAGNETIC CLUTCHES — PAGE 468

10 DANM ELECTROMAGNETIC CLUTCHES....469
FLANGES FOR 10 DANM ELECTROMAGNETIC CLUTCHES....470
10 DANM ELECTROMAGNETIC CLUTCHES....471
FLANGES FOR 10 DANM ELECTROMAGNETIC CLUTCHES....472
14 DANM ELECTROMAGNETIC CLUTCHES....473
FLANGES FOR 14 DANM ELECTROMAGNETIC CLUTCHES....474
14 DANM ELECTROMAGNETIC CLUTCHES....475
FLANGES FOR 14 DANM ELECTROMAGNETIC CLUTCHES....476
21 DANM ELECTROMAGNETIC CLUTCHES....477
FLANGES FOR 21 DANM ELECTROMAGNETIC CLUTCHES....478
50 DANM ELECTROMAGNETIC CLUTCHES....479
FLANGES FOR 50 DANM ELECTROMAGNETIC CLUTCHES....480

9F ELECTRO MAGNETIC CLUTCH AND PUMP ASSEMBLIES — PAGE 481

12V ELECTRO MAGNETIC CLUTCH AND PUMP ASSEMBLY 12 L/MIN AT 210 BAR.....483
12V ELECTRO MAGNETIC CLUTCH AND PUMP ASSEMBLY 25.5 L/MIN AT 210 BAR.....483
12V ELECTRO MAGNETIC CLUTCH AND PUMP ASSEMBLY 39 L/MIN AT 210 BAR.....483
12V ELECTRO MAGNETIC CLUTCH AND PUMP ASSEMBLY 49.5 L/MIN AT 210 BAR.....483
12V ELECTRO MAGNETIC CLUTCH AND PUMP ASSEMBLY 58.5 L/MIN AT 210 BAR.....484
12V ELECTRO MAGNETIC CLUTCH AND PUMP ASSEMBLY 66.9 L/MIN AT 210 BAR.....484
12V ELECTRO MAGNETIC CLUTCH AND PUMP ASSEMBLY 87.9 L/MIN AT 210 BAR.....484
12V ELECTRO MAGNETIC CLUTCH AND PUMP ASSEMBLY 98.7 L/MIN AT 210 BAR.....484
12V ELECTRO MAGNETIC CLUTCH AND PUMP ASSEMBLY 109.2 L/MIN AT 210 BAR....485
24V ELECTRO MAGNETIC CLUTCH AND PUMP ASSEMBLY 12 L/MIN AT 210 BAR.....485
F24V ELECTRO MAGNETIC CLUTCH AND PUMP ASSEMBLY 25.5 L/MIN AT 210 BAR....485
24V ELECTRO MAGNETIC CLUTCH AND PUMP ASSEMBLY 33 L/MIN AT 210 BAR.....485
24V ELECTRO MAGNETIC CLUTCH AND PUMP ASSEMBLY 39 L/MIN AT 210 BAR.....486
24V ELECTRO MAGNETIC CLUTCH AND PUMP ASSEMBLY 49.5 L/MIN AT 210 BAR.....486
24V ELECTRO MAGNETIC CLUTCH AND PUMP ASSEMBLY 58.5 L/MIN AT 210 BAR.....486
24V ELECTRO MAGNETIC CLUTCH AND PUMP ASSEMBLY 66.9 L/MIN AT 210 BAR.....486
24V ELECTRO MAGNETIC CLUTCH AND PUMP ASSEMBLY 87.9 L/MIN AT 210 BAR.....487
24V ELECTRO MAGNETIC CLUTCH AND PUMP ASSEMBLY 98.7 L/MIN AT 210 BAR.....487
24V ELECTRO MAGNETIC CLUTCH AND PUMP ASSEMBLY 109.2 L/MIN AT 210 BAR....487

9G SPEED REDUCTION GEARBOXES — PAGE 488

95000 SERIES ALUMINIUM SPEED REDUCTION GEARBOXES.....489
96000 SERIES ALUMINIUM SPEED REDUCTION GEARBOXES.....491
97500 SERIES CAST IRON SPEED REDUCTION GEARBOXES.....493
97003 CAST IRON SPEED REDUCTION GEARBOX.....495
97001 CAST IRON SPEED REDUCTION GEARBOX.....496
97001/13 – 97001/15 CAST IRON SPEED REDUCTION GEARBOX.....497

SECTION 10 SPLINED COUPLINGS

10A SPLINED COUPLINGS — PAGE 498

SPLINED COUPLINGS SERIES 10000.....499
SPLINED COUPLINGS SERIES 10500.....502
SPLINED COUPLINGS SERIES 13000.....503
SPLINED COUPLINGS SERIES 35000 WITH DIN 5482 AND SAE STANDARDS.....504
SPLINED COUPLINGS SERIES 15000.....505
SPLINED SLEEVES.....506
SPLINED COUPLINGS SERIES 34100.....507
SPLINED HALF COUPLINGS 34200 - 34300 34400-35500.....508
SPLINED HALF COUPLINGS 35550.....509
SPLINED SLEEVES SERIES 10200-10300-10400.....510
SPLINED BARS SERIES 14000.....511
COMPLETE CHAIN TYPE COUPLINGS SERIES 16800.....512
ENGINE HALF COUPLINGS SERIES 16200.....513
GEARBOX HALF-COUPLINGS SERIES 16000.....514
COMPLETE CHAIN TYPE COUPLINGS SERIES 12800.....515
SPLINED HALF-COUPLINGS SERIES 1200 - FLANGE COUPLINGS SERIES 12200.....516
COMPLETE SPLINED COUPLINGS SERIES 11400.....517
HALF-COUPLINGS SERIES 11000 - SLEEVES SERIES 11200.....518

SECTION 11 HYDRAULIC FILTERS

11A FILTRATION — PAGE 519

PRESSURE FILTERS.....521
RETURN FILTERS.....525
TANK TOP RETURN FILTERS.....527
SUCTION FILTERS.....529
SUCTION STRAINERS.....530
DIFFUSERS.....531
FILLER BREATHERS.....531
LEVEL INDICATORS.....535
ELECTRIC LEVEL INDICATORS.....536
ELECTRIC FLOATING LEVEL GAUGES.....536
OIL LEVEL GAUGES.....539
FILTREC SIMPLEX AND DUPLEX INDUSTRIAL FILTERS.....540
SIGHT GLASSES, PLUGS AND BREATHERS.....541

SECTION 12 HYDRAULIC COMPONENTS ACCESSORIES

12A HYDRAULIC COMPONENT ACCESSORIES — PAGE 543

BREATHER PLUGS.....548
MAGNETIC PLUGS.....554
DRAIN FILLING PLUGS PLUGS.....557
VISUAL LEVEL INDICATORS.....560
LEVEL INDICATORS WITH DIPSTICK.....563
VISUAL LEVEL INDICATORS WITH FLOAT SYSTEM.....568
VERTICAL VISUAL LEVEL INDICATORS.....569
FILLING PLUGS.....573
PLUGS ON INCLINED FLANGE.....580

SECTION 13 HYDRAULIC TANKS

13A HYDRAULIC TANKS — PAGE 583

HYDRAULIC STEEL TANKS.....584
HYDRAULIC STAINLESS STEEL TANKS.....584

13B ALUMINIUM OIL TANKS — PAGE 585

HYDRAULIC TANKS.....586

13C HYDRAULIC TANKS COMPLETE WITH ACCESSORIES — PAGE 592

14L, 22L & 39L CAPACITY HYDRAULIC OIL TANK WITH TANK ACCESSORIES.....593
58L & 75L CAPACITY HYDRAULIC OIL TANK WITH TANK ACCESSORIES.....594
100L CAPACITY HYDRAULIC OIL TANK WITH TANK ACCESSORIES.....595
165L CAPACITY HYDRAULIC OIL TANK WITH TANK ACCESSORIES.....595

13D TANK HEATERS — PAGE 596

VR IMMERSION HEATERS.....598
CARTRIDGE SCREWED-IN HEATERS.....599
CARTRIDGE SCREWED-IN HEATERS WITH TEMPERATURE ADJUSTMENT.....600
RHK-TUBE SCREWED-IN HEATERS.....601
RHK-TH-TUBE SCREWED-IN HEATERS WITH TEMPERATURE ADJUSTMENT.....602

SECTION 14 PRESSURE GAUGES

14A PRESSURE GAUGES — PAGE 603

PNEUMATIC SPECIFICATION 40MM BASE ENTRY.....604
PNEUMATIC SPECIFICATION 40MM REAR ENTRY.....604
PNEUMATIC SPECIFICATION 50MM BASE ENTRY.....604
PNEUMATIC SPECIFICATION 50MM REAR ENTRY.....604
HYDRAULIC SPECIFICATION 63MM BASE ENTRY.....605
HYDRAULIC SPECIFICATION 63MM REAR ENTRY.....605
HYDRAULIC SPECIFICATION 100MM BASE ENTRY.....606
HYDRAULIC SPECIFICATION 100MM REAR ENTRY.....606
GAUGE ISOLATOR VALVES.....607
FT290 IN LINE GAUGE ISOLATOR NEEDLE VALVES.....607
FT291 90° ANGLE GAUGE ISOLATOR NEEDLE VALVES.....607
FT292 PUSH-BUTTON GAUGE ISOLATOR VALVES.....607
FT299 PRESSURE GAUGE SWIVEL ADAPTORS - 400 BAR RATED.....607

SECTION 15 HYDRAULIC QUICK RELEASE COUPLINGS

15A HYDRAULIC QUICK RELEASE COUPLINGS — PAGE 608

ISO A QUICK RELEASE COUPLINGS....609
ISO B QUICK RELEASE COUPLINGS....610
FLAT-FACE QUICK RELEASE COUPLINGS....610

SECTION 16 HYDRAULIC ADAPTORS AND BONDED WASHERS

16A HYDRAULIC ADAPTORS — PAGE 611

MALE X MALE ADAPTORS....612
MALE X SWIVEL FEMALE ADAPTORS....616
SWIVEL FEMALE X SWIVEL FEMALE ADAPTORS....617
MALE X FIXED FEMALE & FIXED FEMALE/FEMALE ADAPTORS....617
TEES & CROSS ADAPTORS....618
PLUGS, CAPS & CRIMP NUTS....619
SWEPTS, PUSH-INS, HOSE-TAILS & FERRULES....620
BONDED SEALS....621

SECTION 17 FLUID TRANSFER

17A FLUID TRANSFER — PAGE 622

HF10 FILTRATION UNIT....623
SUPER DELUXE PORTABLE FILTRATION UNIT....623
VISCOMAT OIL TRANSFER PUMPS....624
DC PUMPS VISCOMAT DC....624
HAND OPERATED PUMPS FOR OIL DRUMS....625
CLEAN OIL TRANSFER SYSTEMS 12V....625
CLEAN OIL TRANSFER SYSTEMS 240V....626
DRUM AND TANK TRANSFER UNITS....626
MECHANICAL FLOW METERS....626
SELF 3000 NOZZLES....626

SECTION 18 ELECTRIC MOTORS

18A ELECTRIC MOTORS — PAGE 627

SERIES ALUMINIUM HOUSING SINGLE-PHASE 240V MULTI-MOUNT ASYNCHRONOUS MOTOR-DUAL CAPACITORS....628
WIRING DIAGRAMS....628
OVERALL & INSTALLATION DIMENSIONS....629
TECHNICAL DATA @ 110V/50HZ....630
TECHNICAL DATA @ 230V/50HZ....630
SERIES ALUMINIUM HOUSING THREE-PHASE MULTI-MOUNT ASYNCHRONOUS MOTOR....631
WIRING DIAGRAMS....632
OVERALL & INSTALLATION DIMENSIONS ALUMINIUM HOUSING....633
TECA SERIES IE1 EFFICIENCY MOTORS TECHNICAL DATA (AT 50HZ) ALUMINIUM HOUSING....633
OVERALL & INSTALLATION DIMENSIONS CAST IRON HOUSING....634
IE1 EFFICIENCY MOTORS TECHNICAL DATA CAST IRON HOUSING....635

SECTION 19 FILTREC FILTERS

19A RETURN FILTERS — PAGE 636

FA-1 RETURN LINE SPIN-ON....637
FA-2 TANK TOP RETURN LINE SPIN-ON....643
FCR-7 TANK TOP RETURN LINE....648
FVR-7 IN TANK RETURN LINE....658
FR-1 TANK TOP RETURN LINE....665
FR-8 TANK TOP RETURN LINE....674
FA-4 INLINE PRESSURE AND RETURN SPIN ON....681

19B SUCTION FILTERS — PAGE 687

FA-1 SUCTION SPIN-ON....688
FS-1 SUCTION STRAINERS....694
FS-7 IN TANK MOUNTED SUCTION STRAINERS....699

19C PRESSURE FILTERS — PAGE 705

F100-XD INLINE HIGH PRESSURE MAX 80-100 BAR....706
FD-3 INLINE MEDIUM PRESSURE MAX 100 BAR....715
F160-XD INLINE MEDIUM PRESSURE MAX 160 BAR....721
F280-D1 INLINE HIGH PRESSURE MAX 280 BAR....730
FDM-1 CETOP MOUNTABLE HIGH PRESSURE MAX 315 BAR....740

19D FILTREC ACCESSORIES — PAGE 747

CLOGGING INDICATORS....748
FL SERIES FLUID LEVEL TEMPERATURE GAUGES....760
FB-1 SERIES AIR BREATHER FILTERS....763
FT SERIES FILLER BREATHER FILTERS....767

SECTION 20 GATES

20A HYDRAULIC HOSES — PAGE 772

HYDRAULIC HOSE M6K....772
HYDRAULIC HOSE M5K....773
HYDRAULIC HOSE M4K....774
HYDRAULIC HOSE M3K....775
HYDRAULIC HOSE M3KDL-XTF....776
HYDRAULIC HOSE CM2T....777
HYDRAULIC HOSE TH8....778
HYDRAULIC HOSE TH7....779

20B FITTINGS — PAGE 780

MEGACRIMP®....780

20C MACHINERY — PAGE 815

WORKSHOP MACHINERY....815
MOBILE SERVICE....816
FIELD SERVICE....817
CRIMPING MACHINES....818
CUTTING MACHINES....823
TOOLS....824

SECTION 21 INDEX

INDEX — PAGE 826

FLOWFIT SINGLE AND DOUBLE ACTING HYDRAULIC POWER PACKS

FLOWFIT 12VDC SINGLE ACTING HYDRAULIC POWER PACKS..... NP3
FLOWFIT 12VDC DOUBLE ACTING, NG6 (CETOP 3) SOLENOID VALVE POWER PACKS..... NP6
FLOWFIT 12VDC DOUBLE ACTING, DOUBLE NG6 (CETOP 3) SOLENOID VALVE POWER PACKS..... NP9
FLOWFIT 24VDC SINGLE ACTING HYDRAULIC POWER PACKS..... NP12
FLOWFIT 24VDC DOUBLE ACTING, NG6 (CETOP 3) SOLENOID VALVE POWER PACKS..... NP15
FLOWFIT 24VDC DOUBLE ACTING, DOUBLE NG6 (CETOP 3) SOLENOID VALVE POWER PACKS.... NP18
FLOWFIT ACCESSORIES..... NP21

FLOWFIT®

FLOWFIT

MANUFACTURERS AND SUPPLIERS OF HYDRAULIC COMPONENTS

Flowfit are a leading hydraulic manufacturing company located in England, who export their products worldwide into Europe, Asia, Middle East, Africa and Australasia.

Single acting and double acting 12vdc and 24vdc powerunits suitable for a variety of applications where single acting hydraulic cylinders and double acting hydraulic cylinders need a modular constructed unit designed to lift, hold and lower by gravity or powered in both directions.

Our DC powerunits are compact, lightweight and manufactured with high quality components,

The centre of the hydraulic powerunit is a high quality machined steel block that joins the gear pump to the electric DC motor. The gear pump then delivers flow through a check valve protected with a main relief valve into any combination of directional control valves to suit any type of application such as taillift applications, trailer applications, tipper applications, hand operated lift stackers, scissor lift platforms, aerial platforms, tipper trailers, wheelchair lifts, scissor lifts, dock levellers, lorry cab tilts, mobile sign lifts, mobile mast lifts, boat lifts, pallet movers, dump bodies, aerial platforms, mobile compactors, factory automation, truck hoists, dump trailers, hand operated lift stackers, hoists, winches, compactors, packing systems, barriers and security gates.

FLOWFIT 12VDC SINGLE ACTING HYDRAULIC POWER PACKS

The Flowfit 12VDC Single Acting power pack is ideal for use in the following applications:
Tail Lift
Trailer/Tipper
Hand operated lift stacker
Scissor Lift Platform
Aerial Platform

The Flowfit 12VDC Single Acting power pack is a compact and quiet unit, able to deliver a flow rate of up to 5 litres a minute at 160 bar. The compact design includes a lowering solenoid valve, relief valve and flow controller mounted within the housing and comes complete with a detachable pre-wired 2 button pendant and 4.5 litre plastic tank as standard.

Options available include an 8.0 litre plastic tank for increased capacity on larger systems and a wireless remote, operated by key fob.

The Flowfit 12VDC Single Acting power pack will require a high capacity battery and a suitable in-line fuse for normal operation.

The motor is designed for intermittent use (S3) which is defined as a sequence of identical cycles of 10 minute duration. The cycle comprises a period of on-load (td) operation in which the motor may reach its maximum permitted temperature, followed by an off-load period (tm) of time, insufficient for the motor to return to ambient temperature.

The value of S3 on this motor equates to 7% or 42 seconds of on-load operation in a ten minute period.

PRODUCT REFERENCE	DESCRIPTION	PRICE
ZZ003468	FLOWFIT 12VDC SINGLE ACTING HYDRAULIC POWERPACK, 4.5 LITRE RESERVOIR C/W 2 BUTTON PENDANT. 5 L/MIN @ 160BAR.	£265

PRODUCT REFERENCE	DESCRIPTION	PRICE
ZZ003834	FLOWFIT 12VDC SINGLE ACTING HYDRAULIC POWERPACK, 8.0 LITRE RESERVOIR C/W 2 BUTTON PENDANT. 5 L/MIN @ 160BAR.	£286.20

FLOWFIT 12VDC SINGLE ACTING HYDRAULIC POWER PACKS

TECHNICAL DATA

Flowfit 12VDC Single Acting Hydraulic Powerunit

POWERUNIT PACKAGE to operate a single acting cylinder on any trailer or tipper application, or any single acting application complete with detachable two button pendant.

12VDC powerunit.
2.1cc/rev gear pump.
1.6kw 12VDC electric motor c/w relay and plastic motor cover. 4.5 Litre or 8.0 Litre reservoir c/w drain plug.
Powerpack complete with suction strainer, return oil conveyor and filler breather.
Horizontal mounting.
Max pressure 200 bar.
Relief valve set at 160 bar but adjustable from 40-200 bar as standard.
Max flow 5 l/min.
Adjustable flow control for cylinder decent control.
12VDC let down valve, relief and P line check.
Port size 3/8" BSP.
2 Button detachable pendant on a 4 metre lead.
Suitable for all single acting applications.

WITH MANY ADDED FEATURES SUCH AS FLOW CONTROL ON CYLINDER DECENT, DETACHABLE PENDANTS FOR ADDED SECURITY, REMOVEABLE PLASTIC MOTOR COVER AND A VARIATION ON WHICH RELIEF VALVE SPRING IS FITTED YOU ARE GETTING AN EXCEPTIONALLY GOOD QUALITY PRODUCT AT A VERY COMPETITIVE PRICE.

SINGLE ACTING HYDRAULIC CIRCUIT DIAGRAM

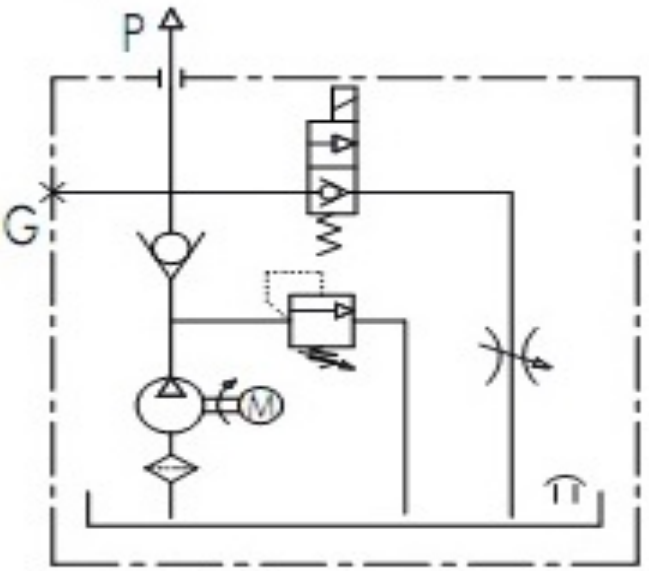

FLOW CURVE DATA

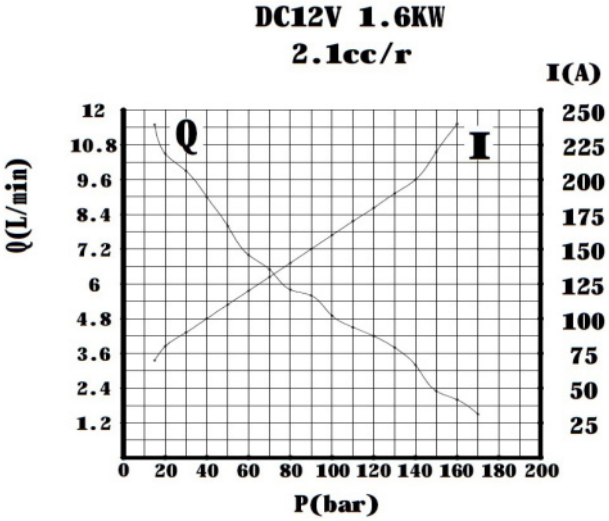

SINGLE ACTING WIRING DIAGRAM

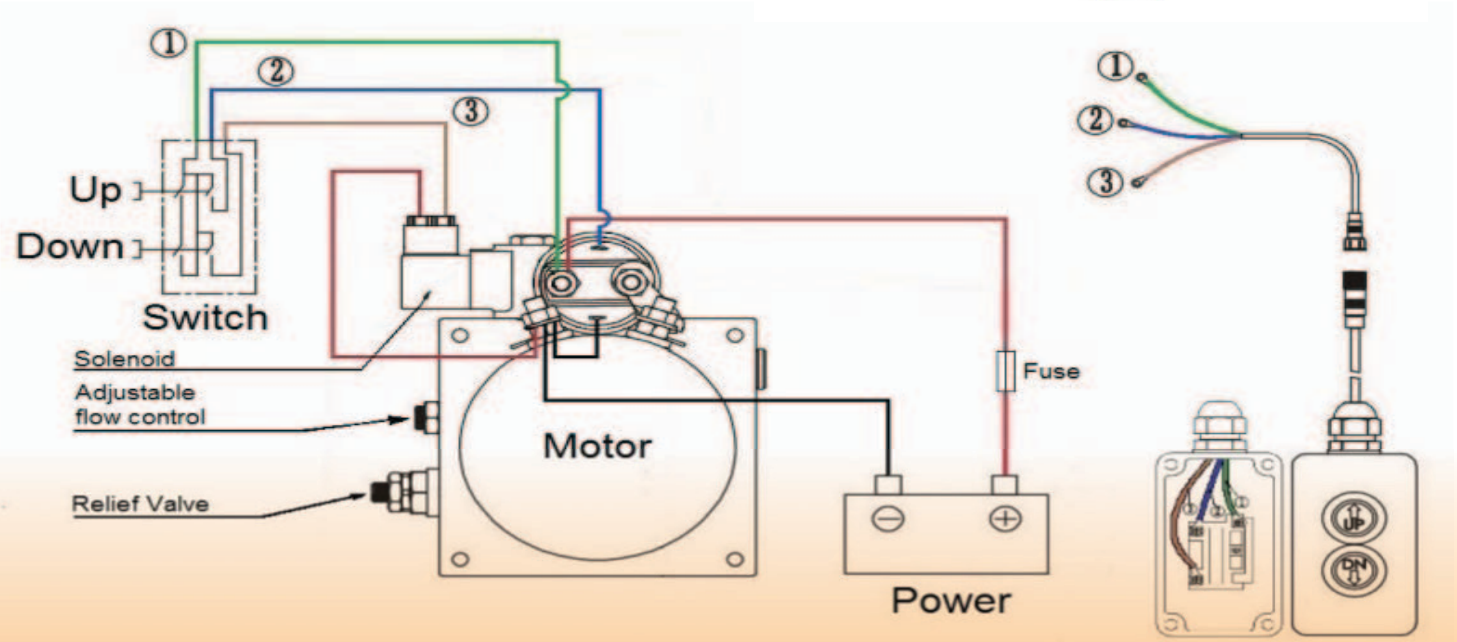

FLOWFIT 12VDC SINGLE ACTING HYDRAULIC POWER PACKS

FLOWFIT®

SINGLE ACTING (WITH REMOTE) WIRING DIAGRAM

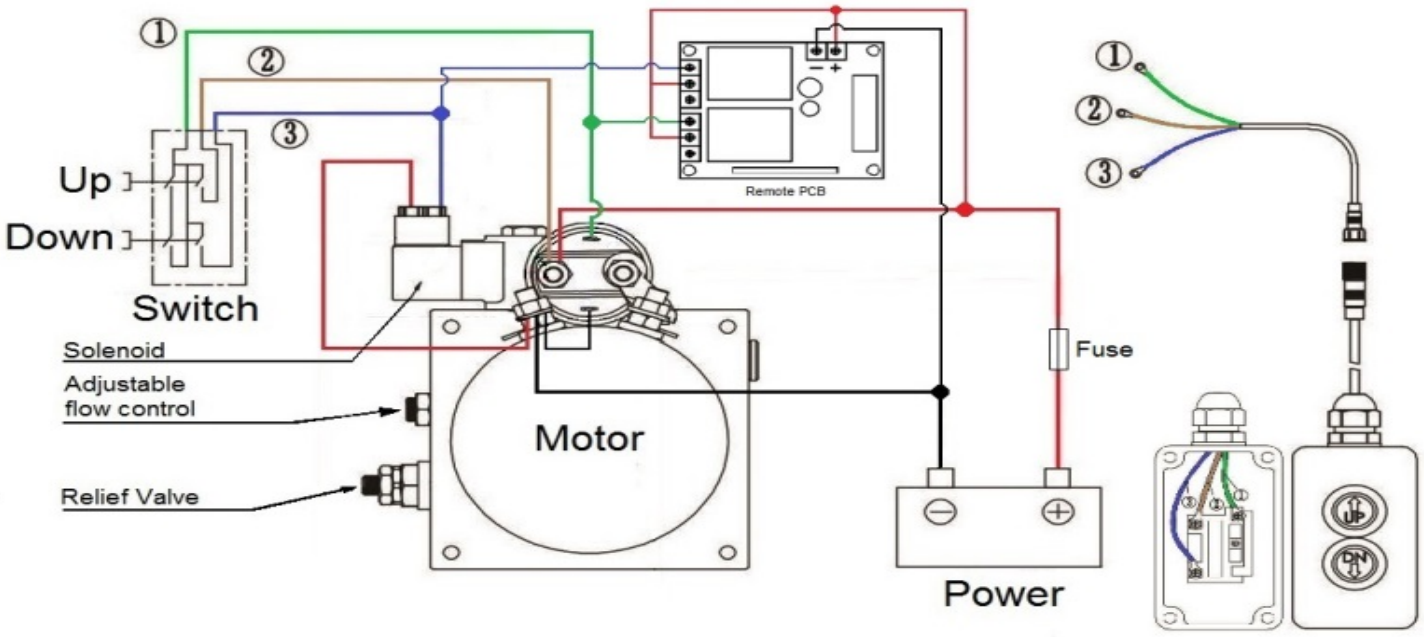

4.5 LITRE POWER PACK DIMENSIONS

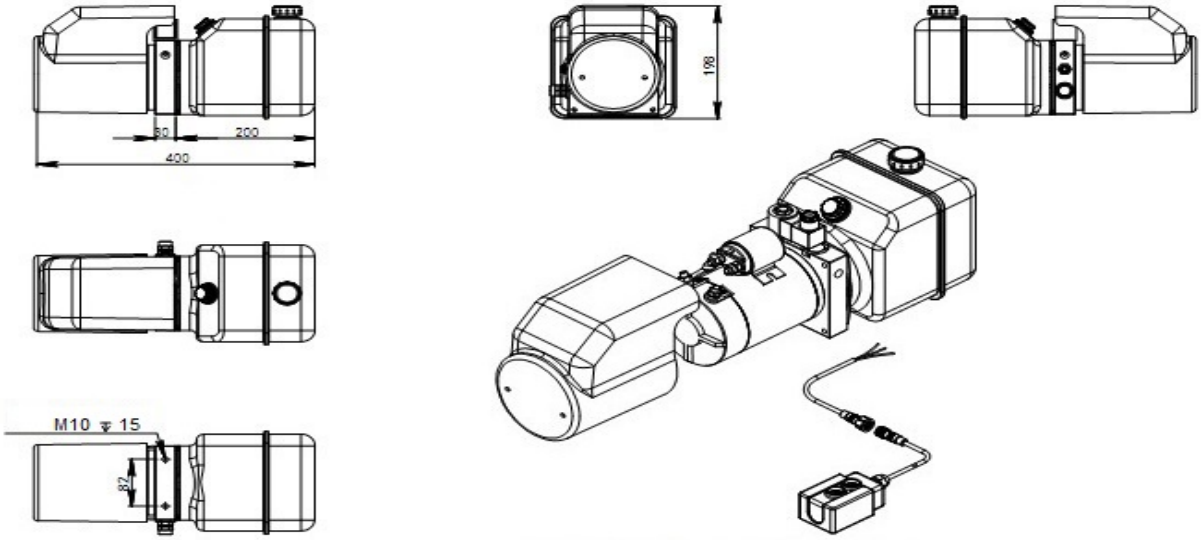

8.0 LITRE POWER PACK DIMENSIONS

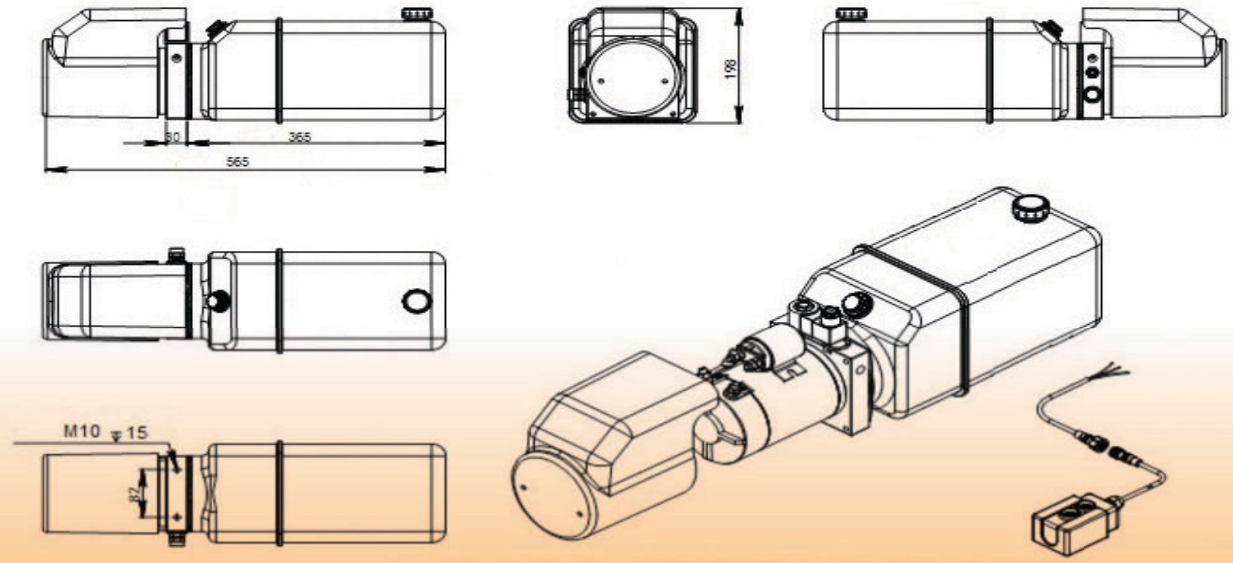

FLOWFIT 12VDC DOUBLE ACTING, NG6 (CETOP 3) SOLENOID VALVE POWER PACKS

The Flowfit 12VDC Double Acting power pack is ideal for use in the following applications:

Tail Lift
Trailer/Tipper
Hand operated lift stacker
Scissor Lift Platform
Aerial Platform
Hoists/Winches
Compactors
Parking Systems/Barriers
Security Gates
Dock Leveler

The Flowfit 12VDC Double Acting power pack is a compact and quiet unit, able to deliver a flow rate of up to 5 litres a minute at 160 bar. The compact design includes a CETOP 3 double acting solenoid valve, relief valve and flow controller mounted within the housing and comes complete with a detachable pre-wired 2 button pendant and 4.5 litre plastic tank as standard.

Options available include an 8.0 litre plastic tank for increased capacity on larger systems.

The Flowfit 12VDC Double Acting power pack will require a high capacity battery and a suitable in-line fuse for normal operation.

The motor is designed for intermittent use (S3) which is defined as a sequence of identical cycles of 10 minute duration. The cycle comprises a period of on-load (td) operation in which the motor may reach its maximum permitted temperature, followed by an off-load period (tm) of time, insufficient for the motor to return to ambient temperature.

The value of S3 on this motor equates to 7% or 42 seconds of on-load operation in a ten minute period.

PRODUCT REFERENCE	DESCRIPTION	PRICE
ZZ004232	FLOWFIT 12VDC DOUBLE ACTING, SINGLE SOLENOID HYDRAULIC POWERPACK, 4.5 LITRE RESERVOIR C/W 2 BUTTON PENDANT. 5 L/MIN @ 160BAR.	£381.60

PRODUCT REFERENCE	DESCRIPTION	PRICE
ZZ004233	FLOWFIT 12VDC DOUBLE ACTING, SINGLE SOLENOID HYDRAULIC POWERPACK, 8.0 LITRE RESERVOIR C/W 2 BUTTON PENDANT. 5 L/MIN @ 160BAR.	£402.80

FLOWFIT 12VDC DOUBLE ACTING, NG6 (CETOP 3) SOLENOID VALVE POWER PACKS

TECHNICAL DATA

Flowfit 12VDC Double Acting NG6 Solenoid Valve Hydraulic Powerunit

POWERUNIT PACKAGE to operate a double acting cylinder on a variety of applications, complete with detachable two button pendant.

12VDC powerunit.
2.1cc/rev gear pump.
1.6kw 12VDC electric motor c/w relay and plastic motor cover.
4.5 Litre or 8.0 Litre reservoir c/w drain plug.
Powerpack complete with suction strainer, return oil conveyor and filler breather.
Horizontal mounting.
Max pressure 200 bar.
Relief valve set at 160 bar but adjustable from 40-200 bar as standard.
Max flow 5 l/min.
Relief valve and P line check.
Port size 3/8" BSP.
2 Button detachable pendant on a 4 metre lead.
Suitable for all double acting applications.

WITH MANY ADDED FEATURES SUCH AS DETACHABLE PENDANTS FOR ADDED SECURITY, REMOVEABLE PLASTIC MOTOR COVER AND A VARIATION ON WHICH RELIEF VALVE SPRING IS FITTED YOUR ARE GETTING AN EXCEPTIONALLY GOOD QUALITY PRODUCT AT A VERY COMPETITIVE PRICE.

DOUBLE ACTING, NG6 SOLENOID VALVE HYDRAULIC CIRCUIT DIAGRAM

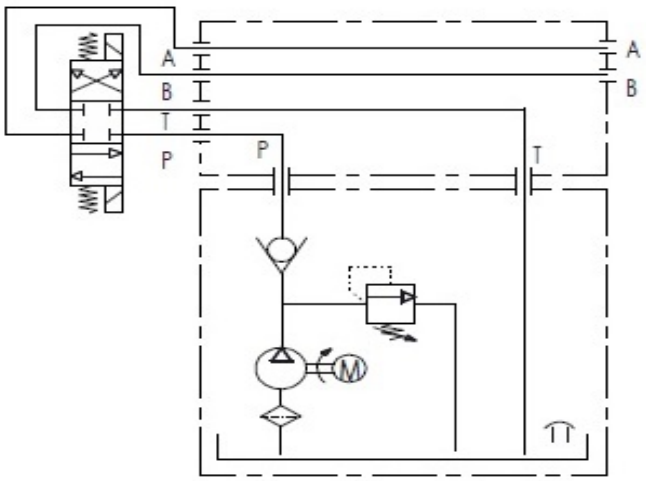

FLOW CURVE DATA

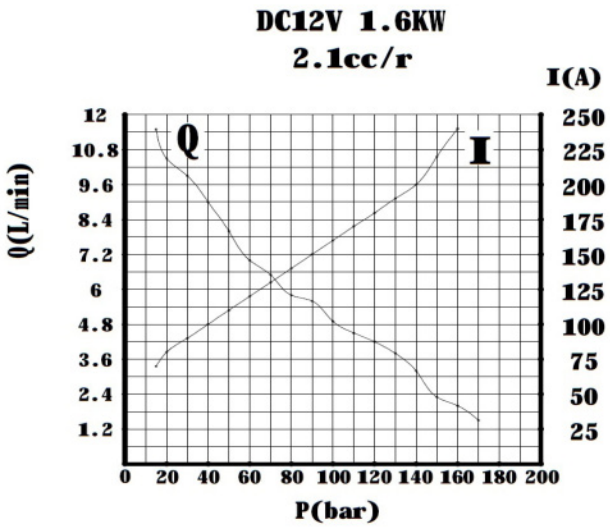

DOUBLE ACTING, NG6 SOLENOID VALVE WIRING DIAGRAM

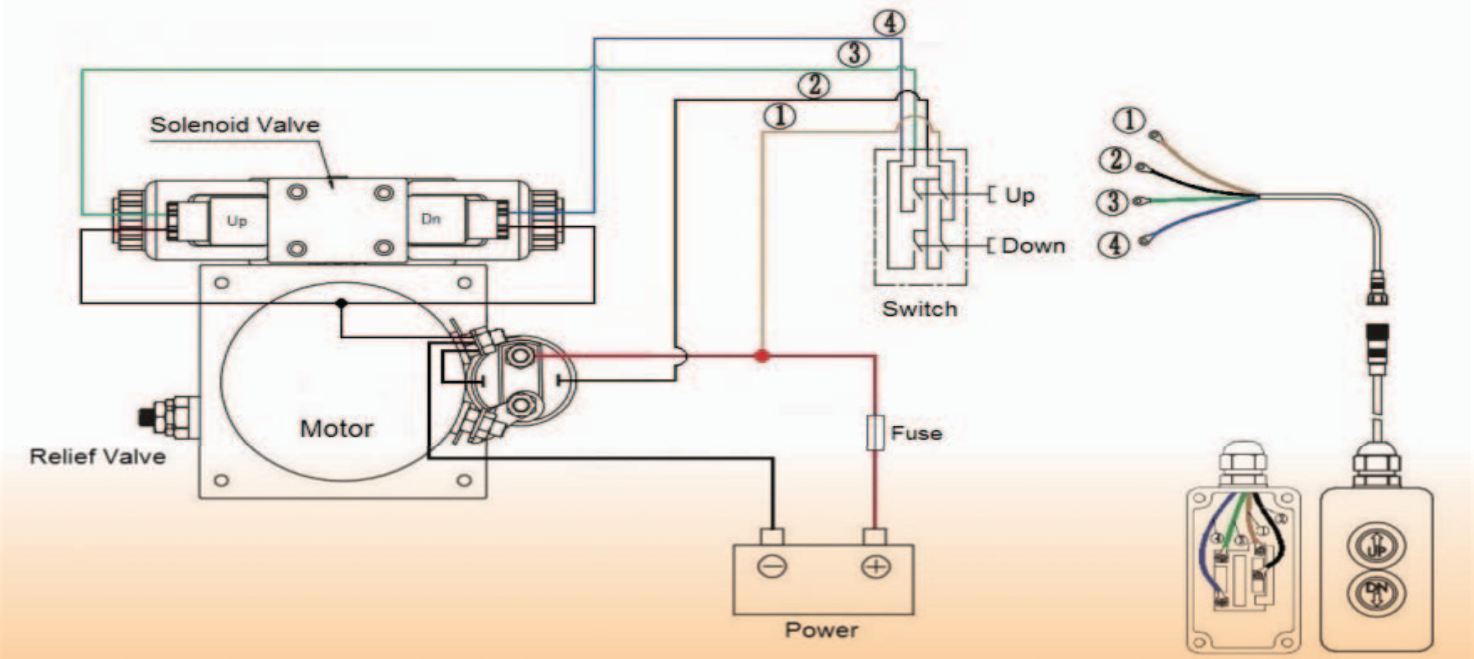

FLOWFIT 12VDC DOUBLE ACTING, NG6 (CETOP 3) SOLENOID VALVE POWER PACKS

4.5 LITRE POWER PACK DIMENSIONS

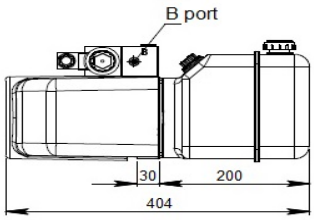

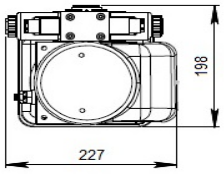

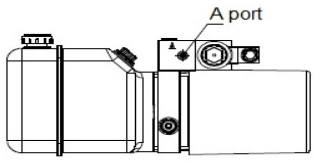

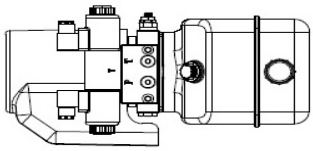

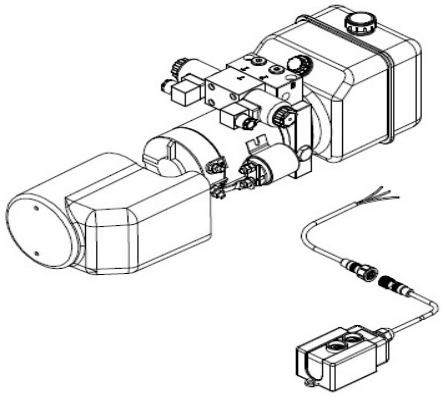

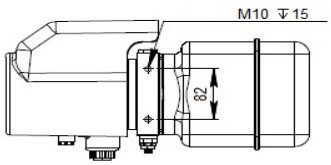

8.0 LITRE POWER PACK DIMENSIONS

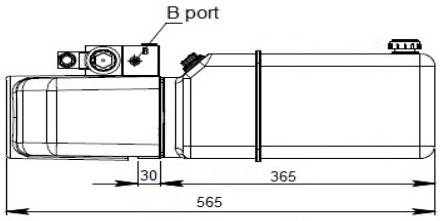

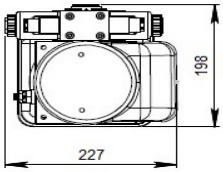

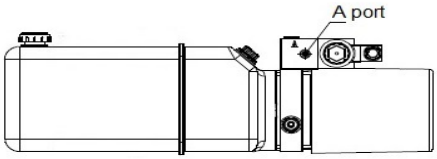

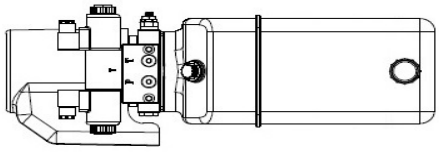

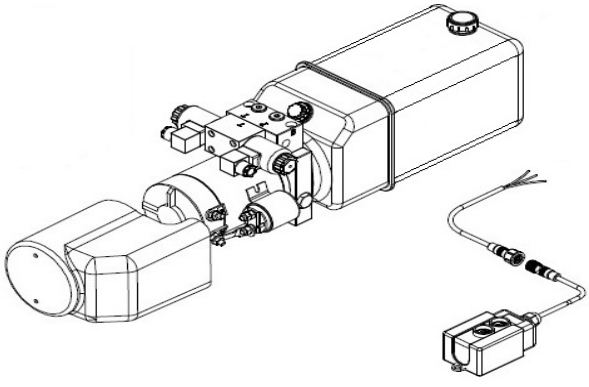

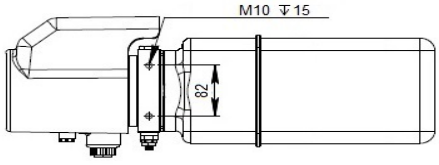

FLOWFIT 12VDC DOUBLE ACTING, DOUBLE NG6 (CETOP 3) SOLENOID VALVE POWER PACKS

The Flowfit 12VDC Double Acting Double CETOP power pack is ideal for use in the following applications:

Tail Lift/Extender	Hoists/Winches
Trailer/Tipper	Compactors
Hand operated lift stacker	Parking Systems/Barriers
Scissor Lift Platform	Security Gates
Aerial Platform	Dock Leveler

The Flowfit 12VDC Double Acting Double CETOP power pack is a compact and quiet unit, able to deliver a flow rate of up to 5 litres a minute at 160 bar. The compact design includes two CETOP 3 double acting solenoid valves operating two separate circuits, a relief valve and a flow controller mounted within the housing and comes complete with a detachable pre-wired 4 button pendant and 4.5 litre plastic tank as standard.

Options available include an 8.0 litre plastic tank for increased capacity on larger systems.

The Flowfit 12VDC Double Acting power pack will require a high capacity battery and a suitable in-line fuse for normal operation.

The motor is designed for intermittent use (S3) which is defined as a sequence of identical cycles of 10 minute duration. The cycle comprises a period of on-load (td) operation in which the motor may reach its maximum permitted temperature, followed by an off-load period (tm) of time, insufficient for the motor to return to ambient temperature.

The value of S3 on this motor equates to 7% or 42 seconds of on-load operation in a ten minute period.

PRODUCT REFERENCE	DESCRIPTION	PRICE
ZZ004234	FLOWFIT 12VDC DOUBLE ACTING, DOUBLE SOLENOID HYDRAULIC POWER-PACK, 4.5 LITRE RESERVOIR C/W 4 BUTTON PENDANT. 5 L/MIN @ 160BAR.	£473.82

PRODUCT REFERENCE	DESCRIPTION	PRICE
ZZ004233	FLOWFIT 12VDC DOUBLE ACTING, DOUBLE SOLENOID HYDRAULIC POWER-PACK, 8.0 LITRE RESERVOIR C/W 4 BUTTON PENDANT. 5 L/MIN @ 160BAR.	£495.02

FLOWFIT® FLOWFIT 12VDC DOUBLE ACTING, DOUBLE NG6 (CETOP 3) SOLENOID VALVE POWER PACKS

TECHNICAL DATA

Flowfit 12VDC Double Acting, Double NG6 Solenoid Valve Hydraulic Powerunit

POWERUNIT PACKAGE to operate two double acting cylinders independantly on a vatiety of applications, complete with four button pendant.

12VDC powerunit.
2.1cc/rev gear pump.
1.6kw 12VDC electric motor c/w relay and plastic motor cover.
4.5 Litre or 8.0 Litre reservoir c/w drain plug.
Powerpack complete with suction strainer, return oil conveyor and filler breather.
Horizontal mounting.
Max pressure 200 bar.
Relief valve set at 160 bar but adjustable from 40-200 bar as standard.
Max flow 5 l/min.
Relief valve and P line check.
Port size 3/8" BSP.
4 Button pendant on a 4 metre lead.
Suitable for all double acting applications.

WITH MANY ADDED FEATURES SUCH AS REMOVEABLE PLASTIC MOTOR COVER AND A VARIATION ON WHICH RELIEF VALVE SPRING IS FITTED YOUR ARE GETTING AN EXCEPTIONALLY GOOD QUALITY PRODUCT AT A VERY COMPETITIVE PRICE

DOUBLE ACTING, DOUBLE NG6 SOLENOID VALVE CIRCUIT DIAGRAM

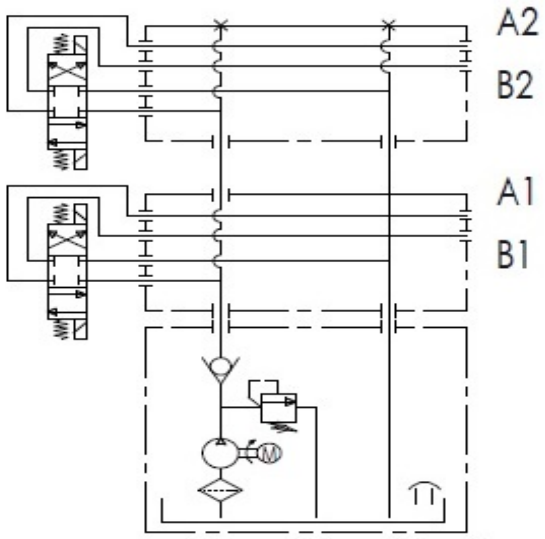

FLOW CURVE DATA

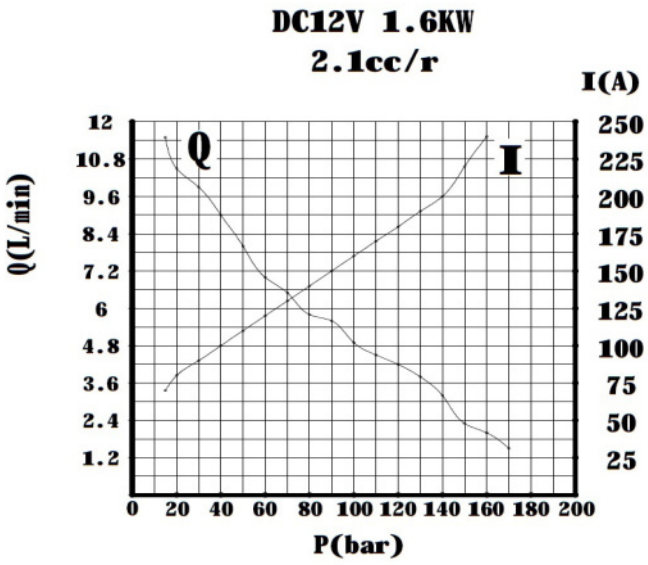

DOUBLE ACTING, DOUBLE NG6 SOLENOID VALVE WIRING DIAGRAM

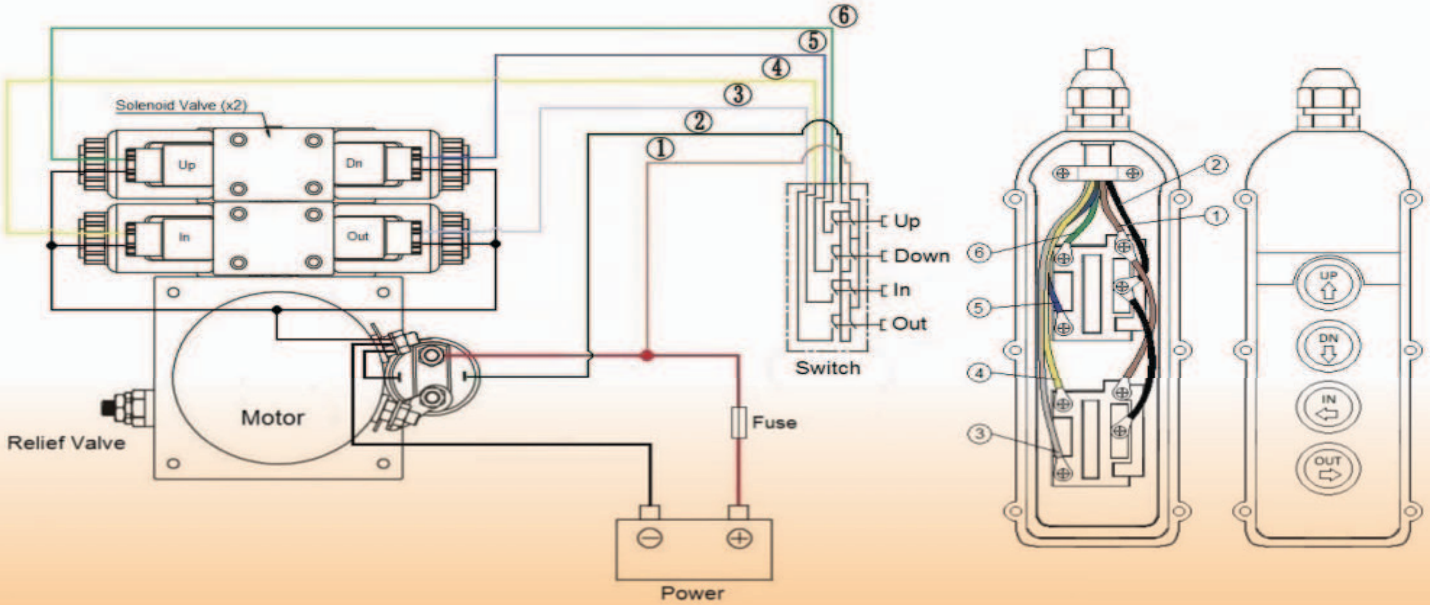

FLOWFIT 12VDC DOUBLE ACTING, DOUBLE NG6 (CETOP 3) SOLENOID VALVE POWER PACKS

FLOWFIT®

4.5 LITRE POWER PACK DIMENSIONS

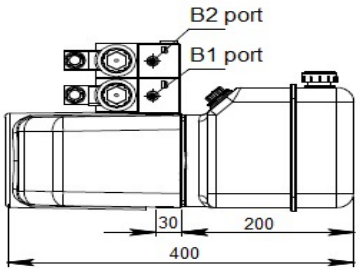

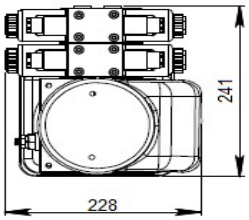

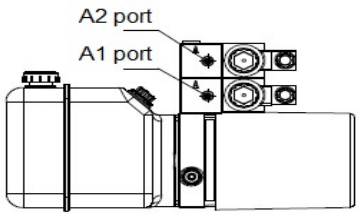

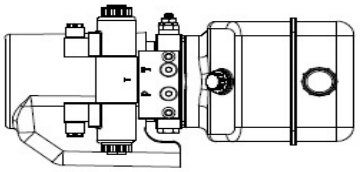

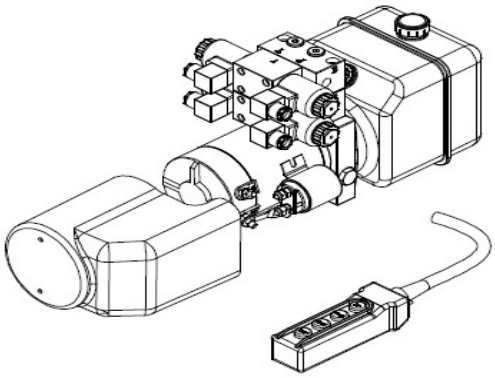

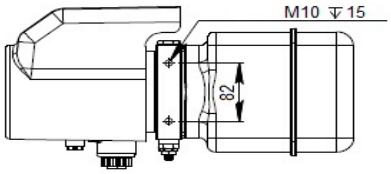

8.0 LITRE POWER PACK DIMENSIONS

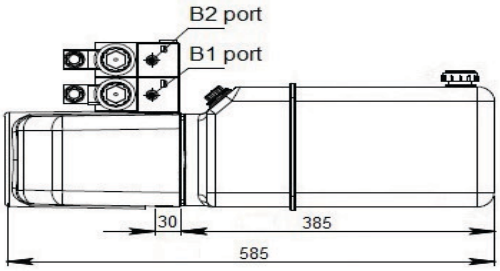

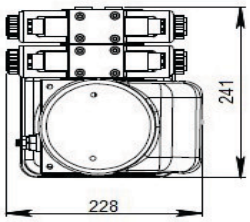

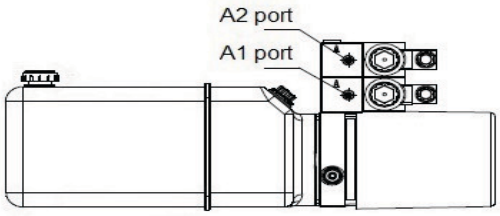

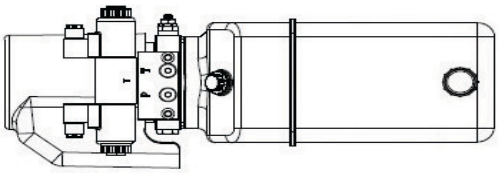

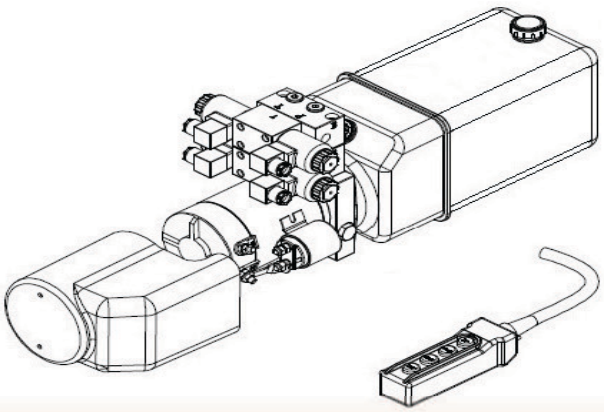

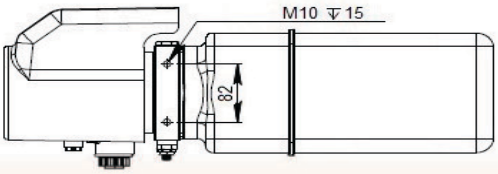

FLOWFIT 24VDC SINGLE ACTING HYDRAULIC POWER PACKS

The Flowfit 24VDC Single Acting power pack is ideal for use in the following applications:
Tail Lift
Trailer/Tipper
Hand operated lift stacker
Scissor Lift Platform
Aerial Platform

The Flowfit 12VDC Single Acting power pack is a compact and quiet unit, able to deliver a flow rate of up to 5 litres a minute at 160 bar. The compact design includes a lowering solenoid valve, relief valve and flow controller mounted within the housing and comes complete with a detachable pre-wired 2 button pendant and 4.5 litre plastic tank as standard.

Options available include an 8.0 litre plastic tank for increased capacity on larger systems and a wireless remote, operated by key fob.

The Flowfit 24VDC Single Acting power pack will require a high capacity battery and a suitable in-line fuse for normal operation.

The motor is designed for intermittent use (S3) which is defined as a sequence of identical cycles of 10 minute duration. The cycle comprises a period of on-load (td) operation in which the motor may reach its maximum permitted temperature, followed by an off-load period (tm) of time, insufficient for the motor to return to ambient temperature.

The value of S3 on this motor equates to 7% or 42 seconds of on-load operation in a ten minute period.

PRODUCT REFERENCE	DESCRIPTION	PRICE
ZZ003820	FLOWFIT 24VDC SINGLE ACTING HYDRAULIC POWERPACK, 4.5 LITRE RESERVOIR C/W 2 BUTTON PENDANT. 5 L/MIN @ 160BAR.	£275.60

PRODUCT REFERENCE	DESCRIPTION	PRICE
ZZ003835	FLOWFIT 24VDC SINGLE ACTING HYDRAULIC POWERPACK, 8.0 LITRE RESERVOIR C/W 2 BUTTON PENDANT. 5 L/MIN @ 160BAR.	£296.80

FLOWFIT 24VDC SINGLE ACTING HYDRAULIC POWER PACKS

FLOWFIT®

TECHNICAL DATA

Flowfit 24VDC Single Acting Tipper Hydraulic Powerunit

POWERUNIT PACKAGE to operate a single acting cylinder on any trailer or tipper application, or any single acting application complete with detachable two button pendant.

24VDC powerunit.
2.1cc/rev gear pump.
1.6kw 24VDC electric motor c/w relay and plastic motor cover.
4.5 Litre or 8.0 Litre reservoir c/w drain plug.
Powerpack complete with suction strainer, return oil conveyor and filler breather.
Horizontal mounting.
Max pressure 200 bar.
Relief valve set at 160 bar but adjustable from 40-200 bar as standard.
Max flow 5 l/min.
Adjustable flow control for cylinder decent control.
24VDC let down valve, relief and P line check.
Port size 3/8" BSP.
2 Button detachable pendant on a 4 metre lead.
Suitable for all single acting applications.

WITH MANY ADDED FEATURES SUCH AS FLOW CONTROL ON CYLINDER DECENT, DETACHABLE PENDANTS FOR ADDED SECURITY, REMOVEABLE PLASTIC MOTOR COVER AND A VARIATION ON WHICH RELIEF VALVE SPRING IS FITTED YOUR ARE GETTING AN EXCEPTIONALLY GOOD QUALITY PRODUCT AT A VERY COMPETITIVE PRICE.

SINGLE ACTING HYDRAULIC CIRCUIT DIAGRAM

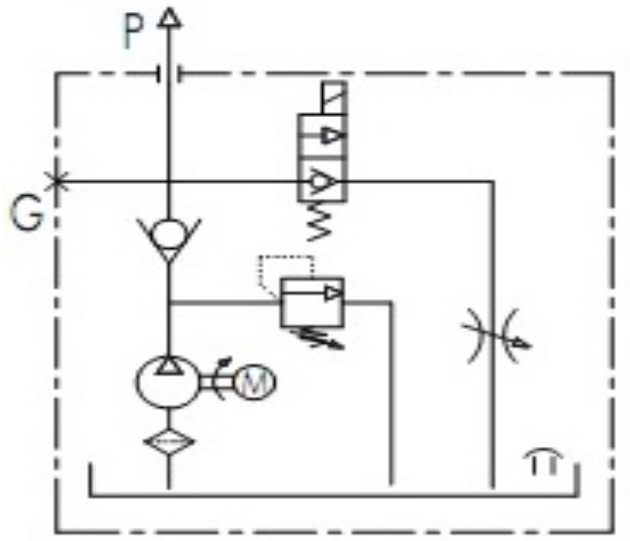

FLOW CURVE DATA

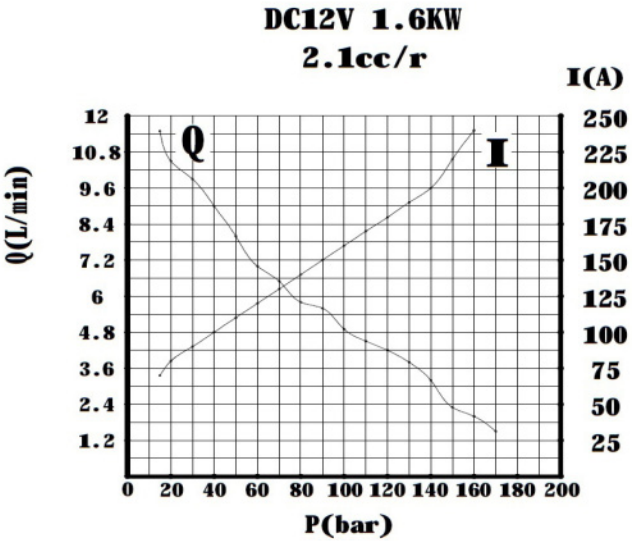

SINGLE ACTING WIRING DIAGRAM

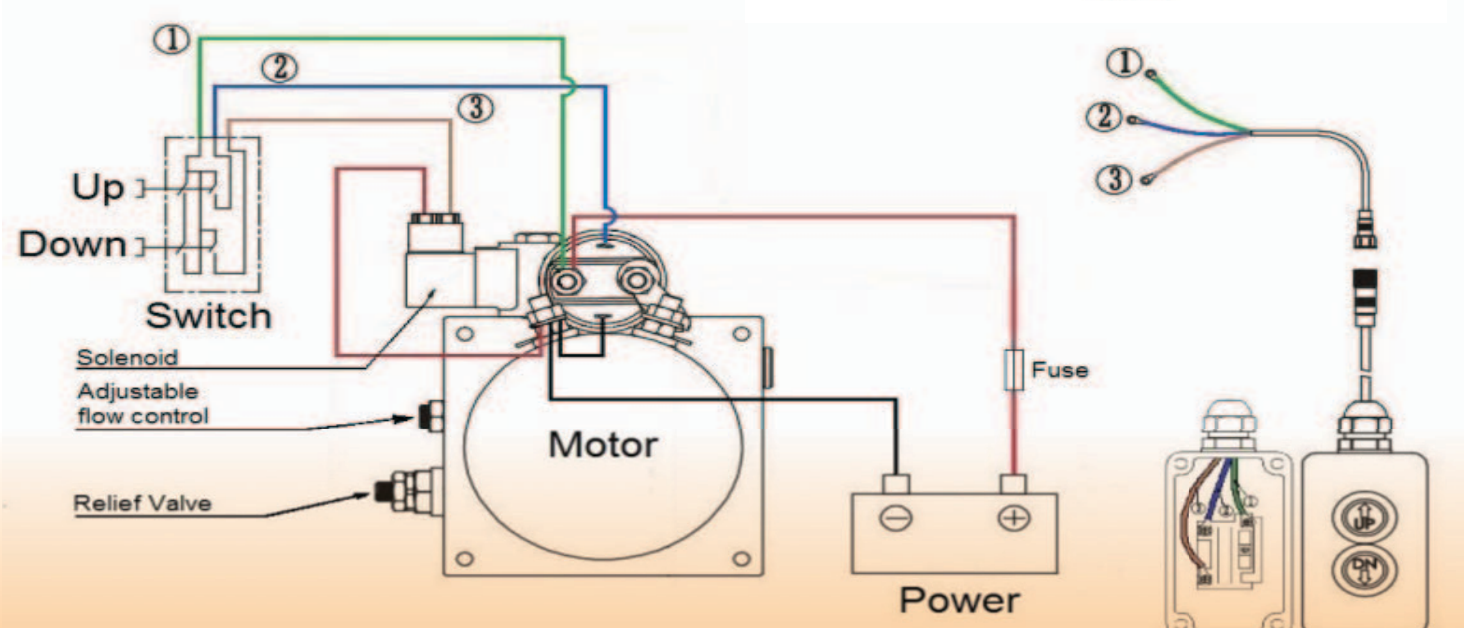

NOTE: REMOTE OPERATED 24VDC POWER PACK NOT AVAILABLE

FLOWFIT 24VDC SINGLE ACTING HYDRAULIC POWER PACKS

4.5 LITRE POWER PACK DIMENSIONS

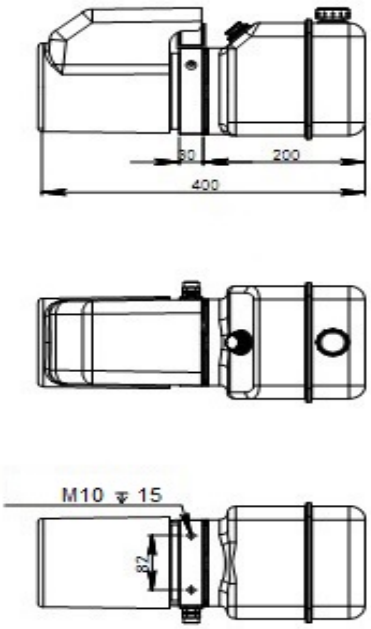

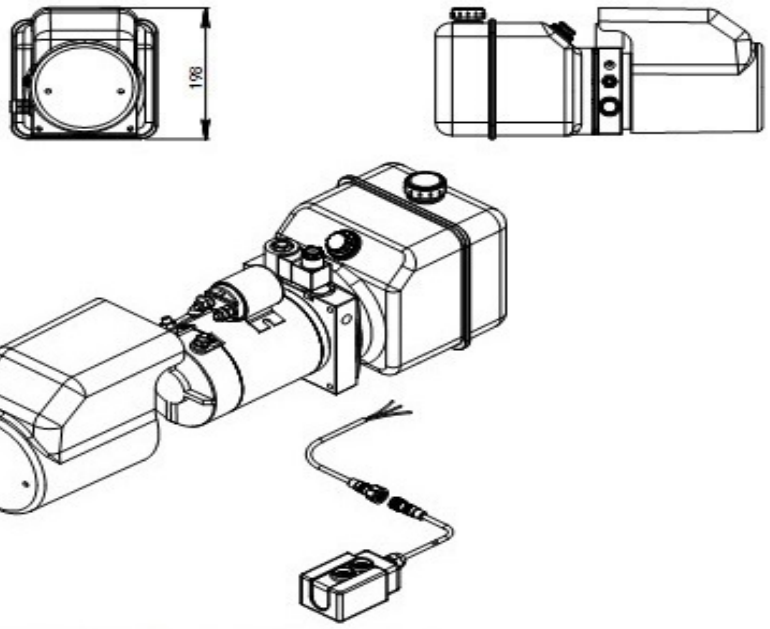

8.0 LITRE POWER PACK DIMENSIONS

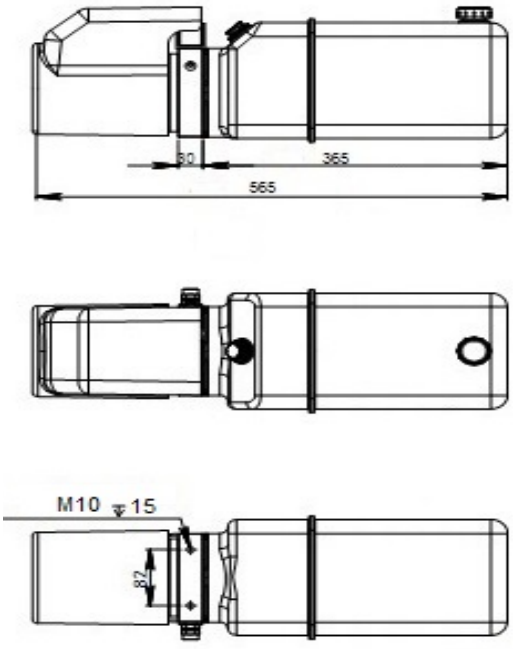

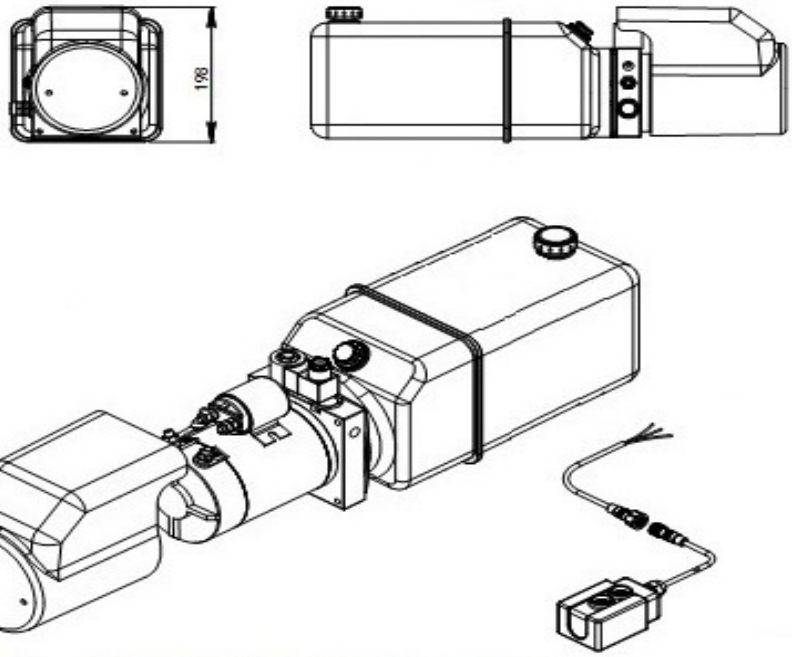

50% OFF ALL PRICES

FLOWFIT 24VDC DOUBLE ACTING, NG6 (CETOP 3) SOLENOID VALVE POWER PACKS

The Flowfit 24VDC Double Acting power pack is ideal for use in the following applications:

Tail Lift
Trailer/Tipper
Hand operated lift stacker
Scissor Lift Platform
Aerial Platform
Hoists/Winches
Compactors
Parking Systems/Barriers
Security Gates
Dock Leveler

The Flowfit 24VDC Double Acting power pack is a compact and quiet unit, able to deliver a flow rate of up to 5 litres a minute at 160 bar. The compact design includes a CETOP 3 double acting solenoid valve, relief valve and flow controller mounted within the housing and comes complete with a detachable pre-wired 2 button pendant and 4.5 litre plastic tank as standard.

Options available include an 8.0 litre plastic tank for increased capacity on larger systems.

The Flowfit 24VDC Double Acting power pack will require a high capacity battery and a suitable in-line fuse for normal operation.

The motor is designed for intermittent use (S3) which is defined as a sequence of identical cycles of 10 minute duration. The cycle comprises a period of on-load (td) operation in which the motor may reach its maximum permitted temperature, followed by an off-load period (tm) of time, insufficient for the motor to return to ambient temperature.

The value of S3 on this motor equates to 7% or 42 seconds of on-load operation in a ten minute period.

PRODUCT REFERENCE	DESCRIPTION	PRICE
ZZ004236	FLOWFIT 24VDC DOUBLE ACTING, SINGLE SOLENOID HYDRAULIC POWERPACK, 4.5 LITRE RESERVOIR C/W 2 BUTTON PENDANT. 5 L/MIN @ 160BAR.	£381.60

PRODUCT REFERENCE	DESCRIPTION	PRICE
ZZ04237	FLOWFIT 24VDC DOUBLE ACTING, SINGLE SOLENOID HYDRAULIC POWERPACK, 8.0 LITRE RESERVOIR C/W 2 BUTTON PENDANT. 5 L/MIN @ 160BAR.	£402.80

FLOWFIT 24VDC DOUBLE ACTING, NG6 (CETOP 3) SOLENOID VALVE POWER PACKS

TECHNICAL DATA

Flowfit 24VDC Double Acting NG6 Solenoid Valve Hydraulic Powerunit

POWERUNIT PACKAGE to operate a double acting cylinder on a variety of applications, complete with detachable two button pendant.

24VDC powerunit.
2.1cc/rev gear pump.
1.6kw 24VDC electric motor c/w relay and plastic motor cover.
4.5 Litre or 8.0 Litre reservoir c/w drain plug.
Powerpack complete with suction strainer, return oil conveyor and filler breather.
Horizontal mounting.

Max pressure 200 bar.
Relief valve set at 160 bar but adjustable from 40-200 bar as standard.
Max flow 5 l/min.
Relief valve and P line check.
Port size 3/8" BSP.
2 Button detachable pendant on a 4 metre lead.
Suitable for all double acting applications.

WITH MANY ADDED FEATURES SUCH AS DETACHABLE PENDANTS FOR ADDED SECURITY, REMOVEABLE PLASTIC MOTOR COVER AND A VARIATION ON WHICH RELIEF VALVE SPRING IS FITTED YOUR ARE GETTING AN EXCEPTIONALLY GOOD QUALITY PRODUCT AT A VERY COMPETITIVE PRICE.

DOUBLE ACTING, NG6 SOLENOID VALVE HYDRAULIC CIRCUIT DIAGRAM

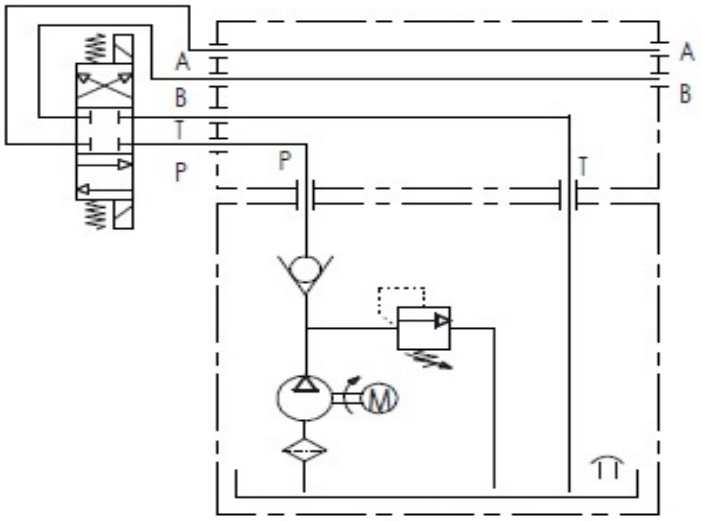

FLOW CURVE DATA

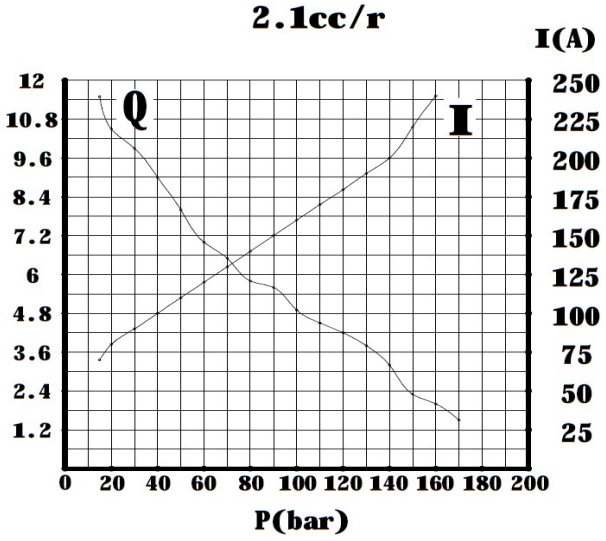

DOUBLE ACTING, NG6 SOLENOID VALVE WIRING DIAGRAM

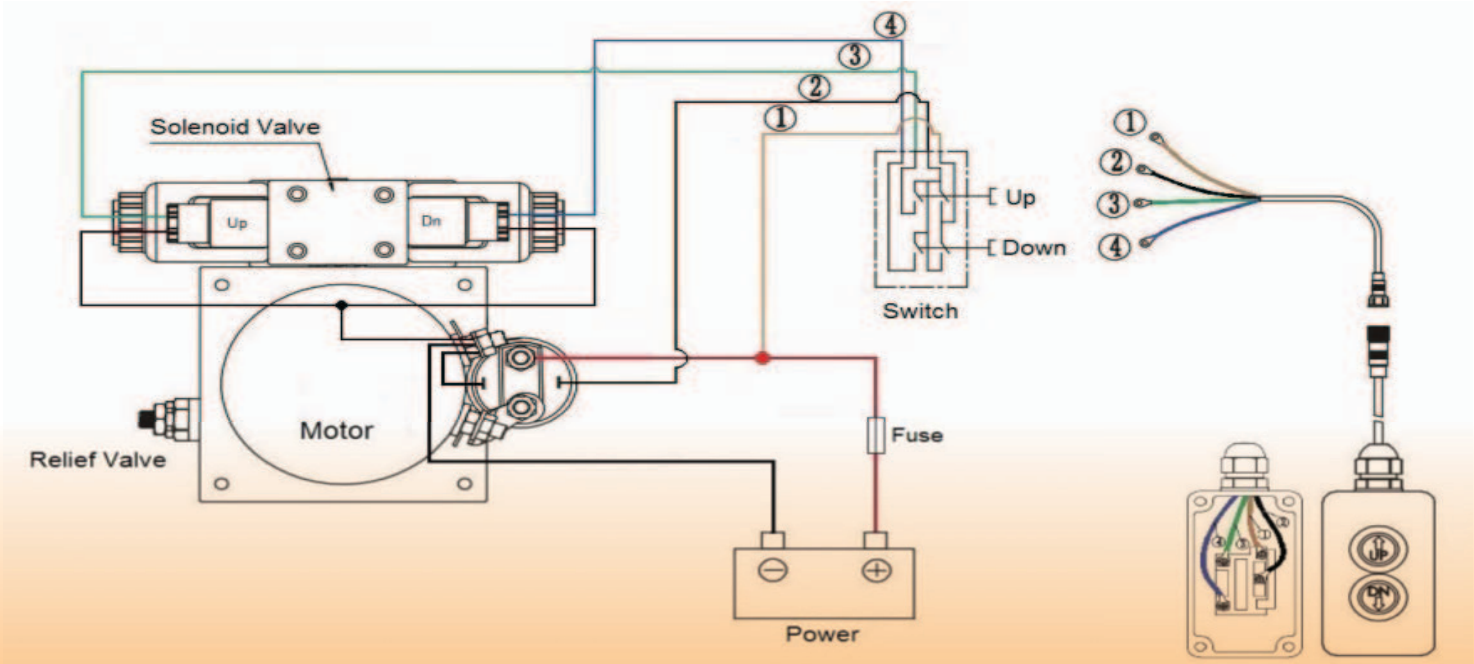

FLOWFIT 24VDC DOUBLE ACTING, NG6 (CETOP 3) SOLENOID VALVE POWER PACKS

4.5 LITRE POWER PACK DIMENSIONS

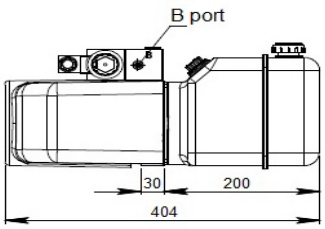

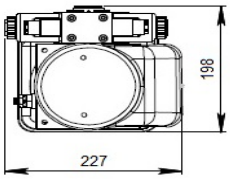

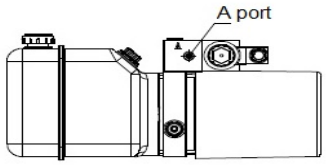

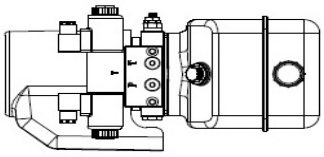

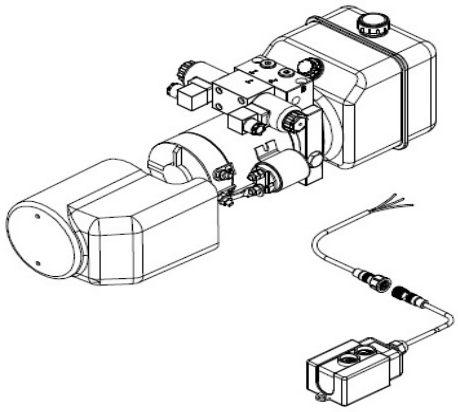

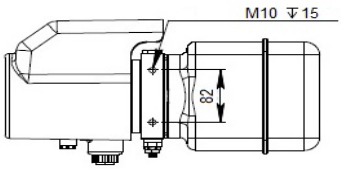

8.0 LITRE POWER PACK DIMENSIONS

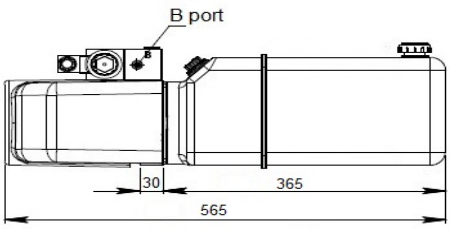

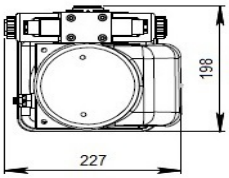

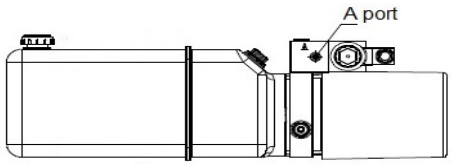

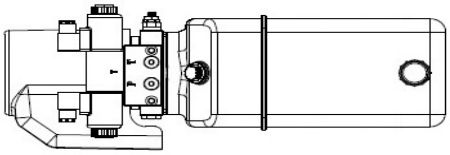

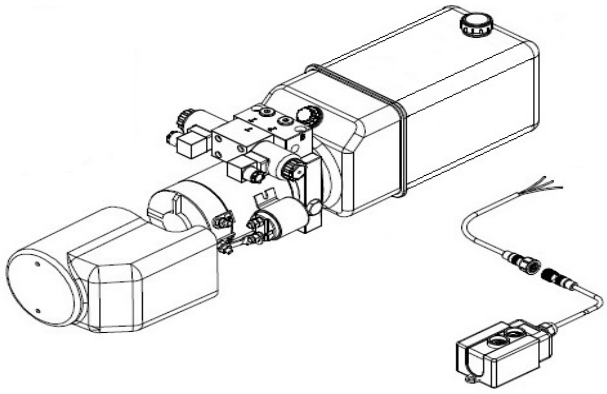

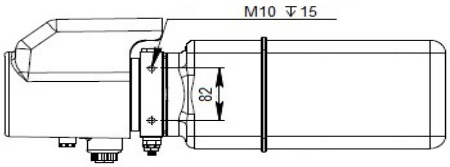

FLOWFIT 24VDC DOUBLE ACTING, DOUBLE NG6 (CETOP 3) SOLENOID VALVE POWER PACKS

The Flowfit 24VDC Double Acting Double CETOP power pack is ideal for use in the following applications:

Tail Lift/Extender
Trailer/Tipper
Hand operated lift stacker
Scissor Lift Platform
Aerial Platform
Hoists/Winches
Compactors
Parking Systems/Barriers
Security Gates
Dock Leveler

The Flowfit 12VDC Double Acting Double CETOP power pack is a compact and quiet unit, able to deliver a flow rate of up to 5 litres a minute at 160 bar. The compact design includes two CETOP 3 double acting solenoid valves operating two separate circuits, a relief valve and a flow controller mounted within the housing and comes complete with a detachable pre-wired 4 button pendant and 4.5 litre plastic tank as standard.

Options available include an 8.0 litre plastic tank for increased capacity on larger systems.

The Flowfit 12VDC Double Acting power pack will require a high capacity battery and a suitable in-line fuse for normal operation.

The motor is designed for intermittent use (S3) which is defined as a sequence of identical cycles of 10 minute duration. The cycle comprises a period of on-load (td) operation in which the motor may reach its maximum permitted temperature, followed by an off-load period (tm) of time, insufficient for the motor to return to ambient temperature.

The value of S3 on this motor equates to 7% or 42 seconds of on-load operation in a ten minute period.

PRODUCT REFERENCE	DESCRIPTION	PRICE
ZZ004238	FLOWFIT 24VDC DOUBLE ACTING, DOUBLE SOLENOID HYDRAULIC POWER-PACK, 4.5 LITRE RESERVOIR C/W 4 BUTTON PENDANT. 5 L/MIN @ 160BAR.	£473.82

PRODUCT REFERENCE	DESCRIPTION	PRICE
ZZ004239	FLOWFIT 24VDC DOUBLE ACTING, DOUBLE SOLENOID HYDRAULIC POWER-PACK, 8.0 LITRE RESERVOIR C/W 4 BUTTON PENDANT. 5 L/MIN @ 160BAR.	£495.02

FLOWFIT 24VDC DOUBLE ACTING, DOUBLE NG6 (CETOP 3) SOLENOID VALVE POWER PACKS

FLOWFIT®

TECHNICAL DATA

Flowfit 24VDC Double Acting, Double NG6 Solenoid Valve Hydraulic Powerunit

POWERUNIT PACKAGE to operate two double acting cylinders independantly on a vatiety of applications, complete with four button pendant.

24VDC powerunit.
2.1cc/rev gear pump.
1.6kw 24VDC electric motor c/w relay and plastic motor cover.
4.5 Litre or 8.0 Litre reservoir c/w drain plug.
Powerpack complete with suction strainer, return oil conveyor and filler breather.
Horizontal mounting.
Max pressure 200 bar.
Relief valve set at 160 bar but adjustable from 40-200 bar as standard.
Max flow 5 l/min.
Relief valve and P line check.
Port size 3/8" BSP.
4 Button pendant on a 4 metre lead.
Suitable for all double acting applications.

WITH MANY ADDED FEATURES SUCH AS REMOVEABLE PLASTIC MOTOR COVER AND A VARIATION ON WHICH RELIEF VALVE SPRING IS FITTED YOUR ARE GETTING AN EXCEPTIONALLY GOOD QUALITY PRODUCT AT A VERY COMPETITIVE PRICE

DOUBLE ACTING, DOUBLE NG6 SOLENOID VALVE CIRCUIT DIAGRAM

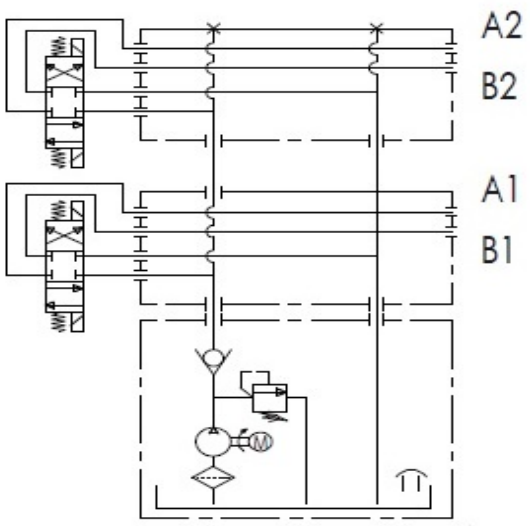

FLOW CURVE DATA

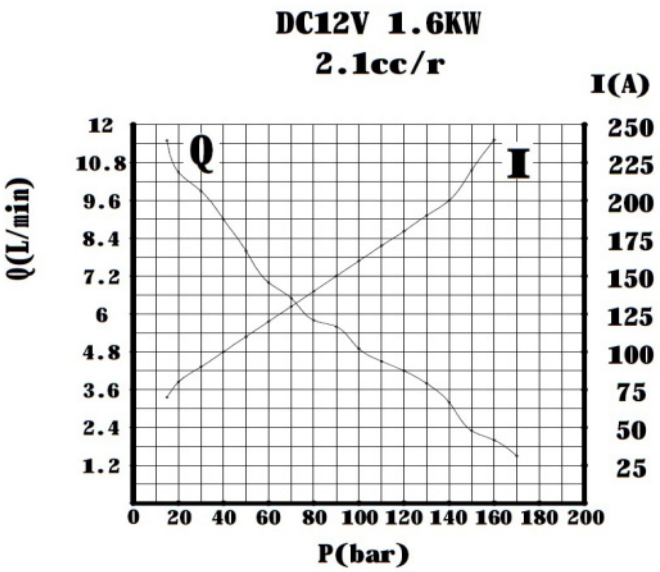

DOUBLE ACTING, DOUBLE NG6 SOLENOID VALVE WIRING DIAGRAM

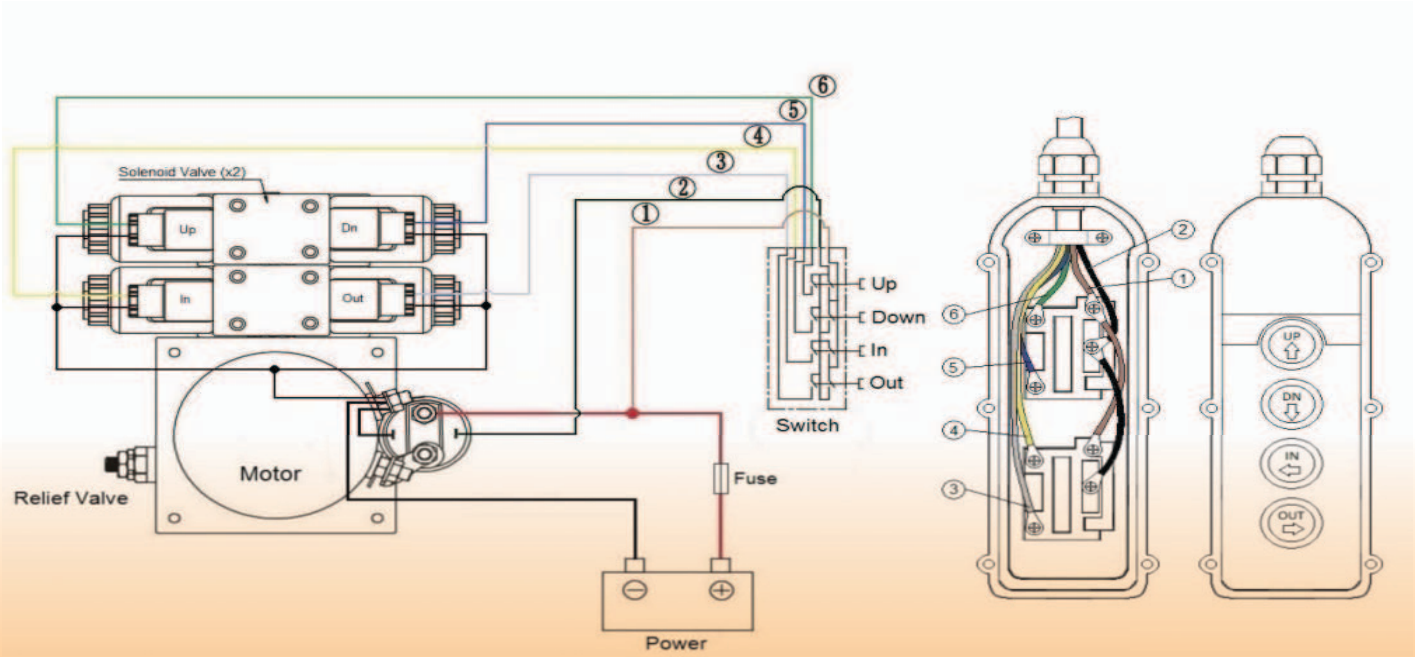

FLOWFIT 24VDC DOUBLE ACTING, DOUBLE NG6 (CETOP 3) SOLENOID VALVE POWER PACKS

4.5 LITRE POWER PACK DIMENSIONS

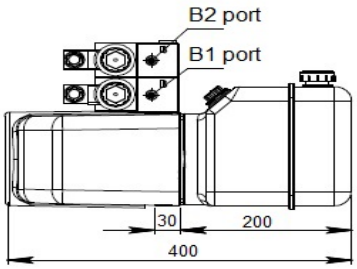

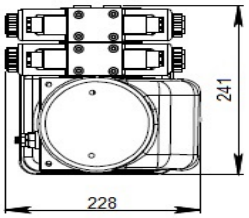

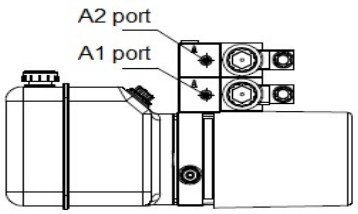

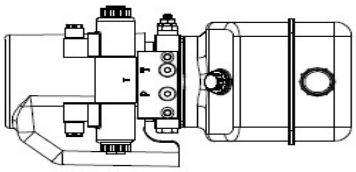

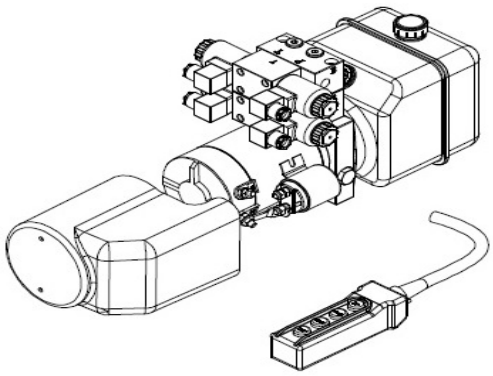

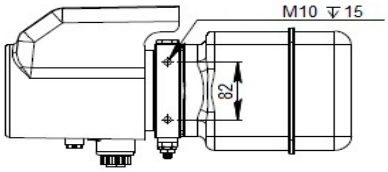

8.0 LITRE POWER PACK DIMENSIONS

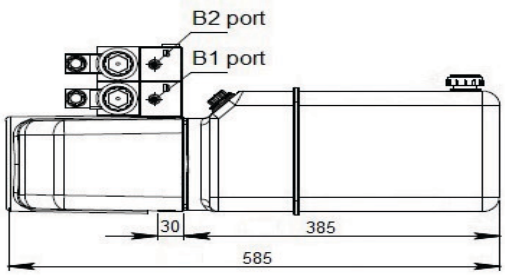

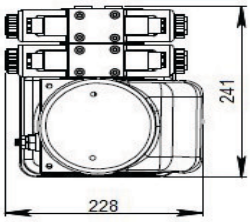

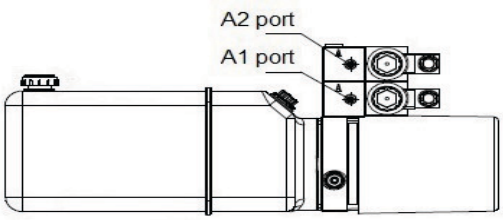

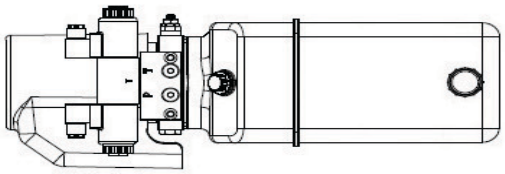

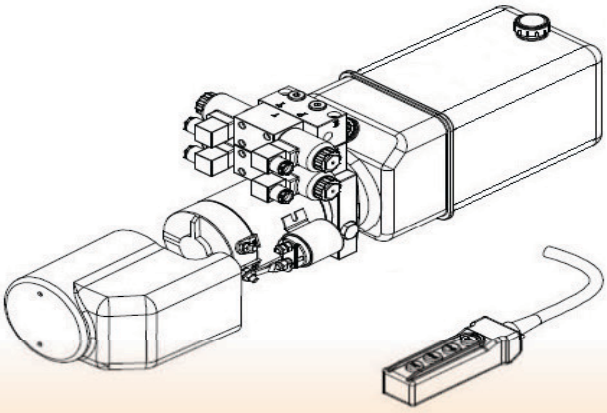

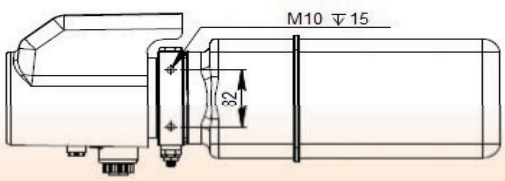

ACCESSORIES

FLOWFIT®

24VDC MOTOR (with Relay)

Voltage:	24VDC
Power:	1.6kW
Relay:	24V 200A
Speed:	3500RPM
Duty:	S3=7% (Intermittent Duty)
Dimensions:	Ø 114mm, Length 170mm
Drive:	Splined

12VDC MOTOR (with Relay)

Voltage:	12VDC
Power:	1.6kW
Relay:	12V 200A
Speed:	3500RPM
Duty:	S3=7% (Intermittent Duty)
Dimensions:	Ø 114mm, Length 170mm
Drive:	Splined

S3 Intermittent duty is defined as a sequence of identical cycles of 10 minute duration.The cycle comprises a period of on-load (td) operation in which the motor may reach its maximum permitted temperature, followed by an off-load period (tm) of time, insufficient for the motor to return to ambient temperature.

The value of S3 on this motor equals 7% or 42 seconds of on-load operation in a ten minute period.

PRODUCT REFERENCE	DESCRIPTION	PRICE
24VDCMOTOR	24VDC MOTOR 1.6KW C/W RELAY	£140.83
12VDCMOTOR	12VDC MOTOR 1.6KW C/W RELAY	£140.83

24VDC COIL FOR LET DOWN VALVE

24VDC coil with Herschmann connector, for use on the lowering valve of Single Acting 24VDC power packs (ZZ003820 and ZZ003835).

12VDC COIL FOR LET DOWN VALVE

12VDC coil with Herschmann connector, for use on the lowering valve of Single Acting 12VDC power packs (ZZ003468 and ZZ003834).

PRODUCT REFERENCE	DESCRIPTION	PRICE
24VLOWCOIL	24VDC COILS TO SUIT ZZ003820 & ZZ003835 USED ON LET DOWN VALVE	£15.22
12VLOWCOIL	12VDC COILS TO SUIT ZZ003468 & ZZ003834 USED ON LET DOWN VALVE	£15.22

JC00-01 DOUBLE ACTING HOUSING

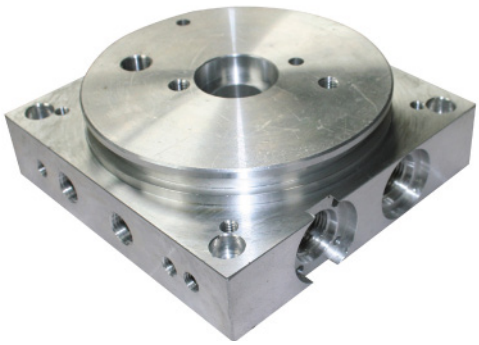

Double Acting Housing machined from solid aluminium block.
Comes with 1/4" BSP threaded P and T ports to use as basic P and T unit.
Machined ports for Relief Valve, Check Valve, and Flow Control Valve.

Requires seperate manifold for Double Acting operation.

Mounting face machined to enable DC motor to be positioned at 90° intervals.

PRODUCT REFERENCE	DESCRIPTION	PRICE
DAHOUSING	JC00-01 DOUBLE ACTING HOUSING TO SUIT NEW STYLE POWERPACKS	£76.32

CETOP 3 NG6 1 STATION MANIFOLD

CETOP 3 (NG6) 1 station manifold machined from solid aluminium block.
P, T, A and B ports come with 1/4" BSP thread.

Two manifolds can be stacked together creating a Double Acting, Double Cetop 3 power pack.

Mounting bolts:
M8 x 50mm Cap Head (single manifold)
M8 x 100mm Cap Head (double manifold)

PRODUCT REFERENCE	DESCRIPTION	PRICE
CETOP31STATION	CETOP 3, 1 STATION MANIFOLD TO SUIT JC00-01 HOUSING	£25.44

FLOWFIT®

ACCESSORIES

PLASTIC 8.0 LITRE TANK

8.0 Litre horizontal plastic tank for increased capacity of larger hydraulic systems.

Comes with Filler Breather (with Dip Stick), blank plug and Jubilee Clip.

PRODUCT REFERENCE	DESCRIPTION	PRICE
PLASTANK8L	PLASTIC TANK 8.0L C/W RED PLUG AND BREATHER	£15.11

2 BUTTON SINGLE ACTING 3 WIRE PENDANT

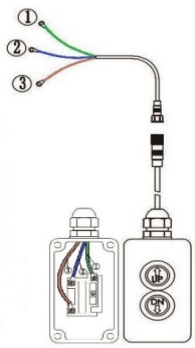

2 button Single Acting pendant comes pre-wired for powered lift and gravity lowered applications.

Comes with 4 metres of detachable 3 wire cable for added security.

Also available for Single Acting power packs with remote option.

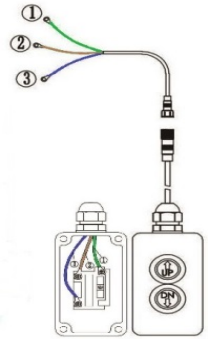

Wiring diagram for Single Acting power pack with remote option.

PRODUCT REFERENCE	DESCRIPTION	PRICE
PENDSA	3 WIRE SINGLE ACTING PENDANT WITH 4 METRE CABLE DETACHABLE	£29.68

2 BUTTON DOUBLE ACTING 4 WIRE PENDANT

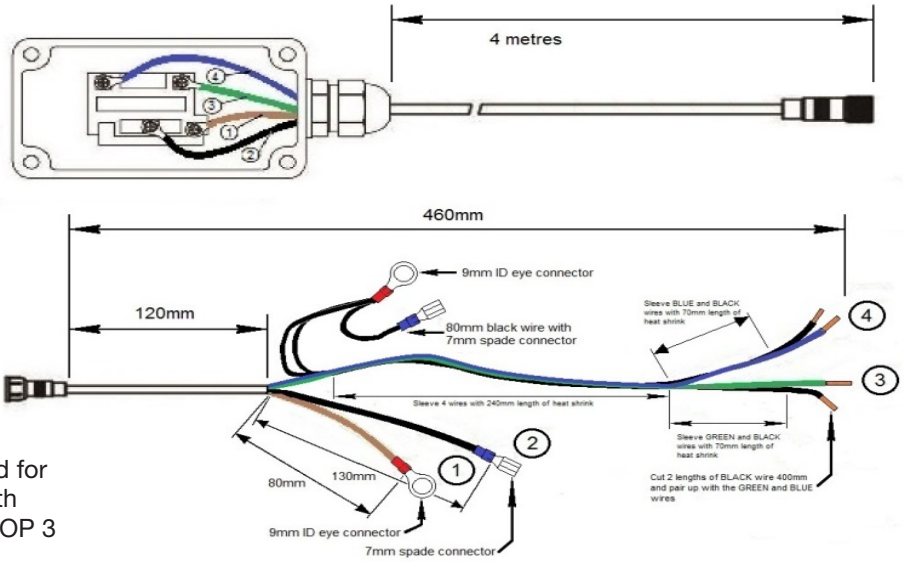

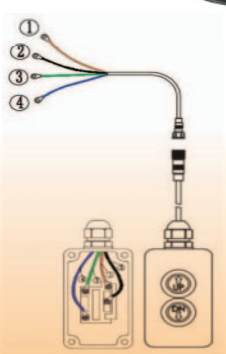

2 button Double Acting pendant comes pre-wired for powered operation in both directions through a CETOP 3 (NG6) solenoid valve.

Comes with 4 metres of detachable 4 wire cable for added security.

PRODUCT REFERENCE	DESCRIPTION	PRICE
PENDDA	4 WIRE DOUBLE ACTING PENDANT WITH 4 METRE CABLE DETACHABLE	£40.28

ACCESSORIES

4 BUTTON DOUBLE ACTING 6 WIRE PENDANT

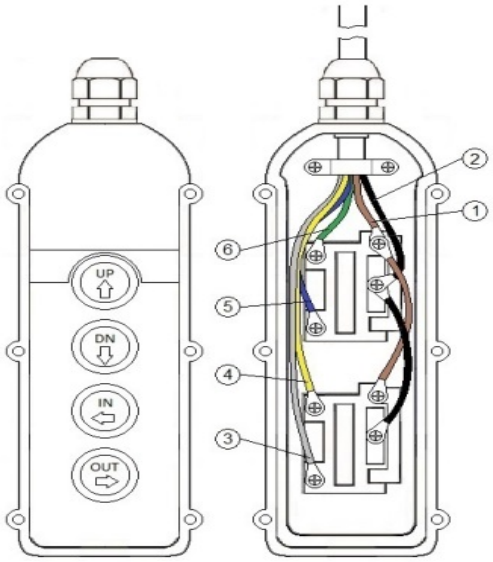

4 button Double Acting pendant comes pre wired to operate two separate hydraulic circuits through two CETOP 3 (NG6) solenoid valves.

Comes with 4 metres of 6 wire cable for hard wiring into a power pack.

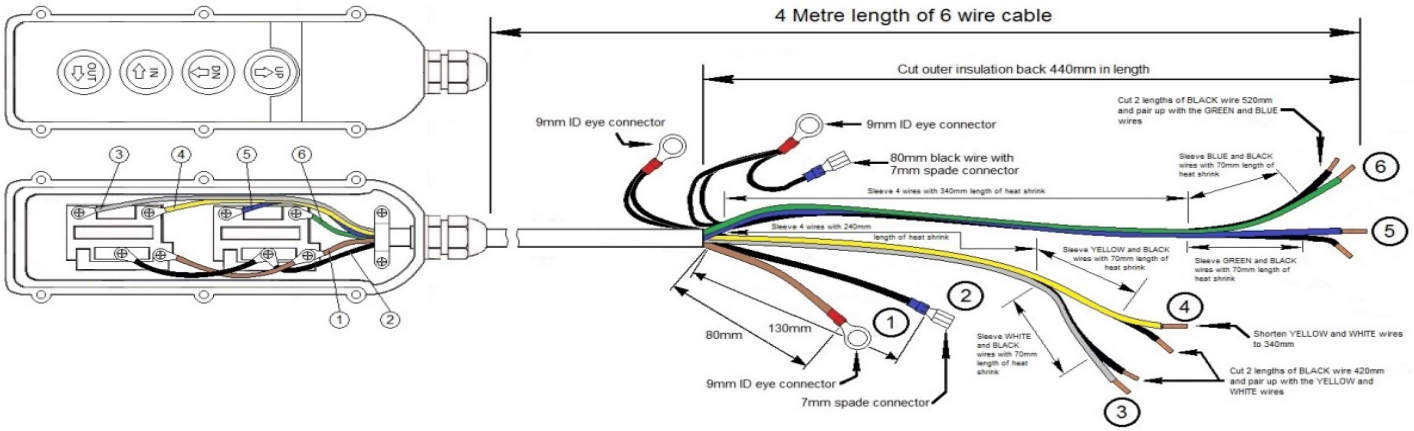

PRODUCT REFERENCE	DESCRIPTION	PRICE
PENDDADA	6 WIRE DOUBLE ACTING PENDANT WITH 4 METRE CABLE DETACHABLE	£53.00

PRODUCT REFERENCE	DESCRIPTION	PRICE
LABEL: YELLOW WARNING	YELLOW WARNING LABEL TO SUIT SINGLE ACTING POWERPACKS	£2.12
LABELS: ZZ003468	FLOWFIT LABEL TO SUIT ZZ003468	£2.12
LABELS: ZZ003820	FLOWFIT LABEL TO SUIT ZZ003820	£2.12
LABELS: ZZ003834	FLOWFIT LABEL TO SUIT ZZ003834	£2.12
LABELS: ZZ003835	FLOWFIT LABEL TO SUIT ZZ003835	£2.12

FLOWFIT

SHOP NOW OPEN 6 DAYS A WEEK

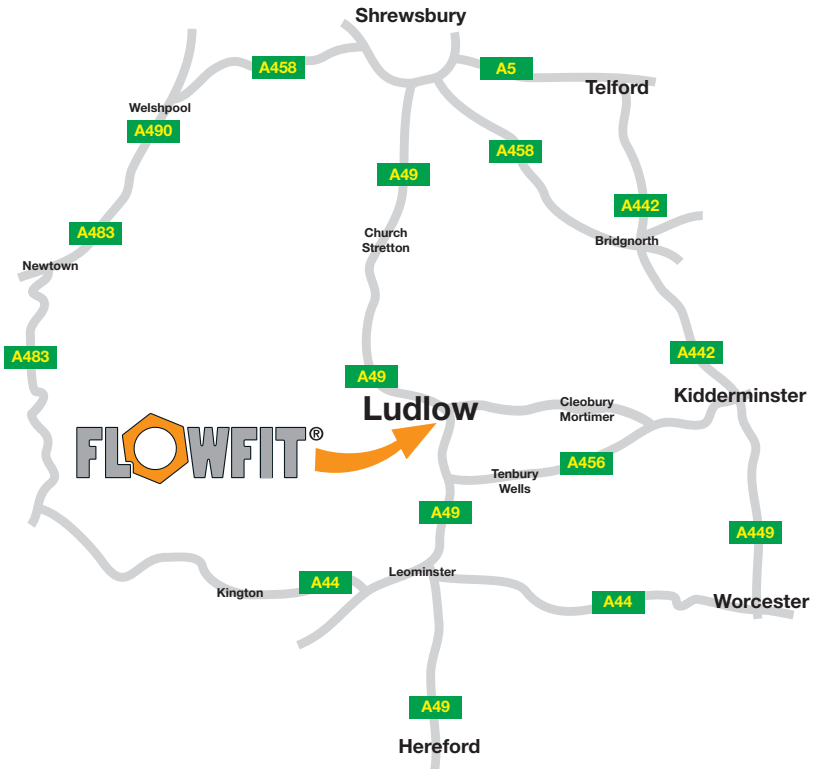

HOW TO FIND US

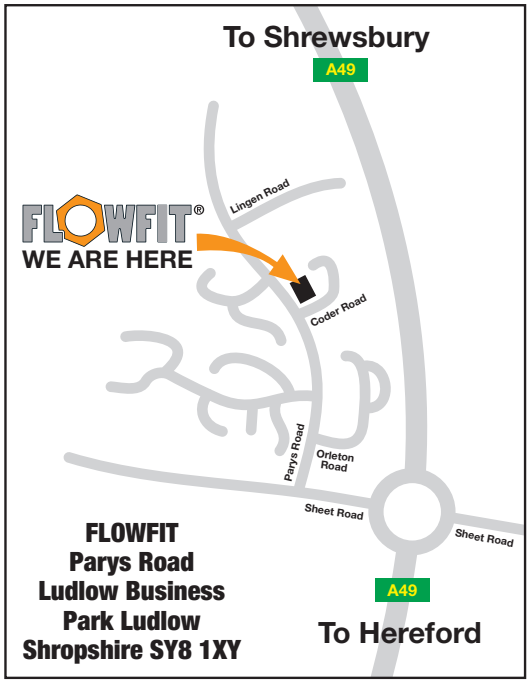

FLOWFIT
Parys Road
Ludlow Business
Park Ludlow
Shropshire SY8 1XY

Telephone: +44 (0)1584 876 033 Fax: +44 (0)1584 876 044
Email: sales@flowfitonline.com

www.flowfitonline.com

FLOWFIT MOBILE ENGINE DRIVEN HYDRAULIC POWER UNITS ON WHEELS

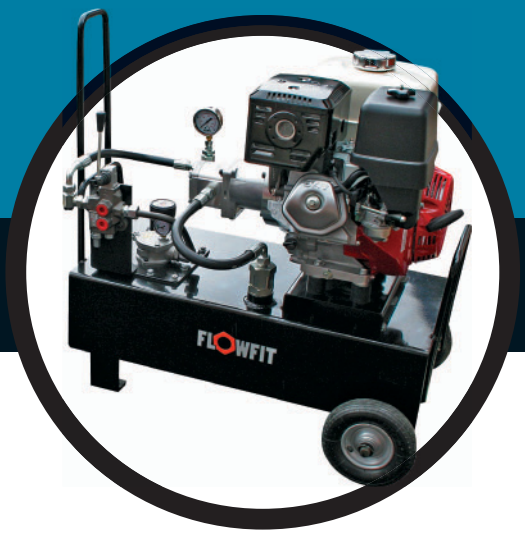

FLOWFIT®

FLOWFIT MOBILE ENGINE DRIVEN HYDRAULIC POWER UNITS

The Flowfit Range of Petrol Engine Driven Hydraulic Power Units on wheels is based on the Honda GX160 5.5 HP, Honda GX270 9.5 HP and the Honda GX390 13 HP range of engines we do have larger Honda sizes up to 25HP GX630 upon request.

Commercial Self Contained Portable Hydraulic Power Units are designed for heavy duty farm, marine and other commercial applications. Our HPU's replace farm tractor, truck and other hydraulic power supplies. Use with grain augers, mixers, lifts and other hydraulic applications with pressure available up to 200 bar (2900 psi). We offer a variety of petrol engines from the Honda GX Series and for those on a budget, Loncin engines are available. Alternatively, Hatz, Changfa or Lombardini commercial diesel engines can be specified, along with electric start/stop on all engine ranges upon request. Please contact our technical support staff to discuss all of your specific requirements.

SPECIFICATION

Max Pressure: 200 bar (2900 psi).
Relief valve Mounted on the front of the Gear Pump (pre-set to 150 bar).
Gear Pump flows available up to 25.5 l/min.
Flowfit Pressure Gauge fitted 0-280 bar (0-4000psi).
Hydraulic Tank/Reservoir Capacity 50 Litres.
Rugged Construction.
Collapsible handle assembly for ease of transportation.
Suction strainer fitted 125 micron, max flow 30 l/min accessible via bolt down hatch on top of tank.
Return line filter tank mounted 10 micron cellulose filter element, c/w visual clogging indicator and diffuser and max pressure 8 bar / 116 psi. Max flow to return through the return line filter 45 l/min. Can be uprated to 65 l/min returnable flow with 125 micron filter element fitted.
We recommend regular checking of visual indicator to ensure filter element does not need changing.

Replacement return line filter element is available. We recommend this is changed after the first 20 hours of use to ensure maximum efficiency and cleanliness of the hydraulic powerunit.
Filling Point - Via a visual level indicator c/w with float system.
Filler is removeable and allows a constant indication of the hydraulic oil level inside the tank.
Max Temperature of Oil 80°C.
Flat face quick release couplings 2 off complete fitted on pump outlet and tank top return filter ready to connect your 1/2" bsp male hose connection or male adaptor.
Power Unit fitted with top quality Gates hydraulic hose assemblies
Pneumatic tyre wheels Kit included for ease of transportation.
Full 1 Year Warranty (2 year warranty standard on Honda engines)
Made in England.

ENGINE
CHOICE OF HONDA AND LONCIN PETROL OR HATZ ENGINES

PRESSURE GAUGE
0-280 BAR (0-4000 PSI) GAUGE FITTED AS STANDARD.
MAXIMUM SYSTEM PRESURE =200 BAR

HOSE
TOP QUALITY GATES FLEXIBLE HOSE USED THROUGHOUT

DAMPERS

40mm DAMPERS FITTED AS STANDARD TO REDUCE ENGINE VIBRATION AND NOISE LEVELS

RETURN FILTER

10 MICRON TANK RETURN FILTER FITTED WITH VISUAL INDICATOR AND BYPASS VALVE TO ENSURE CLEANLINESS OF THE HYDRAULIC OIL AND EXTENDING OPERATING LIFE.

QUICK RELEASE CONNECTIONS

1/2"BSP DN08 FLAT FACE QUICK RELEASE COUPLINGS FITTED AS STANDARD FOR EASE OF STORAGE & TRANSPORTATION

TANK
50 LITRE TANK MANUFACTURED FROM 4mm SHEET STEEL FOR STURDY CONSTRUCTION, ENABLING OTHER COMPONENTS TO BE MOUNED DIRECTLY ON TO IT. THIS DESIGN PROVIDES A LOW CENTRE OF GRAVITY FOR ADDED STABILTY ON ROUGH TERRAIN.

FILLING POINT AND LEVEL READING

VISUAL LEVEL INDICATOR FITTED TO FILLER PORT.

OPERATES USING A FLOAT AND ARCHIMEDES SCREW.

LEVEL INDICATOR

SECONDARY LEVEL INDICATOR MOUNTED AT THE END OF TANK FOR ADDED PROTECTION

FLOWFIT MOBILE ENGINE DRIVEN HYDRAULIC POWER UNITS

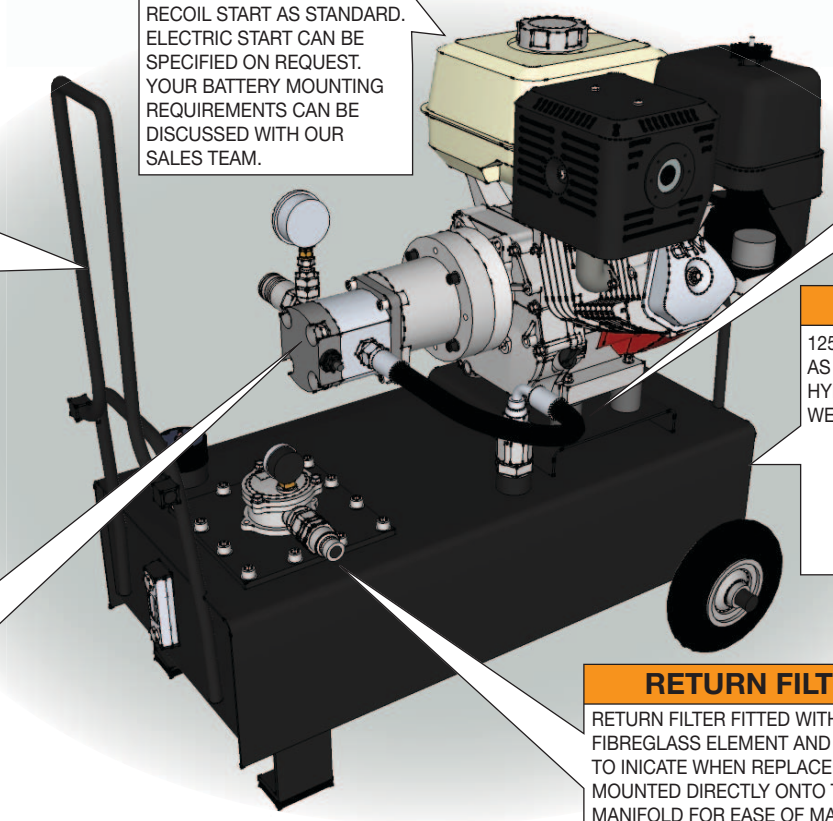

ENGINE

ALL ENGINES COME WITH RECOIL START AS STANDARD. ELECTRIC START CAN BE SPECIFIED ON REQUEST. YOUR BATTERY MOUNTING REQUIREMENTS CAN BE DISCUSSED WITH OUR SALES TEAM.

HANDLE ASSEMBLY

FOLDING HANDLE FOR COMPACT STORAGE

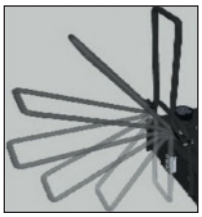

GEAR PUMP

PUMP MOUNTED RELIEF VALVE. REDUCING THE NEED FOR COMPLEX PIPEWORK

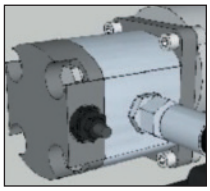

HOSE

TOP QUALITY GATES FLEXIBLE HOSE USED THROUGHOUT

SUCTION STRAINER

125 MICRON SUCTION STRAINER FITTED AS STANDARD TO ASIST IN KEEPING THE HYDRAULIC SYSTEM CLEAN. REDUCING WEAR AND MAINTENANCE COSTS.

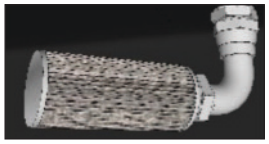

RETURN FILTER AND MANIFOLD

RETURN FILTER FITTED WITH 10 MICRON FIBREGLASS ELEMENT AND FILTER GAUGE TO INICATE WHEN REPLACEMENT IS DUE. MOUNTED DIRECTLY ONTO THE ACCESS MANIFOLD FOR EASE OF MAINTENANCE. MANIFOLD ALLOWS ACCESS TO THE INTERIOR OF THE TANK.

FLOWFIT HONDA PETROL POWER UNIT (RECOIL START)

PRODUCT REFERENCE	DESCRIPTION	RRP
ZZ003799	GX390FQ 13HP HONDA PETROL ENGINE PORTABLE UNIT 25.5L/MIN 210BAR RECOIL START	£3250.91
ZZ003801	GX270FQ 9.5HP HONDA PETROL ENGINE PORTABLE UNIT 19.5L/MIN 200BAR RECOIL START	£2900.86
ZZ003802	GX160FQ 5.5HP HONDA PETROL ENGINE PORTABLE UNIT 10.5L/MIN 200BAR RECOIL START	£2226.00

FLOWFIT LONCIN PETROL POWER UNIT (RECOIL START)

PRODUCT REFERENCE	DESCRIPTION	RRP
ZZ003800	G390F-P 13HP LONCIN PETROL ENGINE PORTABLE UNIT 25.5L/MIN 210BAR RECOIL START	£2528.10
ZZ003803	G270F-P 9HP LONCIN PETROL ENGINE PORTABLE UNIT 19.5L/MIN 200BAR RECOIL START	£2206.92
ZZ003804	G160F-P 5.5HP LONCIN PETROL ENGINE PORTABLE UNIT 10.5L/MIN 200BAR RECOIL START	£1861.36

FLOWFIT MOBILE ENGINE DRIVEN HYDRAULIC POWER UNITS

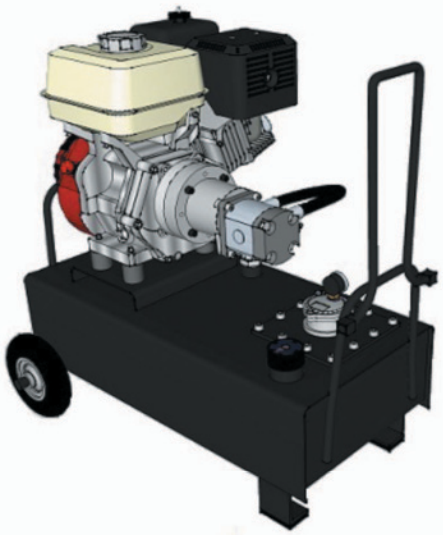

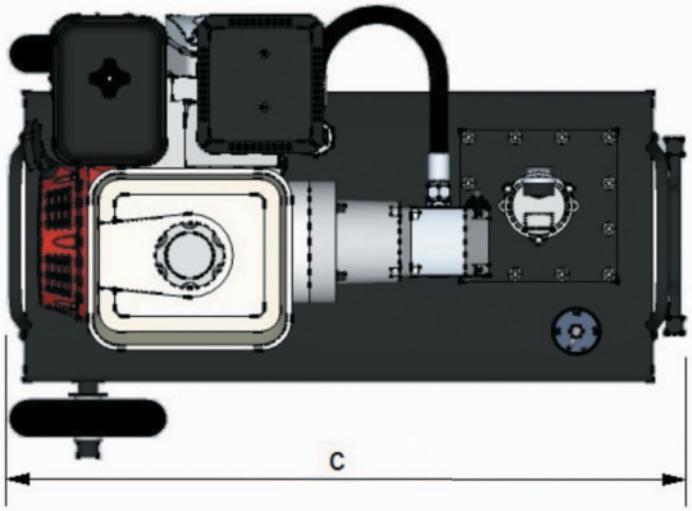

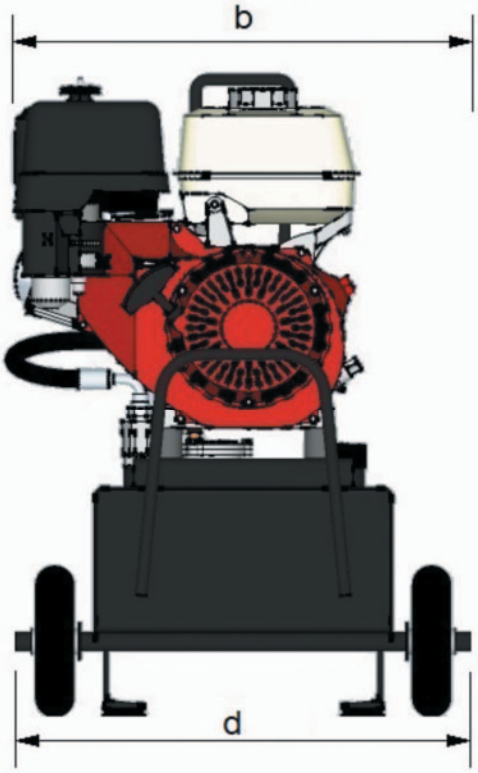

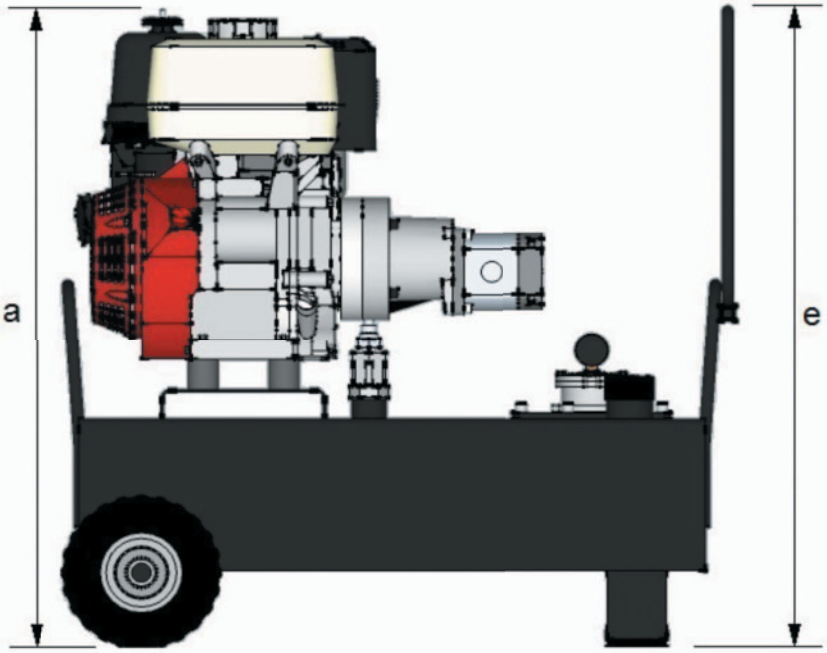

PRODUCT REFERENCE	ENGINE	PUMP	FLOW RATE	PRESSURE		WEIGHT (DRY)	DIMENSIONS				
				BAR	PSI		A	B	C	D	E
ZZ003799	GX390FQ	8CC	25.5L/MIN	210	3045	75KG	821mm	587mm	860mm	580mm	845mm
ZZ003801	GX270FQ	6.5CC	19.5L/MIN	200	2900	69KG	788mm	563mm			
ZZ003802	GX160FQ	3.2CC	10.5L/MIN	200	2900	60KG	713mm	529mm			
ZZ003800	G390F	8CC	25.5L/MIN	210	3045	75KG	818mm	584mm			
ZZ003803	G270F	6.5CC	19.5L/MIN	200	2900	69KG	788mm	570mm			
ZZ003804	G160F	3.2CC	10.5L/MIN	200	2900	60KG	793mm	530mm			

FLOWFIT MOBILE ENGINE DRIVEN HYDRAULIC POWER UNITS

FLOWFIT

HANDLE ASSEMBLY

FOLDING HANDLE FOR COMPACT STORAGE

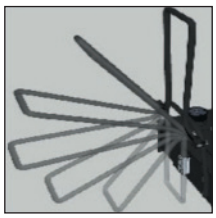

PRESSURE GAUGE

0-280 BAR (0-4000 PSI) GAUGE FITTED AS STANDARD.
MAXIMUM SYSTEM PRESURE =200 BAR

ENGINE

ALL ENGINES COME WITH RECOIL START AS STANDARD. ELECTRIC START CAN BE SPECIFIED ON REQUEST. YOUR BATTERY MOUNTING REQUIREMENTS CAN BE DISCUSSED WITH OUR SALES TEAM.

HOSE

TOP QUALITY GATES FLEXIBLE HOSE USED THROUGHOUT

LEVER VALVE WITH 3/8" 'A' & 'B' PORTS

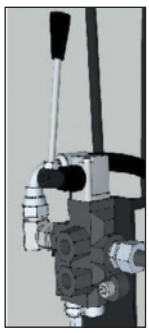

THE HDM140 DOUBLE ACTING 3 POSITION SPOOL VALVE IS 3/8"BSP PORTED AND PROVIDE A MAXIMUM FLOW RATE OF 40 L/MIN WITH SPRING RETURN TO NEUTRAL.

A RELIEF VALVE IS FITTED TO THE HDM140 AS STANDARD AND IS PRESET TO 150 BAR. DIFFERENT SPOOL AND POSITIONER CONFIGURATIONS CAN BE SPECIFIED UPON REQUEST.

SUCTION STRAINER

125 MICRON SUCTION STRAINER FITTED AS STANDARD TO ASIST IN KEEPING THE HYDRAULIC SYSTEM CLEAN. REDUCING WEAR AND MAINTENANCE COSTS.

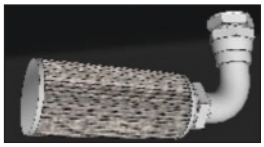

RETURN FILTER AND MANIFOLD

RETURN FILTER FITTED WITH 10 MICRON FIBREGLASS ELEMENT AND FILTER GAUGE TO INICATE WHEN REPLACEMENT IS DUE. MOUNTED DIRECTLY ONTO THE ACCESS MANIFOLD FOR EASE OF MAINTENANCE. MANIFOLD ALLOWS ACCESS TO THE INTERIOR OF THE TANK.

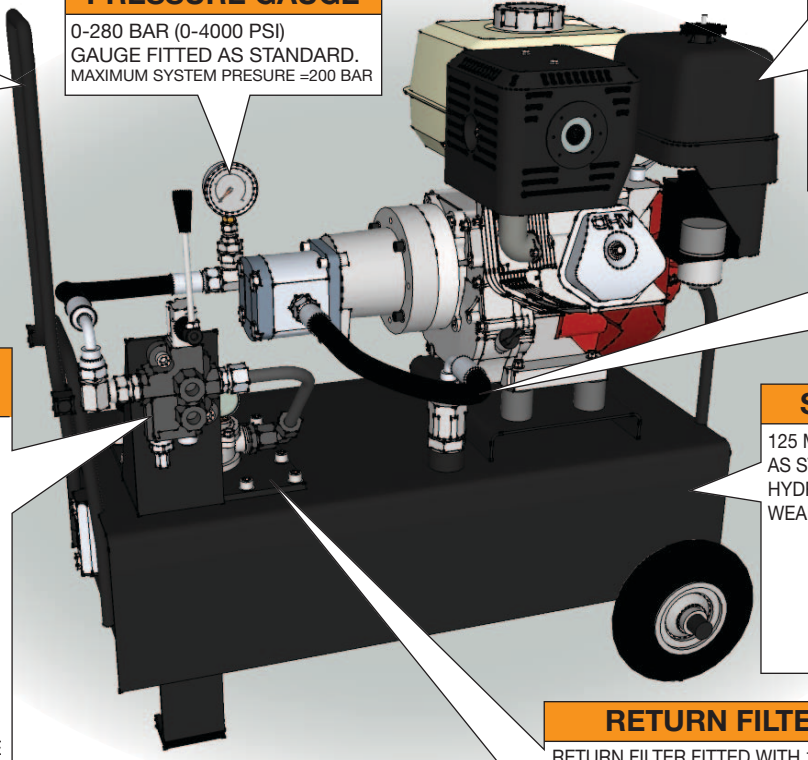

ENGINE

CHOICE OF HONDA AND LONCIN PETROL OR HATZ ENGINES

DAMPERS

40mm DAMPERS FITTED AS STANDARD TO REDUCE ENGINE VIBRATION AND NOISE LEVELS

HOSE

TOP QUALITY GATES FLEXIBLE HOSE USED THROUGHOUT

WHEEL ASSEMBLY

200mm WHEEL KIT WITH PNEUMATIC TYRES, FITTED AS STANDARD

TANK

50 LITRE TANK MANUFACTURED FROM 4mm SHEET STEEL FOR STURDY CONSTRUCTION, ENABLING OTHER COMPONENTS TO BE MOUNED DIRECTLY ON TO IT. THIS DESIGN PROVIDES A LOW CENTRE OF GRAVITY FOR ADDED STABILTY ON ROUGH TERRAIN.

FILLING POINT AND LEVEL READING

VISUAL LEVEL INDICATOR FITTED TO FILLER PORT.

OPERATES USING A FLOAT AND ARCHIMEDES SCREW.

LEVEL INDICATOR

SECONDARY LEVEL INDICATOR MOUNTED AT THE END OF TANK FOR ADDED PROTECTION

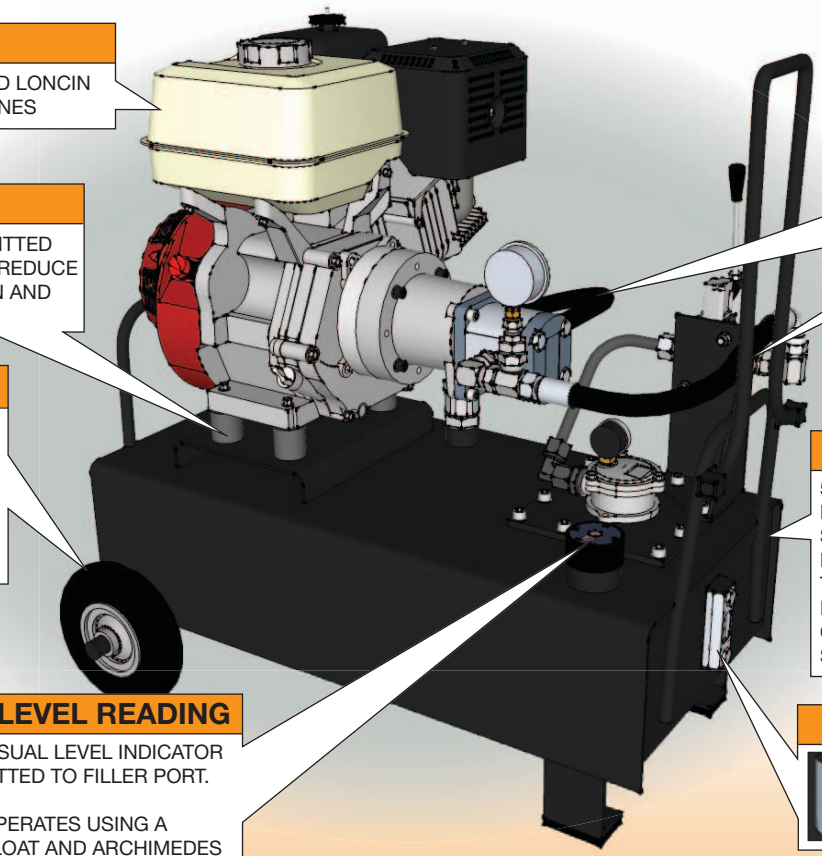

FLOWFIT MOBILE ENGINE DRIVEN HYDRAULIC POWER UNITS

FLOWFIT HONDA PETROL POWER UNIT (RECOIL START) with LEVER VALVE

PRODUCT REFERENCE	DESCRIPTION	RRP
ZZ004422	GX390FQ 13HP HONDA PETROL ENGINE PORTABLE UNIT 25.5L/MIN 210BAR RECOIL START (WITH LEVER VALVE)	£3524.50
ZZ004423	GX270FQ 9.5HP HONDA PETROL ENGINE PORTABLE UNIT 19.5L/MIN 200BAR RECOIL START (WITH LEVER VALVE)	£3148.20
ZZ004424	GX160FQ 5.5HP HONDA PETROL ENGINE PORTABLE UNIT 10.5L/MIN 200BAR RECOIL START (WITH LEVER VALVE)	£2463.44

FLOWFIT LONCIN PETROL POWER UNIT (RECOIL START) with LEVER VALVE

PRODUCT REFERENCE	DESCRIPTION	RRP
ZZ004425	G390F-P 13HP LONCIN PETROL ENGINE PORTABLE UNIT 25.5L/MIN 210BAR RECOIL START (WITH LEVER VALVE)	£2779.32
ZZ004426	G270F-P 9HP LONCIN PETROL ENGINE PORTABLE UNIT 19.5L/MIN 200BAR RECOIL START (WITH LEVER VALVE)	£2448.60
ZZ004427	G160F-P 5.5HP LONCIN PETROL ENGINE PORTABLE UNIT 10.5L/MIN 200BAR RECOIL START (WITH LEVER VALVE)	£2012.94

CETOP 3 VALVES • SECTION NP3

FLOWFIT CETOP 3 VALVES

FLOWFIT CETOP 3 NG6 SOLENOID DIRECTIONAL CONTROL VALVES NP32
FLOWFIT CETOP 3 NG6 MODULAR RELIEF VALVE NP36
FLOWFIT CETOP 3 NG6 MODULAR REDUCING VALVE NP38
FLOWFIT CETOP 3 NG6 MODULAR CHECK VALVE NP40
FLOWFIT CETOP 3 NG6 MODULAR PILOT OPERATED CHECK VALVE NP42
FLOWFIT CETOP 3 NG6 MODULAR FLOW CONTROL VALVE WITH CHECK NP44
FLOWFIT CETOP 3 NG6 MODULAR COUNTER BALANCE VALVE NP46
FLOWFIT CETOP 3 NG6 STEEL PARALLEL CIRCUIT MANIFOLD NP48
FLOWFIT CETOP 3 NG6 STEEL PARALLEL CIRCUIT MANIFOLD WITH RELIEF VALVE NP50
FLOWFIT CETOP 3 NG6 STEEL SUBPLATE WITH SIDE PORTS NP52
FLOWFIT CETOP 3 NG6 STEEL SUBPLATE WITH BASE PORTS NP53
FLOWFIT CETOP 3 NG6 STEEL COVER PLATE NP54

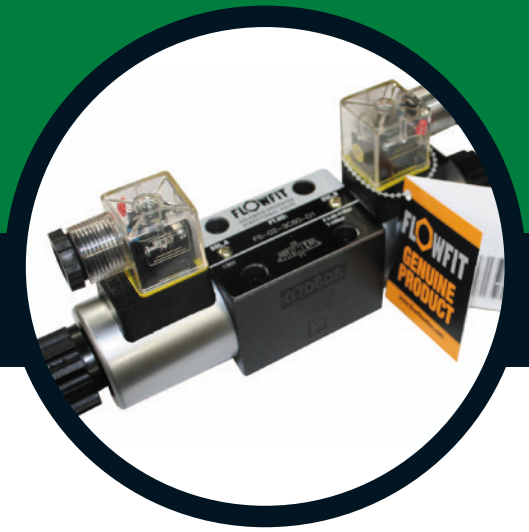

FLOWFIT®

FLOWFIT CETOP 3 NG6 SOLENOID DIRECTIONAL CONTROL VALVES

FLOWFIT CETOP 3 NG6 SOLENOID DIRECTIONAL CONTROL VALVE

Flowfit offer a large range of solenoid operated CETOP 3 NG6 with a maximum flow of 80 l/min, commonly used in powerpacks and other hydraulic applications. Available in 12VDC, 24VDC, 110VAC and 220VAC.

Flowfit F5-02 series CETOP 3 NG6 solenoid valves are Electro-Hydraulic spool type valves. They are solenoid operated and control the start, stop and direction of the oil flow in the hydraulic circuit.

They are used for hydraulic powerpacks as well as for stand alone hydraulic manifold blocks.

SPECIFICATION

Nominal Size: NG6
Maximum Flow Rate: 80 l/min
Maximum Pressure: A,B,P = 315 Bar T = 16 Bar
Seal Material:- NBR
Max Fluid Temperature: -20° to 70°C
Oil Viscosity: -2.8 to 380 mm2/s
Switch Cycles **Open:** 50 ~ 60ms
Closed: 50 ~ 70ms
Switch Frequency: 15000 times per hour
Insulation Grade: IP65
Weight: Single Solenoid: 1.5kg,
Double Solenoid: 2.2kg
Voltages: 12VDC = D1, 24VDC = D2,
110V/AC 50HZ = A1, 220V/AC 50HZ = A2
Manual Override: Standard on all valves
Connector Type: DIN Plug (with LED)

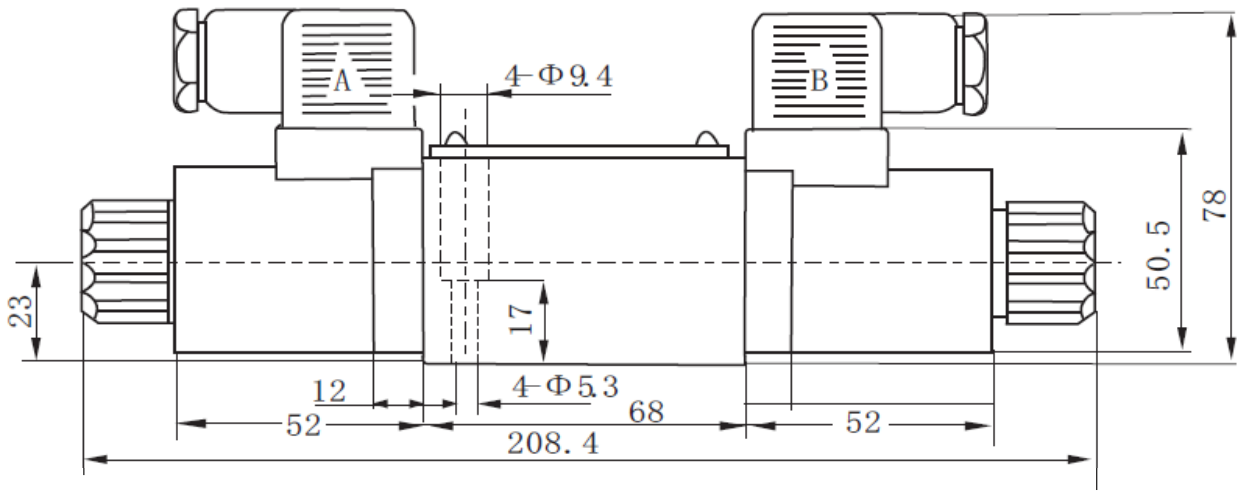

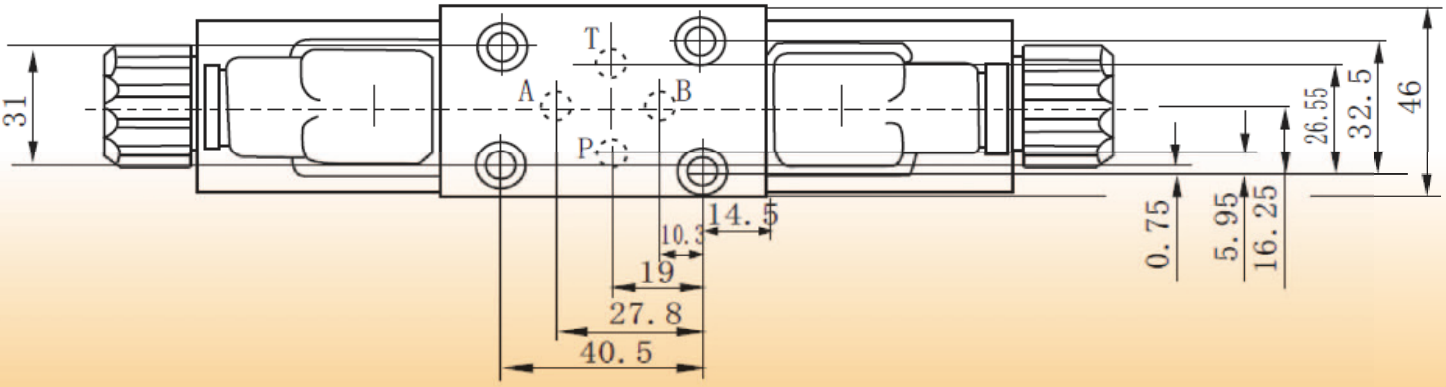

FLOWFIT CETOP 3 NG6 SOLENOID DIRECTIONAL CONTROL VALVES

BASE PORT DIMENSIONS

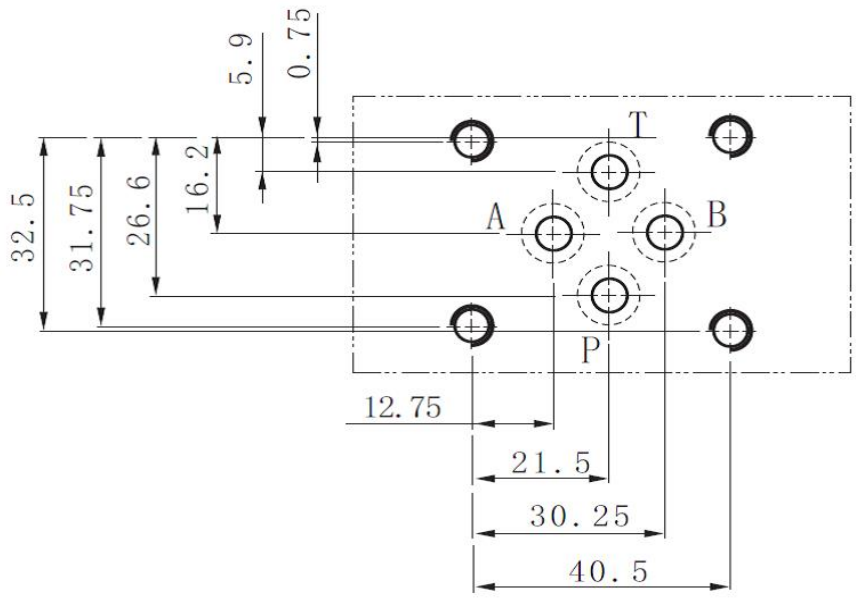

CHARACTERISTIC CURVES (measured at v=41mm²/s and t=50℃)

CETOP 3 (Nominal Size: NG6)

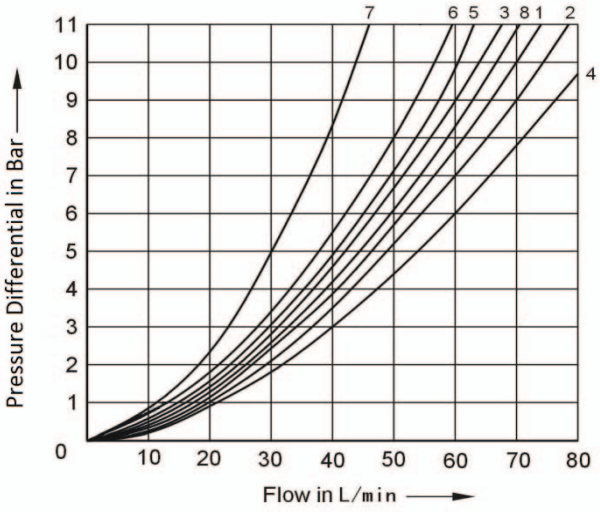

Spool Type	Flow Direction				
	P - A	P - B	A - T	B - T	P - T
2B2	5	5	3	3	_
2B3	1	1	3	1	_
3C2	3	3	1	1	_
3C3	2	4	2	2	_
3C4	1	1	2	1	_
3C5	1	3	1	1	_
3C9	2	4	3	3	_
3C10	3	3	8	4	_
3C12	3	3	4	8	_
3C25	3	1	1	1	_
3C40	1	1	2	2	_
3C60	6	6	8	8	7

Spool Type	Flow Direction				
	P - A	P - B	A - T	B - T	P - T
2B2A	3	_	_	1	_
2B2AL	_	3	1	_	_
2B2B	_	3	1	_	_
2B2BL	3	_	_	1	_
2B3A	2	_	_	2	_
2B3AL	_	4	2	_	_
2B3B	_	4	2	_	_
2B3BL	2	_	_	2	_
2B4B	_	1	2	1	_
2B4BL	1	_	2	1	_
2B5B	1	_	_	1	_
2B5BL	_	3	1	_	_

Spool Type	Flow Direction				
	P - A	P - B	A - T	B - T	P - T
2B9B	_	4	3	_	_
2B9BL	2	_	_	3	_
2B10B	_	3	8	_	_
2B10BL	3	_	_	4	_
2B12B	_	3	4	_	_
2B12BL	3	_	_	8	_
2B25B	3	1	_	1	_
2B25BL	_	1	1	1	_
2B40B	_	1	2	_	_
2B40BL	1	_	_	2	_
2B60B	6	_	_	8	7
2B60BL	_	6	8	_	7

FLOWFIT CETOP 3 NG6 SOLENOID DIRECTIONAL CONTROL VALVES

CETOP 3 NG6 PRICE LIST

FLOWFIT CETOP 3 NG6 SPRING CENTERED 3 POSITION DOUBLE ACTING SOLENOID DIRECTIONAL CONTROL VALVE

PRODUCT REFERENCE	SINGLE/DOUBLE SOLENOID	CONFIGURATION	SPOOL RETURN	RRP
F5-02-3C2-**	DOUBLE	3 POSITION	SPRING	£82.68
F5-02-3C3-**	DOUBLE	3 POSITION	SPRING	£82.68
F5-02-3C4-**	DOUBLE	3 POSITION	SPRING	£82.68
F5-02-3C5-**	DOUBLE	3 POSITION	SPRING	£82.68
F5-02-3C9-**	DOUBLE	3 POSITION	SPRING	£82.68
F5-02-3C10-**	DOUBLE	3 POSITION	SPRING	£82.68
F5-02-3C11-**	DOUBLE	3 POSITION	SPRING	£82.68
F5-02-3C12-**	DOUBLE	3 POSITION	SPRING	£82.68
F5-02-3C25-**	DOUBLE	3 POSITION	SPRING	£82.68
F5-02-3C40-**	DOUBLE	3 POSITION	SPRING	£82.68
F5-02-3C60-**	DOUBLE	3 POSITION	SPRING	£82.68

NOTE: SUBSTITUTE THE ** WITH VOLTAGE PREFERENCE.
12VDC=D1, 24VDC=D2, 110V/AC 50HZ=A1, 220V/AC 50HZ=A2

FLOWFIT CETOP 3 NG6 SPRING OFFSET 2 POSITION SINGLE ACTING SOLENOID DIRECTIONAL CONTROL VALVE

PRODUCT REFERENCE	SINGLE/DOUBLE SOLENOID	CONFIGURATION	SPOOL RETURN	RRP
F5-02-2B2-**	SINGLE	2 POSITION	SPRING	£61.48
F5-02-2B2L-**	SINGLE	2 POSITION	SPRING	£61.48
F5-02-2B2A-**	SINGLE	2 POSITION	SPRING	£61.48
F5-02-2B2AL-**	SINGLE	2 POSITION	SPRING	£61.48
F5-02-2B2B-**	SINGLE	2 POSITION	SPRING	£61.48
F5-02-2B2BL-**	SINGLE	2 POSITION	SPRING	£61.48
F5-02-2B3-**	SINGLE	2 POSITION	SPRING	£61.48
F5-02-2B3L-**	SINGLE	2 POSITION	SPRING	£61.48
F5-02-2B3A-**	SINGLE	2 POSITION	SPRING	£61.48
F5-02-2B3AL-**	SINGLE	2 POSITION	SPRING	£61.48
F5-02-2B3B-**	SINGLE	2 POSITION	SPRING	£61.48
F5-02-2B3BL-**	SINGLE	2 POSITION	SPRING	£61.48
F5-02-2B4B-**	SINGLE	2 POSITION	SPRING	£61.48
F5-02-2B4BL-**	SINGLE	2 POSITION	SPRING	£61.48
F5-02-2B5B-**	SINGLE	2 POSITION	SPRING	£61.48
F5-02-2B5BL-**	SINGLE	2 POSITION	SPRING	£61.48
F5-02-2B8-**	SINGLE	2 POSITION	SPRING	£61.48
F5-02-2B8L-**	SINGLE	2 POSITION	SPRING	£61.48
F5-02-2B9B-**	SINGLE	2 POSITION	SPRING	£61.48
F5-02-2B9BL-**	SINGLE	2 POSITION	SPRING	£61.48
F5-02-2B10B-**	SINGLE	2 POSITION	SPRING	£61.48
F5-02-2B10BL-**	SINGLE	2 POSITION	SPRING	£61.48
F5-02-2B11B-**	SINGLE	2 POSITION	SPRING	£61.48
F5-02-2B11BL-**	SINGLE	2 POSITION	SPRING	£61.48
F5-02-2B12A-**	SINGLE	2 POSITION	SPRING	£61.48
F5-02-2B12AL-**	SINGLE	2 POSITION	SPRING	£61.48
F5-02-2B12B-**	SINGLE	2 POSITION	SPRING	£61.48

FLOWFIT CETOP 3 NG6 SOLENOID DIRECTIONAL CONTROL VALVES

FLOWFIT®

SPRING CENTERED 3 POSITION SOLENOID DIRECTIONAL CONTROL VALVE				
PRODUCT REFERENCE	**SINGLE/DOUBLE SOLENOID**	**CONFIGURATION**	**SPOOL RETURN**	**RRP**
F5-02-2B12BL-**	SINGLE	2 POSITION	SPRING	£61.48
F5-02-2B25B-**	SINGLE	2 POSITION	SPRING	£61.48
F5-02-2B25BL-**	SINGLE	2 POSITION	SPRING	£61.48
F5-02-2B40B-**	SINGLE	2 POSITION	SPRING	£61.48
F5-02-2B40BL-**	SINGLE	2 POSITION	SPRING	£61.48
F5-02-2B60B-**	SINGLE	2 POSITION	SPRING	£61.48
F5-02-2B60BL-**	SINGLE	2 POSITION	SPRING	£61.48

NOTE: SUBSTITUTE THE ** WITH VOLTAGE PREFERENCE.
12VDC=D1, 24VDC=D2, 110V/AC 50HZ=A1, 220V/AC 50HZ=A2

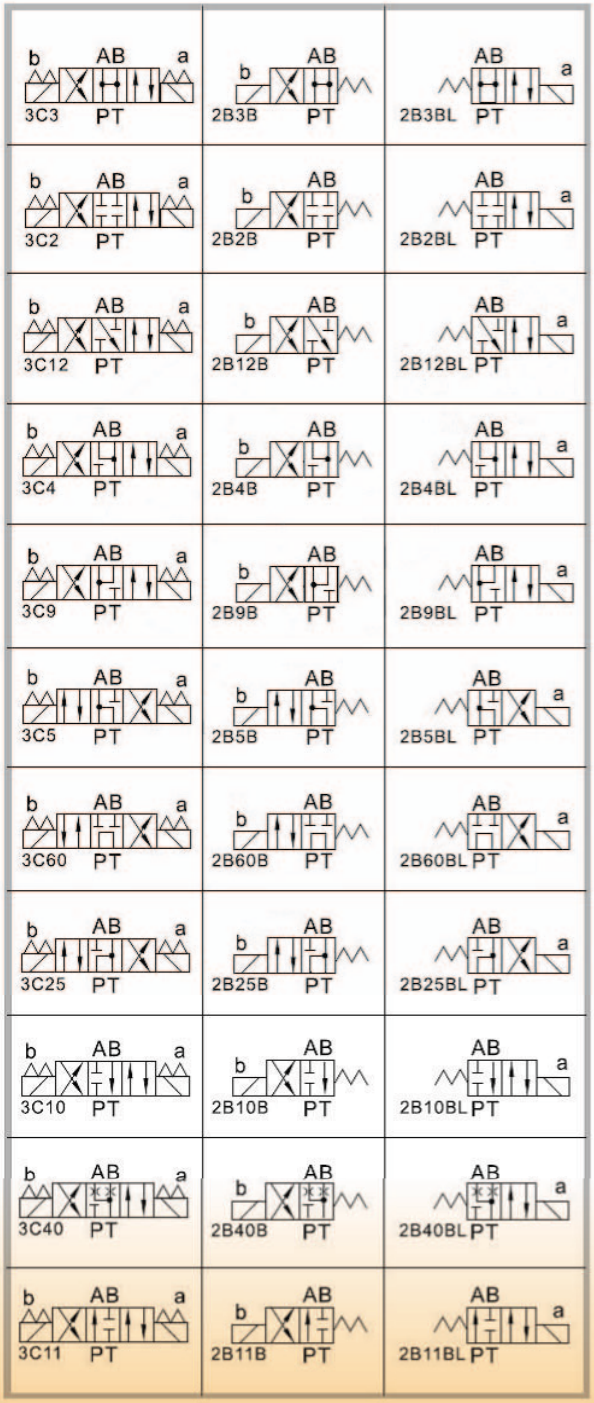

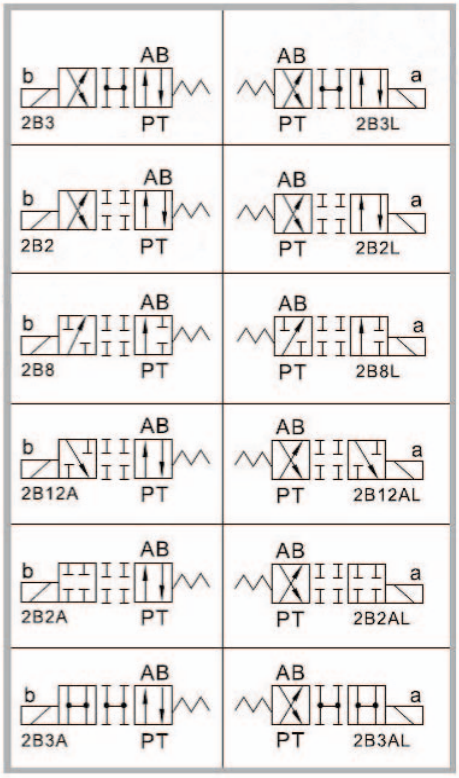

FLOWFIT CETOP 3 NG6 MODULAR RELIEF VALVE

FLOWFIT CETOP 3 NG6 MODULAR RELIEF VALVE

The Flowfit CETOP 3 NG6 Modular Relief Valve is available in a variety of configurations to control pressure in either the P, A or B ports.

There are three pressure ranges to choose from, providing the versatility to control system pressure in any application.

Pressure can be adjusted using the plastic knob (standard on all modular relief valves) but for added security, valves can also be supplied with an adjustment screw that can be locked once pressure has been set (Available upon request).

The pressure ranges available are:
8 - 70bar
35 - 140bar
70 - 250bar

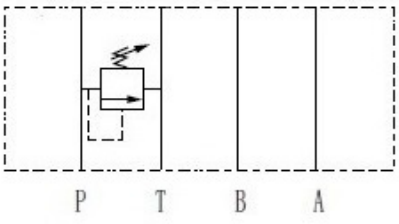

FFRV-P

SPECIFICATION

Nominal Size: NG6
Maximum Flow Rate: 35 l/min
Maximum Pressure: 250 Bar
Seal Material:- NBR
Max Fluid Temperature: -20° to 70°C
Oil Viscosity: -2.8 to 380 mm2/s
Weight P, A, B: 1.5kg
C: 1.7kg
Manual Adjustment: Standard on all valves

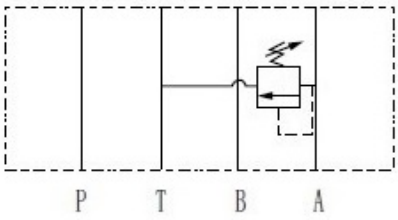

FFRV-A

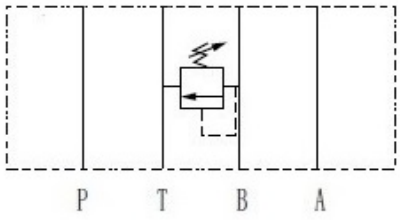

FFRV-B

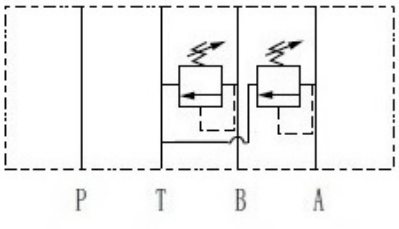

FFRV-C

DIMENSIONS

UNIT.mm

FFRV-02A

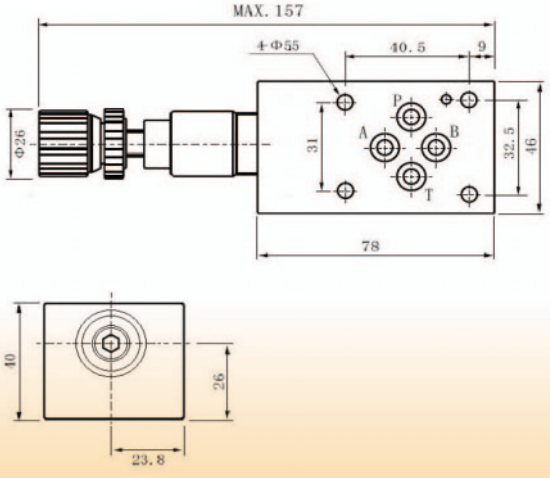

FFRV-02C

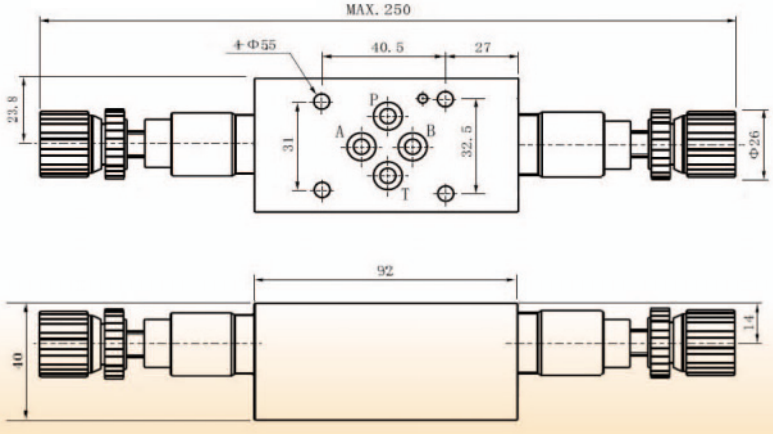

FLOWFIT CETOP 3 NG6 MODULAR RELIEF VALVE

FFRV-02B/P

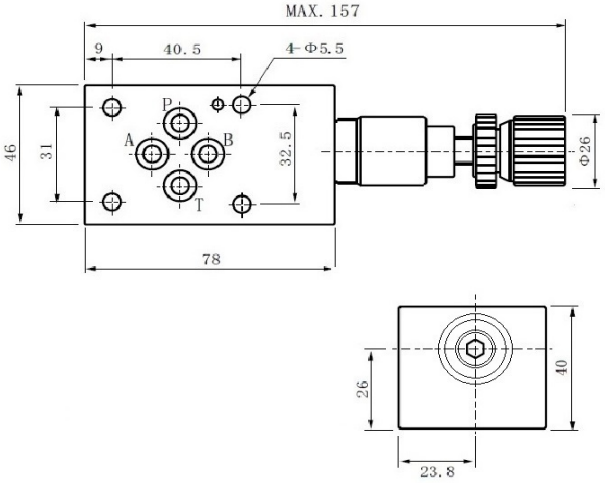

Mounting size

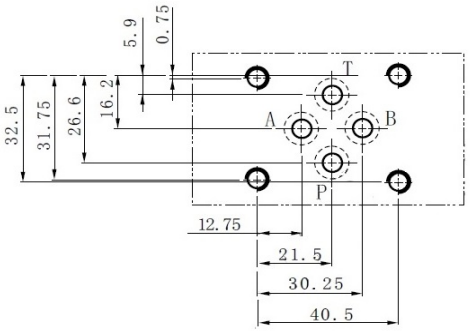

CETOP 3 NG6 MODULAR RELIEF VALVE PRICE LIST		
PRODUCT REFERENCE	**SINGLE/DOUBLE SOLENOID**	**RRP**
FFRV-02P-K-1-20	CETOP 3 MODULAR RELIEF VALVE 8-70BAR ON P	£69.96
FFRV-02P-K-2-20	CETOP 3 MODULAR RELIEF VALVE 35-140BAR ON P	£69.96
FFRV-02P-K-3-20	CETOP 3 MODULAR RELIEF VALVE 70-250BAR ON P	£69.96
FFRV-02A-K-1-20	CETOP 3 MODULAR RELIEF VALVE 8-70BAR ON A	£69.96
FFRV-02A-K-2-20	CETOP 3 MODULAR RELIEF VALVE 35-140BAR ON A	£69.96
FFRV-02A-K-3-20	CETOP 3 MODULAR RELIEF VALVE 70-250BAR ON A	£69.96
FFRV-02B-K-1-20	CETOP 3 MODULAR RELIEF VALVE 8-70BAR ON B	£69.96
FFRV-02B-K-2-20	CETOP 3 MODULAR RELIEF VALVE 35-140BAR ON B	£69.96
FFRV-02B-K-3-20	CETOP 3 MODULAR RELIEF VALVE 70-250BAR ON B	£69.96
FFRV-02C-K-1-20	CETOP 3 MODULAR RELIEF VALVE 8-70BAR ON A+B	£98.58
FFRV-02C-K-2-20	CETOP 3 MODULAR RELIEF VALVE 35-140BAR ON A+B	£98.58
FFRV-02C-K-3-20	CETOP 3 MODULAR RELIEF VALVE 70-250BAR ON A+B	£98.58

FLOWFIT CETOP 3 NG6 MODULAR REDUCING VALVE

FLOWFIT CETOP 3 NG6 MODULAR REDUCING VALVE

The Flowfit modular reducing valve is designed to lower the pressure in a specific circuit compared to the main system pressure.

There are three pressure ranges to choose from, providing the versatility to control individual circuit pressure.

Pressure can be adjusted using the plastic knob (standard on all modular reducing valves) but for added security, valves can also be supplied with an adjustment screw that can be locked once pressure has been set (Available upon request).

The pressure ranges available are:
8 - 70bar
35 - 140bar
70 - 250bar

SPECIFICATION

Nominal Size: NG6
Maximum Flow Rate: 35 l/min
Maximum Pressure: 250 Bar
Seal Material:- NBR
Max Fluid Temperature: -20° to 70°C
Oil Viscosity: -2.8 to 380 mm2/s
Weight: 1.2kg
Manual Adjustment: Standard on all valves

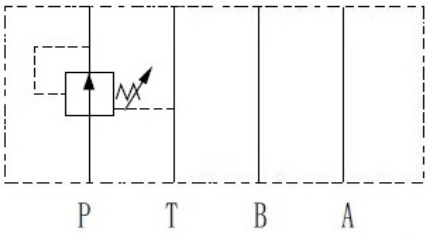

FFBRV-P

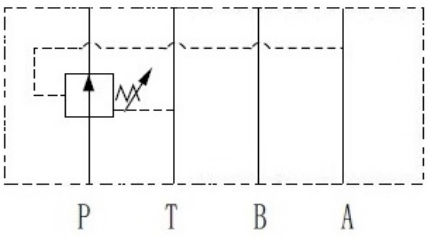

FFBRV-A

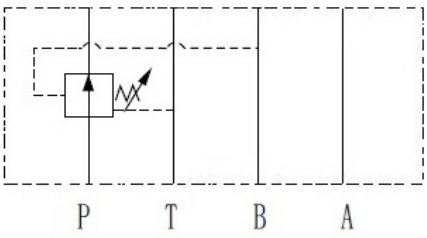

FFBRV-B

DIMENSIONS

UNIT.mm

FFBRV-02A/P

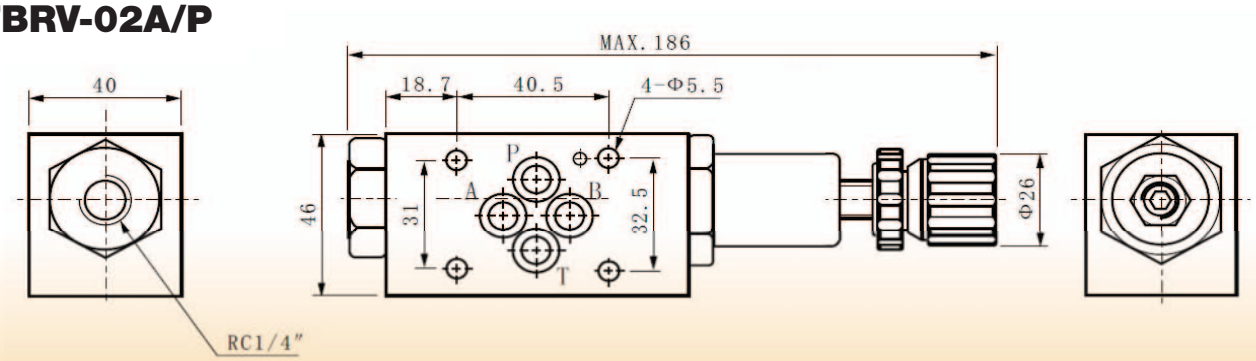

50% OFF ALL PRICES

FLOWFIT CETOP 3 NG6 MODULAR REDUCING VALVE

DIMENSIONS

UNIT.mm

FFBRV-02B

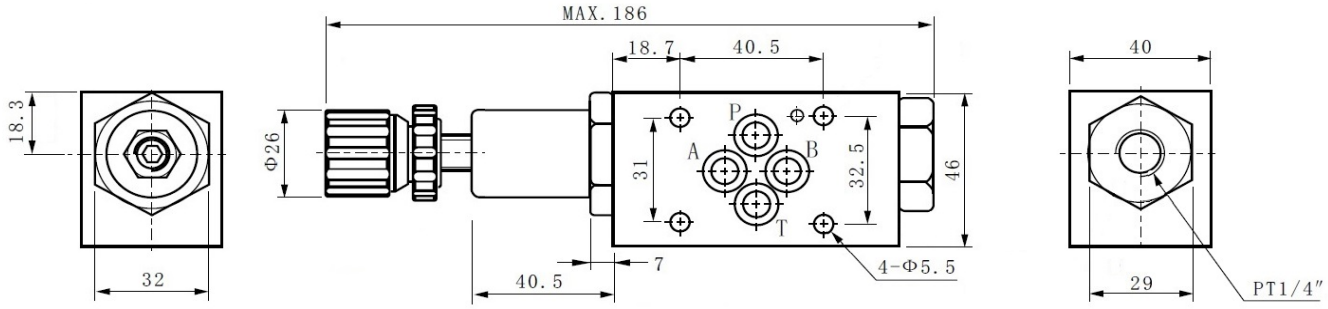

Mounting size

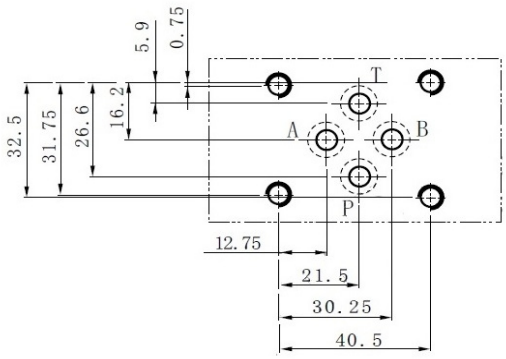

CETOP 3 NG6 MODULAR REDUCING VALVE PRICE LIST		
PRODUCT REFERENCE	**DESCRIPTION**	**RRP**
FFBRV-02P-K-1-20	CETOP 3 MODULAR REDUCING VALVE 8-70BAR ON P	£69.96
FFBRV-02P-K-2-20	CETOP 3 MODULAR REDUCING VALVE 35-140BAR ON P	£69.96
FFBRV-02P-K-3-20	CETOP 3 MODULAR REDUCING VALVE 70-250BAR ON P	£69.96
FFBRV-02A-K-1-20	CETOP 3 MODULAR REDUCING VALVE 8-70BAR ON A	£69.96
FFBRV-02A-K-2-20	CETOP 3 MODULAR REDUCING VALVE 35-140BAR ON A	£69.96
FFBRV-02A-K-3-20	CETOP 3 MODULAR REDUCING VALVE 70-250BAR ON A	£69.96
FFBRV-02B-K-1-20	CETOP 3 MODULAR REDUCING VALVE 8-70BAR ON B	£69.96
FFBRV-02B-K-2-20	CETOP 3 MODULAR REDUCING VALVE 35-140BAR ON B	£69.96
FFBRV-02B-K-3-20	CETOP 3 MODULAR REDUCING VALVE 70-250BAR ON B	£69.96

FLOWFIT CETOP 3 NG6 MODULAR CHECK VALVE

FLOWFIT CETOP 3 NG6 MODULAR CHECK VALVE

The Flowfit modular check valve allows free flow in one direction and blocks the flow in the oposite direction.

Flowfit check valves are available for the A, B, P or T port and can be specified with a cracking pressure of 0.35bar or 3.5bar depending on the system requirements.

SPECIFICATION

Nominal Size: NG6
Maximum Flow Rate: 35 l/min
Maximum Pressure: 250 Bar
Seal Material:- NBR
Max Fluid Temperature: -20° to 70°C
Oil Viscosity: -2.8 to 380 mm2/s
Weight: 1.2kg
Manual Adjustment: Standard on all valves

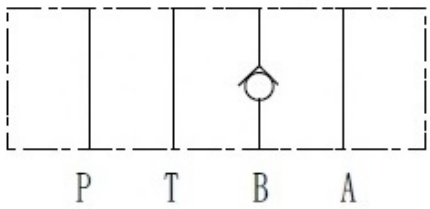

FFC-02B

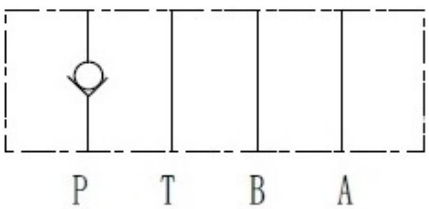

FFC-02P

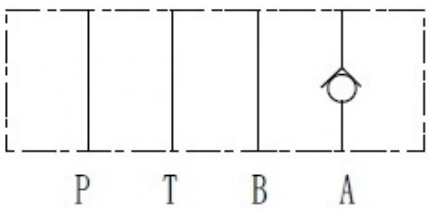

FFC-02A

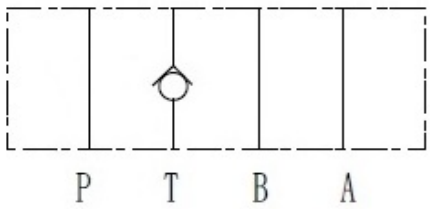

FFC-02T

FFC-02P/T/B

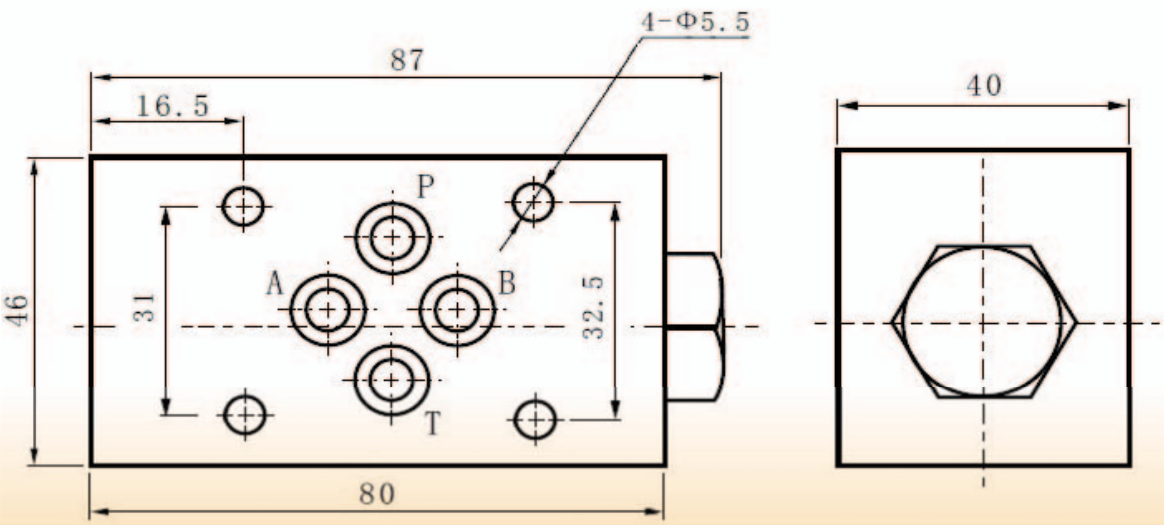

FLOWFIT CETOP 3 NG6 MODULAR CHECK VALVE

FFC-02A

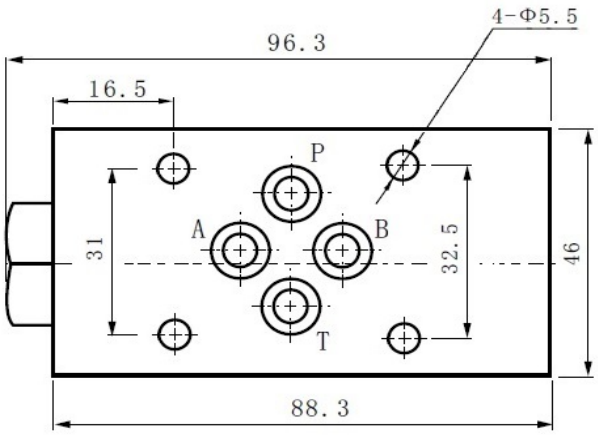

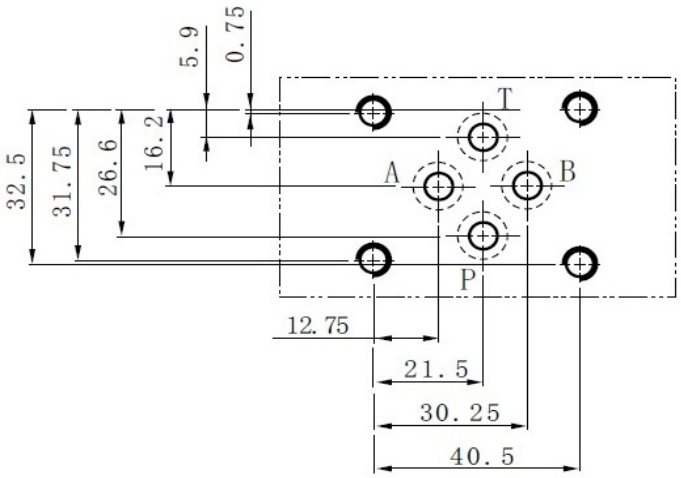

CETOP 3 NG6 MODULAR CHECK VALVE PRICE LIST		
PRODUCT REFERENCE	**DESCRIPTION**	**RRP**
FFC-02P-05-20	CETOP 3 MODULAR CHECK VALVE C/P 0.35BAR ON P	£57.24
FFC-02P-50-20	CETOP 3 MODULAR CHECK VALVE C/P 3.5BAR ON P	£57.24
FFC-02A-05-20	CETOP 3 MODULAR CHECK VALVE C/P 0.35BAR ON A	£57.24
FFC-02A-50-20	CETOP 3 MODULAR CHECK VALVE C/P 3.5BAR ON A	£57.24
FFC-02B-05-20	CETOP 3 MODULAR CHECK VALVE C/P 0.35BAR ON B	£57.24
FFC-02B-50-20	CETOP 3 MODULAR CHECK VALVE C/P 3.5BAR ON B	£57.24
FFC-02T-05-20	CETOP 3 MODULAR CHECK VALVE C/P 0.35BAR ON T	£57.24
FFC-02T-50-20	CETOP 3 MODULAR CHECK VALVE C/P 3.5BAR ON T	£57.24

FLOWFIT CETOP 3 NG6 MODULAR PILOT OPERATED CHECK VALVE

FLOWFIT CETOP 3 NG6 MODULAR PILOT OPERATED CHECK VALVE

The Flowfit modular pilot operated (P/O) check valve allows free flow in one direction and pilot pressure allows flow in the opposite direction.

Flowfit pilot operated check valves are available for the A or B ports individually, or the A and B ports combined. They can be specified with a cracking pressure of 0.35bar or 3.5bar depending on the system requirements

SPECIFICATION

Nominal Size: NG6
Maximum Flow Rate: 35 l/min
Maximum Pressure: 250 Bar
Seal Material:- NBR
Max Fluid Temperature: -20° to 70°C
Oil Viscosity: -2.8 to 380 mm2/s
Weight: 1.1kg

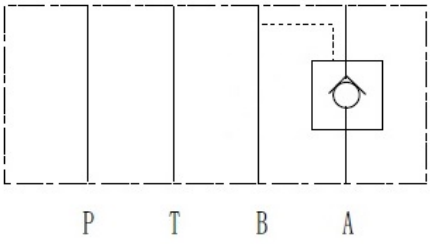

FFPCV-02A

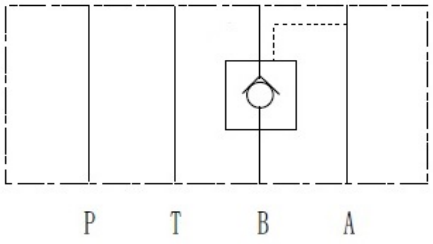

FFPCV-02B

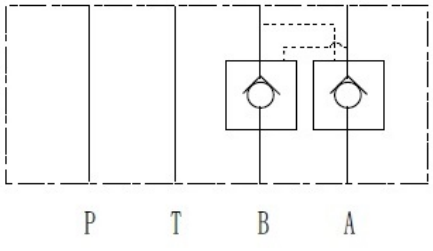

FFPCV-02W

DIMENSIONS

UNIT.mm

FFPCV-02

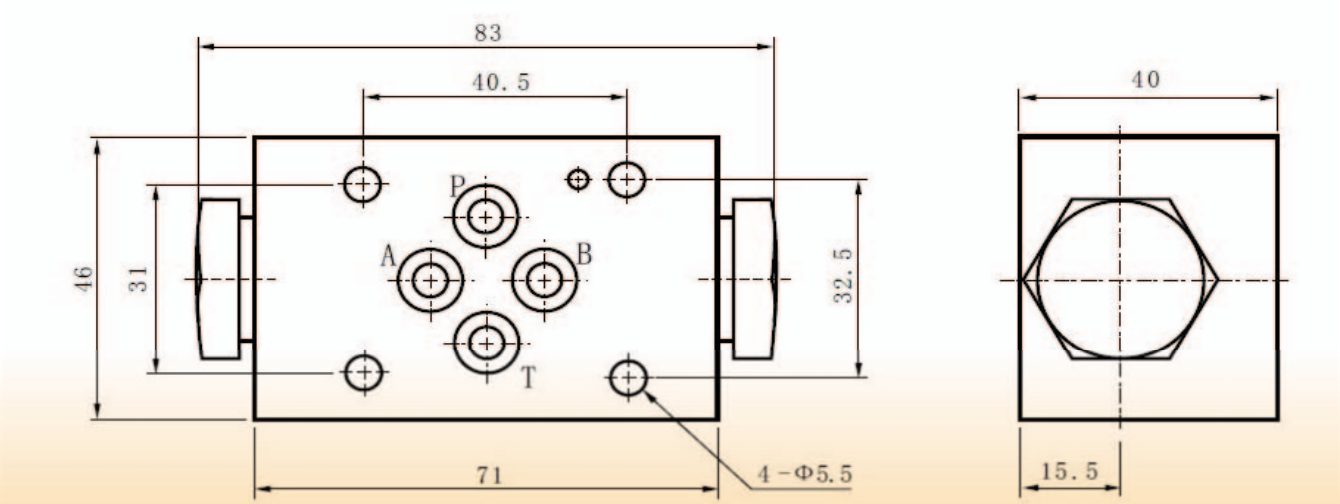

FLOWFIT CETOP 3 NG6 MODULAR PILOT OPERATED CHECK VALVE

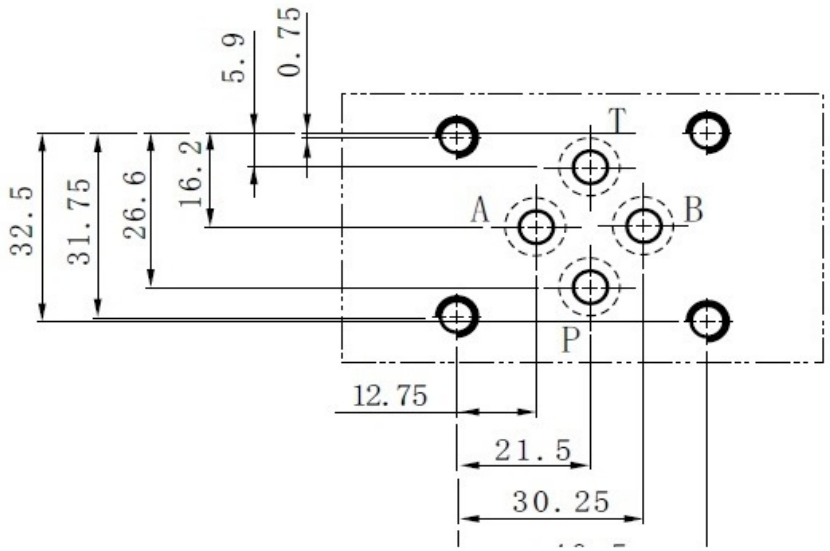

CETOP 3 NG6 MODULAR PILOT OPERATED CHECK VALVE PRICE LIST		
PRODUCT REFERENCE	**DESCRIPTION**	**RRP**
FFPCV-02A-05-20	CETOP 3 MODULAR P/O CHECK VALVE C/P 0.35BAR ON A	£63.60
FFPCV-02A-50-20	CETOP 3 MODULAR P/O CHECK VALVE C/P 3.5BAR ON A	£63.60
FFPCV-02B-05-20	CETOP 3 MODULAR P/O CHECK VALVE C/P 0.35BAR ON B	£63.60
FFPCV-02B-50-20	CETOP 3 MODULAR P/O CHECK VALVE C/P 3.5BAR ON B	£66.78
FFPCV-02W-05-20	CETOP 3 MODULAR P/O CHECK VALVE C/P 0.35BAR ON A AND B	£66.78
FFPCV-02W-50-20	CETOP 3 MODULAR P/O CHECK VALVE C/P 3.5BAR ON A AND B	£66.78

FLOWFIT CETOP 3 NG6 MODULAR FLOW CONTROL VALVE WITH CHECK

FLOWFIT CETOP 3 NG6 MODULAR FLOW CONTROL VALVE WITH CHECK

The Flowfit modular flow control valves regulate the flow of oil through the circuit in one direction whilst allowing free flow in the opposite direction using a check valve.

Two types of valve are available; the first meters the flow of oil into the circuit (allowing free flow out), while the second meters the flow out of the circuit (allowing free flow in).

Flow on the metered side can be adjusted using the plastic knob (standard on all modular flow control valves) but for added security, valves can also be supplied with an adjustment screw that can be locked once the desired flow has been set (Available upon request).

SPECIFICATION

Nominal Size: NG6
Maximum Flow Rate: 35 l/min
Maximum Pressure: 250 Bar
Seal Material:- NBR
Max Fluid Temperature: -20° to 70°C
Oil Viscosity: -2.8 to 380 mm2/s
Weight: A, B 1.2kg
W 1.4kg
Manual Adjustment: Standard on all valves

METERED OUT

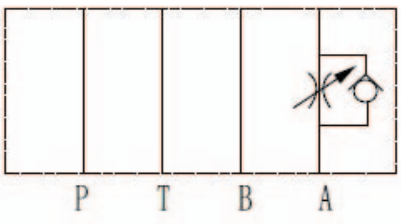

FFTCV-02A-K-20

METERED IN

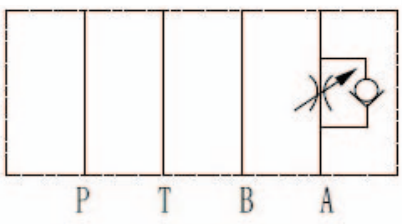

FFTCV-02A-K-I-20

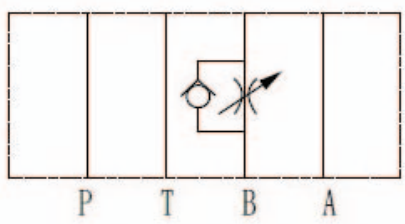

FFTCV-02B-K-20

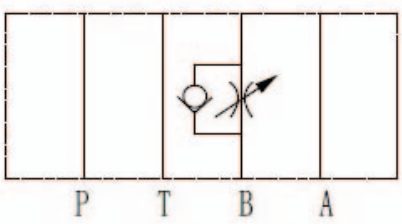

FFTCV-02B-K-I-20

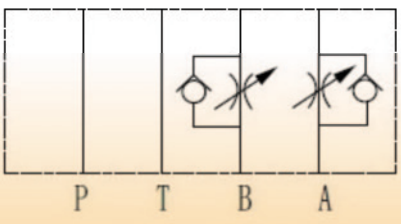

FFTCV-02W-K-20

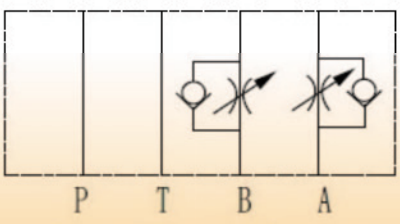

FFTCV-02W-K-I-20

FLOWFIT CETOP 3 NG6 MODULAR FLOW CONTROL VALVE WITH CHECK

DIMENSIONS

UNIT.mm

FFTCV-02A

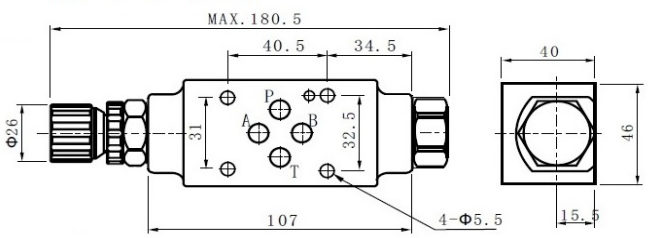

FFTCV-02B

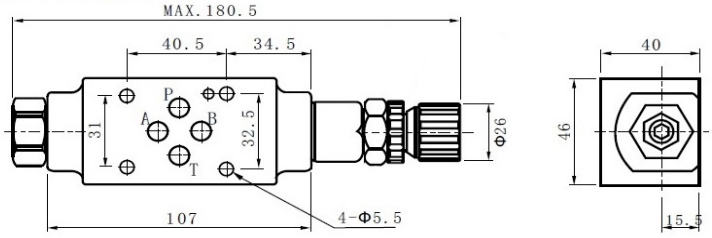

FFTCV-02W

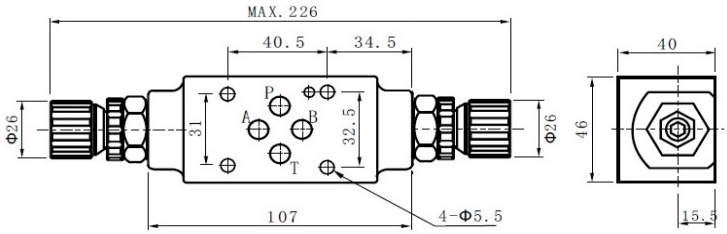

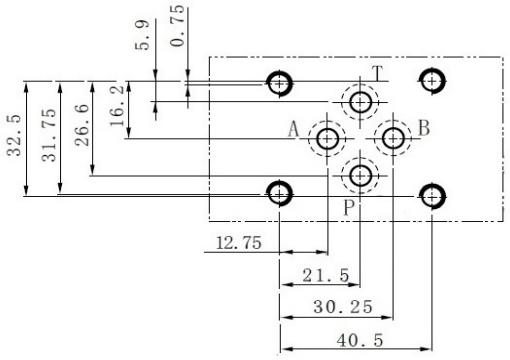

CETOP 3 NG6 MODULAR FLOW CONTROL VALVE PRICE LIST		
PRODUCT REFERENCE	**DESCRIPTION**	**RRP**
FFTCV-02A-K-20	CETOP 3 MODULAR FLOW CONTROL VALVE MTR OUT ON A PORT	£69.96
FFTCV-02A-K-I-20	CETOP 3 MODULAR LFOW CONTROL VALVE MTR IN ON A PORT	£69.96
FFTCV-02B-K-20	CETOP 3 MODULAR FLOW CONTROL VALVE MTR OUT ON B PORT	£69.96
FFTCV-02B-K-I-20	CETOP 3 MODULAR LFOW CONTROL VALVE MTR IN ON B PORT	£69.96
FFTCV-02W-K-20	CETOP 3 MODULAR FLOW CONTROL VALVE MTR OUT ON A+B PORT	£76.32
FFTCV-02W-K-I-20	CETOP 3 MODULAR LFOW CONTROL VALVE MTR IN ON A+B PORT	£76.32

FLOWFIT CETOP 3 NG6 MODULAR COUNTER BALANCE VALVE

BRAND NEW PRODUCT
PLEASE SEE OUR WEBSITE FOR PHOTOGRAPHS

FLOWFIT CETOP 3 NG6 MODULAR COUNTER BALANCE VALVE

The Flowfit modular counter balance valve is designed to equalize the pressure in a sepcific line of a hydraulic system.

Pressure can be adjusted using the plastic knob (standard on all modular counter balance valves) but for added security, valves can also be supplied with an adjustment screw that can be locked once pressure has been set (Available upon request).

The pressure ranges available are:
8 - 70bar
35 - 140bar
70 - 250bar

SPECIFICATION

Nominal Size: NG6
Maximum Flow Rate: 35 l/min
Maximum Pressure: 250 Bar
Seal Material:- NBR
Max Fluid Temperature: -20° to 70°C
Oil Viscosity: -2.8 to 380 mm2/s
Weight: 1.5kg
Manual Adjustment: Standard on all valves

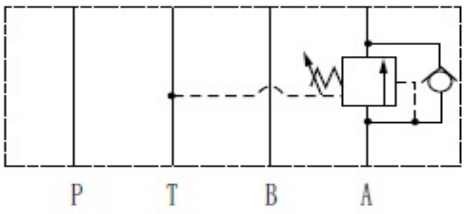

FFCS-02A

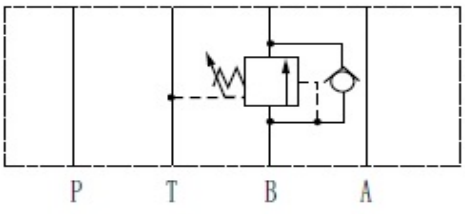

FFCS-02B

DIMENSIONS

FFCS-02A

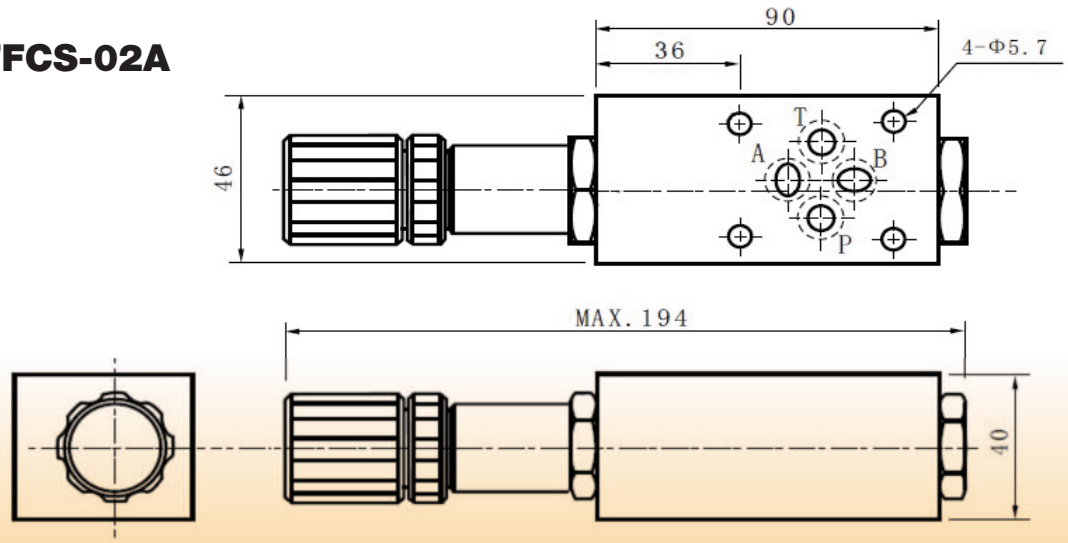

FLOWFIT CETOP 3 NG6 MODULAR COUNTER BALANCE VALVE

FFCS-02B

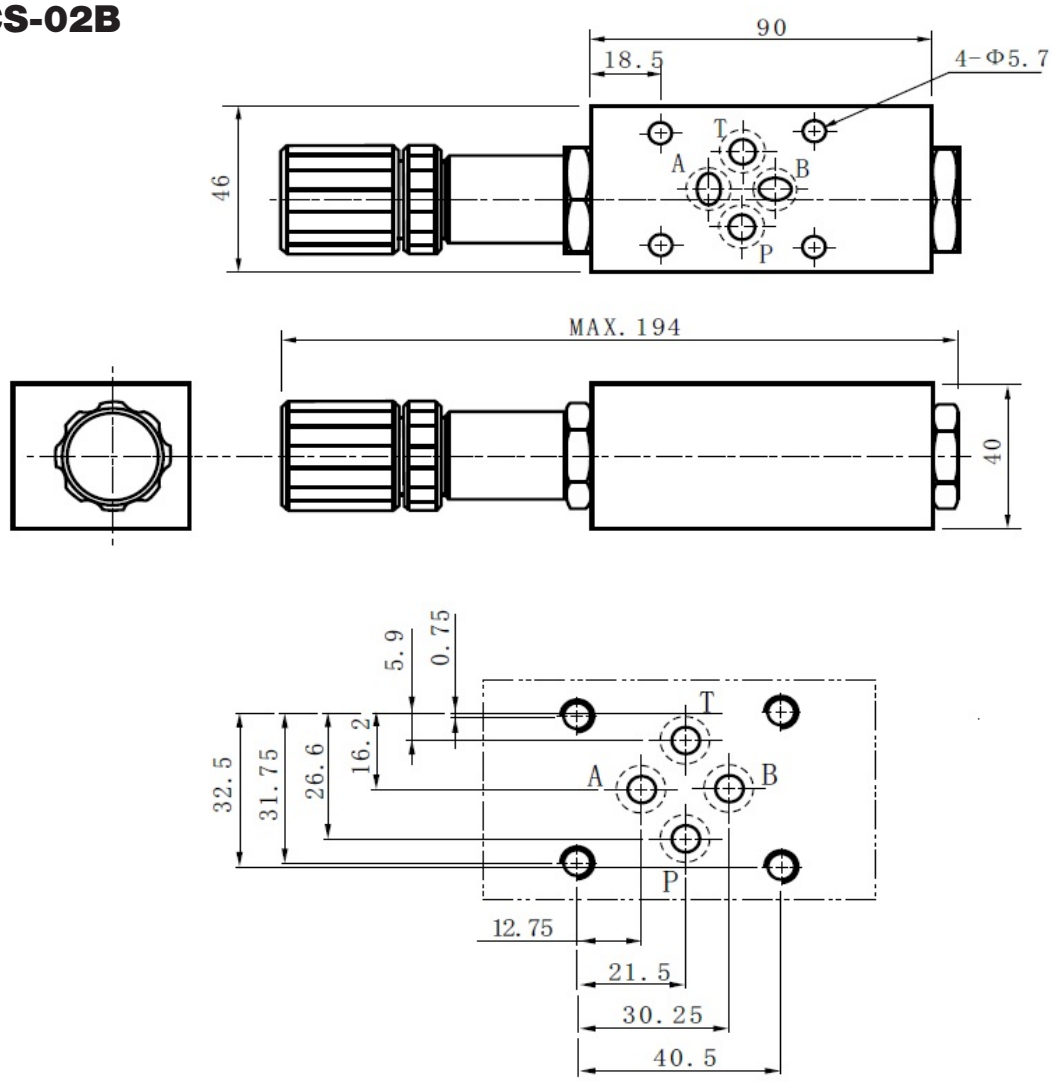

CETOP 3 NG6 MODULAR FLOW CONTROL VALVE PRICE LIST		
PRODUCT REFERENCE	**DESCRIPTION**	**RRP**
FFCS-02A-K-1-20	CETOP 3 MODULAR COUNTER BALANCE VAVE 8-70BAR ON A LINE	£127.20
FFCS-02A-K-2-20	CETOP 3 MODULAR COUNTER BALANCE VAVE 35-140BAR ON A LINE	£127.20
FFCS-02A-K-3-20	CETOP 3 MODULAR COUNTER BALANCE VAVE 70-250BAR ON A LINE	£127.20
FFCS-02B-K-1-20	CETOP 3 MODULAR COUNTER BALANCE VAVE 8-70BAR ON B LINE	£127.20
FFCS-02B-K-2-20	CETOP 3 MODULAR COUNTER BALANCE VAVE 35-140BAR ON B LINE	£127.20
FFCS-02B-K-3-20	CETOP 3 MODULAR COUNTER BALANCE VAVE 70-250BAR ON B LINE	£127.20

FLOWFIT CETOP 3 NG6 STEEL PARALLEL CIRCUIT MANIFOLD

BRAND NEW PRODUCT
PLEASE SEE OUR WEBSITE FOR PHOTOGRAPHS

FLOWFIT CETOP 3 NG6 STEEL PARALLEL CIRCUIT MANIFOLD

The Flowfit CETOP 3 parallel circuit manifold is precision machined from a mild steel block with sizes of 3/8"BSP for A & B ports and 1/2"BSP for P & T ports.

Flowfit manifolds are available from 1 to 10 stations with a 1/4"BSP Gauge port machined as standard on the 2 station and above (not available on the 1 station manifold).

SPECIFICATION

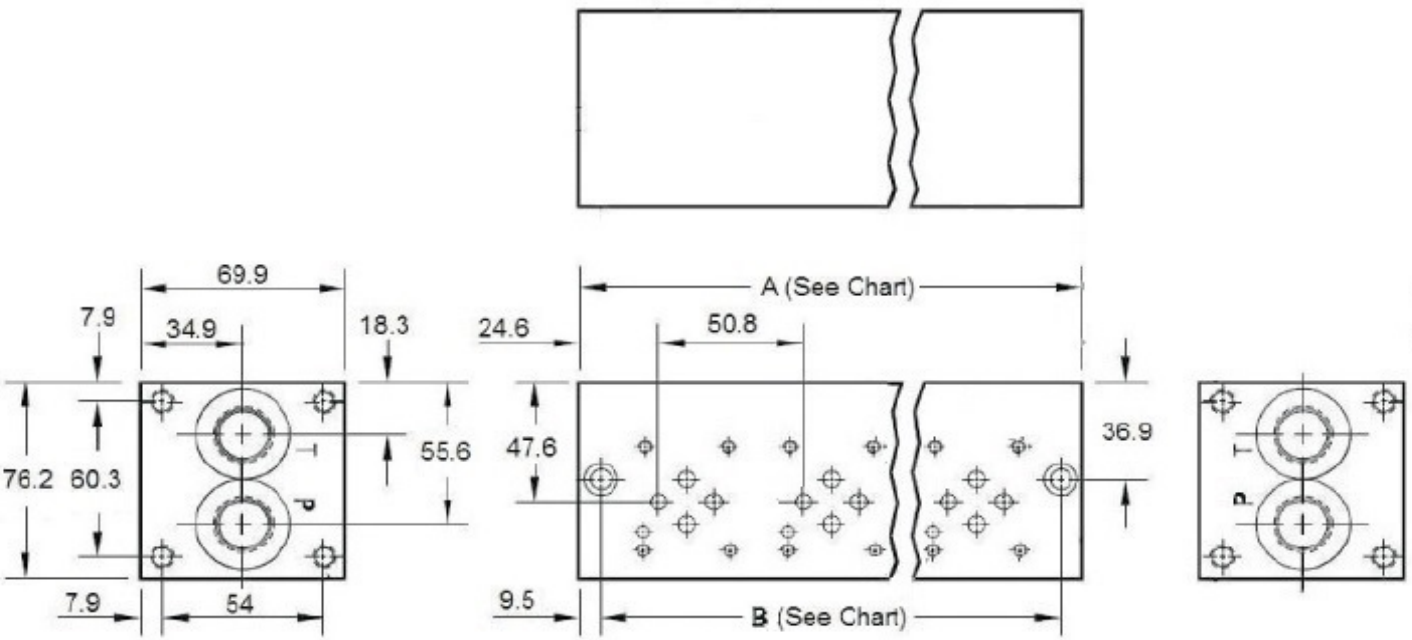

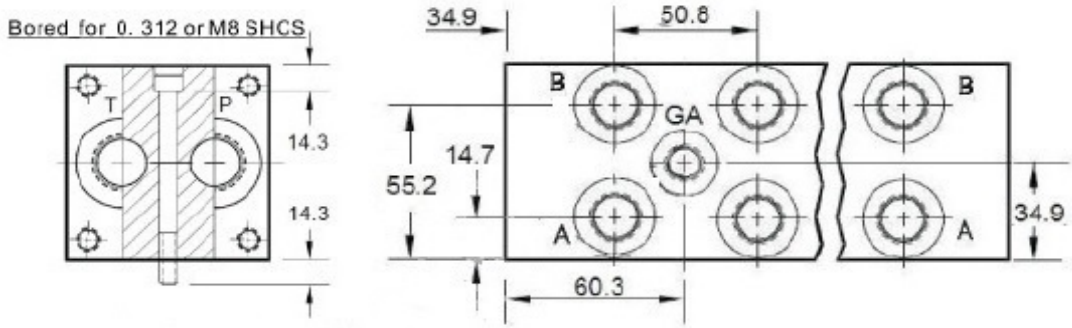

Parallel Circuit

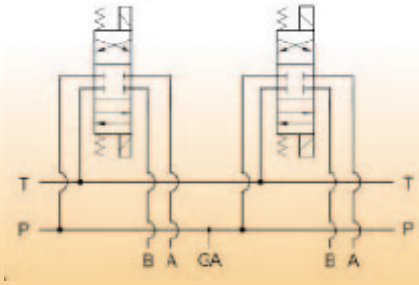

FLOWFIT CETOP 3 NG6 STEEL PARALLEL CIRCUIT MANIFOLD

WEIGHT/ DIMENSIONS	NUMBER OF STATIONS									
	1	2	3	4	5	6	7	8	9	10
WEIGHT (KGS)	2.57	4.45	6.33	8.21	10.09	11.97	13.85	15.73	17.61	19.49
LENGTH "A" (MM)	69.9	12.07	171.5	222.3	273.1	323.9	374.7	425.5	476.3	527.1
LENGTH "B" (MM)	50.8	101.6	152.4	203.2	254	304.8	355.6	406.4	457.2	508

NOTE: GAUGE PORT IS NOT AVAILABLE ON 1 STATION MANIFOLD

CETOP 3 NG6 STEEL MANIFOLD (WITHOUT RELIEF VALVE CAVITY) PRICE LIST

PRODUCT REFERENCE	DESCRIPTION	RRP
MD-03P-1-G	CETOP 3 1 STATION STEEL MANIFOLD NO RV CAVITY	£38.16
MD-03P-2-G	CETOP 3 2 STATION STEEL MANIFOLD NO RV CAVITY	£69.96
MD-03P-3-G	CETOP 3 3 STATION STEEL MANIFOLD NO RV CAVITY	£102.82
MD-03P-4-G	CETOP 3 4 STATION STEEL MANIFOLD NO RV CAVITY	£139.92
MD-03P-5-G	CETOP 3 5 STATION STEEL MANIFOLD NO RV CAVITY	£178.08
MD-03P-6-G	CETOP 3 6 STATION STEEL MANIFOLD NO RV CAVITY	£216.24
MD-03P-7-G	CETOP 3 7 STATION STEEL MANIFOLD NO RV CAVITY	£254.40
MD-03P-8-G	CETOP 3 8 STATION STEEL MANIFOLD NO RV CAVITY	£292.56
MD-03P-9-G	CETOP 3 9 STATION STEEL MANIFOLD NO RV CAVITY	£330.72
MD-03P-10-G	CETOP 3 10 STATION STEEL MANIFOLD NO RV CAVITY	£375.24

FLOWFIT CETOP 3 NG6 STEEL PARALLEL CIRCUIT MANIFOLD WITH RELIEF VALVE

BRAND NEW PRODUCT
PLEASE SEE OUR WEBSITE FOR PHOTOGRAPHS

FLOWFIT CETOP 3 NG6 STEEL PARALLEL CIRCUIT MANIFOLD WITH RELIEF VALVE CAVITY

The Flowfit CETOP 3 parallel circuit manifold is precision machined from a steel block with sizes of 3/8"BSP for A & B ports and 1/2"BSP for P & T ports. The manifold also comes with a machined port for a relief valve.

Flowfit manifolds are available from 1 to 10 stations with a 1/4"BSP Gauge port machined as standard on the 2 station and above (not available on the 1 station manifold).

SPECIFICATION

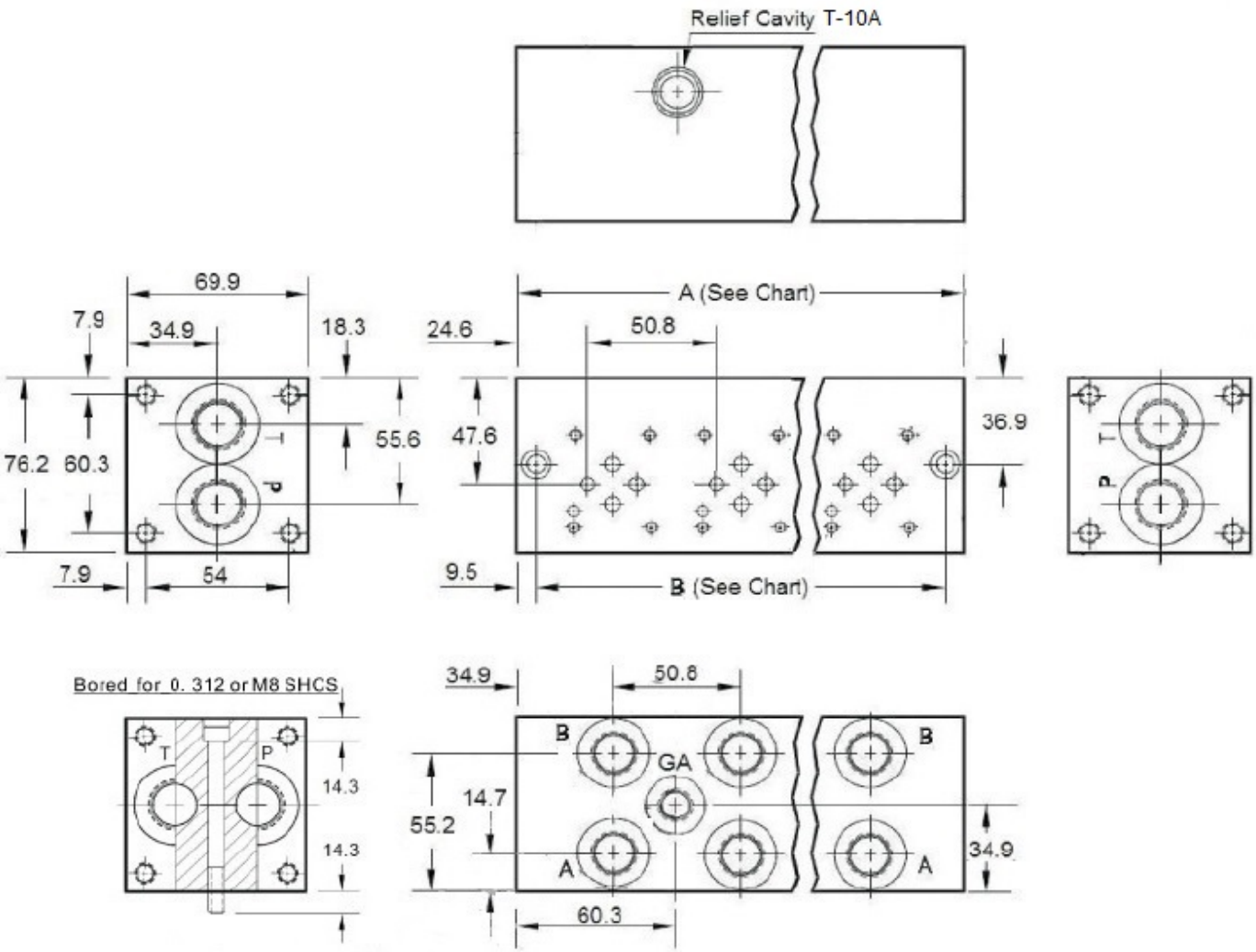

Parallel Circuit with Cavity

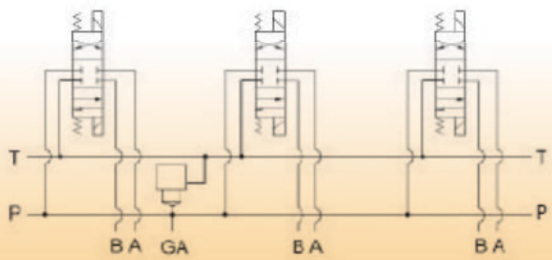

FLOWFIT CETOP 3 NG6 STEEL PARALLEL CIRCUIT MANIFOLD WITH RELIEF VALVE

WEIGHT/ DIMENSIONS	NUMBER OF STATIONS									
	1	2	3	4	5	6	7	8	9	10
WEIGHT (KGS)	3.51	4.45	6.33	8.21	10.09	11.97	13.85	15.73	17.61	19.49
LENGTH "A" (MM)	95.3	12.07	171.5	222.3	273.1	323.9	374.7	425.5	476.3	527.1
LENGTH "B" (MM)	76.2	101.6	152.4	203.2	254	304.8	355.6	406.4	457.2	508

NOTE: GAUGE PORT IS NOT AVAILABLE ON 1 STATION MANIFOLD

CETOP 3 NG6 STEEL MANIFOLD (WITH RELIEF VALVE CAVITY) PRICE LIST

PRODUCT REFERENCE	DESCRIPTION	RRP
MD-03P-1-G-S	CETOP 3 1 STATION STEEL MANIFOLD WITH RV CAVITY	£97.92
MD-03P-2-G-S	CETOP 3 2 STATION STEEL MANIFOLD WITH RV CAVITY	£123.49
MD-03P-3-G-S	CETOP 3 3 STATION STEEL MANIFOLD WITH RV CAVITY	£166.69
MD-03P-4-G-S	CETOP 3 4 STATION STEEL MANIFOLD WITH RV CAVITY	£210.88
MD-03P-5-G-S	CETOP 3 5 STATION STEEL MANIFOLD WITH RV CAVITY	£259.49
MD-03P-6-G-S	CETOP 3 6 STATION STEEL MANIFOLD WITH RV CAVITY	£299.12
MD-03P-7-G-S	CETOP 3 7 STATION STEEL MANIFOLD WITH RV CAVITY	£349.47
MD-03P-8-G-S	CETOP 3 8 STATION STEEL MANIFOLD WITH RV CAVITY	£402.74
MD-03P-9-G-S	CETOP 3 9 STATION STEEL MANIFOLD WITH RV CAVITY	£443.40
MD-03P-10-G-S	CETOP 3 10 STATION STEEL MANIFOLD WITH RV CAVITY	£493.22
SNH-RDDALAN	CETOP 3 RELIEF CARTRIDGE	£65.46

FLOWFIT CETOP 3 NG6 STEEL SUBPLATE WITH SIDE PORTS

FLOWFIT CETOP 3 NG6 STEEL SUBPLATE WITH SIDE PORTS

The Flowfit CETOP 3 subplate is machined from steel and is available with 3/8"BSP, 1/2"BSP or 3/4"BSP side ports.

SPECIFICATION

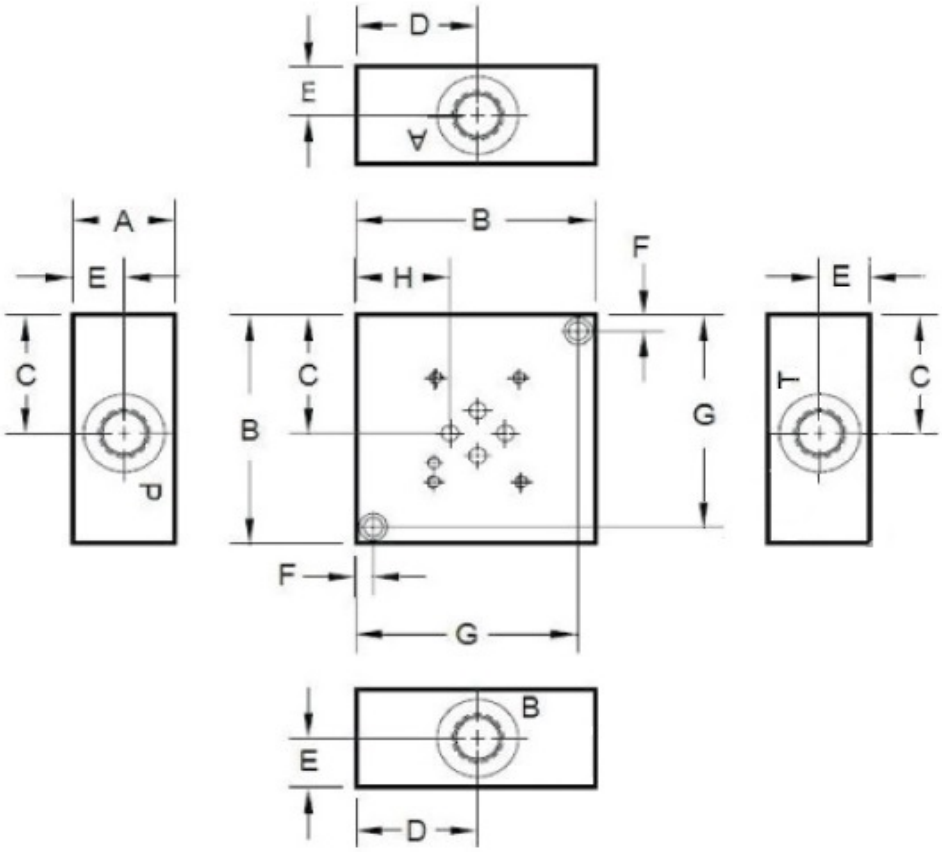

PRODUCT REFERENCE	PORT SIZE	DIMENSIONS							
		A	B	C	D	E	F	G	H
D-03-SP-S-6G	3/8"BSP	25.4	63.5	33.3	31.8	12.7	6.4	57.2	22.4
D-03-SP-S-8G	1/2"BSP	38.1	88.9	46	45.2	19.1	6.4	82.6	34.9
D-03-SP-S-12G	3/4"BSP	44.5	102	52.4	51.6	22.2	9.5	92.1	41.3

CETOP 3 NG6 STEEL SUBPLATE WITH SIDE PORTS PRICE LIST		
PRODUCT REFERENCE	DESCRIPTION	RRP
D-03-SP-S-6G	CETOP 3 SUBPLATE SIDE ENTRY 3/8" BSPP PORTED	£28.62
D-03-SP-S-8G	CETOP 3 SUBPLATE SIDE ENTRY 1/2" BSPP PORTED	£31.42
D-03-SP-S-12G	CETOP 3 SUBPLATE SIDE ENTRY 3/4" BSPP PORTED	£48.97

FLOWFIT CETOP 3 NG6 STEEL SUBPLATE WITH BASE PORTS

FLOWFIT CETOP 3 NG6 STEEL SUBPLATE WITH BASE PORTS

The Flowfit CETOP 3 subplate is machined from steel and is available with 3/8"BSP, 1/2"BSP or 3/4"BSP base ports.

SPECIFICATION

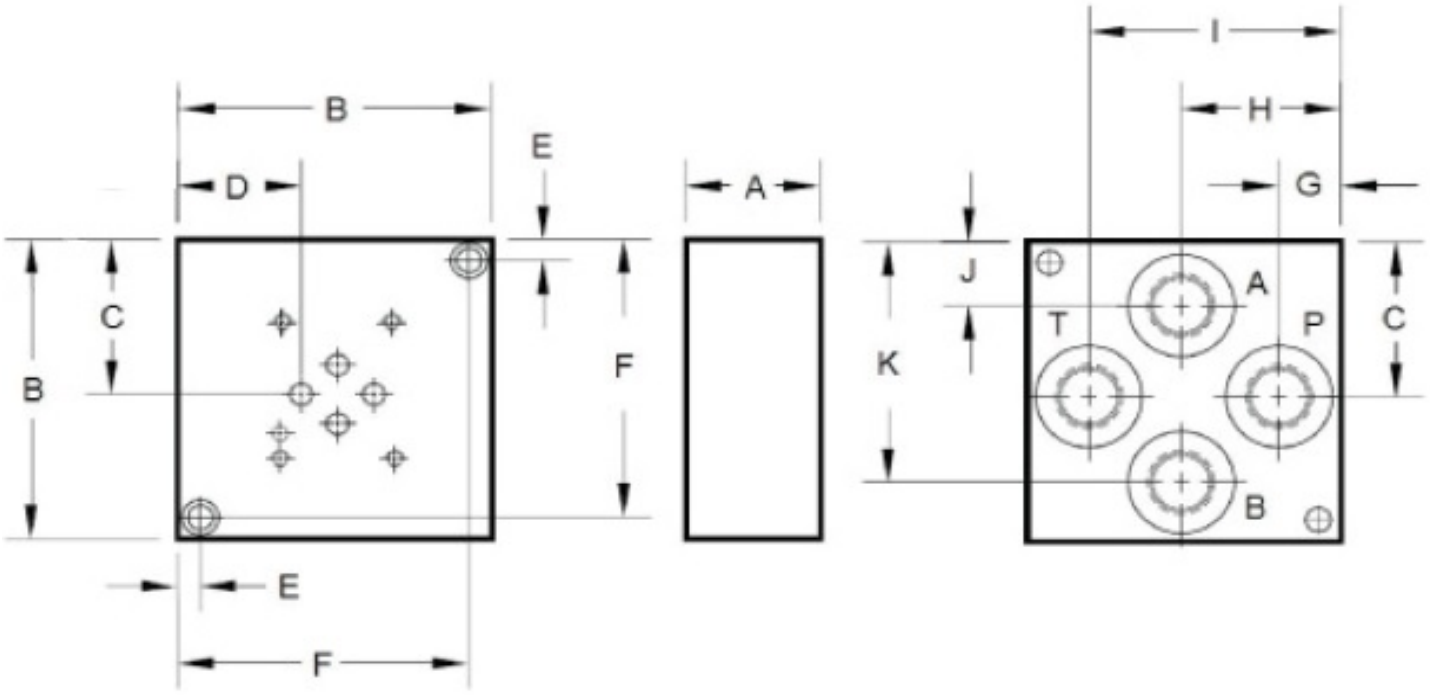

PRODUCT REFERENCE	PORT SIZE	DIMENSIONS										
		A	B	C	D	E	F	G	H	I	J	K
D-03-SP-B-6G	3/8"BSP	25.4	63.5	31.8	21.4	6.4	57.2	13	31.8	50.4	13.2	50
D-03-SP-B-8G	1/2"BSP	38.1	88.9	46	34.9	6.4	82.6	17.5	45.2	71.4	19.1	71.4
D-03-SP-B-12G	3/4"BSP	38.1	114	58.8	47.6	9.5	105	23.8	57.9	90.5	23.8	90.5

CETOP 3 NG6 STEEL SUBPLATE WITH BASE PORTS PRICE LIST

PRODUCT REFERENCE	DESCRIPTION	RRP
D-03-SP-B-6G	CETOP 3 SUBPLATE BASE ENTRY 3/8" BSPP PORTED	£28.62
D-03-SP-B-8G	CETOP 3 SUBPLATE BASE ENTRY 1/2" BSPP PORTED	£31.42
D-03-SP-B-12G	CETOP 3 SUBPLATE BASE ENTRY 3/4" BSPP PORTED	£48.97

FLOWFIT CETOP 3 NG6 STEEL COVER PLATE

BRAND NEW PRODUCT
PLEASE SEE OUR WEBSITE FOR PHOTOGRAPHS

FLOWFIT CETOP 3 NG6 STEEL COVER PLATE

The Flowfit steel cover plate replaces a CETOP 3 solenoid valve on the steel manifold, providing a pressure blank to enable the remaining stations to operate.

SPECIFICATION

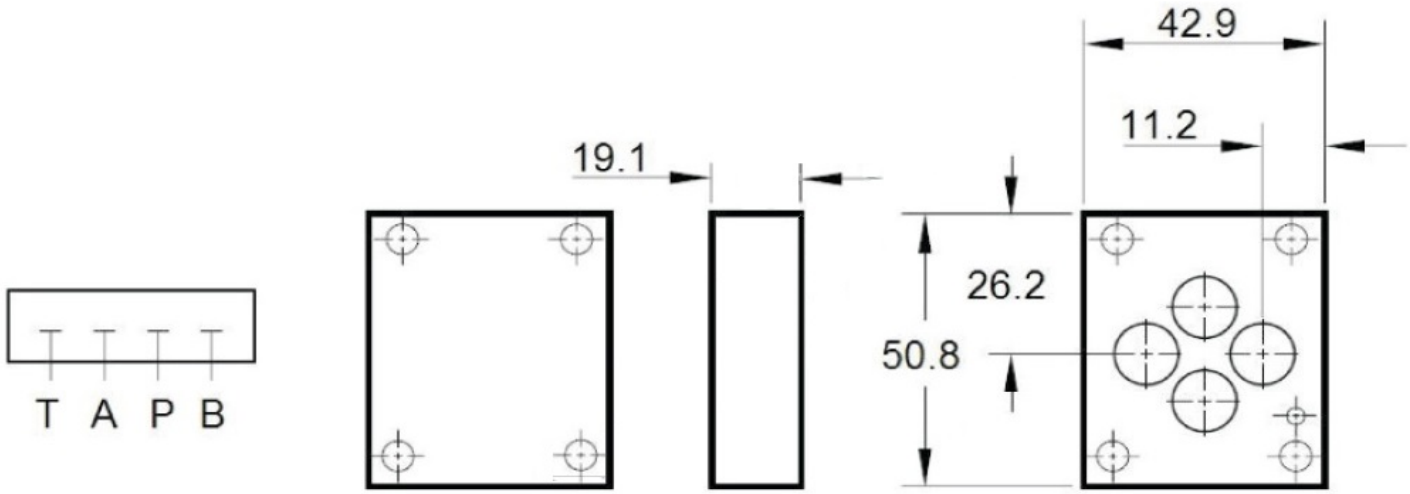

CETOP 3 NG6 STEEL COVER PLATE PRICE LIST		
PRODUCT REFERENCE	DESCRIPTION	RRP
D-03-CP-G	CETOP 3 COVER PLATE	£8.97

FLOWFIT CETOP 5 VALVES

FLOWFIT CETOP 5 NG10 SOLENOID DIRECTIONAL CONTROL VALVES NP56
FLOWFIT CETOP 5 NG10 MODULAR RELIEF VALVE NP60
FLOWFIT CETOP 5 NG10 MODULAR REDUCING VALVE NP62
FLOWFIT CETOP 5 NG10 MODULAR CHECK VALVE NP64
FLOWFIT CETOP 5 NG10 MODULAR PILOT OPERATED CHECK VALVE NP66
FLOWFIT CETOP 5 NG10 MODULAR FLOW CONTROL VALVE NP68
FLOWFIT CETOP 5 NG10 STEEL PARALLEL CIRCUIT MANIFOLD NP70
FLOWFIT CETOP 5 NG10 STEEL PARALLEL CIRCUIT MANIFOLD WITH RELIEF VALVE NP72
FLOWFIT CETOP 5 NG10 STEEL SUBPLATE WITH SIDE PORTS NP74
FLOWFIT CETOP 5 NG10 STEEL SUBPLATE WITH BASE PORTS NP75
FLOWFIT CETOP 5 NG10 STEEL COVER PLATE NP76

FLOWFIT®

FLOWFIT CETOP 5 NG10 SOLENOID DIRECTIONAL CONTROL VALVES

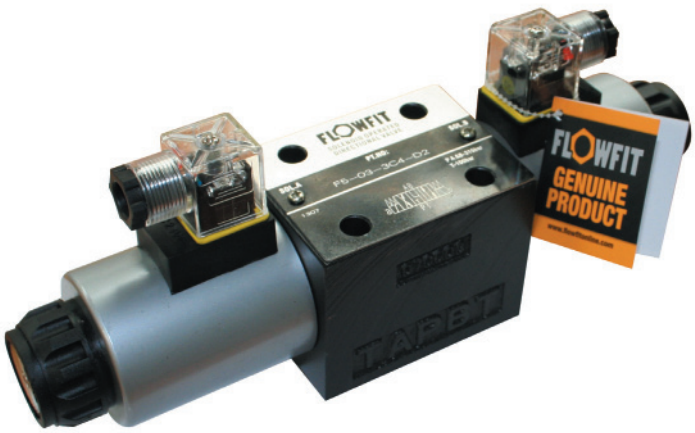

FLOWFIT CETOP 5 NG10 SOLENOID DIRECTIONAL CONTROL VALVE

Flowfit offer a large range of solenoid operated CETOP 5 NG10 with a maximum flow of 120 l/min, commonly used in powerpacks and other hydraulic applications. Available in 12VDC, 24VDC, 110VAC and 220VAC.

Flowfit F5-03 series CETOP 5 NG10 solenoid valves are Electro-Hydraulic spool type valves. They are solenoid operated and control the start, stop and direction of the oil flow in the hydraulic circuit.

They are used for hydraulic powerpacks as well as for stand alone hydraulic manifold blocks.

SPECIFICATION

Nominal Size: NG10
Maximum Flow Rate: 120 l/min
Maximum Pressure: A,B,P = 315 Bar
Seal Material:- NBR
Max Fluid Temperature: -20° to 70°C
Oil Viscosity: -2.8 to 380 mm2/s
Switch Cycles **Open:** 50 ~ 60ms
Closed: 50 ~ 70ms
Switch Frequency: 15000 times per hour
Insulation Grade: IP65
Weight: Single Solenoid: 4.8kg,
Double Solenoid: 6.1kg
Voltages: 12VDC=D1, 24VDC=D2, 110V/AC 50HZ=A1,
220V/AC 50HZ=A2
Manual Override: Standard on all valves
Connector Type: DIN Plug (with LED)

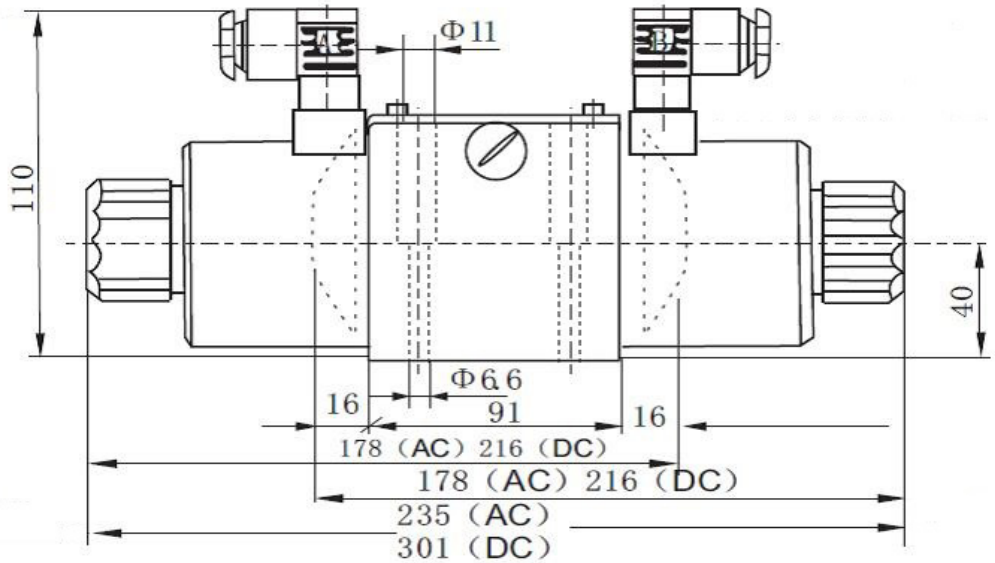

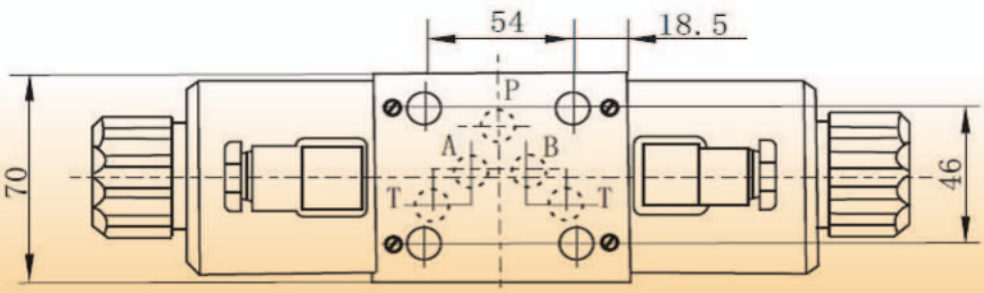

FLOWFIT CETOP 5 NG10 SOLENOID DIRECTIONAL CONTROL VALVES

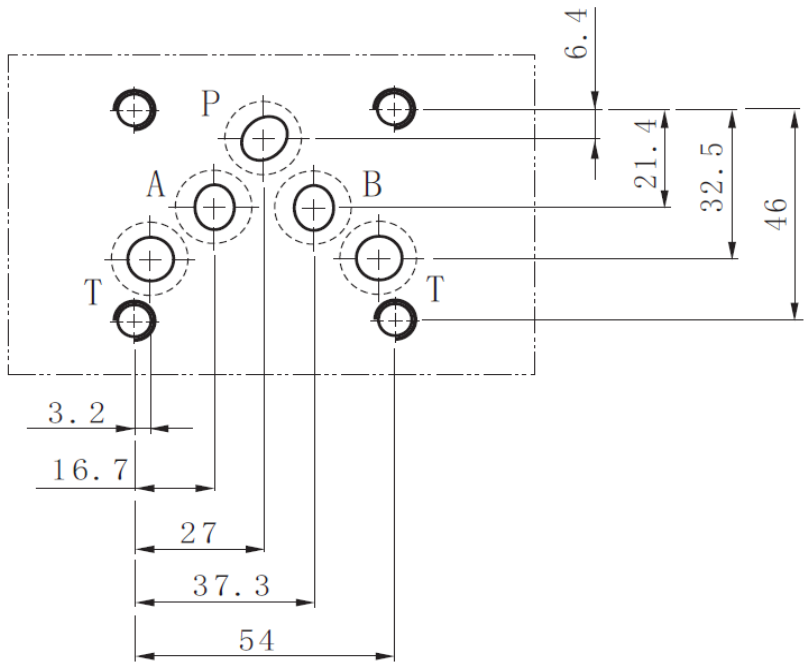

CHARACTERISTIC CURVES

(measured at v=41mm²/s and t=50℃)

CETOP 5 (Nominal Size: NG10)

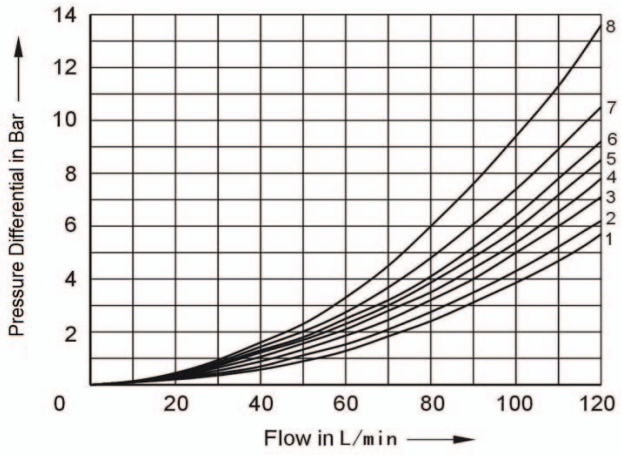

Spool Type	Flow Direction				
	P - A	P - B	A - T	B - T	P - T
2B2	5	5	6	6	_
2B3	1	3	4	5	_
3C2	1	1	4	4	_
3C4	1	1	3	3	_
3C5	2	3	7	4	8
3C9	1	1	4	5	_
3C10	2	2	3	3	_
3C12	2	2	3	5	_
3C25	3	1	1	1	_
3C40	1	1	2	2	_
3C60	3	3	6	7	8

Spool Type	Flow Direction				
	P - A	P - B	A - T	B - T	P - T
2B2A	5	_	_	6	_
2B2AL	_	5	6	_	_
2B2B	_	5	6	_	_
2B2BL	5	_	_	6	_
2B3A	1	_	_	5	_
2B3AL	_	3	4	_	_
2B3B	_	3	4	_	_
2B3BL	1	_	_	5	_
2B4B	_	1	3	3	_
2B4BL	1	_	3	3	_
2B5B	2	_	_	4	8
2B5BL	_	3	7	_	8

Spool Type	Flow Direction				
	P - A	P - B	A - T	B - T	P - T
2B9B	_	1	4	_	_
2B9BL	1	_	_	5	_
2B10B	_	2	3	_	_
2B10BL	2	_	_	3	_
2B12B	_	2	3	_	_
2B12BL	2	_	_	5	_
2B25B	3	1	_	1	_
2B25BL	_	1	1	1	_
2B40B	_	1	2	_	_
2B40BL	1	_	_	2	_
2B60B	3	_	_	7	8
2B60BL	_	3	6	_	8

FLOWFIT CETOP 5 NG10 SOLENOID DIRECTIONAL CONTROL VALVES

CETOP 5 NG10 PRICE LIST

FLOWFIT CETOP 5 NG10 SPRING CENTERED 3 POSITION DOUBLE ACTING SOLENOID DIRECTIONAL CONTROL VALVE

PRODUCT REFERENCE	SINGLE/DOUBLE SOLENOID	CONFIGURATION	SPOOL RETURN	RRP
F5-03-3C2-**	DOUBLE	3 POSITION	SPRING	£152.64
F5-03-3C3-**	DOUBLE	3 POSITION	SPRING	£152.64
F5-03-3C4-**	DOUBLE	3 POSITION	SPRING	£152.64
F5-03-3C5-**	DOUBLE	3 POSITION	SPRING	£152.64
F5-03-3C9-**	DOUBLE	3 POSITION	SPRING	£152.64
F5-03-3C10-**	DOUBLE	3 POSITION	SPRING	£152.64
F5-03-3C11-**	DOUBLE	3 POSITION	SPRING	£152.64
F5-03-3C12-**	DOUBLE	3 POSITION	SPRING	£152.64
F5-03-3C25-**	DOUBLE	3 POSITION	SPRING	£152.64
F5-03-3C40-**	DOUBLE	3 POSITION	SPRING	£152.64
F5-03-3C60-**	DOUBLE	3 POSITION	SPRING	£152.64

NOTE: SUBSTITUTE THE ** WITH VOLTAGE PREFERENCE.
12VDC=D1, 24VDC=D2, 110V/AC 50HZ=A1, 220V/AC 50HZ=A2

SPRING OFFSET 2 POSITION SOLENOID DIRECTIONAL CONTROL VALVE

PRODUCT REFERENCE	SINGLE/DOUBLE SOLENOID	CONFIGURATION	SPOOL RETURN	RRP
F5-03-2B2-**	SINGLE	2 POSITION	SPRING	£99.64
F5-03-2B2L-**	SINGLE	2 POSITION	SPRING	£99.64
F5-03-2B2A-**	SINGLE	2 POSITION	SPRING	£99.64
F5-03-2B2AL-**	SINGLE	2 POSITION	SPRING	£99.64
F5-03-2B2B-**	SINGLE	2 POSITION	SPRING	£99.64
F5-03-2B2BL-**	SINGLE	2 POSITION	SPRING	£99.64
F5-03-2B3-**	SINGLE	2 POSITION	SPRING	£99.64
F5-03-2B3L-**	SINGLE	2 POSITION	SPRING	£99.64
F5-03-2B3A-**	SINGLE	2 POSITION	SPRING	£99.64
F5-03-2B3AL-**	SINGLE	2 POSITION	SPRING	£99.64
F5-03-2B3B-**	SINGLE	2 POSITION	SPRING	£99.64
F5-03-2B3BL-**	SINGLE	2 POSITION	SPRING	£99.64
F5-03-2B4B-**	SINGLE	2 POSITION	SPRING	£99.64
F5-03-2B4BL-**	SINGLE	2 POSITION	SPRING	£99.64
F5-03-2B5B-**	SINGLE	2 POSITION	SPRING	£99.64
F5-03-2B5BL-**	SINGLE	2 POSITION	SPRING	£99.64
F5-03-2B8-**	SINGLE	2 POSITION	SPRING	£99.64
F5-03-2B8L-**	SINGLE	2 POSITION	SPRING	£99.64
F5-03-2B9B-**	SINGLE	2 POSITION	SPRING	£99.64
F5-03-2B9BL-**	SINGLE	2 POSITION	SPRING	£99.64
F5-03-2B10B-**	SINGLE	2 POSITION	SPRING	£99.64
F5-03-2B10BL-**	SINGLE	2 POSITION	SPRING	£99.64
F5-03-2B11B-**	SINGLE	2 POSITION	SPRING	£99.64
F5-03-2B11BL-**	SINGLE	2 POSITION	SPRING	£99.64
F5-03-2B12A-**	SINGLE	2 POSITION	SPRING	£99.64
F5-03-2B12AL-**	SINGLE	2 POSITION	SPRING	£99.64
F5-03-2B12B-**	SINGLE	2 POSITION	SPRING	£99.64

FLOWFIT CETOP 5 NG10 SOLENOID DIRECTIONAL CONTROL VALVES

FLOWFIT®

SPRING CENTERED 3 POSITION SOLENOID DIRECTIONAL CONTROL VALVE				
PRODUCT REFERENCE	**SINGLE/DOUBLE SOLENOID**	**CONFIGURATION**	**SPOOL RETURN**	**RRP**
F5-03-2B12BL-**	SINGLE	2 POSITION	SPRING	£99.64
F5-03-2B25B-**	SINGLE	2 POSITION	SPRING	£99.64
F5-03-2B25BL-**	SINGLE	2 POSITION	SPRING	£99.64
F5-03-2B40B-**	SINGLE	2 POSITION	SPRING	£99.64
F5-03-2B40BL-**	SINGLE	2 POSITION	SPRING	£99.64
F5-03-2B60B-**	SINGLE	2 POSITION	SPRING	£99.64
F5-03-2B60BL-**	SINGLE	2 POSITION	SPRING	£99.64

NOTE: SUBSTITUTE THE ** WITH VOLTAGE PREFERENCE.
12VDC=D1, 24VDC=D2, 110V/AC 50HZ=A1, 220V/AC 50HZ=A2

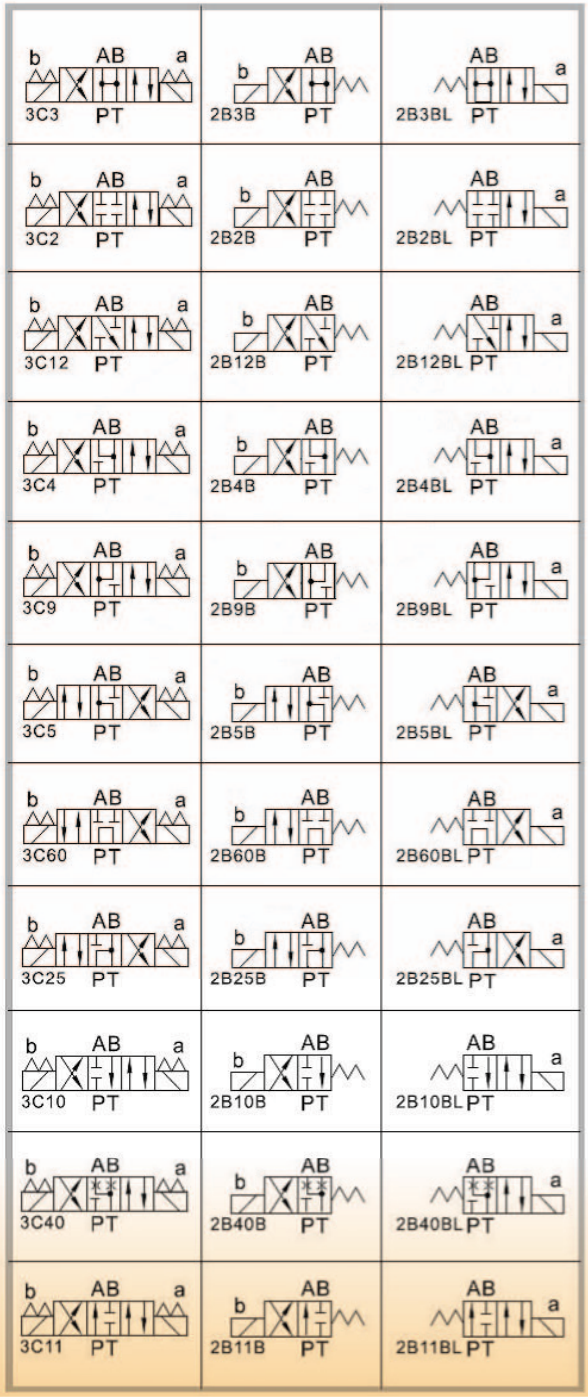

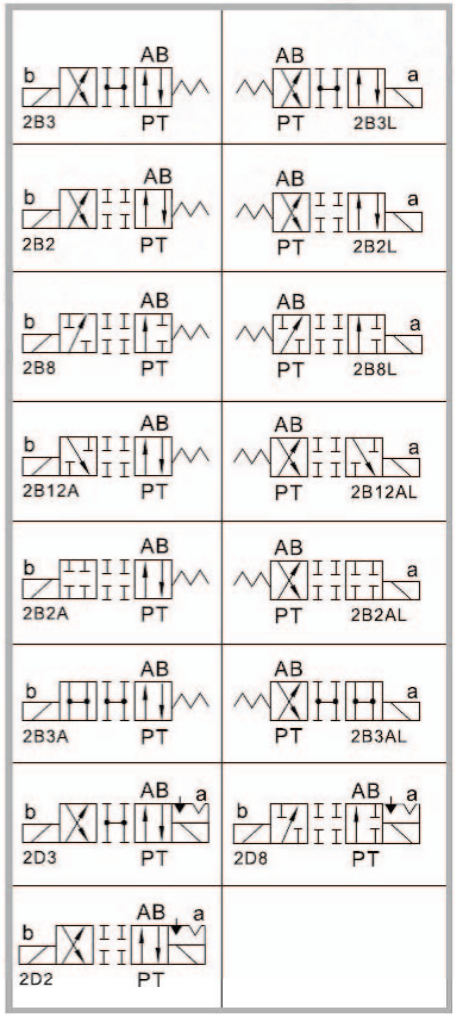

FLOWFIT CETOP 5 NG10 MODULAR RELIEF VALVE

FLOWFIT CETOP 5 NG10 MODULAR RELIEF VALVE

The Flowfit CETOP 5 NG10 Modular Relief Valve is available in a variety of configurations to control pressure in either the P, A or B ports.

There are three pressure ranges to choose from, providing the versatility to control system pressure in any application.

Pressure can be adjusted using the plastic knob (standard on all modular relief valves) but for added security, valves can also be supplied with an adjustment screw that can be locked once pressure has been set (Available upon request).

The pressure ranges available are:
8 - 70bar
35 - 140bar
70 - 250bar

SPECIFICATION

Nominal Size: NG10
Maximum Flow Rate: 70 l/min
Maximum Pressure: 250 Bar
Seal Material:- NBR
Max Fluid Temperature: -20° to 70°C
Oil Viscosity: -2.8 to 380 mm2/s
Weight P, A, B: 3.3kg
C: 3.7kg
Manual Adjustment: Standard on all valves

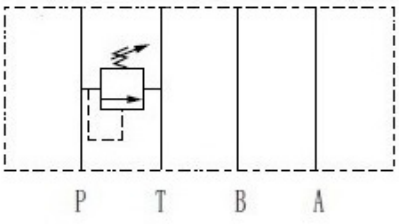

FFRV-P

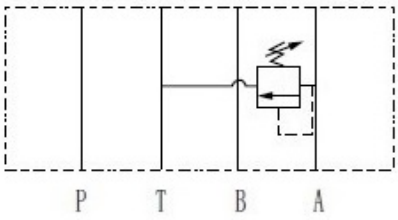

FFRV-A

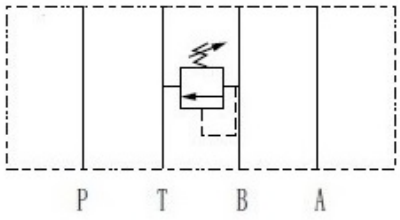

FFRV-B

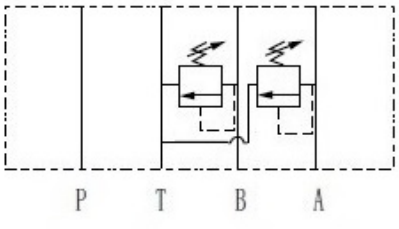

FFRV-C

DIMENSIONS

UNIT.mm

FFRV-03A

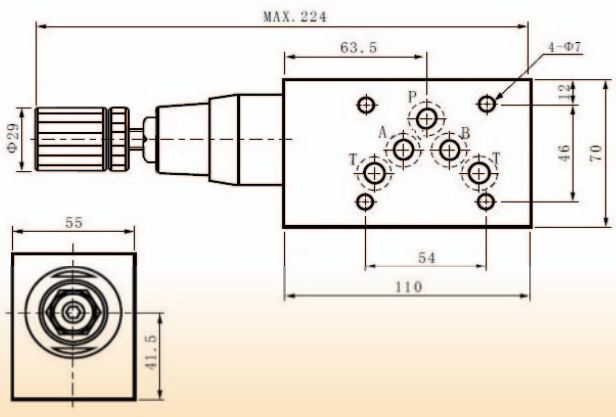

FFRV-03C

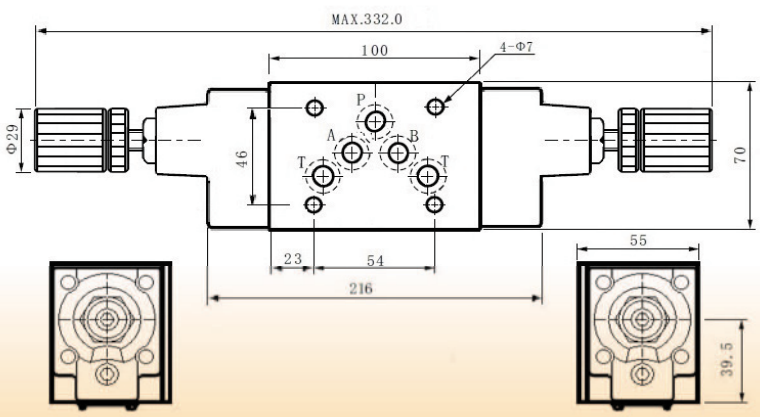

FLOWFIT CETOP 5 NG10 MODULAR RELIEF VALVE

FFRV-03B/P

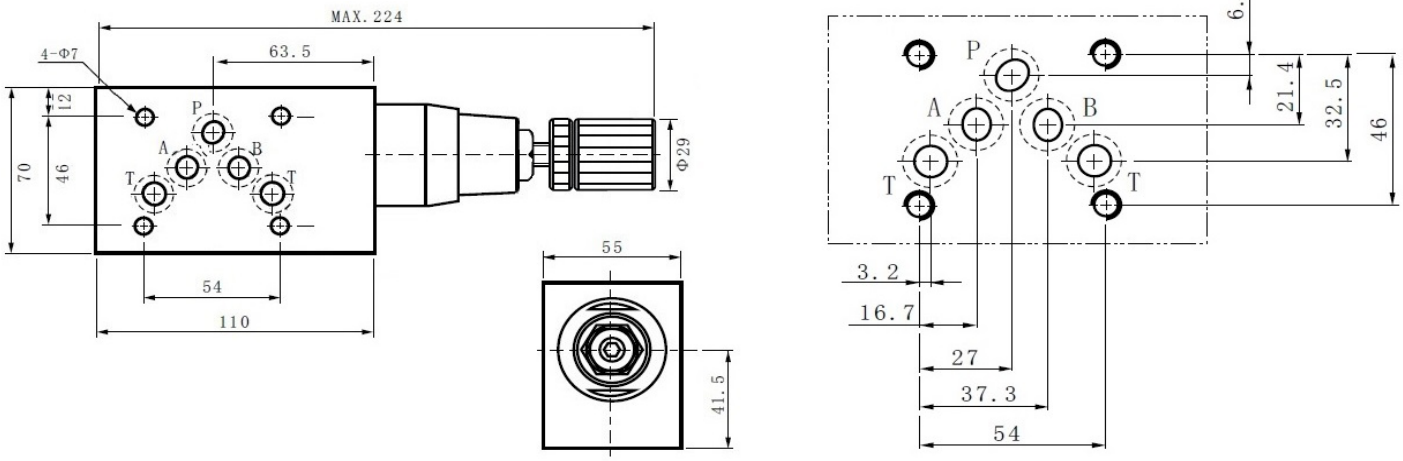

CETOP 5 NG10 MODULAR RELIEF VALVE PRICE LIST		
PRODUCT REFERENCE	**SINGLE/DOUBLE SOLENOID**	**RRP**
FFRV-03P-K-1-20	CETOP 5 MODULAR RELIEF VALVE 8-70BAR ON P	£98.58
FFRV-03P-K-2-20	CETOP 5 MODULAR RELIEF VALVE 35-140BAR ON P	£98.58
FFRV-03P-K-3-20	CETOP 5 MODULAR RELIEF VALVE 70-250BAR ON P	£98.58
FFRV-03A-K-1-20	CETOP 5 MODULAR RELIEF VALVE 8-70BAR ON A	£98.58
FFRV-03A-K-2-20	CETOP 5 MODULAR RELIEF VALVE 35-140BAR ON A	£98.58
FFRV-03A-K-3-20	CETOP 5 MODULAR RELIEF VALVE 70-250BAR ON A	£98.58
FFRV-03B-K-1-20	CETOP 5 MODULAR RELIEF VALVE 8-70BAR ON B	£98.58
FFRV-03B-K-2-20	CETOP 5 MODULAR RELIEF VALVE 35-140BAR ON B	£98.58
FFRV-03B-K-3-20	CETOP 5 MODULAR RELIEF VALVE 70-250BAR ON B	£98.58
FFRV-03C-K-1-20	CETOP 5 MODULAR RELIEF VALVE 8-70BAR ON A+B	£127.20
FFRV-03C-K-2-20	CETOP 5 MODULAR RELIEF VALVE 35-140BAR ON A+B	£127.20
FFRV-03C-K-3-20	CETOP 5 MODULAR RELIEF VALVE 70-250BAR ON A+B	£127.20

FLOWFIT CETOP 5 NG10 MODULAR REDUCING VALVE

BRAND NEW PRODUCT
PLEASE SEE OUR WEBSITE FOR PHOTOGRAPHS

FLOWFIT CETOP 5 NG10 MODULAR REDUCING VALVE

The Flowfit modular reducing valve is designed to lower the pressure in a specific circuit compared to the main system pressure.

There are three pressure ranges to choose from, providing the versatility to control individual circuit pressure.

Pressure can be adjusted using the plastic knob (standard on all modular reducing valves) but for added security, valves can also be supplied with an adjustment screw that can be locked once pressure has been set (Available upon request).

The pressure ranges available are:
8 - 70bar
35 - 140bar
70 - 250bar

SPECIFICATION

Nominal Size: NG10
Maximum Flow Rate: 70 l/min
Maximum Pressure: 250 Bar
Seal Material:- NBR
Max Fluid Temperature: -20° to 70°C
Oil Viscosity: -2.8 to 380 mm2/s
Weight: 3.3kg
Manual Adjustment: Standard on all valves

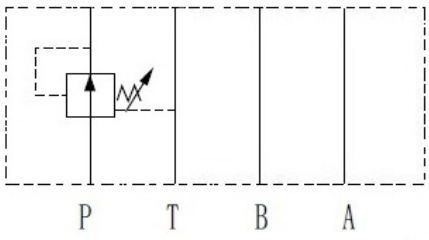

FFBRV-P

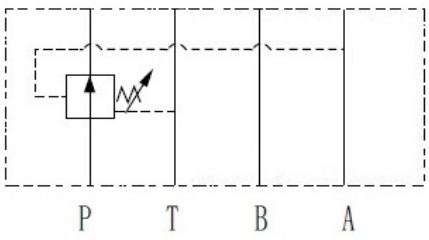

FFBRV-A

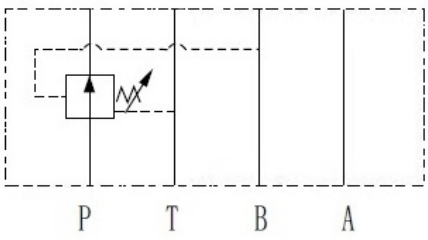

FFBRV-B

DIMENSIONS

UNIT.mm

FFBRV-03A/B/P

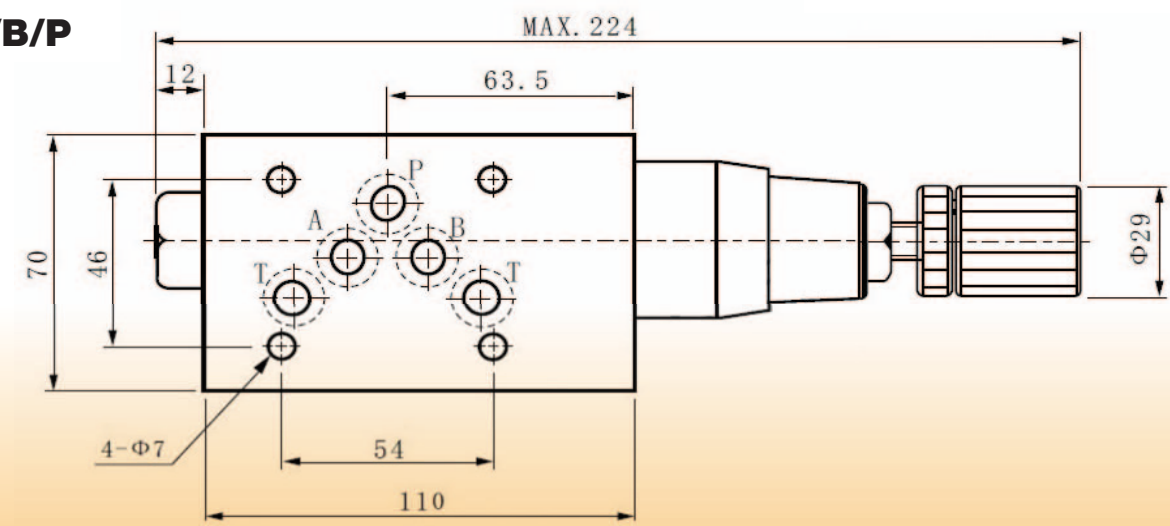

FLOWFIT CETOP 5 NG10 MODULAR REDUCING VALVE

FFBRV-03A/B/P

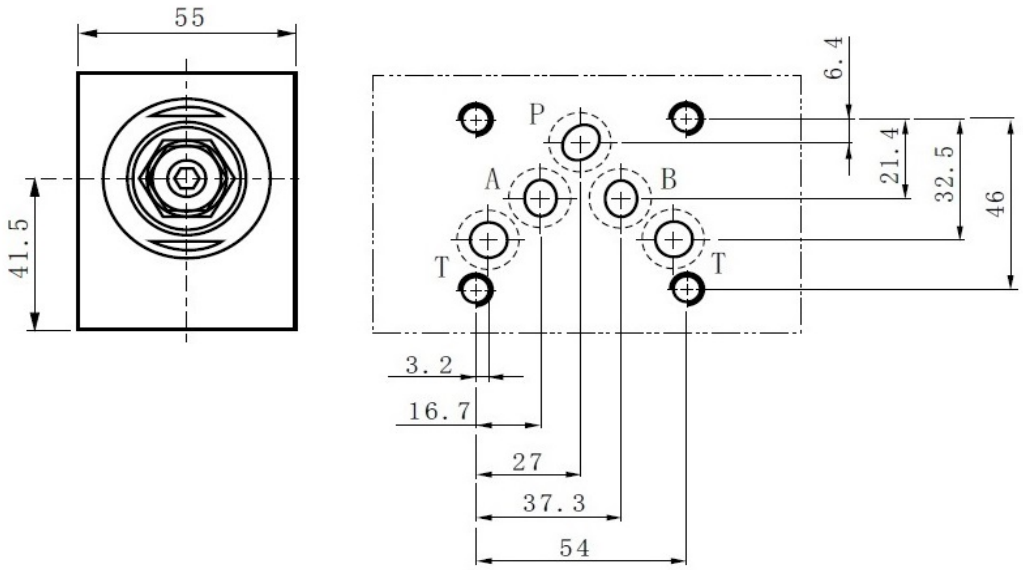

CETOP 5 NG10 MODULAR REDUCING VALVE PRICE LIST		
PRODUCT REFERENCE	**DESCRIPTION**	**RRP**
FFBRV-03P-K-1-20	CETOP 5 MODULAR REDUCING VALVE 8-70BAR ON P	£98.58
FFBRV-03P-K-2-20	CETOP 5 MODULAR REDUCING VALVE 35-140BAR ON P	£98.58
FFBRV-03P-K-3-20	CETOP 5 MODULAR REDUCING VALVE 70-250BAR ON P	£98.58
FFBRV-03A-K-1-20	CETOP 5 MODULAR REDUCING VALVE 8-70BAR ON A	£98.58
FFBRV-03A-K-2-20	CETOP 5 MODULAR REDUCING VALVE 35-140BAR ON A	£98.58
FFBRV-03A-K-3-20	CETOP 5 MODULAR REDUCING VALVE 70-250BAR ON A	£98.58
FFBRV-03B-K-1-20	CETOP 5 MODULAR REDUCING VALVE 8-70BAR ON B	£98.58
FFBRV-03B-K-2-20	CETOP 5 MODULAR REDUCING VALVE 35-140BAR ON B	£98.58
FFBRV-03B-K-3-20	CETOP 5 MODULR REDUCING VALVE 70-250BAR ON B	£98.58

FLOWFIT CETOP 5 NG10 MODULAR CHECK VALVE

BRAND NEW PRODUCT
PLEASE SEE OUR WEBSITE FOR PHOTOGRAPHS

FLOWFIT CETOP 3 NG6 MODULAR CHECK VALVE

The Flowfit modular check valve allows free flow in one direction and blocks the flow in the oposite direction.

Flowfit check valves are available for the A, B, P or T port and can be specified with a cracking pressure of 0.35bar or 3.5bar depending on the system requirements.

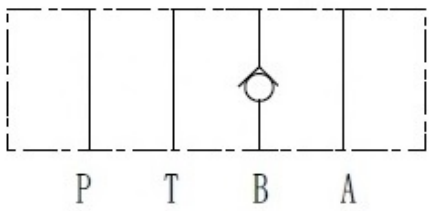

FFC-02B

SPECIFICATION

Nominal Size: NG10
Maximum Flow Rate: 70 l/min
Maximum Pressure: 250 Bar
Seal Material:- NBR
Max Fluid Temperature: -20° to 70°C
Oil Viscosity: -2.8 to 380 mm2/s
Weight: 2.5kg

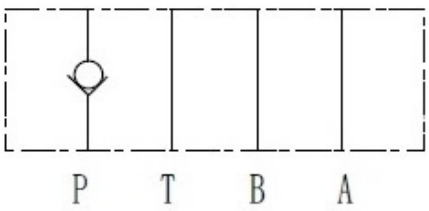

FFC-02P

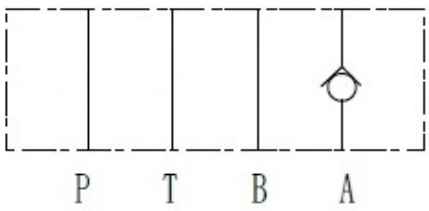

FFC-02A

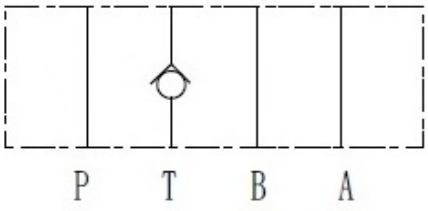

FFC-02T

FFC-02A/B

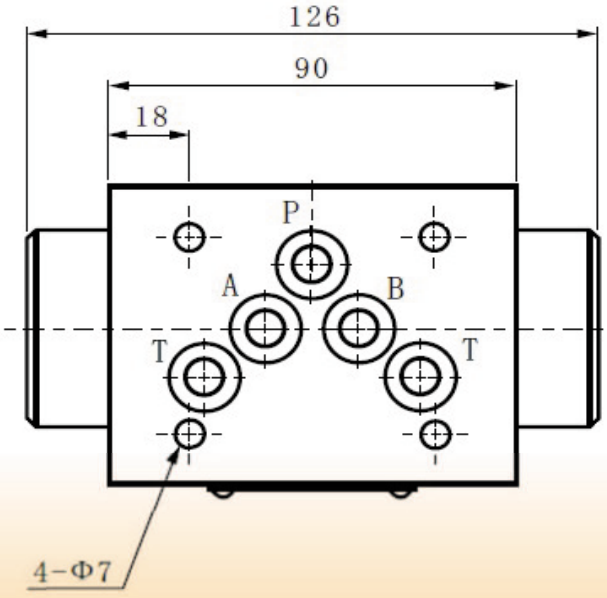

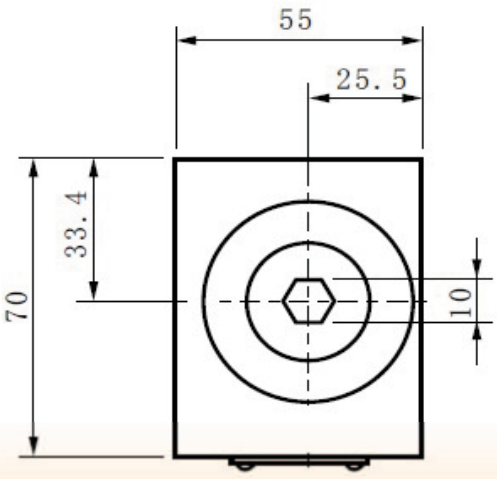

FLOWFIT CETOP 5 NG10 MODULAR CHECK VALVE

FFC-03P/T

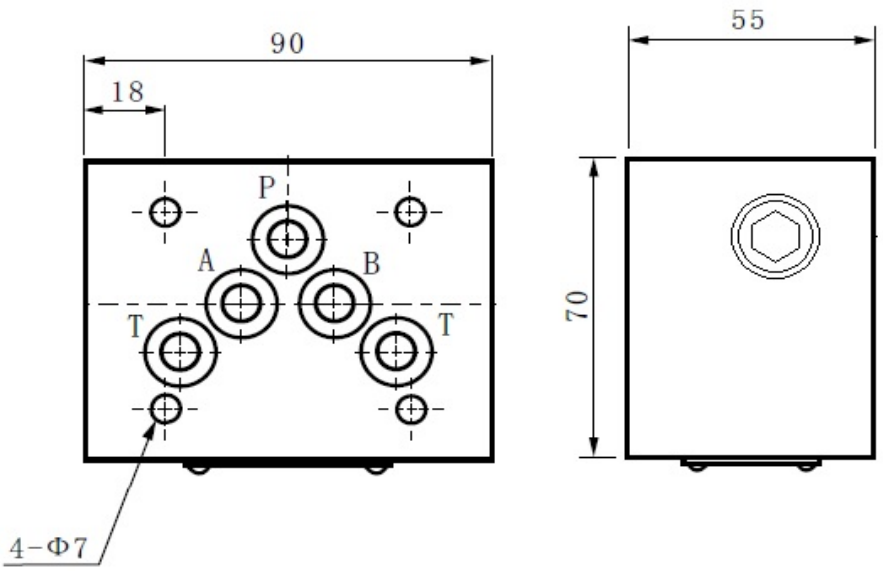

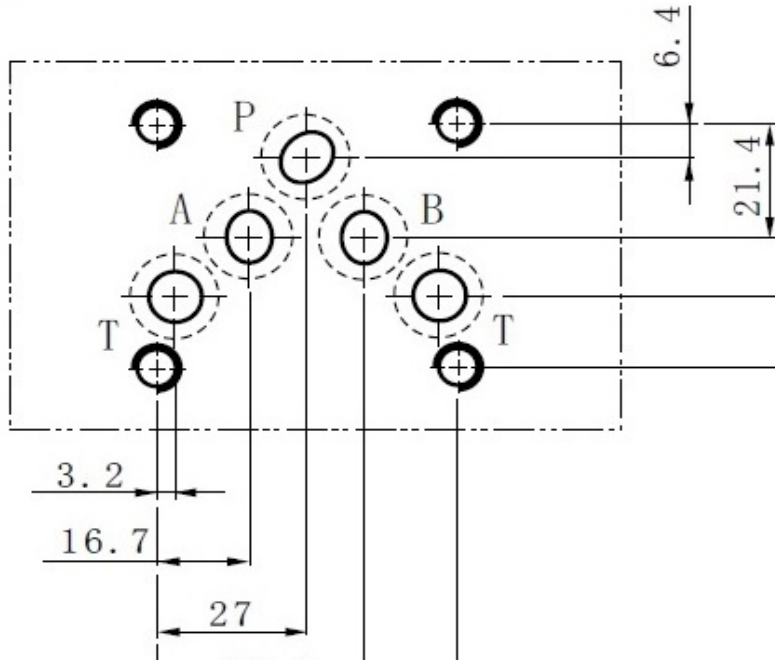

CETOP 5 NG10 MODULAR CHECK VALVE PRICE LIST		
PRODUCT REFERENCE	**DESCRIPTION**	**RRP**
FFC-03P-05-20	CETOP 5 MODULAR CHECK VALVE C/P 0.35BAR ON P	£89.04
FFC-03P-50-20	CETOP 5 MODULAR CHECK VALVE C/P 3.5BAR ON P	£89.04
FFC-03A-05-20	CETOP 5 MODULAR CHECK VALVE C/P 0.35BAR ON A	£89.04
FFC-03A-50-20	CETOP 5 MODULAR CHECK VALVE C/P 3.5BAR ON A	£89.04
FFC-03B-05-20	CETOP 5 MODULAR CHECK VALVE C/P 0.35BAR ON B	£89.04
FFC-03B-50-20	CETOP 5 MODULAR CHECK VALVE C/P 3.5BAR ON B	£89.04
FFC-03T-05-20	CETOP 5 MODULAR CHECK VALVE C/P 0.35BAR ON T	£89.04
FFC-03T-50-20	CETOP 5 MODULAR CHECK VALVE C/P 3.5BAR ON T	£89.04

FLOWFIT CETOP 5 NG10 MODULAR PILOT OPERATED CHECK VALVE

BRAND NEW PRODUCT
PLEASE SEE OUR WEBSITE FOR PHOTOGRAPHS

FLOWFIT CETOP 5 NG10 MODULAR PILOT OPERATED CHECK VALVE

The Flowfit modular pilot operated (P/O) check valve allows free flow in one direction and pilot pressure allows flow in the opposite direction.

Flowfit pilot operated check valves are available for the A or B ports individually, or the A and B ports combined. They can be specified with a cracking pressure of 0.35bar or 3.5bar depending on the system requirements

SPECIFICATION

Nominal Size: NG10
Maximum Flow Rate: 70 l/min
Maximum Pressure: 250 Bar
Seal Material:- NBR
Max Fluid Temperature: -20° to 70°C
Oil Viscosity: -2.8 to 380 mm2/s
Weight: 2.6kg

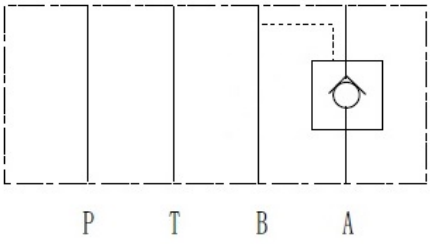

FFPCV-02A

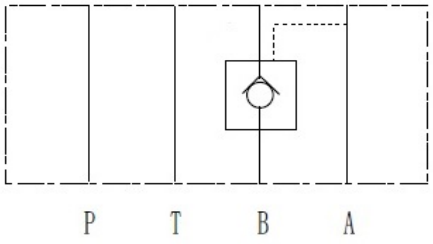

FFPCV-02B

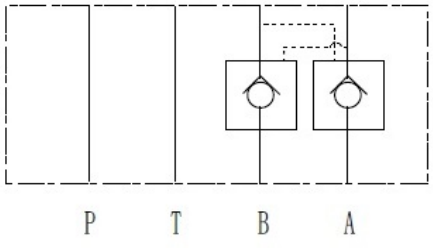

FFPCV-02W

DIMENSIONS

UNIT.mm

FFPCV-03

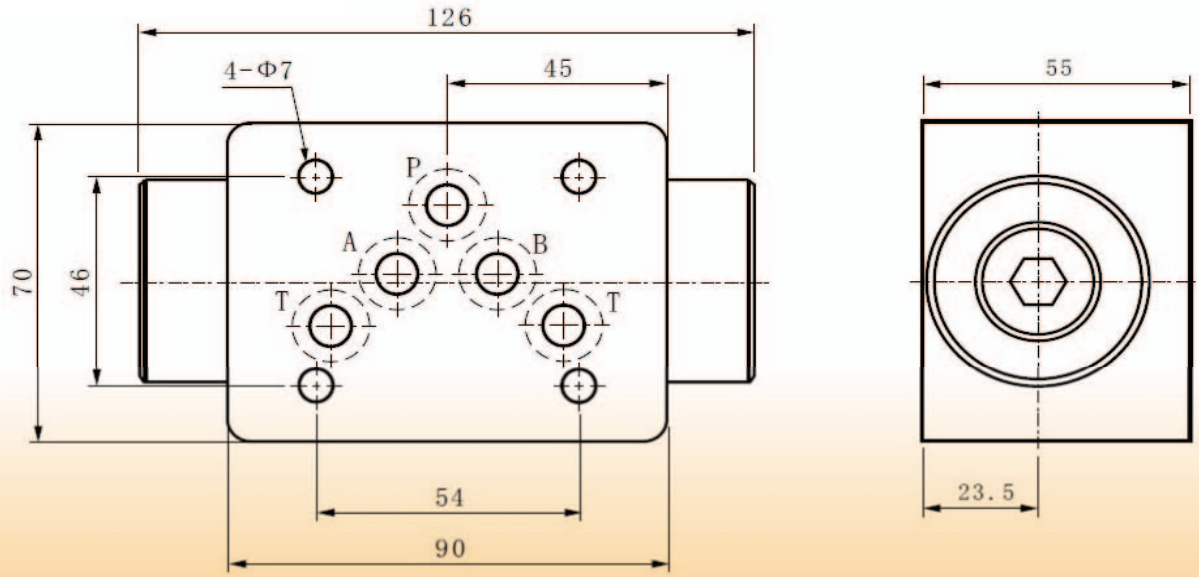

FLOWFIT CETOP 5 NG10 MODULAR PILOT OPERATED CHECK VALVE

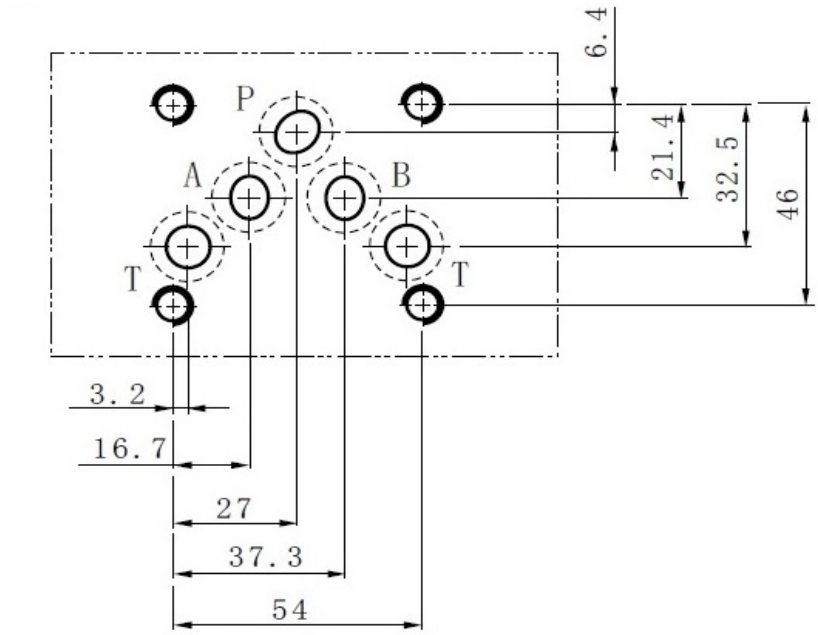

CETOP 5 NG10 MODULAR PILOT OPERATED CHECK VALVE PRICE LIST		
PRODUCT REFERENCE	**DESCRIPTION**	**RRP**
FFPCV-03A-05-20	CETOP 5 MODULAR P/O CHECK VALVE C/P 0.35BAR ON A	£137.38
FFPCV-03A-50-20	CETOP 5 MODULAR P/O CHECK VALVE C/P 3.5BAR ON A	£137.38
FFPCV-03B-05-20	CETOP 5 MODULAR P/O CHECK VALVE C/P 0.35BAR ON B	£137.38
FFPCV-03B-50-20	CETOP 5 MODULAR P/O CHECK VALVE C/P 3.5BAR ON B	£137.38
FFPCV-03W-05-20	CETOP 5 MODULAR P/O CHECK VALVE C/P 0.35BAR ON A & B	£169.18
FFPCV-03W-50-20	CETOP 5 MODULAR P/O CHECK VALVE C/P 3.5BAR ON A & B	£169.18

FLOWFIT CETOP 5 NG10 MODULAR FLOW CONTROL VALVE

BRAND NEW PRODUCT
PLEASE SEE OUR WEBSITE FOR PHOTOGRAPHS

FLOWFIT CETOP 5 NG10 MODULAR FLOW CONTROL VALVE WITH CHECK

The Flowfit modular flow control valves regulate the flow of oil through the circuit in one direction whilst allowing free flow in the opposite direction using a check valve.

Two types of valve are available; the first meters the flow of oil into the circuit (allowing free flow out), while the second meters the flow out of the circuit (allowing free flow in).

Flow on the metered side can be adjusted using the plastic knob (standard on all modular flow control valves) but for added security, valves can also be supplied with an adjustment screw that can be locked once the desired flow has been set (Available upon request).

SPECIFICATION

Nominal Size: NG6
Maximum Flow Rate: 70 l/min
Maximum Pressure: 250 Bar
Seal Material:- NBR
Max Fluid Temperature: -20° to 70°C
Oil Viscosity: -2.8 to 380 mm2/s
Weight: A, B 2.6kg
W 2.8kg
Manual Adjustment: Standard on all valves

METERED OUT

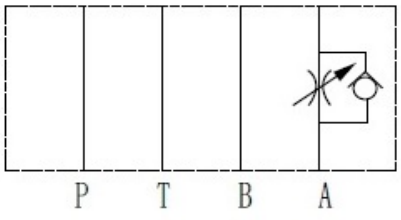

FFTCV-03A-K-20

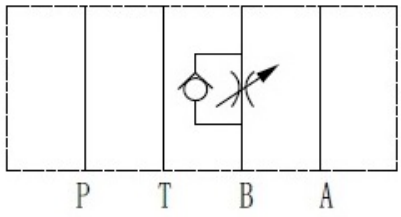

FFTCV-03B-K-20

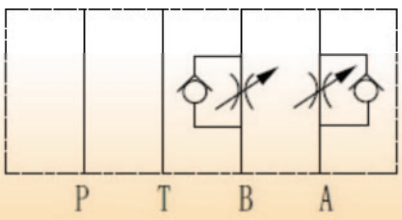

FFTCV-03W-K-20

METERED IN

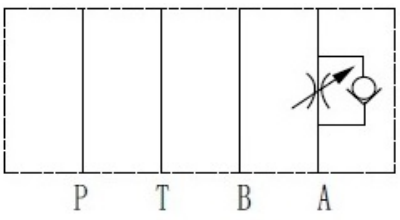

FFTCV-03A-K-I-20

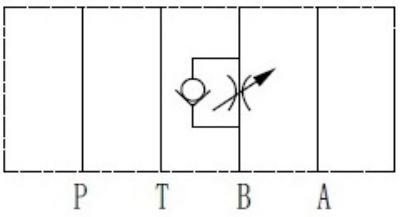

FFTCV-03B-K-I-20

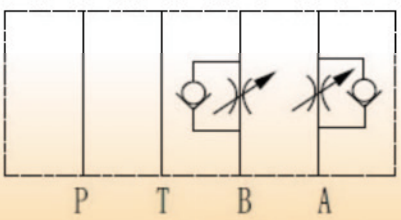

FFTCV-03W-K-I-20

FLOWFIT CETOP 5 NG10 MODULAR FLOW CONTROL VALVE

DIMENSIONS

UNIT.mm

FFTCV-03A

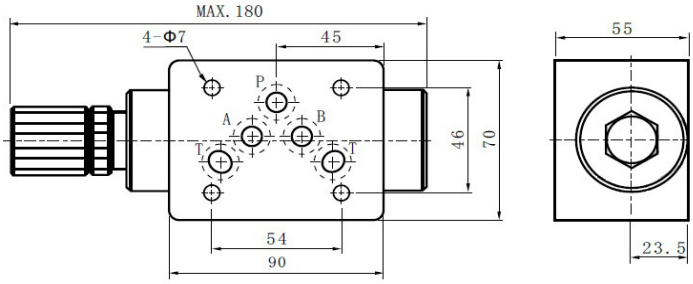

FFTCV-03B

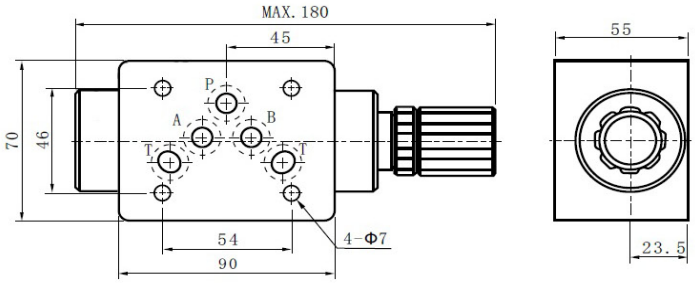

FFTCV-03W

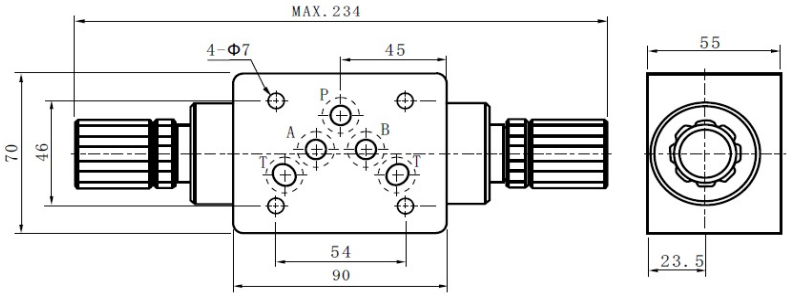

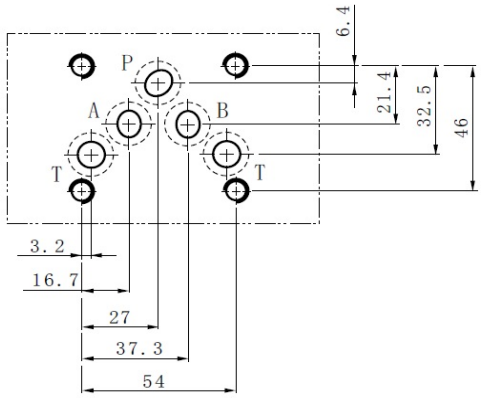

CETOP 5 NG10 MODULAR FLOW CONTROL VALVE PRICE LIST		
PRODUCT REFERENCE	**DESCRIPTION**	**RRP**
FFTCV-03A-K-20	CETOP 5 MODULAR FLOW CONTROL VALVE MTR OUT ON A PORT	£98.58
FFTCV-03A-K-I-20	CETOP 5 MODULAR LFOW CONTROL VALVE MTR IN ON A PORT	£98.58
FFTCV-03B-K-20	CETOP 5 MODULAR FLOW CONTROL VALVE MTR OUT ON B PORT	£98.58
FFTCV-03B-K-I-20	CETOP 5 MODULAR LFOW CONTROL VALVE MTR IN ON B PORT	£98.58
FFTCV-03W-K-20	CETOP 5 MODULAR FLOW CONTROL VALVE MTR OUT ON A & B PORT	£104.94
FFTCV-03W-K-I-20	CETOP 5 MODULAR LFOW CONTROL VALVE MTR IN ON A & B PORT	£104.94

FLOWFIT CETOP 5 NG10 STEEL PARALLEL CIRCUIT MANIFOLD

BRAND NEW PRODUCT
PLEASE SEE OUR WEBSITE FOR PHOTOGRAPHS

FLOWFIT CETOP 5 NG10 STEEL PARALLEL CIRCUIT MANIFOLD

The Flowfit CETOP 5 parallel circuit manifold is precision machined from a mild steel block with sizes of 1/2"BSP for A & B ports and 3/4"BSP for P & T ports.

Flowfit manifolds are available from 1 to 10 stations with a 1/4"BSP Gauge port machined as standard on the 2 station and above (not available on the 1 station manifold).

SPECIFICATION

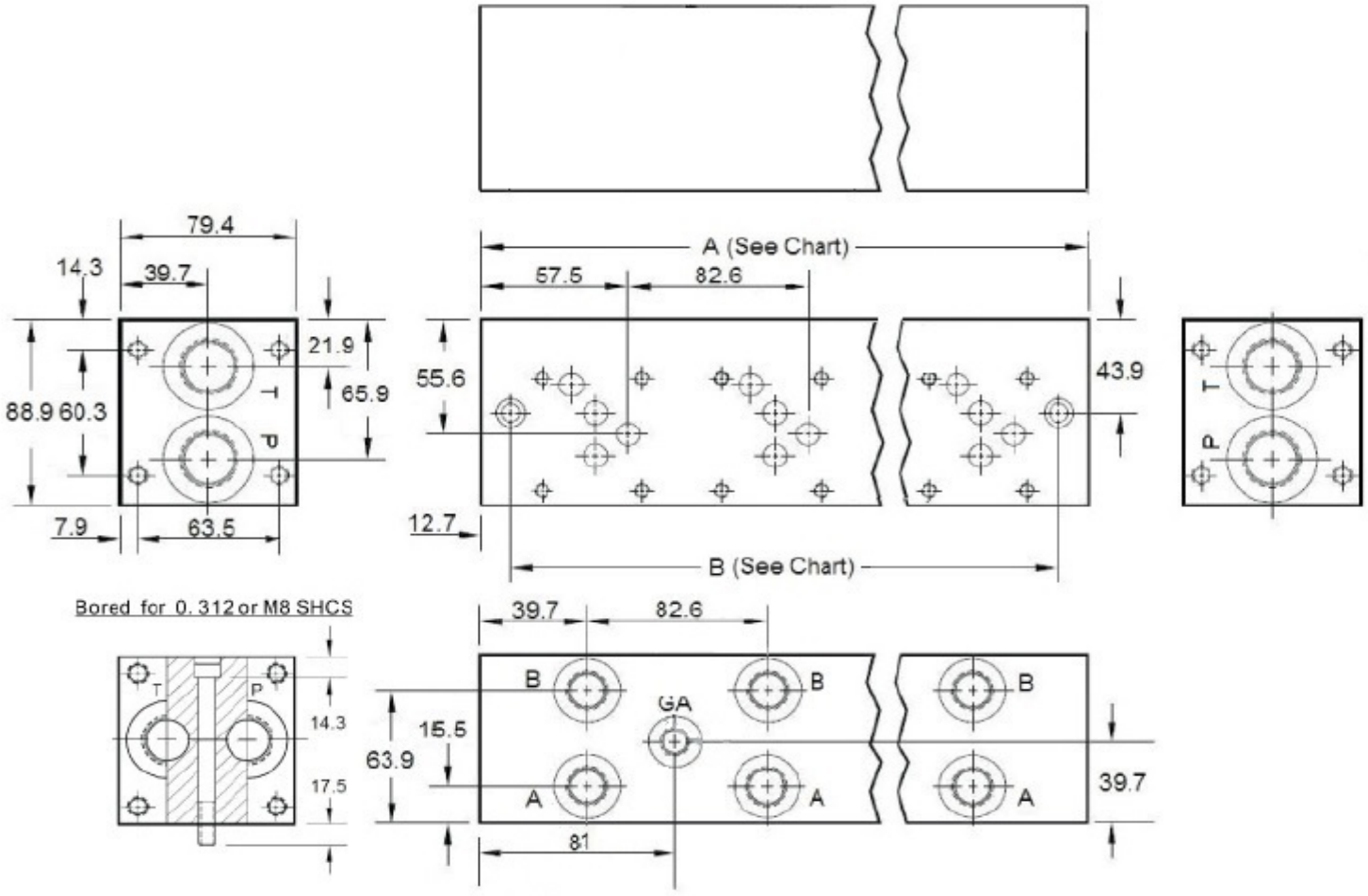

Parallel Circuit

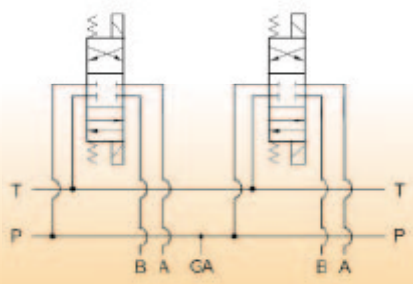

FLOWFIT CETOP 5 NG10 STEEL PARALLEL CIRCUIT MANIFOLD

WEIGHT/ DIMENSIONS	NUMBER OF STATIONS									
	1	2	3	4	5	6	7	8	9	10
WEIGHT (KGS)	4.03	8.03	12.09	16.12	20.15	24.18	28.21	32.24	36.27	40.3
LENGTH "A" (MM)	82.6	165.1	247.7	330.2	412.8	495.3	577.9	660.4	743	825.5
LENGTH "B" (MM)	57.2	139.7	222.3	304.8	387.4	469.9	552.5	635	717.6	800.1

NOTE: GAUGE PORT IS NOT AVAILABLE ON 1 STATION MANIFOLD

CETOP 5 NG10 STEEL MANIFOLD (WITHOUT RELIEF VALVE CAVITY) PRICE LIST

PRODUCT REFERENCE	DESCRIPTION	RRP
MD-05P-1-G	CETOP 5 1 STATION STEEL MANIFOLD NO RV CAVITY	£69.96
MD-05P-2-G	CETOP 5 2 STATION STEEL MANIFOLD NO RV CAVITY	£139.92
MD-05P-3-G	CETOP 5 3 STATION STEEL MANIFOLD NO RV CAVITY	£216.24
MD-05P-4-G	CETOP 5 4 STATION STEEL MANIFOLD NO RV CAVITY	£289.38
MD-05P-5-G	CETOP 5 5 STATION STEEL MANIFOLD NO RV CAVITY	£362.52
MD-05P-6-G	CETOP 5 6 STATION STEEL MANIFOLD NO RV CAVITY	£442.02
MD-05P-7-G	CETOP 5 7 STATION STEEL MANIFOLD NO RV CAVITY	£521.52
MD-05P-8-G	CETOP 5 8 STATION STEEL MANIFOLD NO RV CAVITY	£604.20
MD-05P-9-G	CETOP 5 9 STATION STEEL MANIFOLD NO RV CAVITY	£683.70
MD-05P-10-G	CETOP 5 10 STATION STEEL MANIFOLD NO RV CAVITY	£766.38

FLOWFIT CETOP 5 NG10 STEEL PARALLEL CIRCUIT MANIFOLD WITH RELIEF VALVE

FLOWFIT CETOP 5 NG10 STEEL PARALLEL CIRCUIT MANIFOLD WITH RELIEF VALVE CAVITY

The Flowfit CETOP 5 parallel circuit manifold is precision machined from a steel block with sizes of 3/8"BSP for A & B ports and 1/2"BSP for P & T ports. The manifold also comes with a machined port for a relief valve (available separately).

Flowfit manifolds are available from 1 to 10 stations with a 1/4"BSP Gauge port machined as standard on the 2 station and above (not available on the 1 station manifold).

SPECIFICATION

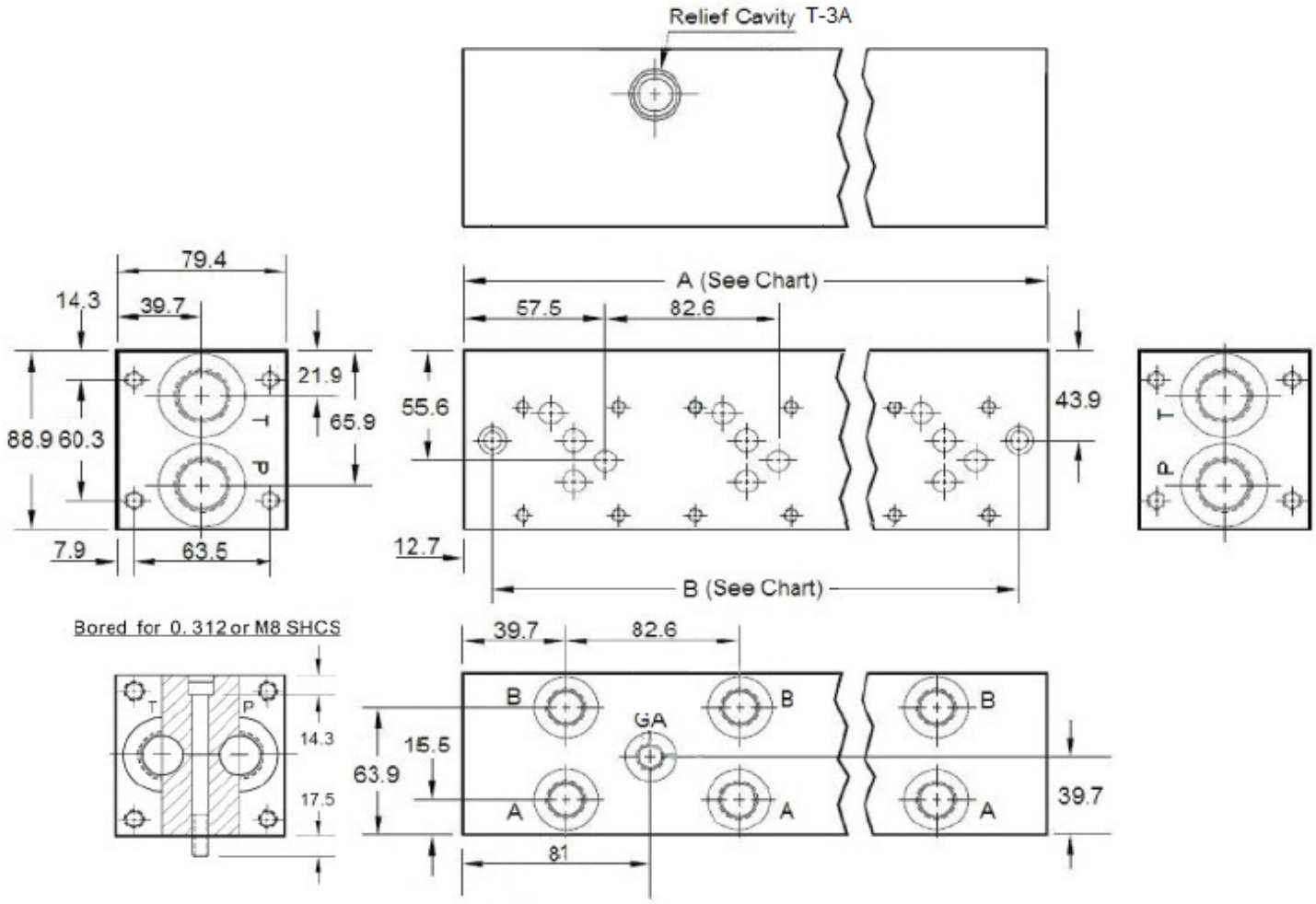

Parallel Circuit with Cavity

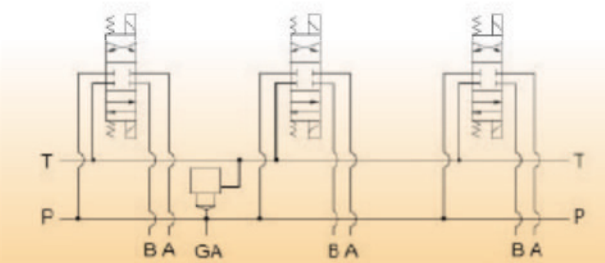

FLOWFIT CETOP 5 NG10 STEEL PARALLEL CIRCUIT MANIFOLD WITH RELIEF VALVE

WEIGHT/ DIMENSIONS	NUMBER OF STATIONS									
	1	2	3	4	5	6	7	8	9	10
WEIGHT (KGS)	4.03	8.06	12.09	16.12	20.15	24.18	28.21	32.24	36.27	40.3
LENGTH "A" (MM)	114.3	165.1	247.7	330.2	412.8	495.3	577.9	660.4	743	825.5
LENGTH "B" (MM)	88.9	139.7	222.3	304.8	387.4	469.9	552.5	635	717.6	800.1

NOTE: GAUGE PORT IS NOT AVAILABLE ON 1 STATION MANIFOLD

CETOP 5 NG10 STEEL MANIFOLD (WITH RELIEF VALVE CAVITY) PRICE LIST

PRODUCT REFERENCE	DESCRIPTION	RRP
MD-05P-1-G-S	CETOP 5 1 STATION STEEL MANIFOLD WITH RV CAVITY	£129.55
MD-05P-2-G-S	CETOP 5 2 STATION STEEL MANIFOLD WITH RV CAVITY	£174.38
MD-05P-3-G-S	CETOP 5 3 STATION STEEL MANIFOLD WITH RV CAVITY	£247.59
MD-05P-4-G-S	CETOP 5 4 STATION STEEL MANIFOLD WITH RV CAVITY	£322.44
MD-05P-5-G-S	CETOP 5 5 STATION STEEL MANIFOLD WITH RV CAVITY	£398.94
MD-05P-6-G-S	CETOP 5 6 STATION STEEL MANIFOLD WITH RV CAVITY	£477.08
MD-05P-7-G-S	CETOP 5 7 STATION STEEL MANIFOLD WITH RV CAVITY	£556.87
MD-05P-8-G-S	CETOP 5 8 STATION STEEL MANIFOLD WITH RV CAVITY	£638.31
MD-05P-9-G-S	CETOP 5 9 STATION STEEL MANIFOLD WITH RV CAVITY	£721.38
MD-05P-10-G-S	CETOP 5 10 STATION STEEL MANIFOLD WITH RV CAVITY	£806.11
SNH-RDFALAN	CETOP 5 RELIEF VALVE	£84.97

FLOWFIT CETOP 5 NG10 STEEL SUBPLATE WITH SIDE PORTS

BRAND NEW PRODUCT
PLEASE SEE OUR WEBSITE FOR PHOTOGRAPHS

FLOWFIT CETOP 5 NG10 STEEL SUBPLATE WITH SIDE PORTS

The Flowfit CETOP 5 subplate is machined from steel and comes with 1/2"BSP side ports.

SPECIFICATION

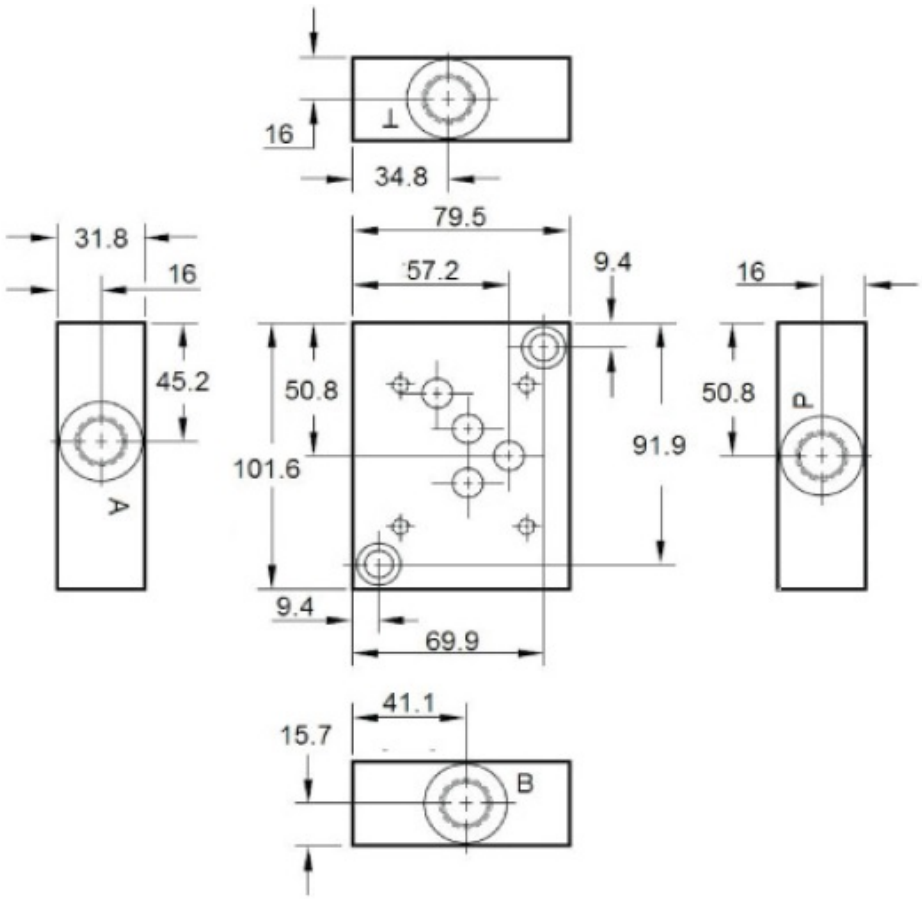

CETOP 5 NG10 STEEL SUBPLATE WITH SIDE ENTRY PRICE LIST		
PRODUCT REFERENCE	DESCRIPTION	RRP
D-05-SP-S-8G	CETOP 5 SUBPLATE SIDE ENTRY 1/2" BSPP PORTED	£42.39

FLOWFIT CETOP 5 NG10 STEEL SUBPLATE WITH BASE PORTS

BRAND NEW PRODUCT
PLEASE SEE OUR WEBSITE FOR PHOTOGRAPHS

FLOWFIT CETOP 5 NG10 STEEL SUBPLATE WITH BASE PORTS

The Flowfit CETOP 5 subplate is machined from steel and comes with 1/2"BSP base ports.

SPECIFICATION

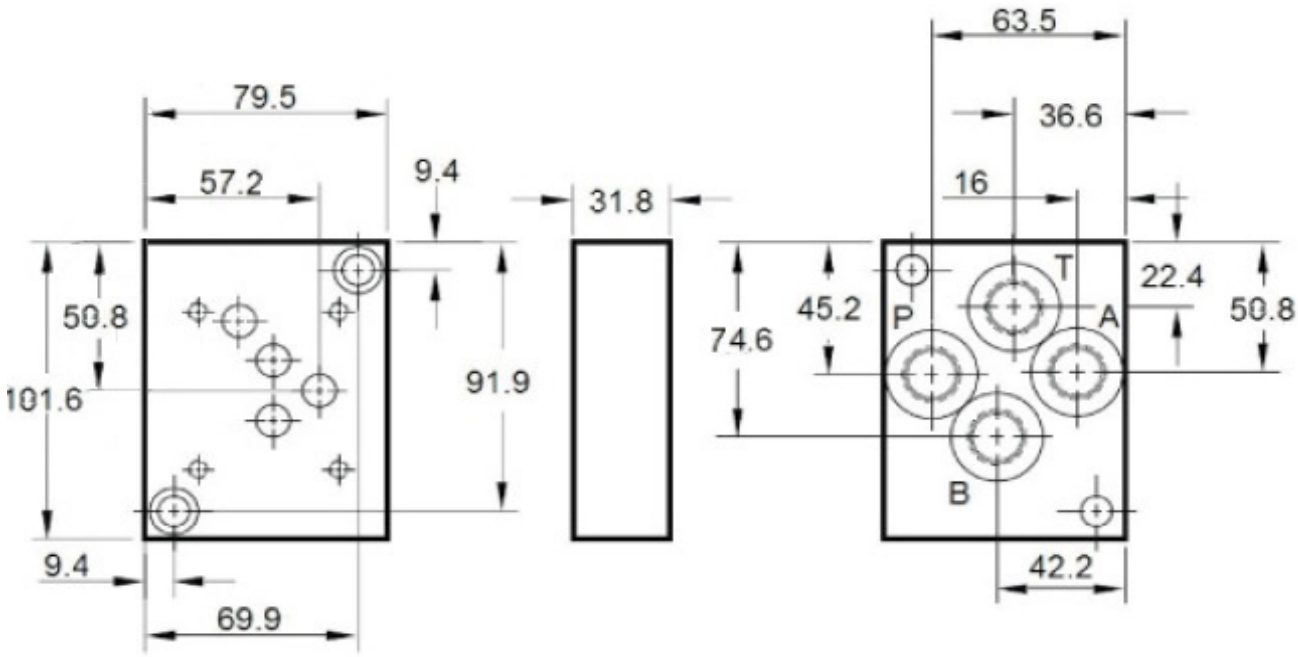

CETOP 5 NG10 STEEL SUBPLATE WITH BASE ENTRY PRICE LIST		
PRODUCT REFERENCE	DESCRIPTION	RRP
D-05-SP-B-8G	CETOP 5 SUBPLATE BASE ENTRY 1/2" BSPP PORTED	£42.39

FLOWFIT CETOP 5 NG10 STEEL COVER PLATE

BRAND NEW PRODUCT
PLEASE SEE OUR WEBSITE FOR PHOTOGRAPHS

FLOWFIT CETOP 5 NG10 STEEL COVER PLATE

The Flowfit steel cover plate replaces a CETOP 5 solenoid valve on the steel manifold, providing a pressure blank to enable the remaining stations to operate.

SPECIFICATION

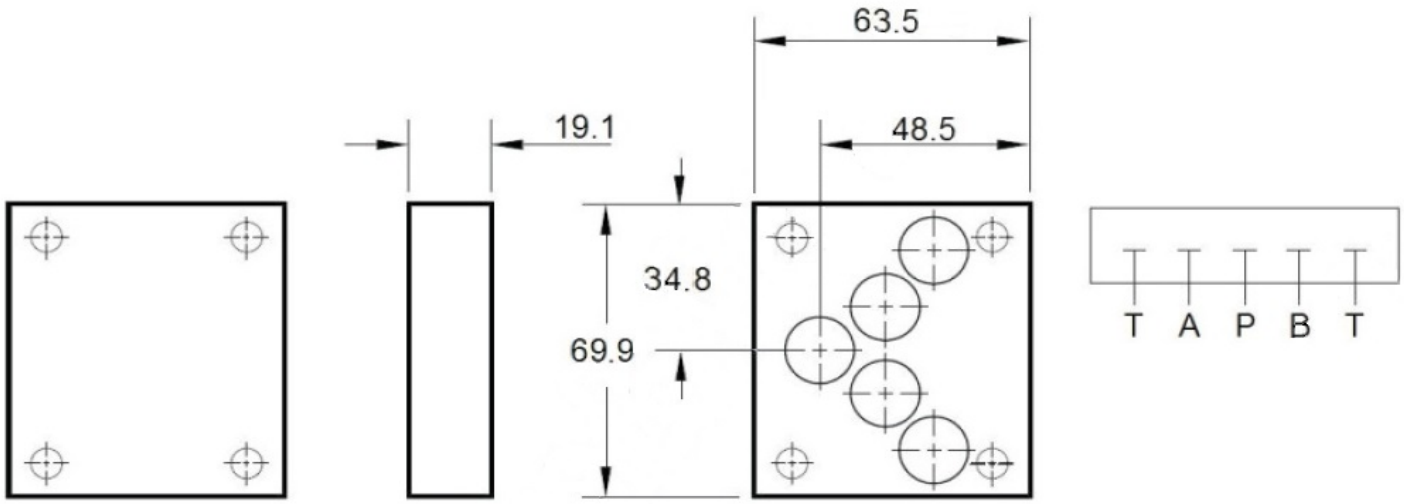

CETOP 3 NG6 STEEL COVER PLATE PRICE LIST		
PRODUCT REFERENCE	DESCRIPTION	RRP
D-05-CP-G	CETOP 5 COVER PLATE	£13.57

SOLENOID DIVERTER VALVES • SECTION NP5

FLOWFIT SOLENOID DIVERTER VALVES

FLOWFIT SDV3 - 3 WAY SOLENOID DIVERTERS..... NP78
FLOWFIT SDV06 - 6 WAY SOLENOID DIVERTERS..... NP79
FLOWFIT SDV10 - 6 WAY SOLENOID DIVERTERS..... NP81
FLOWFIT DIVERTER VALVE HANDLEVER MICROSWITCH KIT.... NP82

FLOWFIT®

SOLENOID DIVERTER VALVES

SDV3
3 WAY SOLENOID DIVERTERS MAX FLOW 80L/MIN

Diverters are used to add an extra facility to the directional control valve when it is needed for a sequence of operations such as a safety operation or to control a selected hydraulic cylinder.
No drainline required.

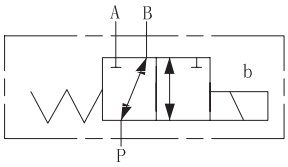

SDV3

DC12=12V, DC24=24V
DC48=48V (SPECIAL REQUEST)
AC110=110V (SPECIAL REQUEST)
AC220=220V(SPECIAL REQUEST)

N= With manual override

Z5L=Herschmann plug with light

Special requirements to be briefly specified

Threaded connections
M18=M18X1.5 } SPECIAL
M22=M22X1.5 } REQUEST
M20=M20X1.5
G38 =G3/8 STANDARD
G12 =G1/2

Technical Data

Type Model	SDV3
Max Operating pressure (bar)	210
Max Flow rate (L/min)	80

SDV3 Installation Dimensions

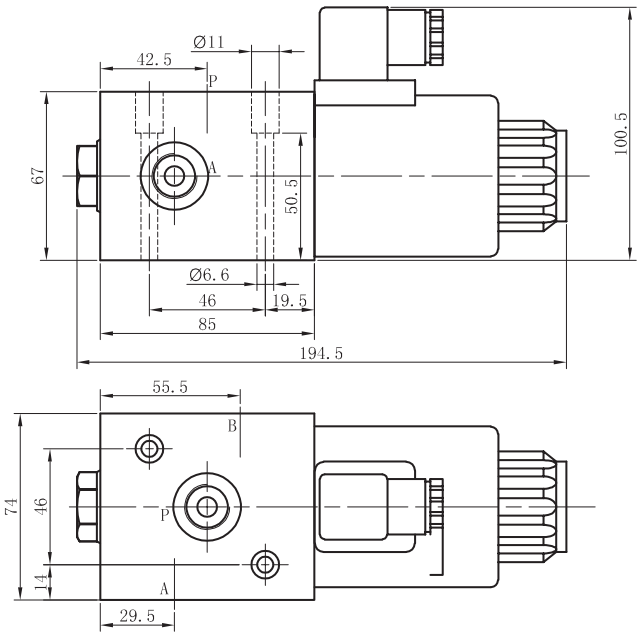

- **COMPACT**
- **EASY TO INSTALL**
- **EXCELLENT PRICE**
- **OEM TOP DEMANDED FLOWFIT PRODUCT**

- **MANUAL OVERRIDE STANDARD**

PART NUMBER	VOLTAGE	PORT SIZE BSP	FLOW RATE L/MIN	MAX PRESSURE BAR	WEIGHT (KG)	PRICE
SDV3DC12NZ5LG38	12 VDC	3/8"	80	210	4.23	£114.48
SDV3DC24NZ5LG38	24 VDC	3/8"	80	210	4.23	£114.48
SDV3DC12NZ5LG12	12 VDC	1/2"	80	210	4.23	£131.44
SDV3DC24NZ5LG12	24 VDC	1/2"	80	210	4.23	£131.44

FOR DIVERTER VALVE HANDLEVER MICROSWITCH KIT SEE PAGES 82

SOLENOID DIVERTER VALVES

SDV06
6 WAY SOLENOID DIVERTERS MAX FLOW 50L/MIN

Diverters are used to add an extra facility to the directional control valve when it is needed for a sequence of operations such as a safety operation or to control a selected hydraulic cylinder.

The stackable circuit selector valves type SDV06 allow one single drive of 6 users with 5 diverters connected in series.
Please note the drainline must be connected back to tank at all times.

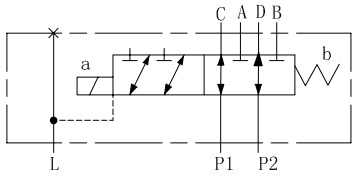

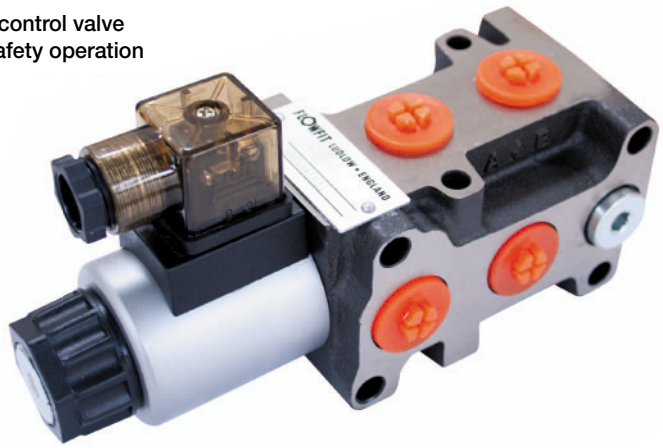

Max.p ressure	250b ar
Max. flow	50 l/min
Overlap	negative
Hydraulic fluids	Mineral oils DIN 51524
Fluid viscosity	10 ÷ 500 mm²/s
Fluid temperature	-25°C ÷ 75°C
Ambient temperature	-25°C ÷ 60°C
Max. Contamination level	class 10 in accordance
Oil cleaniness	NAS with 1638 with filter ß25≥75 NAS 1638 class 9 and ISO 4406 class 20/18/15
Valve Body Surface Finish	Phosphate surface finish

SDV	06	6	W	I / *	*	**	

Stackable diverter valve

Size 06

No of ways single element (6 Way)

Threaded connectors 3/8" BSP

External Drain

No of elements: 1/2/3/4/5

VARIANTS
00=No variant
V1=Viton
R1=recitifier

Voltage L=12V M=24V
DC48=48V AC110=110V
AC220=220V

FOR DIVERTER VALVE HANDLEVER MICROSWITCH KIT SEE PAGES 82

SOLENOID DIVERTER VALVES

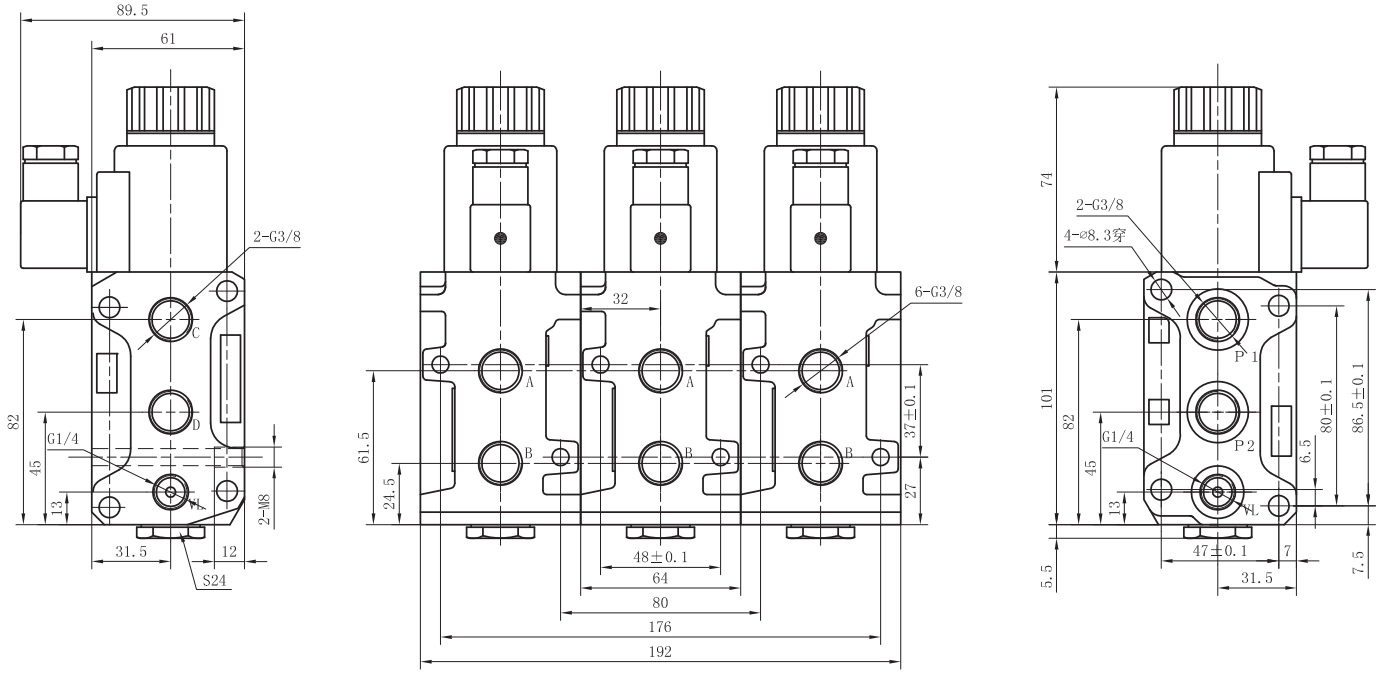

DIVERTER	WAY	A	B
NO. OF DIVERTERS	NO. OF WAY	LENGTH IN MM	
1	6	64	86
2	8	128	150
3	10	192	214
4	12	256	278
5	14	320	342

- **COMPACT**
- **EASY TO INSTALL**
- **EXCELLENT PRICE**
- **OEM TOP DEMANDED FLOWFIT PRODUCT**

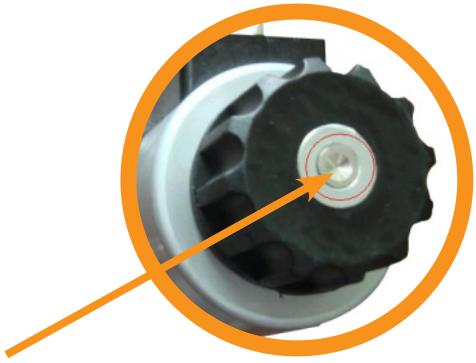

- **MANUAL OVERRIDE STANDARD**

PART NUMBER	VOLTAGE	PORT SIZE BSP	FLOW RATE L/MIN	MAX PRESSURE BAR	WEIGHT (KG)	PRICE
SDV066WI1LE1	12 V	3/8"	50	250	3	£178.08
SDV066WI1ME1	24 V	3/8"	50	250	3	£178.08

FOR DIVERTER VALVE HANDLEVER MICROSWITCH KIT SEE PAGES 82

SOLENOID DIVERTER VALVES

SDV10
6 WAY SOLENOID DIVERTERS MAX FLOW 80L/MIN. 315 BAR RATED

Diverters are used to add an extra facility to the directional control valve when it is needed for a sequence of operations such as a safety operation or to control a selected hydraulic cylinder.
Please note drainline must be connected back to tank at all times.

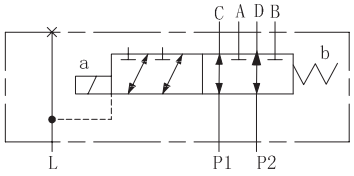

SDV10 ___ ___ ___ ___

DC12=12V, DC24=24V
DC48=48V (SPECIAL REQUEST)
AC110=110V (SPECIAL REQUEST)
AC220=220V(SPECIAL REQUEST)

N= With manual override

Z5L=Herschmann plug with light

THREADED CONNECTIONS
12 =G1/2 /G1/4 STANDARD
34 =G3/4 /G1/4 STANDARD
M22=M22X1.5/M14X1.5 } SPECIAL
M27=M27X2/M14X1.5 } REQUEST

Nr. OF UNITS
N1= (one unit) N2= (two units)
N3= (three units) N4= (four units)

Technical Data

Type Model	SDV10
Max Operating pressure (bar)	315
Max Flow rate (L/min)	80

SDV10 Installation Dimensions

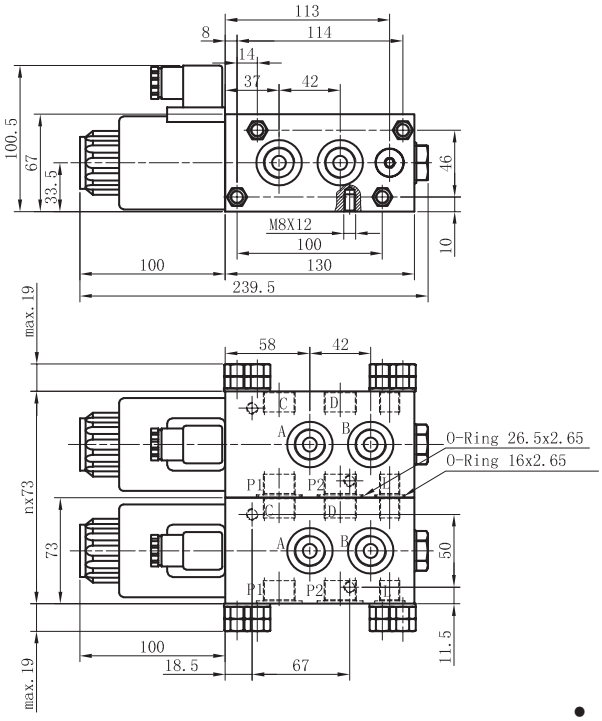

- **COMPACT**
- **EASY TO INSTALL**
- **EXCELLENT PRICE**
- **OEM TOP DEMANDED FLOWFIT PRODUCT**

- **MANUAL OVERRIDE STANDARD**

PART NUMBER	VOLTAGE	PORT SIZE BSP	DRAIN PORT BSP	FLOW RATE L/MIN	MAX PRESSURE BAR	WEIGHT (KG)	PRICE
SDV10DC12NZ5LNI12	12 VDC	1/2"	1/4"	80	315	5.14	£178.08
SDV10DC24NZ5LNI12	24 VDC	1/2"	1/4"	80	315	5.14	£178.08
SDV10DC12NZ5LNI34	12 VDC	3/4"	1/4"	80	315	5.14	£178.08
SDV10DC24NZ5LNI34	24 VDC	3/4"	1/4"	80	315	5.14	£178.08

FOR DIVERTER VALVE HANDLEVER MICROSWITCH KIT SEE PAGES 82

DIVERTER VALVE HANDLEVER MIRCOSWITCH KIT

WORKING CONDITIONS FOR THE MICROSWITCH

Rod Material - Zinc coated steel
Knob Material - Thermoplastic
Ambient Temperature from - 20˚C to 80˚C
Weather Protection - ZZ003185=IP67
ZZ003186=IP54

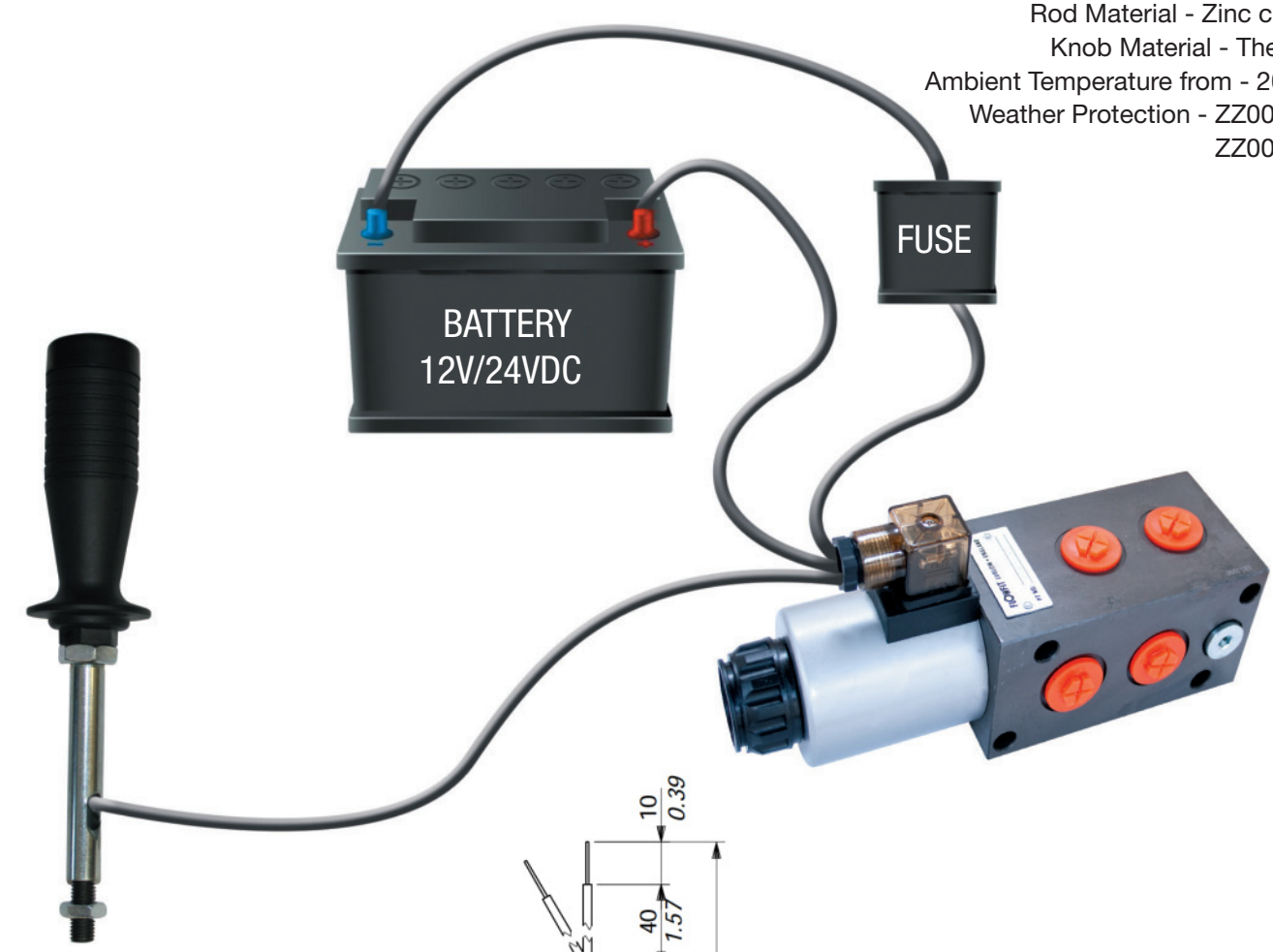

M10 - Thread, see adaptor Kit for M8 Threads below

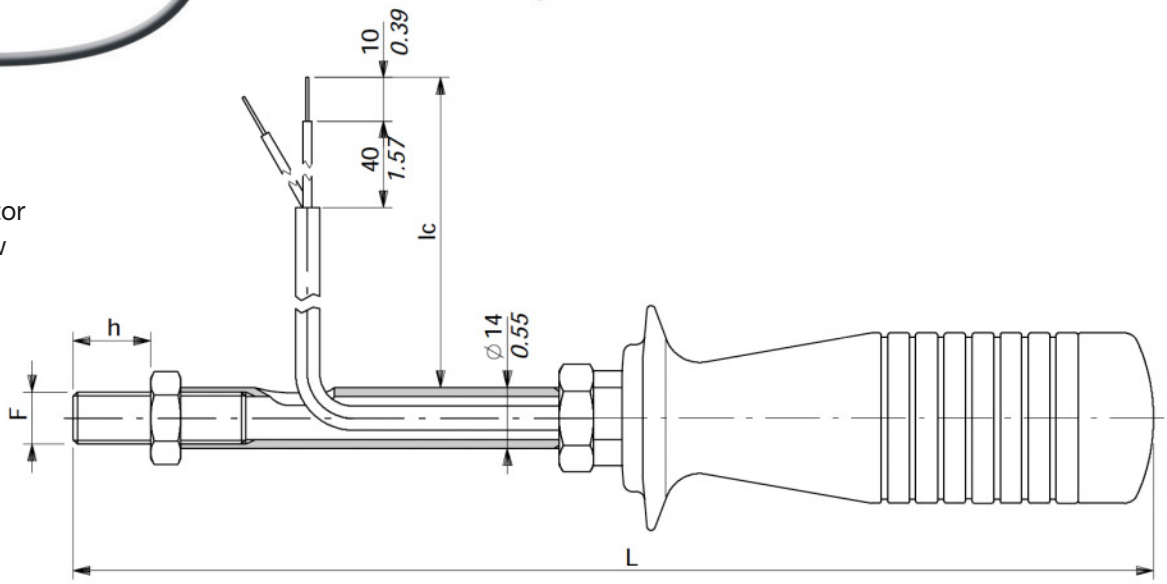

Dimension Information

PART NUMBER	F	h (mm)	l (mm)	lc mm
ZZ003185	M10	20	250	425
ZZ003186	M10	19	200	430

Thread Adaptor Kit

PART NUMBER	DESCRIPTION	PRICE
6473210	M8 MALE X M10 FEMALE THREAD ADAPTOR ZINC PLATED	£4.13

Prices for Handlever Microswitch only

PART NUMBER	OPERATION OF SWITCH	THREAD TYPE	LENGTH (MM)	WEIGHT (KG)	PRICE
ZZ003185	PUSH BUTTON ON/OFF	M10	250	0.5	£94.34
ZZ003186	ROCKER SWITCH ON/OFF DETENT 2 POSITION	M10	250	0.5	£104.94

FLOWFIT HYDRAULIC QUICK RELEASE COUPLINGS

FLOWFIT HYDRAULIC ISO A QUICK RELEASE COUPLINGS MALE & FEMALE ENDS NP84
FLOWFIT HYDRAULIC FLAT FACE QUICK RELEASE COUPLINGS MALE & FEMALE ENDS..... NP87
FLOWFIT HYDRAULIC TRAILER BRAKE QUICK RELEASE COUPLINGS..... NP90

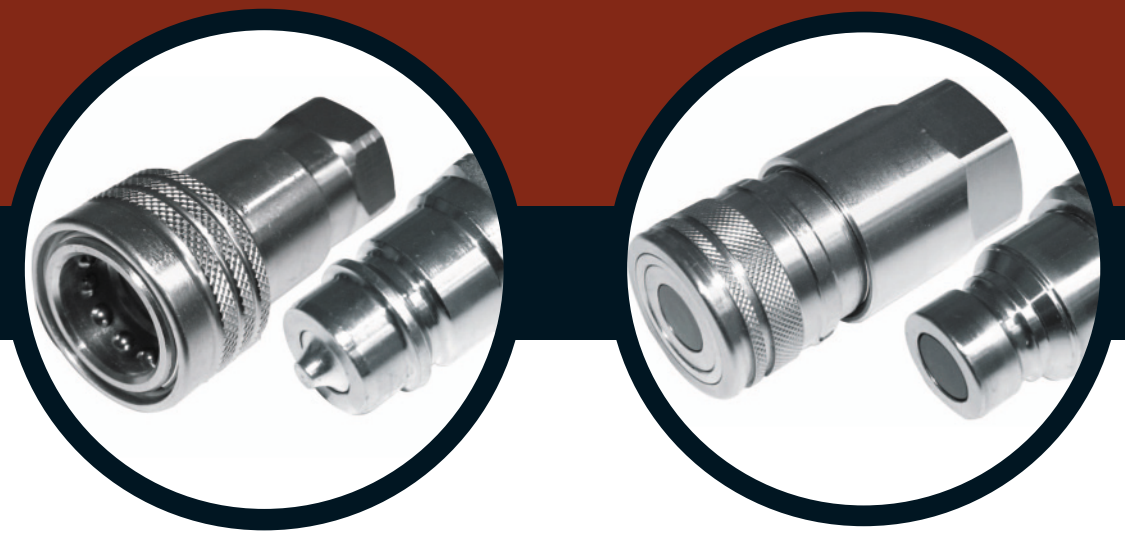

FLOWFIT®

FLOWFIT HYDRAULIC ISO A QUICK RELEASE COUPLINGS MALE & FEMALE ENDS

Flowfit hydraulic ISO A quick release couplings are used in a wide range of hydraulic applications including construction equipment manufacturing machinery and on plant systems. They can be found where fluid transfer lines need to be connected and disconnected for operation or maintenance of equipment.

Flowfit Hydraulic ISO A quick release couplings interchange with:

Parker6600
Perfecting K
Safeway S56
Snap Tite 61
Tomco A5600
Aeroquip FD56
DNP PAV
Stucchi BIR

Please refer to the specification table below to ensure the correct size is selected.

Red plastic plugs and caps for female/male couplings up to 1"BSP and aluminium plugs and caps for female/male couplings from 1 1/4" - 2"BSP available to protect and stop dirt entering the quick releases and your hydraulic circuit.

INSTRUCTIONS FOR USE

Prior to connecting ensure that the mating parts of the couplings are clean and free of dirt to avoid contamination of the hydraulic system.

To connect, pull the collar on the female coupling back and insert the male coupling as far as it will go. Release the collar to lock the couplings together.

To disconnect, pull the collar on the female coupling back and allow the male coupling to disengage.

CAUTION

Under no circumstances should the couplings be connected or disconnected with pressure in the hydraulic system.

Whilst in use, the couplings may become hot (up to +100°C). Protective gloves should be worn when disconnecting.

To reduce the risk of contamination, the use of protective plugs and caps on the couplings when they are disconnected is strongly recommended (available separately).

SPECIFICATION

Materials: zinc-plated carbon steel body
Valve: Poppet Type
Back-up ring: in pure Teflon
Seals: standard in nitrile NBR. On request FKM,EPDM and VMQ seals
Working temperature: with standard seals -25°C+ 125°C

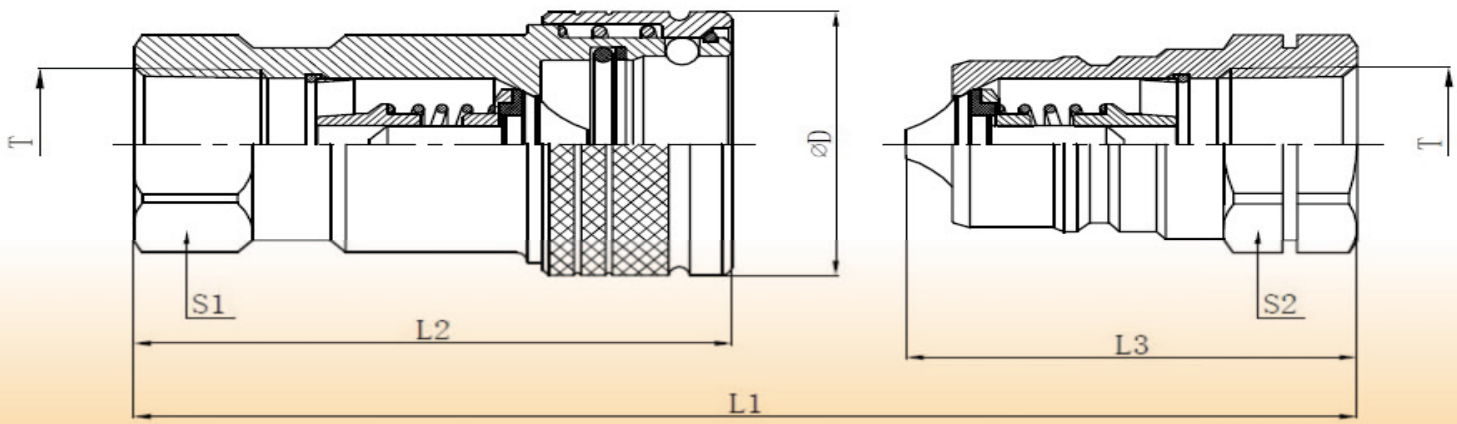

FLOWFIT HYDRAULIC ISO A QUICK RELEASE COUPLINGS MALE & FEMALE ENDS

FLOWFIT®

(F)=Female (M)=Male

DN	ISO	L1	L2	L3	ØD	S1	S2	T	PRODUCT REFERENCE (F)	PRODUCT REFERENCE (M)
04	6.3	70.0	49.0	35.0	26.2	19.0	19.0	1/4" BSP	QRCISOAF14	QRCISOAM14
06	10	85.0	60.5	42.5	31.0	22.0	22.0	3/8" BSP	QRCISOAF38	QRCISOAM38
08	12.5	94.0	68.5	46.5	38.0	27.0	27.0	1/2" BSP	QRCISOAF12	QRCISOAM12
12	20	115.0	85.0	57.5	46.0	34.0	34.0	3/4" BSP	QRCISOAF34	QRCISOAM34
16	25	131.5	99.5	65.5	52.0	41.0	41.0	1" BSP	QRCISOAF1	QRCISOAM1
20	31.5	148.0	116.0	74.0	70.0	50.0	50.0	1/4"- BSP	QRCISOAF114	QRCISOAM114
24	40	168.0	136.5	85.0	83.0	60.0	60.0	1/2"- BSP	QRCISOAF112	QRCISOAM112
32	50	200.7	160.0	100.0	99.0	75.0	75.0	2" BSP	QRCISOAF2	QRCISOAM2

TECHNICAL DATA

NOMINAL SIZE		MAX. WORKING PRESSURE	MAX FLOW	RATED FLOW	MIN BURST PRESSURE			FLUID SPILLAGE
					MALE	FEMALE	COUPLED	
DN	ISO	(BAR)	(L/M)	(L/M)	(BAR)	(BAR)	(BAR)	(CC)
04	6.3	315	12	12	1510	1760	1450	0.5
06	10	315	46	23	1470	1520	1590	1.9
08	12.5	250	90	45	1000	1460	1240	2.7
12	20	250	148	106	900	1530	1040	9.3
16	25	200	200	189	1300	960	1300	16
20	31.5	200	378	288	1140	850	1090	30
24	40	160	750	379	810	790	820	54
32	50	100	1000	757	650	960	1100	120

FLOW CURVE/PRESSURE DROP

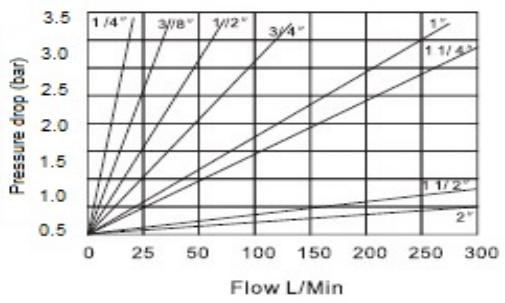

ACCESSORIES

DN	ISO	FEMALE DUST PLUG	MALE DUST CAP	MATERIAL
04	6.3	PPQRCISOAF14	PPQRCISOAM14	PLASTIC
06	10	PPQRCISOAF38	PPQRCISOAM38	PLASTIC
08	12.5	PPQRCISOAF12	PPQRCISOAM12	PLASTIC
12	20	PPQRCISOAF34	PPQRCISOAM34	PLASTIC
16	25	PPQRCISOAF1	PPQRCISOAM1	PLASTIC
20	31.5	ALQRCISOAF114	ALQRCISOAM114	ALUMINIUM
24	40	ALQRCISOAF112	ALQRCISOAM112	ALUMINIUM
32	50	ALQRCISOAF2	ALQRCISOAM2	ALUMINIUM

See next page for prices

FLOWFIT HYDRAULIC ISO A QUICK RELEASE COUPLINGS MALE & FEMALE ENDS

ISO A QUICK RELEASE COUPLING PRICE LIST

PRODUCT REFERENCE	DESCRIPTION	RRP
QRCISOAF14	HYDRAULIC ISO A QUICK RELEASE COUPLING FEMALE 1/4" BSP, DN04, ISO 6.3, 315 BAR RATED, 12 L/MIN	£4.22
QRCISOAM14	HYDRAULIC ISO A QUICK RELEASE COUPLING MALE 1/4" BSP, DN04, ISO 6.3, 315 BAR RATED, 12 L/MIN	£2.25
QRCISOAF38	HYDRAULIC ISO A QUICK RELEASE COUPLING FEMALE 3/8" BSP, DN06, ISO 10, 315 BAR RATED, 23 L/MIN	£4.56
QRCISOAM38	HYDRAULIC ISO A QUICK RELEASE COUPLING MALE 3/8" BSP, DN06, ISO 10, 315 BAR RATED, 23 L/MIN	£2.14
QRCISOAF12	HYDRAULIC ISO A QUICK RELEASE COUPLING FEMALE 1/2" BSP, DN08, ISO 12.5, 250 BAR RATED,45 L/MIN	£5.87
QRCISOAM12	HYDRAULIC ISO A QUICK RELEASE COUPLING MALE 1/2" BSP, DN08, ISO 12.5, 250 BAR RATED,45 L/MIN	£2.16
QRCISOAF34	HYDRAULIC ISO A QUICK RELEASE COUPLING FEMALE 3/4" BSP, DN12, ISO 20, 250 BAR RATED, 106 L/MIN	£10.30
QRCISOAM34	HYDRAULIC ISO A QUICK RELEASE COUPLING MALE 3/4" BSP, DN12, ISO 20, 250 BAR RATED, 106 L/MIN	£5.43
QRCISOAF1	HYDRAULIC ISO A QUICK RELEASE COUPLING FEMALE 1" BSP, DN16, ISO 25, 200 BAR RATED, 189 L/MIN	£17.26
QRCISOAM1	HYDRAULIC ISO A QUICK RELEASE COUPLING MALE 1" BSP, DN16, ISO 25, 200 BAR RATED, 189 L/MIN	£8.37
QRCISOAF114	HYDRAULIC ISO A QUICK RELEASE COUPLING FEMALE 1 1/4" BSP, DN20, ISO 31.5, 200 BAR RATED, 288 L/MIN	£28.05
QRCISOAM114	HYDRAULIC ISO A QUICK RELEASE COUPLING MALE 1 1/4" BSP, DN20, ISO 31.5, 200 BAR RATED, 288 L/MIN	£18.02
QRCISOAF112	HYDRAULIC ISO A QUICK RELEASE COUPLING FEMALE 1 1/2 BSP, DN24, ISO 40, 160 BAR RATED, 379 L/MIN	£82.68
QRCISOAM112	HYDRAULIC ISO A QUICK RELEASE COUPLING MALE 1 1/2" BSP, DN24, ISO 40, 160 BAR RATED, 379 L/MIN	£40.28
QRCISOAF2	HYDRAULIC ISO A QUICK RELEASE COUPLING FEMALE 2" BSP, DN32, ISO 50, 200 BAR RATED 757 L/MIN	£146.28
QRCISOAM2	HYDRAULIC ISO A QUICK RELEASE COUPLING MALE 2" BSP, DN32, ISO 50, 200 BAR RATED 757 L/MIN	£68.90

ACCESSORIES PRICE LIST

PRODUCT REFERENCE	DESCRIPTION	RRP
PPQRCISOAF14	PLASTIC DUST PLUG FOR 1/4"BSP, DN04 ISO A FEMALE QRC	£0.85
PPQRCISOAM14	PLASTIC DUST CAP FOR 1/4"BSP, DN04 ISO A MALE QRC	£0.85
PPQRCISOAF38	PLASTIC DUST PLUG FOR 3/8"BSP, DN06 ISO A FEMALE QRC	£1.02
PPQRCISOAM38	PLASTIC DUST CAP FOR 3/8"BSP, DN06 ISO A MALE QRC	£1.02
PPQRCISOAF12	PLASTIC DUST PLUG FOR 1/2"BSP, DN08 ISO A FEMALE QRC	£1.02
PPQRCISOAM12	PLASTIC DUST CAP FOR 1/2"BSP, DN08 ISO A MALE QRC	£1.02
PPQRCISOAF34	PLASTIC DUST PLUG FOR 3/4"BSP, DN12 ISO A FEMALE QRC	£1.10
PPQRCISOAM34	PLASTIC DUST CAP FOR 3/4"BSP, DN12 ISO A MALE QRC	£1.10
PPQRCISOAF1	PLASTIC DUST PLUG FOR 1"BSP, DN16 ISO A FEMALE QRC	£1.95
PPQRCISOAM1	PLASTIC DUST CAP FOR 1"BSP, DN16 ISO A MALE QRC	£1.95
ALQRCISOAF114	ALUMINIUM DUST PLUG FOR 1 1/4"BSP, DN20 ISO A FEMALE QRC	£21.86
ALQRCISOAM114	ALUMINIUM DUST CAP FOR 1 1/4"BSP, DN20 ISO A MALE QRC	£20.41
ALQRCISOAF112	ALUMINIUM DUST PLUG FOR 1 1/2"BSP, DN24 ISO A FEMALE QRC	£22.97
ALQRCISOAM112	ALUMINIUM DUST CAP FOR 1 1/2"BSP, DN24 ISO A MALE QRC	£22.74
ALQRCISOAF2	ALUMINIUM DUST PLUG FOR 2"BSP, DN32 ISO A FEMALE QRC	£35.38
ALQRCISOAM2	ALUMINIUM DUST CAP FOR 2"BSP, DN32 ISO A MALE QRC	£34.80

FLOWFIT HYDRAULIC FLAT FACE QUICK RELEASE COUPLINGS MALE & FEMALE ENDS

FLOWFIT®

Flowfit hydraulic flat face quick release couplings of this series represent the first genuine revolution in the field of applications for flat face quick release couplings. Where previous models performed well at low operating pressures and with limited fluctuations in pressure, these new couplings can be used in applications typified by high operating pressures, high flow rates and low pressure drops, offering the same guarantees as components of conventional design.

Flowfit couplings are manufactured to the new ISO 16028 standard. This guarantees:

Interchangeability with other couplings responding to the new standard,
Maximum operating pressure 350 bar for all sizes. dependable operation of the coupling and low pressure drops are guaranteed, irrespective of the flow direction, male to female or female to male.

Flowfit Hydraulic Flat Face Quick Release Couplings Interchange with:

Parker FE
Safeway S56
Faster 2FFI
Aeroquip FD 89
Snap Tite 74
DNP PLT4
Tomco FE
Stucchi FIRG

Please refer to the specification table below to ensure the correct size is selected.

Red plastic caps for female/male couplings up to 1"BSP available to protect and stop dirt entering the quick releases and your hydraulic circuit.

WARNING

These couplings are unsuitable for use on Pulse/ Hammer applications.

INSTRUCTIONS FOR USE

Prior to connecting ensure that the mating surfaces of the couplings are clean and free of dirt to avoid contamination of the hydraulic system.

To connect, push both couplings together until the locking mechanism engages.

For added security and to prevent accidental disconnection, rotate the collar on the female coupling a quarter turn.

To disconnect, rotate the collar on the female coupling until the notch aligns with protruding ball bearing then pull the collar back, allowing the couplings to disengage.

CAUTION

Under no circumstances should the couplings be connected or disconnected with pressure in the hydraulic system.

Whilst in use, the couplings may become hot (up to +100°C). Protective gloves should be worn when disconnecting.

To reduce the risk of contamination, the use of protective caps on the couplings when they are disconnected is strongly recommended (available separately).

Do not use on Pulse/Hammer applications!

SPECIFICATION

Materials: zinc-plated carbon steel body
Seals: standard in nitrile NBR. On request FKM,EPDM and VMQ seals
Back-up ring: in pure Teflon
Working temperature: with standard seals -25˚c + 125˚c

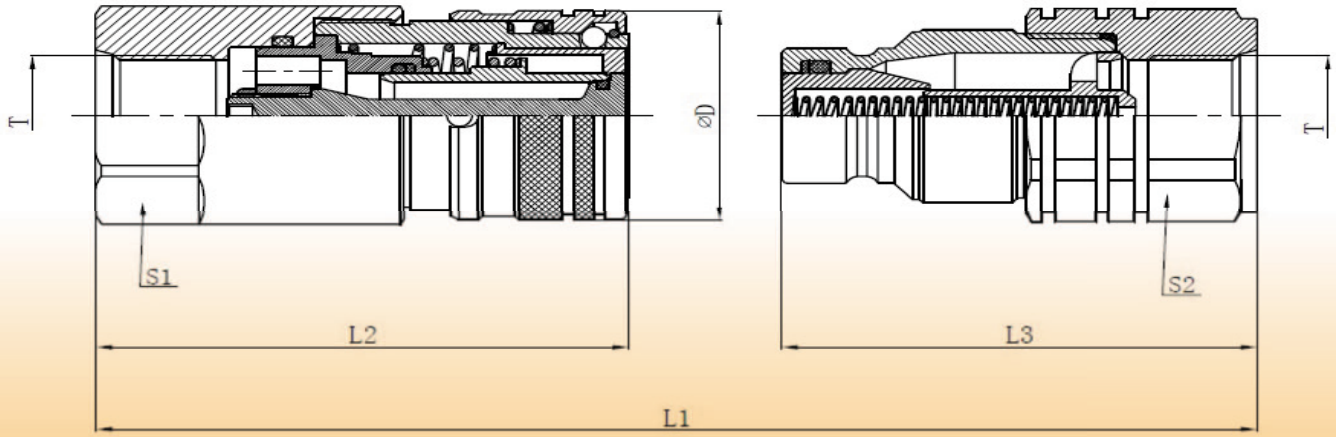

FLOWFIT HYDRAULIC FLAT FACE QUICK RELEASE COUPLINGS MALE & FEMALE ENDS

(F)=Female (M)=Male

DN	ISO	L1	L2	L3	ØD	S1	S2	T	PRODUCT REFERENCE (F)	PRODUCT REFERENCE (M)
04	6.3	100.0	58.5	53.3	28.0	22.0	22.0	1/4" BSP	QRCFFF14	QRCFFM14
06	10	121.0	73.5	61.2	32.0	30.0	30.0	3/8" BSP	QRCFFF38	QRCFFM38
06	10	121.0	73.5	61.2	32.0	30.0	30.0	1/2" BSP	QRCFFF12-38	QRCFFM12-38
08	12.5	143.5	73.4	74.0	38.0	36.0	36.0	1/2" BSP	QRCFFF12	QRCFFM12
08	12.5	143.5	73.4	74.0	38.0	36.0	36.0	3/4" BSP	QRCFFF34-12	QRCFFM34-12
12	20	154.0	95.0	87.0	48.0	41.0	41.0	3/4" BSP	QRCFFF34	QRCFFM34
12	20	154.0	95.0	87.0	48.0	41.0	41.0	1" BSP	QRCFFF1-34	QRCFFM1-34
16	25	177.0	109.5	92.0	55.0	50.0	50.0	1" BSP	QRCFFF1	QRCFFM1
16	25	177.0	109.5	92.0	55.0	50.0	50.0	1 1/4"BSP	QRCFFF1620114	QRCFFM1620114
24	40	224.0	133.0	120.0	80.0	65.0	70.0	1-1/2" BSP	QRCFFF24112	QRCFFM24112
32	50	284.0	147.5	173.0	102.0	80.0	80.0	2" BSP	QRCFFF322	QRCFFM322

TECHNICAL DATA

NOMINAL SIZE		MAX. WORKING PRESSURE	MAX FLOW	RATED FLOW	MIN BURST PRESSURE			FLUID SPILLAGE
					MALE	FEMALE	COUPLED	
DN	ISO	(BAR)	(L/M)	(L/M)	(BAR)	(BAR)	(BAR)	(CC)
04	6.3	400	24	12	1900	1900	1430	0.008
06	10	350	46	23	1560	1780	1610	0.01
08	12.5	350	90	45	1700	1590	1900	0.012
12	20	350	170	100	1660	1470	1840	0.02
16	25	350	378	189	1470	1400	1530	0.03
24	40	250	750	379	1000	1000	1000	0.25
32	50	250	1000	758	1000	1000	1000	0.35

FLOW CURVE/PRESSURE DROP

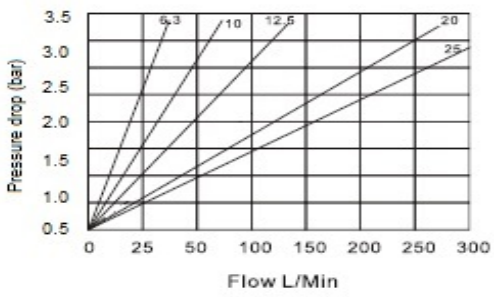

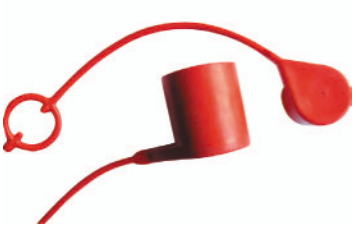

ACCESSORIES

DN	ISO	FEMALE DUST PLUG	MALE DUST CAP	MATERIAL
04	6.3	PPQRCFFF14	PPQRCFFM14	PLASTIC
06	10	PPQRCFFF38	PPQRCFFM38	PLASTIC
12	20	PPQRCFFF34	PPQRCFFM34	PLASTIC
16	25	PPQRCFFF1	PPQRCFFM1	PLASTIC

See next page for prices

FLOWFIT HYDRAULIC FLAT FACE QUICK RELEASE COUPLINGS MALE & FEMALE ENDS

FLOWFIT®

FLAT FACE QUICK RELEASE COUPLING PRICE LIST

PRODUCT REFERENCE	DESCRIPTION	RRP
QRCFFF14	HYDRAULIC FLAT FACE QUICK RELEASE COUPLING FEMALE 1/4" BSP, DN04, ISO 6.3, 400 BAR RATED, 12 L/MIN	£12.97
QRCFFM14	HYDRAULIC FLAT FACE QUICK RELEASE COUPLING MALE 1/4" BSP, DN04, ISO 6.3, 400 BAR RATED, 12 L/MIN	£5.70
QRCFFF38	HYDRAULIC FLAT FACE QUICK RELEASE COUPLING FEMALE 3/8" BSP, DN06, ISO10, 350 BAR RATED, 23 L/MIN	£16.96
QRCFFM38	HYDRAULIC FLAT FACE QUICK RELEASE COUPLING MALE 3/8" BSP, DN06, ISO10, 350 BAR RATED, 23 L/MIN	£8.48
QRCFFF12-38	HYDRAULIC FLAT FACE QUICK RELEASE COUPLING FEMALE 1/2" BSP, DN06, ISO10, 350 BAR RATED, 23 L/MIN	£16.96
QRCFFM12-38	HYDRAULIC FLAT FACE QUICK RELEASE COUPLING MALE 1/2" BSP, DN06, ISO10, 350 BAR RATED, 23 L/MIN	£8.48
QRCFFF12	HYDRAULIC FLAT FACE QUICK RELEASE COUPLING FEMALE 1/2" BSP, DN08, ISO 12.5, 350 BAR RATED, 45 L/MIN	£21.75
QRCFFM12	HYDRAULIC FLAT FACE QUICK RELEASE COUPLING MALE 1/2" BSP, DN08, ISO 12.5, 350 BAR RATED, 45 L/MIN	£10.71
QRCFFF34-12	HYDRAULIC FLAT FACE QUICK RELEASE COUPLING FEMALE 3/4" BSP, DN08, ISO 12.5, 350 BAR RATED, 45 L/MIN	£21.75
QRCFFM34-12	HYDRAULIC FLAT FACE QUICK RELEASE COUPLING MALE 3/4" BSP, DN08, ISO 12.5, 350 BAR RATED, 45 L/MIN	£10.71
QRCFFF34	HYDRAULIC FLAT FACE QUICK RELEASE COUPLING FEMALE 3/4" BSP, DN12, ISO 20, 350 BAR RATED, 100 L/MIN	£36.44
QRCFFM34	HYDRAULIC FLAT FACE QUICK RELEASE COUPLING MALE 3/4" BSP, DN12, ISO 20, 350 BAR RATED, 100 L/MIN	£22.81
QRCFFF1-34	HYDRAULIC FLAT FACE QUICK RELEASE COUPLING FEMALE 1" BSP, DN12, ISO 20, 350 BAR RATED, 100 L/MIN	£36.44
QRCFFM1-34	HYDRAULIC FLAT FACE QUICK RELEASE COUPLING MALE 1" BSP, DN12, ISO 20, 350 BAR RATED, 100 L/MIN	£22.81
QRCFFF1	HYDRAULIC FLAT FACE QUICK RELEASE COUPLING FEMALE 1" BSP, DN16, ISO 25, 350 BAR RATED, 189 L/MIN	£53.58
QRCFFM1	HYDRAULIC FLAT FACE QUICK RELEASE COUPLING MALE 1" BSP, DN16, ISO 25, 350 BAR RATED, 189 L/MIN	£29.04
QRCFFF1620114	HYDRAULIC FLAT FACE QUICK RELEASE COUPLING FEMALE 1 1/4" BSP, DN16/DN20, ISO 25, 350 BAR RATED 189 L/MIN	£63.76
QRCFFM1620114	HYDRAULIC FLAT FACE QUICK RELEASE COUPLING MALE 1 1/4" BSP, DN16/DN20, ISO 25, 350 BAR RATED 189 L/MIN	£29.04
QRCFFF24112	HYDRAULIC FLAT FACE QUICK RELEASE COUPLING FEMALE 1 1/2" BSP, DN24, ISO 40, 250 BAR, 379 L/MIN	£202.64
QRCFFM24112	HYDRAULIC FLAT FACE QUICK RELEASE COUPLING MALE 1 1/2" BSP, DN24, ISO 40, 250 BAR, 379 L/MIN	£104.03
QRCFFF322	HYDRAULIC FLAT FACE QUICK RELEASE COUPLING FEMALE 2" BSP, DN32, 250 BAR RATED, 758 L/MIN	£394.66
QRCFFM322	HYDRAULIC FLAT FACE QUICK RELEASE COUPLING MALE 2" BSP, DN32, 250 BAR RATED, 758 L/MIN	£209.29

ACCESSORIES PRICE LIST

PRODUCT REFERENCE	DESCRIPTION	RRP
PPQRCFFF14	PLASTIC DUST CAP FOR 1/4"BSP, DN04 FLAT FACE FEMALE QRC	£1.02
PPQRCFFM14	PLASTIC DUST CAP FOR 1/4"BSP,DN04 FLAT FACE MALE QRC	£1.02
PPQRCFFF38	PLASTIC DUST CAP FOR 3/8"BSP, DN06 FLAT FACE FEMALE QRC AND 1/2"BSP, DN06 FLAT FACE FEMALE QRC	£1.10
PPQRCFFM38	PLASTIC DUST CAP FOR 3/8"BSP, DN06 FLAT FACE MALE QRC AND 1/2"BSP, DN06 FLAT FACE MALE QRC	£1.10
PPQRCFFF12	PLASTIC DUST CAP FOR 1/2"BSP, DN08 FLAT FACE FEMALE QRC AND 3/4"BSP, DN08 FLAT FACE FEMALE QRC	£1.27
PPQRCFFM12	PLASTIC DUST CAP FOR 1/2"BSP, DN08 FLAT FACE MALE QRC AND 3/4"BSP, DN08 FLAT FACE MALE QRC	£1.27
PPQRCFFF34	PLASTIC DUST CAP FOR 3/4"BSP, DN12 FLAT FACE FEMALE QRC AND 1"BSP, DN12 FLAT FACE FEMALE QRC	£1.48
PPQRCFFM34	PLASTIC DUST CAP FOR 3/4"BSP, DN12 FLAT FACE MALE QRC AND 1"BSP, DN12 FLAT FACE MALE QRC	£1.48
PPQRCFFF1	PLASTIC DUST CAP FOR 1"BSP, DN16 FLAT FACE FEMALE QRC	£2.25
PPQRCFFM1	PLASTIC DUST CAP FOR 1"BSP, DN16 FLAT FACE MALE QRC	£2.25

FLOWFIT HYDRAULIC TRAILER BRAKE QUICK RELEASE COUPLINGS

Flowfit hydraulic trailer brake quick release couplings are mainly used in the agricultural sector for hydraulic braking systems.

Flowfit Hydraulic Trailer Brake Quick Release Couplings Interchange with:

NFU 16-006/68
DNP PFT
Parker 5676

Please refer to the specification table below to ensure the correct size is selected.

A grey plastic cap for the male couplings and a steel parking plug for the female coupling areavailable to protect and stop dirt entering the quick releases and your hydraulic circuit.

INSTRUCTIONS FOR USE

Prior to connecting ensure that the mating parts of the couplings are clean and free of dirt to avoid contamination of the hydraulic system.

To connect, pull the collar on the female coupling back and insert the male coupling as far as it will go. Release the collar to lock the couplings together.

To disconnect, pull the collar on the female coupling back and allow the male coupling to disengage.

CAUTION

Under no circumstances should the couplings be connected or disconnected with pressure in the hydraulic system.

To reduce the risk of contamination, the use of protective plugs and caps on the couplings when they are disconnected is strongly recommended (available separately).

SPECIFICATION

Materials: zinc-plated carbon steel body
Valve: Flat valve type
Back-up ring: in pure Teflon
Seals: standard in nitrile NBR. On request FKM,EPDM and VMQ seals
Working temperature: with standard seals -25°C+ 125°C

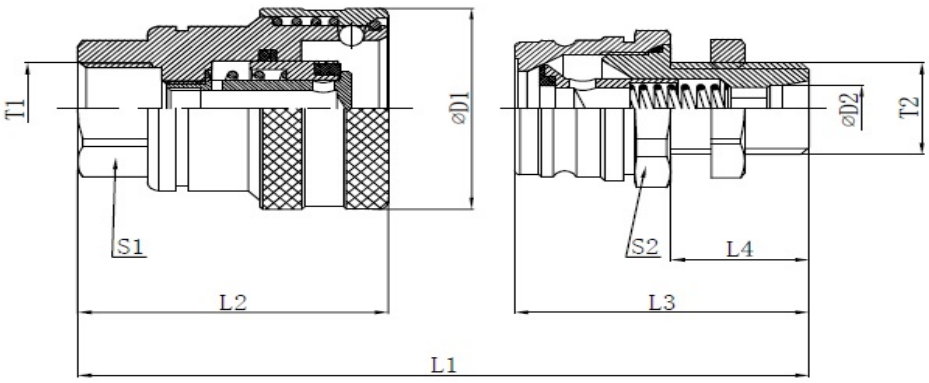

FEMALE TO MALE WITH BULKHEAD

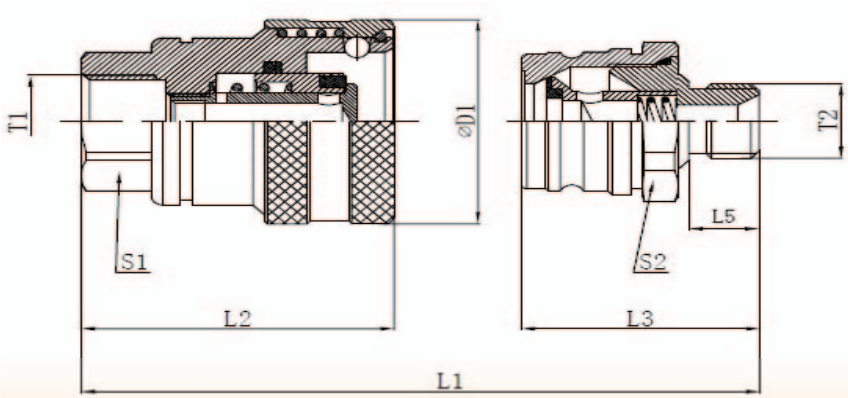

FEMALE TO MALE WITH MALE THREAD

FLOWFIT HYDRAULIC TRAILER BRAKE QUICK RELEASE COUPLINGS

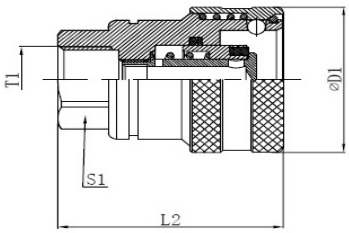

FEMALE TRAILER BREAK QUICK RELEASE COUPLING						
DN	ISO	L2	D1	S1	T1	PRODUCT REFERENCE
08	12.5	56.0	44.0	27.0	3/8" BSP	QRCTBF38
					1/2" BSP	QRCTBF12
					M18X1.5	QRCTBFM18

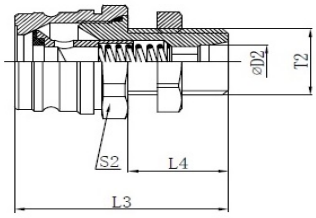

MALE TRAILER BRAKE QUICK RELEASE COUPLING WITH BULKHEAD CONNECTION							
DN	ISO	L3	L4	S2	D2	T2	PRODUCT REFERENCE
8.0	12.5	51.0	23.0	32.0	12.0	M18X1.5	QRCTBBMM18
					15.0	M22X1.5	QRCTBBMM22
COMBINED LENGTH WITH FEMALE TRAILER BRAKE COUPLING (L1) = 91.5							

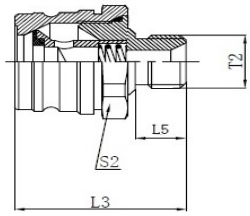

MALE TRAILER BRAKE QUICK RELEASE COUPLING WITH MALE THREAD						
DN	ISO	L3	L5	S2	T2	PRODUCT REFERENCE
8.0	12.5	48.0	15.0	32.0	1/2" BSP	QRCTBM12
COMBINED LENGTH WITH FEMALE TRAILER BRAKE COUPLING (L1) = 88.5						

TECHNICAL DATA

NOMINAL SIZE		MAX.WORKING PRESSURE	RATED FLOW	MIN BURST PRESSURE			FLUID SPILLAGE
				MALE	FEMALE	COUPLED	
DN	ISO	(BAR)	(L/M)	(BAR)	(BAR)	(BAR)	(CC)
08	12.5	150	24	900	620	930	0.05

ACCESSORIES

DN	ISO	FEMALE DUST PLUG	MALE DUST CAP	MATERIAL
08	12.5		QRCTBMPVC	PLASTIC
		QRCTBFS		STEEL

TRAILER BRAKE QUICK RELEASE COUPLING PRICE LIST

PRODUCT REFERENCE	DESCRIPTION	RRP
QRCTBF38	TRAILER BRAKE QRC FEMALE 3/8" BSP DN08, 150 BAR RATED 24 L/MIN	£7.84
QRCTBF12	TRAILER BRAKE QRC FEMALE 1/2" BSP DN08, 150 BAR RATED 24 L/MIN	£7.84
QRCTBFM18	TRAILER BRAKE QRC FEMALE M18X1.5 DN08, 150 BAR RATED 24 L/MIN	£7.84
QRCTBBMM18	TRAILER BRAKE QRC MALE M18X1.5 BULKHEAD DN08, 150 BAR RATED 24 L/MIN	£6.78
QRCTBBMM22	TRAILER BRAKE QRC MALE M22X1.5 BULKHEAD DN08, 150 BAR RATED 24 L/MIN	£6.78
QRCTBM12	TRAILER BRAKE QRC MALE 1/2"BSP DN08, 150 BAR RATED 24 L/MIN	£6.78

ACCESSORIES PRICE LIST

PRODUCT REFERENCE	DESCRIPTION	RRP
QRCTBMPVC	TRAILER BRAKE PLASTIC MALE DUST CAP COVER DN08 (GREY)	£0.80
QRCTBFS	TRAILER BRAKE FEMALE STEEL DUST PLUG COUPLER COVER	£1.48

FLOWFIT

SHOP NOW OPEN 6 DAYS A WEEK

WHY NOT VISIT US AND DISCUSS YOUR REQUIREMENTS WITH OUR QUALIFIED STAFF?

HYDRAULIC CARTRIDGE VALVES

SINGLE OVERCENTRE VALVE FOR CLOSED CENTRE, TYPE A 94
DOUBLE OVERCENTRE VALVE FLANGEABLE, CLOSED CENTRE ...95
SINGLE OVERCENTRE VALVE FLANGEABLE, CLOSED CENTRE.....96
DOUBLE OVERCENTRE VALVE FLANGEABLE, CLOSED CENTRE....97
20 RELIEF VALVE CARTRIDGE.....98
35 RELIEF VALVE CARTRIDGE.....99
80 RELIEF VALVE CARTRIDGE.....100
120 RELIEF VALVE CARTRIDGE.....101
IN LINE MOUNTING RELIEF VALVE.....102
IN LINE MOUNTING RELIEF VALVE.....103
IN LINE MOUNTING RELIEF VALVE.....104
PRESSURE REDUCING VALVE, DIRECT ACTING POPPET.....105
DIRECT ACTING REDUCING VALVE WITH CHECK VALVE.....106
COMPACT DOUBLE PILOT OPERATED CHECK VALVE.....107
MALE CHECK VALVES.....108
BIDIRECTIONAL CHECK VALVE.....109
DIN ADJUSTABLE HOSE BURST VALVE.....110
VALVE FOR DRILL.....111
REGENERATIVE VALVE.....112
MANUAL EMERGENCY VALVE.....113
DUAL CROSS RELIEF VALVE WITH ANTI-CAVITATION AND SINGLE ADJUSTMENT.....114
3 PORT FLOW CONTROL VALVE EXCESS TO TANK FLANGEABLE ON DANFOSS MOTORS OMS.....115
BRAKE UNCLAMPING VALVE, FLANGEABLE TO DANFOSS MOTORS OMP/OMR.....116
BRAKE UNCLAMPING VALVE, FLANGEABLE TO DANFOSS MOTORS OMS.....117
DUAL CROSS RELIEF VALVE FLANGEABLE ON DANFOSS MOTORS OMP/OMR BY SCREWS.....118
MECHANICAL DRIVE END STROKE VALVE, NORMALLY CLOSED 119
GAUGE ISOLATOR — IN LINE AND 90° type.....120
MECHANICAL DRIVE END STROKE VALVE, NORMALLY CLOSED 121

FLOWFIT®

FLOWFIT® SINGLE OVERCENTRE VALVE FOR CLOSED CENTRE, TYPE A

CARATTERISTICHE/*RATINGS*

CODICE CODE	SIGLA TYPE	RAPP. PILOT. PILOT RATIO	PORTATA MAX MAX FLOW Lt./min	PRESSIONE MAX MAX PRESSURE Bar	PRICE
V0391	VBCD 3/8" SE-A CC	1 : 4,5	40	350	£98.83
V0393	VBCD 1/2" SE-A CC	1 : 4,5	60	350	£102.40

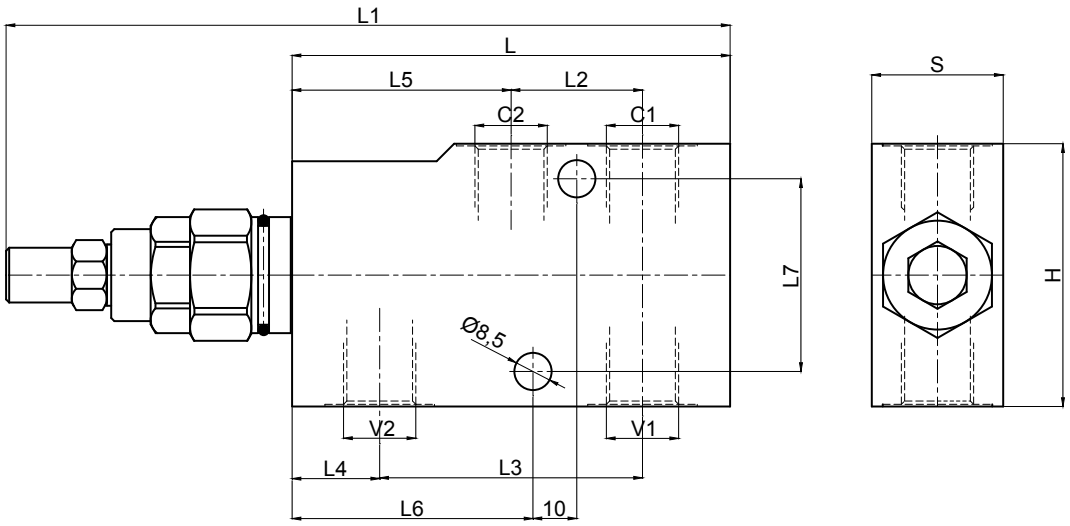

DIMENSIONI/*DIMENSIONS*

CODICE CODE	SIGLA TYPE	V1-V2 C1-C2 GAS	L mm	L1 mm	L2 mm	L3 mm	L4 mm	L5 mm	L6 mm	H mm	S mm
V0391	VBCD 3/8" SE-A CC	G 3/8"	100	166	30	60	20	50	55	60	30
V0393	VBCD 1/2" SE-A CC	G 1/2"	100	166	36	65	20	50	57,5	60	30

IMPIEGO:
Valvola utilizzata per controllare il movimento e il blocco dell'attuatore in una sola direzione realizzando la discesa controllata del carico che non sfugge trascinato dal proprio peso, in quanto la valvola non consente alcuna cavitazione dell'attuatore. È insensibile alle contropressioni e trova quindi impiego dove si richiede il controllo del carico. Permette inoltre di lavorare in serie con più movimenti.

MATERIALI E CARATTERISTICHE:
Corpo: acciaio zincato
Componenti interni: acciaio temprato termicamente e rettificato
Guarnizioni: BUNA N standard
Tenuta: trafilamento trascurabile
Taratura standard: 320 Bar
La taratura della valvola deve essere almeno 1,3 volte superiore alla pressione indotta dal carico per consentire alla valvola di chiudersi anche quando sottoposta alla pressione corrispondente al carico massimo.

MONTAGGIO:
Collegare V1 e V2 all'alimentazione, C1 al lato dell'attuatore di flusso libero e C2 al lato dell'attuatore dove si desidera la tenuta. Il montaggio è in linea.

A RICHIESTA:
- Pressione di taratura diversa da quella standard

USE AND OPERATION:
These valves are used to control actuator's movements and block in one direction in order to have a under control descent of a load; load's weight doesn't carry it away, as the valve prevents any cavitations of the actuator. These valves are ideal when normal overcentre valves doesn't work properly as it's not sensitive to back pressure. They allow to work in series with more movements also.

MATERIALS AND FEATURES:
Body: *zinc-plated steel*
Internal parts: *hardened and ground steel*
Seals: *BUNA N standard*
Tightness: *minor leakage*
Standard setting: 320 Bar
Valve setting must be at least 1,3 times more than load pressure in order to enable the valve to close even when undergone to maximum load pressure.

APPLICATIONS:
Connect V1 and V2 to the pressure flow, C1 to the free flow side of the actuator and C2 to the actuator's side you want the flow to be blocked. In-line mounting.

ON REQUEST:
- *other settings available*

SCHEMA IDRAULICO/*HYDRAULIC DIAGRAM*

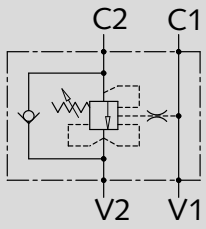

DIAGRAMMA PERDITE DI CARICO - PRESSURE DROPS CURVE
VBCD 3/8" - 1/2" SE-A CC

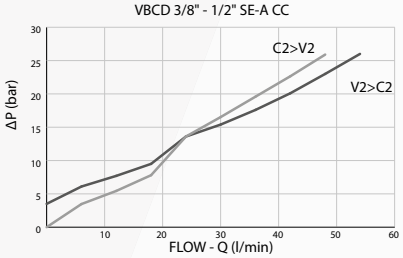

Temperatura olio: 50° - Viscosità olio: 30cSt
Oil temperature: 50° - Oil viscosity: 30cSt

DOUBLE OVERCENTRE VALVE FLANGEABLE, CLOSED CENTRE

FLOWFIT®

CARATTERISTICHE/*RATINGS*

CODICE CODE	SIGLA TYPE	RAPP. PILOT. PILOT RATIO	PORTATA MAX MAX FLOW Lt./min	PRESSIONE MAX MAX PRESSURE Bar	PRICE
V0421	VBCD 3/8" DE-A CC	1 : 4,5	40	350	£167.40
V0423	VBCD 1/2" DE-A CC	1 : 4,5	60	350	£174.52

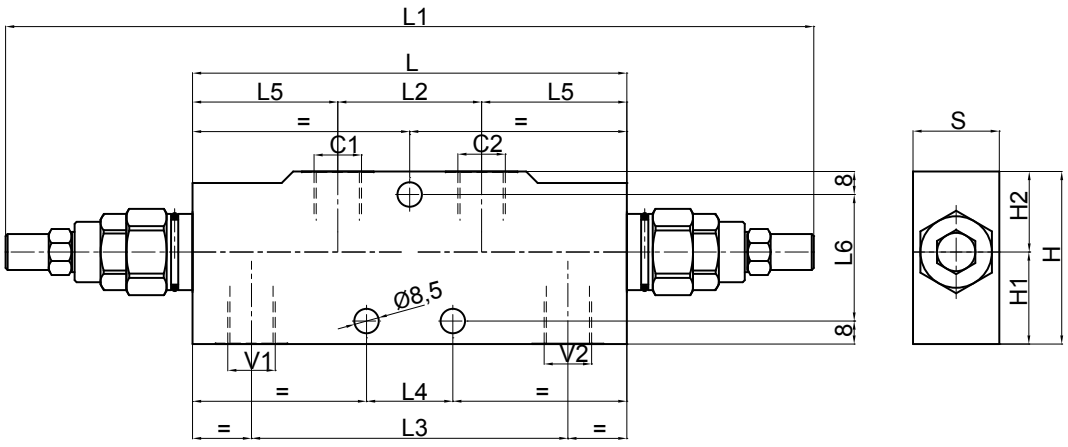

DIMENSIONI/*DIMENSIONS*

CODICE CODE	SIGLA TYPE	V1-V2 C1-C2 GAS	L mm	L1 mm	L2 mm	L3 mm	L4 mm	L5 mm	L6 mm	H mm	H1 mm	H2 mm	S mm
V0421	VBCD 3/8" DE-A CC	G 3/8"	150	282	50	110	30	50	44	60	32	28	30
V0423	VBCD 1/2" DE-A CC	G 1/2"	150	282	50	110	30	50	44	60	32	28	30

SCHEMA IDRAULICO/*HYDRAULIC DIAGRAM*

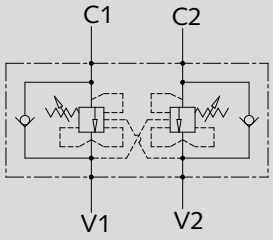

DIAGRAMMA PERDITE DI CARICO - PRESSURE DROPS CURVE

VBCD 3/8" - 1/2" DE-A CC

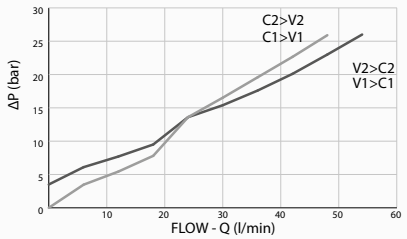

Temperatura olio: 50° - Viscosità olio: 30cSt
Oil temperature: 50° - Oil viscosity: 30cSt

IMPIEGO:

Valvola utilizzata per controllare il movimento e il blocco dell'attuatore in entrambe le direzioni realizzando la discesa controllata del carico che non sfugge trascinato dal proprio peso, in quanto la valvola non consente alcuna cavitazione dell'attuatore. È insensibile alle contropressioni e trova quindi impiego dove si richiede il controllo del carico. Permette inoltre di lavorare in serie con più movimenti.

MATERIALI E CARATTERISTICHE:

Corpo: acciaio zincato
Componenti interni: acciaio temprato termicamente e rettificato
Guarnizioni: BUNA N standard
Tenuta: trafilamento trascurabile
Taratura standard: 320 Bar
La taratura della valvola deve essere almeno 1,3 volte superiore alla pressione indotta dal carico per consentire alla valvola di chiudersi anche quando sottoposta alla pressione corrispondente al carico massimo.

MONTAGGIO:

Collegare V1 e V2 all'alimentazione e C1 e C2 all'attuatore da controllare.

A RICHIESTA:

- Pressione di taratura diversa da quella standard

USE AND OPERATION:

These valves are used to control actuator's movements and block in both directions in order to have a under control descent of a load; load's weight doesn't carry it away, as the valve prevents any cavitations of the actuator. These valves are ideal when normal overcentre valves doesn't work properly as it's not sensitive to back pressure. They allow to work in series with more movements also.

MATERIALS AND FEATURES:

Body: *zinc-plated steel*
Internal parts: *hardened and ground steel*
Seals: *BUNA N standard*
Tightness: *minor leakage*
Standard setting: 320 Bar
Valve setting must be at least 1,3 times more than load pressure in order to enable the valve to close even when undergone to maximum load pressure.

APPLICATIONS:

Connect V1 and V2 to the pressure flow, C1 and C2 to the actuator to be controlled.

ON REQUEST:

- *other settings available*

FLOWFIT® SINGLE OVERCENTRE VALVE FLANGEABLE, CLOSED CENTRE

CARATTERISTICHE/*RATINGS*

CODICE CODE	SIGLA TYPE	RAPP. PILOT. PILOT RATIO	PORTATA MAX MAX FLOW Lt./min	PRESSIONE MAX MAX PRESSURE Bar	PRICE
V0403	VBCD 3/8" SE FL CC	1 : 4,5	40	350	£108.08
V0404	VBCD 1/2" SE FL CC	1 : 4,5	60	350	£112.19

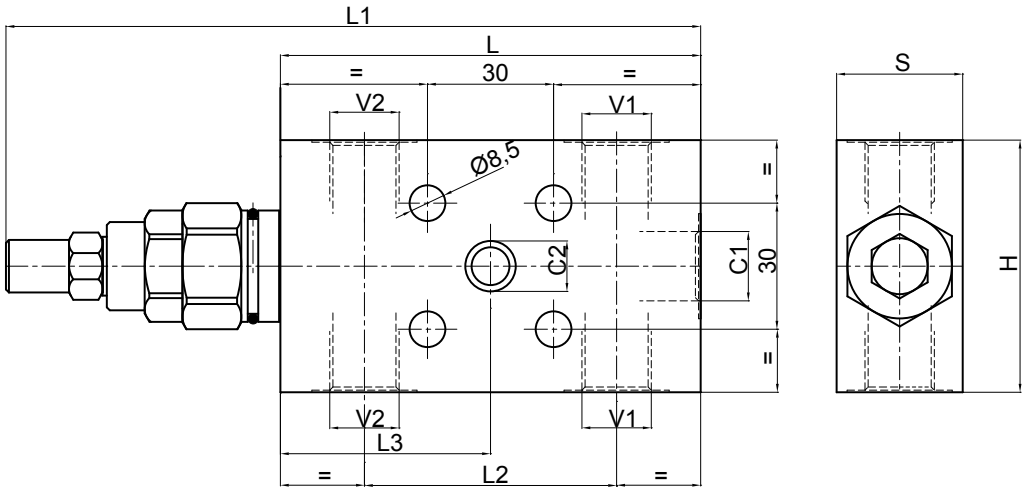

DIMENSIONI/*DIMENSIONS*

CODICE CODE	SIGLA TYPE	V1-V2 C1-C2 GAS	ØC2 mm	L mm	L1 mm	L2 mm	L3 mm	H mm	S mm
V0403	VBCD 3/8" SE FL CC	3/8"	9	100	166	60	50	60	30
V0404	VBCD 1/2" SE FL CC	1/2"	9	100	166	60	50	60	30

IMPIEGO:
Valvola utilizzata per controllare il movimento e il blocco dell'attuatore in una sola direzione realizzando la discesa controllata del carico che non sfugge trascinato dal proprio peso, in quanto la valvola non consente alcuna cavitazione dell'attuatore.
È insensibile alle contropressioni e trova quindi impiego dove si richiede il controllo del carico. Permette inoltre di lavorare in serie con più movimenti.
Gli attacchi a flangia consentono il montaggio diretto della valvola sull'attuatore.

MATERIALI E CARATTERISTICHE:
Corpo: acciaio zincato
Componenti interni: acciaio temprato termicamente e rettificato
Guarnizioni: BUNA N standard
Tenuta: trafilamento trascurabile
Taratura standard: 320 Bar
La taratura della valvola deve essere almeno 1,3 volte superiore alla pressione indotta dal carico per consentire alla valvola di chiudersi anche quando sottoposta alla pressione corrispondente al carico massimo.

MONTAGGIO:
Collegare V1 e V2 all'alimentazione, C1 al lato dell'attuatore con flusso libero e flangiare C2 al lato dell'attuatore dove si desidera la tenuta. Gli attacchi V1 e V2 sono reversibili.

A RICHIESTA:
- Pressione di taratura diversa da quella standard

USE AND OPERATION:
These valves are used to control actuator's movements and block in one direction in order to have a under control descent of a load; load's weight doesn't carry it away, as the valve prevents any cavitations of the actuator. These valves are ideal when normal overcentre valves doesn't work properly as it's not sensitive to back pressure. They allow to work in series with more movements also. Flange ports enable direct mounting of the valve to the actuator.

MATERIALS AND FEATURES:
Body: *zinc-plated steel*
Internal parts: *hardened and ground steel*
Seals: *BUNA N standard*
Tightness: *minor leakage*
Standard setting: 320 Bar
Valve setting must be at least 1,3 times more than load pressure in order to enable the valve to close even when undergone to maximum load pressure.

APPLICATIONS:
Connect V1 and V2 to the pressure flow, C1 to the free flow side of the actuator and flange C2 to the actuator's side you want the flow to be blocked. V1 and V2 ports are reversible.

ON REQUEST:
- *other settings available*

SCHEMA IDRAULICO/*HYDRAULIC DIAGRAM*

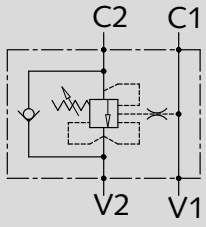

DIAGRAMMA PERDITE DI CARICO - PRESSURE DROPS CURVE
VBCD 3/8" - 1/2" SE FL CC

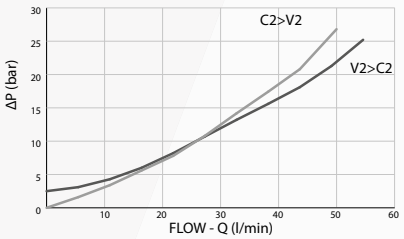

Temperatura olio: 50° - Viscosità olio: 30cSt
Oil temperature: 50° - Oil viscosity: 30cSt

DOUBLE OVERCENTRE VALVE FLANGEABLE, CLOSED CENTRE

FLOWFIT®

CARATTERISTICHE/*RATINGS*

CODICE CODE	SIGLA TYPE	RAPP. PILOT. PILOT RATIO	PORTATA MAX MAX FLOW Lt./min	PRESSIONE MAX MAX PRESSURE Bar	PRICE
V0433	VBCD 3/8" DE FL CC	1 : 4,5	40	350	£179.86
V0437	VBCD 1/2" DE FL CC	1 : 4,5	60	350	£185.20

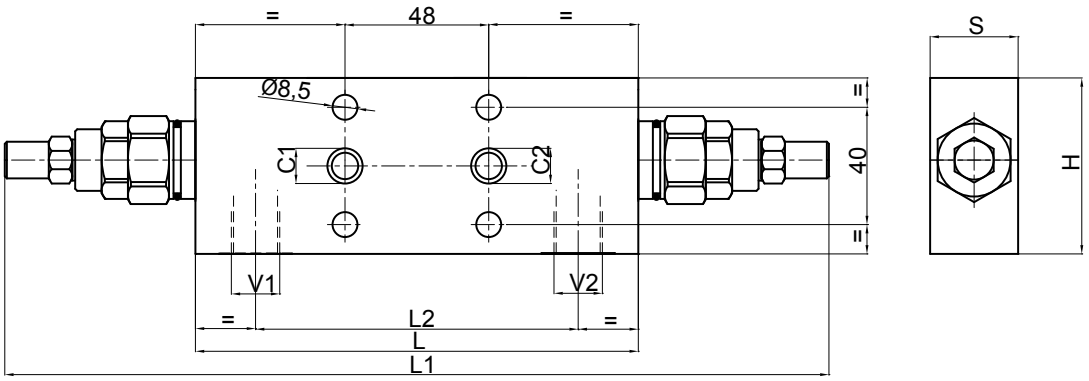

DIMENSIONI/*DIMENSIONS*

CODICE CODE	SIGLA TYPE	V1-V2 C1-C2 GAS	ØC2 mm	L mm	L1 mm	L2 mm	H mm	S mm
V0433	VBCD 3/8" DE FL CC	3/8"	9	150	282	110	60	30
V0437	VBCD 1/2" DE FL CC	1/2"	9	150	282	110	60	30

SCHEMA IDRAULICO/*HYDRAULIC DIAGRAM*

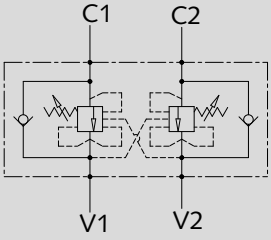

DIAGRAMMA PERDITE DI CARICO - PRESSURE DROPS CURVE

VBCD 3/8" - 1/2" DE FL CC

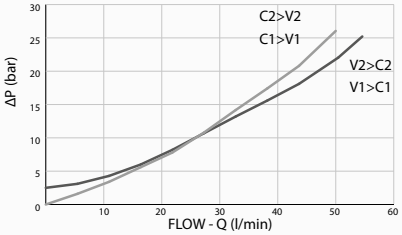

Temperatura olio: 50° - Viscosità olio: 30cSt
Oil temperature: 50° - Oil viscosity: 30cSt

IMPIEGO:

Valvola utilizzata per controllare il movimento e il blocco dell'attuatore in entrambe le direzioni realizzando la discesa controllata del carico che non sfugge trascinato dal proprio peso, in quanto la valvola non consente alcuna cavitazione dell'attuatore. È insensibile alle contropressioni e trova quindi impiego dove si richiede il controllo del carico. Permette inoltre di lavorare in serie con più movimenti. Gli attacchi a flangia consentono il montaggio diretto della valvola sull'attuatore.

MATERIALI E CARATTERISTICHE:

Corpo: acciaio zincato
Componenti interni: acciaio temprato termicamente e rettificato
Guarnizioni: BUNA N standard
Tenuta: trafilamento trascurabile
Taratura standard: 320 Bar
La taratura della valvola deve essere almeno 1,3 volte superiore alla pressione indotta dal carico per consentire alla valvola di chiudersi anche quando sottoposta alla pressione corrispondente al carico massimo.

MONTAGGIO:

Collegare V1 e V2 all'alimentazione e flangiare C1 e C2 direttamente sull'attuatore.

A RICHIESTA:

- Pressione di taratura diversa da quella standard

USE AND OPERATION:

These valves are used to control actuator's movements and block in both directions in order to have a under control descent of a load; load's weight doesn't carry it away, as the valve prevents any cavitations of the actuator. These valves are ideal when normal overcentre valves doesn't work properly as it's not sensitive to back pressure. They allow to work in series with more movements also. Flange ports enable direct mounting of the valve to the actuator.

MATERIALS AND FEATURES:

Body: *zinc-plated steel*
Internal parts: *hardened and ground steel*
Seals: *BUNA N standard*
Tightness: *minor leakage*
Standard setting: 320 Bar
Valve setting must be at least 1,3 times more than load pressure in order to enable the valve to close even when undergone to maximum load pressure.

APPLICATIONS:

Connect V1 and V2 to the pressure flow, C1 and C2 to the actuator to be controlled.

ON REQUEST:

- *other settings available*

FLOWFIT®

20 RELIEF VALVE CARTRIDGE

CARATTERISTICHE/*RATINGS*

CODICE CODE	SIGLA TYPE	PORTATA MAX MAX FLOW Lt./min	RANGE PRESS. PRESSURE RANGE Bar	PRICE
VC0200/350	VMPC 20 50-350 BAR	20	50-350	£28.49

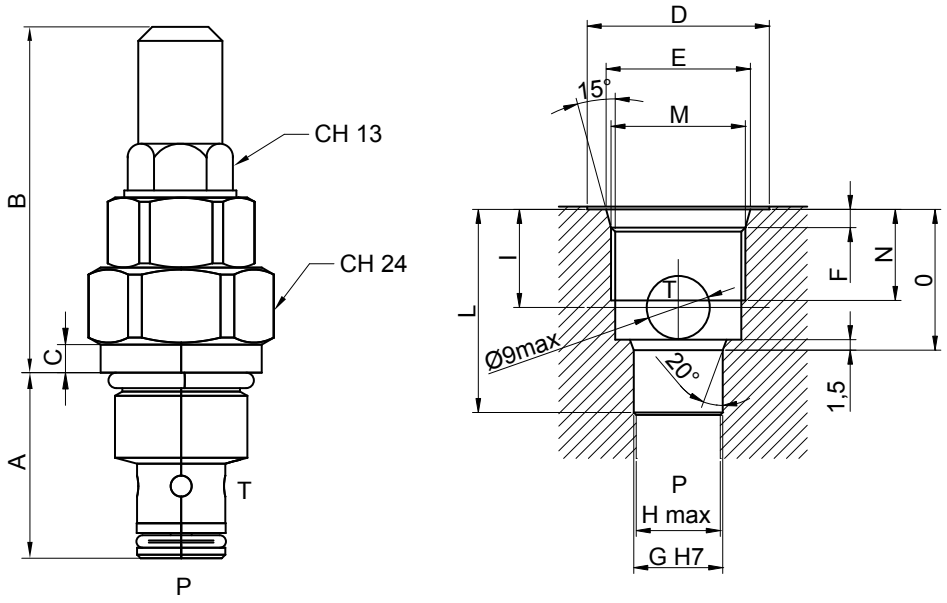

DIMENSIONI/*DIMENSIONS*

CODICE CODE	SIGLA TYPE	M SAE	A mm	B mm	C mm	Ø D mm	Ø E mm	F mm	Ø G mm	Ø H mm	I mm	L mm	N mm	O mm
VC0200/350	VMPC 20 50-350 BAR	3/4"-16	25,4	49,5	4	26	20,6	2,6	12,7	12	14	29	13	20,5

IMPIEGO:
Valvola utilizzata per limitare la pressione di un circuito idraulico ad un determinato valore di taratura. Al raggiungimento di tale valore la valvola si apre e scarica la pressione in modo che questa non salga oltre il valore di taratura.

MATERIALI E CARATTERISTICHE:
Corpo: acciaio zincato
Componenti interni: acciaio temprato termicamente e rettificato
Guarnizioni: BUNA N standard
Tenuta: a cono guidato.
Trafilamento trascurabile

MONTAGGIO:
Inserire ed avvitare la cartuccia nell'apposita cavità.

USE AND OPERATION:
The relief valve provides overload protection in a fast and accurate way: when it reaches pressure setting, the valve open allowing pressure relief in order not to exceed this setting.

MATERIALS AND FEATURES:
Body: *zinc-plated steel*
Internal parts: *hardened and ground steel*
Seals: *BUNA N standard*
Poppet type: *minor leakage*

APPLICATIONS:
Fit the valve in the cavity.

SCHEMA IDRAULICO/*HYDRAULIC DIAGRAM*

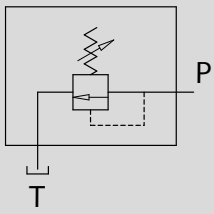

REGOLAZIONE - ADJUSTMENT	
CODICE/V CODE/V	Volantino Handknob
CODICE/PP CODE/PP	Predisposizione alla piombatura Arranged for sealing cap
CODICE/P CODE/P	Piombatura Sealing cap

35 RELIEF VALVE CARTRIDGE

FLOWFIT®

CARATTERISTICHE/*RATINGS*

CODICE CODE	SIGLA TYPE	PORTATA MAX MAX FLOW Lt./min	RANGE PRESS. PRESSURE RANGE Bar	PRICE
VC0350/120	VMPC 35 10-120 BAR	35	10-120	£24.93
VC0350/300	VMPC 35 50-300 BAR	35	50-300	£24.93

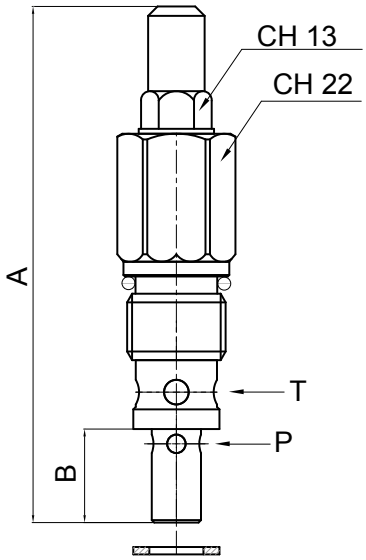

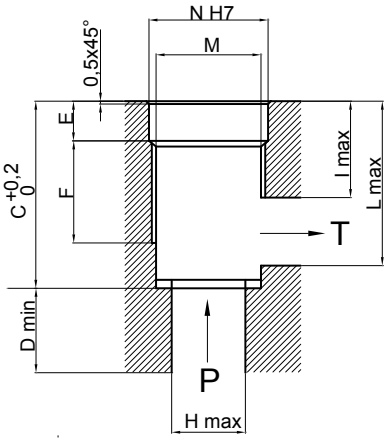

DIMENSIONI/*DIMENSIONS*

CODICE CODE	SIGLA TYPE	M SAE	A mm	B mm	C mm	D mm	E mm	F mm	Ø H mm	I mm	L mm	Ø N mm
VC0350/120	VMPC 35 10-120 BAR	M20X1,5	104	19	33	21	7	17	13	18	29	21
VC0350/300	VMPC 35 50-300 BAR	M20X1,5	104	19	33	21	7	17	13	18	29	21

SCHEMA IDRAULICO/*HYDRAULIC DIAGRAM*

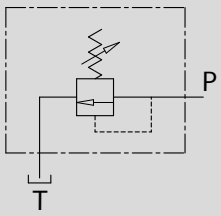

REGOLAZIONE - ADJUSTMENT	
CODICE/V CODE/V	Volantino Handknob
CODICE/PP CODE/PP	Predisposizione alla piombatura Arranged for sealing cap
CODICE/P CODE/P	Piombatura Sealing cap

IMPIEGO:
Valvola utilizzata per limitare la pressione di un circuito idraulico ad un determinato valore di taratura. Al raggiungimento di tale valore la valvola si apre e scarica la pressione in modo che questa non salga oltre il valore di taratura.

MATERIALI E CARATTERISTICHE:
Corpo: acciaio zincato
Componenti interni: acciaio temprato termicamente e rettificato
Guarnizioni: BUNA N standard
Tenuta: a cono guidato.
Trafilamento trascurabile

MONTAGGIO:
Inserire ed avvitare la cartuccia nell'apposita cavità.

USE AND OPERATION:
The relief valve provides overload protection in a fast and accurate way: when it reaches pressure setting, the valve open allowing pressure relief in order not to exceed this setting.

MATERIALS AND FEATURES:
Body: *zinc-plated steel*
Internal parts: *hardened and ground steel*
Seals: *BUNA N standard*
Poppet type: *minor leakage*

APPLICATIONS:
Fit the valve in the cavity.

FLOWFIT®

80 RELIEF VALVE CARTRIDGE

CARATTERISTICHE/*RATINGS*

CODICE CODE	SIGLA TYPE	PORTATA MAX MAX FLOW Lt./min	RANGE PRESS. PRESSURE RANGE Bar	PRICE
VC0800/120	VMPC 80 10-120 BAR	80	10-120	**£35.28**
VC0800/300	VMPC 80 50-300 BAR	80	50-300	**£35.38**

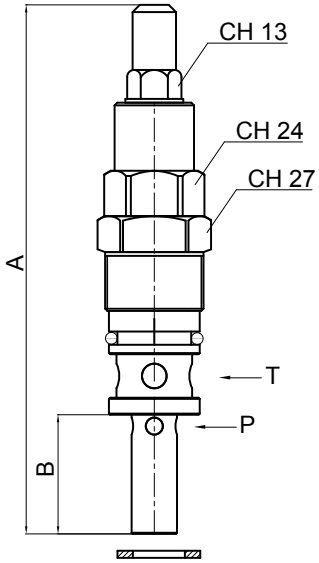

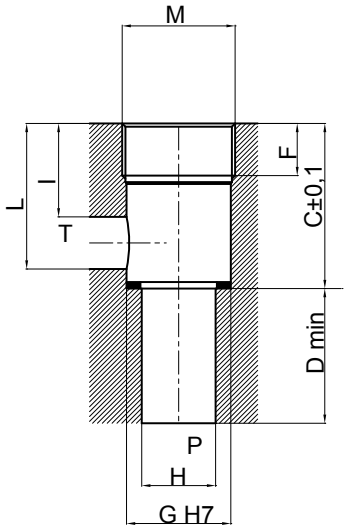

DIMENSIONI/*DIMENSIONS*

CODICE CODE	SIGLA TYPE	M SAE	A mm	B mm	C mm	D mm	F mm	Ø G mm	Ø H mm	I mm	L mm
VC0800/120	VMPC 80 10-120 BAR	M26X1,5	146	31,5	38	31	12	24	17	21,5	33,5
VC0800/300	VMPC 80 50-300 BAR	M26X1,5	146	31,5	38	31	12	24	17	21,5	33,5

IMPIEGO:
Valvola utilizzata per limitare la pressione di un circuito idraulico ad un determinato valore di taratura. Al raggiungimento di tale valore la valvola si apre e scarica la pressione in modo che questa non salga oltre il valore di taratura.

MATERIALI E CARATTERISTICHE:
Corpo: acciaio zincato
Componenti interni: acciaio temprato termicamente e rettificato
Guarnizioni: BUNA N standard
Tenuta: a cono guidato.
Trafilamento trascurabile

MONTAGGIO:
Inserire ed avvitare la cartuccia nell'apposita cavità.

USE AND OPERATION:
The relief valve provides overload protection in a fast and accurate way: when it reaches pressure setting, the valve open allowing pressure relief in order not to exceed this setting.

MATERIALS AND FEATURES:
Body: *zinc-plated steel*
Internal parts: *hardened and ground steel*
Seals: *BUNA N standard*
Poppet type: *minor leakage*

APPLICATIONS:
Fit the valve in the cavity.

SCHEMA IDRAULICO/*HYDRAULIC DIAGRAM*

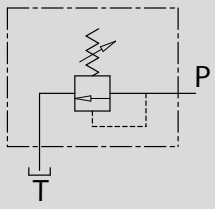

REGOLAZIONE - ADJUSTMENT	
CODICE/V CODE/V	Volantino Handknob
CODICE/PP CODE/PP	Predisposizione alla piombatura Arranged for sealing cap
CODICE/P CODE/P	Piombatura Sealing cap

50% OFF ALL PRICES

120 RELIEF VALVE CARTRIDGE

FLOWFIT®

CARATTERISTICHE/*RATINGS*

CODICE CODE	SIGLA TYPE	PORTATA MAX MAX FLOW Lt./min	RANGE PRESS. PRESSURE RANGE Bar	PRICE
VC1200/120	VMPC 120 20-200 BAR	120	20-200	£65.89
VC1200/400	VMPC 120 50-400 BAR	120	50-400	£65.89

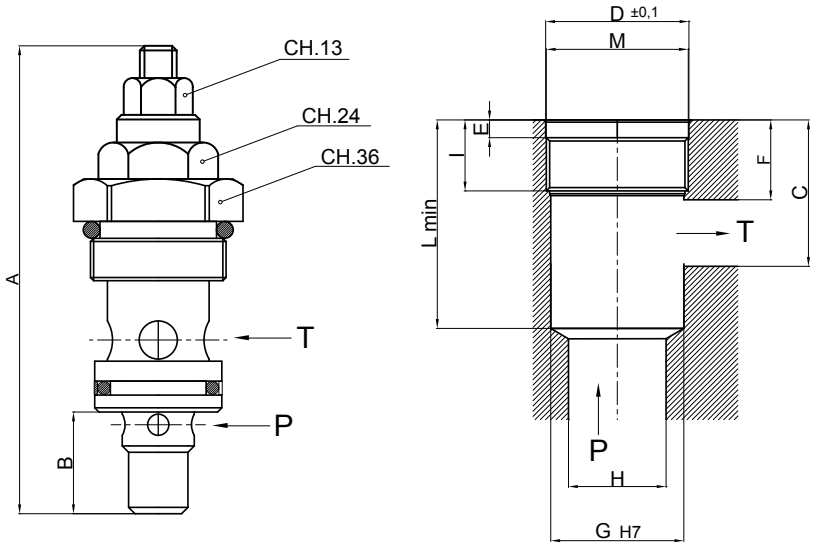

DIMENSIONI/*DIMENSIONS*

CODICE CODE	SIGLA TYPE	M SAE	A mm	B mm	C mm	D mm	E mm	F mm	Ø G mm	Ø H mm	I mm	L mm
VC1200/120	VMPC 120 20-200 BAR	M32X1,5	110	24	33	32,3	4	18	30	22	16	46
VC1200/400	VMPC 120 50-400 BAR	M32X1,5	110	24	33	32,3	4	18	30	22	16	46

SCHEMA IDRAULICO/*HYDRAULIC DIAGRAM*

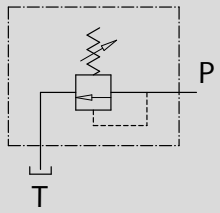

REGOLAZIONE - ADJUSTMENT	
CODICE/V CODE/V	Volantino Handknob
CODICE/PP CODE/PP	Predisposizione alla piombatura Arranged for sealing cap
CODICE/P CODE/P	Piombatura Sealing cap

IMPIEGO:
Valvola utilizzata per limitare la pressione di un circuito idraulico ad un determinato valore di taratura. Al raggiungimento di tale valore la valvola si apre e scarica la pressione in modo che questa non salga oltre il valore di taratura.

MATERIALI E CARATTERISTICHE:
Corpo: acciaio zincato
Componenti interni: acciaio temprato termicamente e rettificato
Guarnizioni: BUNA N standard
Tenuta: a cono guidato.
Trafilamento trascurabile

MONTAGGIO:
Inserire ed avvitare la cartuccia nell'apposita cavità.

USE AND OPERATION:
The relief valve provides overload protection in a fast and accurate way: when it reaches pressure setting, the valve open allowing pressure relief in order not to exceed this setting.

MATERIALS AND FEATURES:
Body: *zinc-plated steel*
Internal parts: *hardened and ground steel*
Seals: *BUNA N standard*
Poppet type: *minor leakage*

APPLICATIONS:
Fit the valve in the cavity.

FLOWFIT®

IN LINE MOUNTING RELIEF VALVE

CARATTERISTICHE/*RATINGS*

CODICE CODE	SIGLA TYPE	PORTATA MAX MAX FLOW Lt./min	PRICE
V0688/000*	VMP/L/D5 1/4"	30	**£34.90**

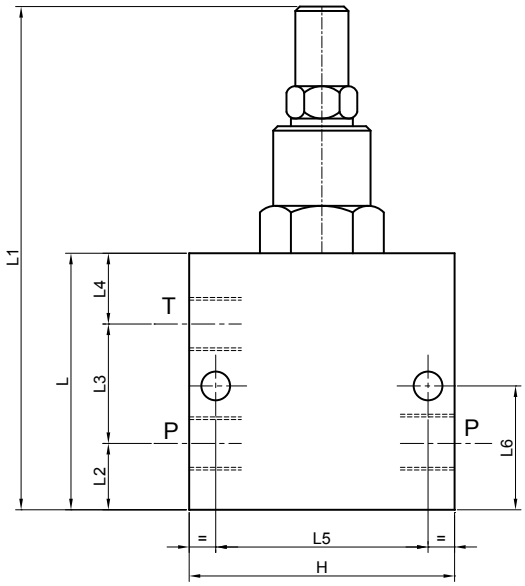

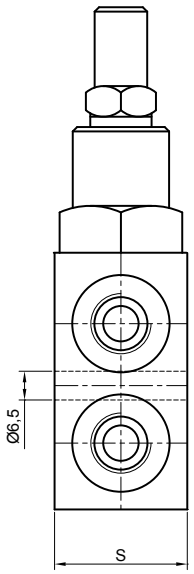

DIMENSIONI/*DIMENSIONS*

CODICE CODE	SIGLA TYPE	P - T GAS	L mm	L1 mm	L2 mm	L3 mm	L4 mm	L5 mm	L6 mm	H mm	S mm
V0688/000*	VMP/L/D5 1/4"	G 1/4"	58	112	15	27	16	48	28	60	30

*000 = specificare valore della molla desiderata. Vedi tabella sotto.

**000 = please specify the desired setting range. See the table below.*

IMPIEGO:
Valvola utilizzata per limitare la pressione di un circuito idraulico ad un determinato valore di taratura. Al raggiungimento di tale valore la valvola si apre e scarica la pressione in modo che questa non salga oltre il valore di taratura.

MATERIALI E CARATTERISTICHE:
Corpo: acciaio zincato
Componenti interni: acciaio temprato termicamente e rettificato
Guarnizioni: BUNA N standard
Tenuta: a cono guidato.
Trafilamento trascurabile

MONTAGGIO:
Collegare il ramo del circuito in pressione a P e il ramo di scarico a T. L'attacco P è reversibile.

A RICHIESTA:
- molle per diversi campi di taratura (tabella)
- pressione di taratura diversa da quella standard (CODICE/T000 specificando il valore di taratura)

USE AND OPERATION:
The relief valve provides overload protection in a fast and accurate way: when it reaches pressure setting, the valve open allowing pressure relief in order not to exceed this setting.

MATERIALS AND FEATURES:
Body: *zinc-plated steel*
Internal parts: *hardened and ground steel*
Seals: *BUNA N standard*
Poppet type: *minor leakage*

APPLICATIONS:
Connect circuit port with pressure to P and tank port to T. Port P is reversible.

ON REQUEST:
- *different setting range (see the table)*
- *other setting available (CODE/T000: please specify the desired setting)*

SCHEMA IDRAULICO/*HYDRAULIC DIAGRAM*

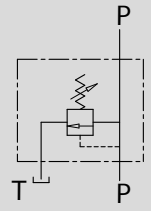

REGOLAZIONE - ADJUSTMENT	
CODICE/V CODE/V	Volantino Handknob
CODICE/PP CODE/PP	Predisposizione alla piombatura Arranged for sealing cap
CODICE/P CODE/P	Piombatura Sealing cap

*Per tarature inferiori a 70 Bar: Q = 12 l/min
**For setting less than 70 Bar: Q = 12 l/min*

Codice	Campo di taratura Setting range (Bar)	Incremento/giro Pressure increase (Bar/turn) Q = 4 l/min	Taratura standard Standard setting (Bar)
COD/050	10 – 50*	7	30
COD/180	10 – 180 STANDARD	40	100
COD/300	80 - 300	50	150

DIAGRAMMA PRESSIONE/PORTATA - PRESSURE/FLOW DIAGRAMS

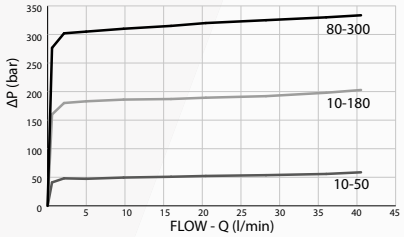

Temperatura olio: 50° - Viscosità olio: 30cSt
Oil temperature: 50° - Oil viscosity: 30cSt

50% OFF ALL PRICES

IN LINE MOUNTING RELIEF VALVE

FLOWFIT®

SCHEMA IDRAULICO
HYDRAULIC DIAGRAM

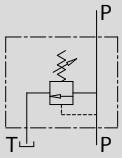

CARATTERISTICHE/*RATINGS*

CODICE CODE	SIGLA TYPE	PORTATA MAX MAX FLOW Lt./min	PRICE
V0691/000*	VMP/L/D5 3/8"	45	£46.30
V0692/000*	VMP/L/D5 1/2"	70	£51.30
V0693/000*	VMP/L/D5 3/4"	90	£68.01

REGOLAZIONE - ADJUSTMENT	
CODICE/V CODE/V	Volantino Handknob
CODICE/PP CODE/PP	Predisposizione alla piombatura Arranged for sealing cap
CODICE/P CODE/P	Piombatura Sealing cap

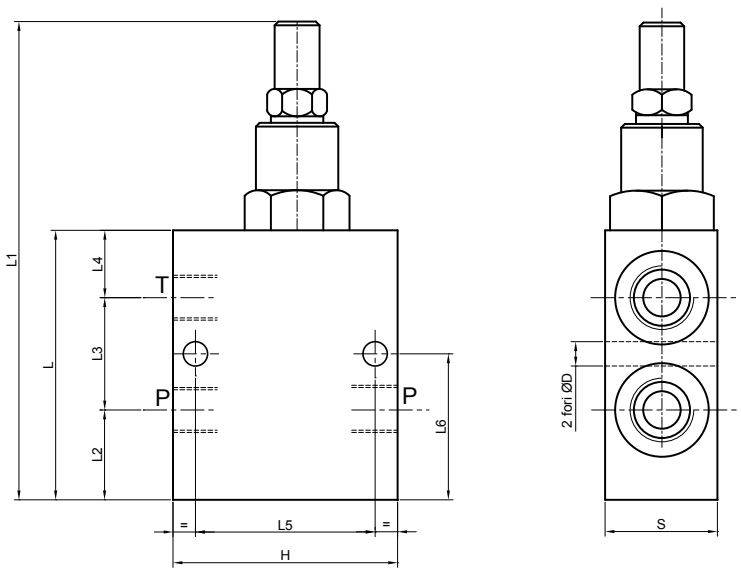

DIMENSIONI/*DIMENSIONS*

CODICE CODE	SIGLA TYPE	P - T GAS	Ø D mm	L mm	L1 mm	L2 mm	L3 mm	L4 mm	L5 mm	L6 mm	H mm	S mm
V0691/000*	VMP/L/D5 3/8"	G 3/8"	6,5	72	126	24	31	17	48	40	60	30
V0692/000*	VMP/L/D5 1/2"	G 1/2"	6,5	72	126	22	35	15	48	40	60	30
V0693/000*	VMP/L/D5 3/4"	G 3/4"	8,5	100	154	32	44	24	54	40	70	40

*000 = specificare valore della molla desiderata. Vedi tabella sotto.

**000 = please specify the desired setting range. See the table below.*

DIAGRAMMA PRESSIONE/PORTATA - PRESSURE/FLOW DIAGRAMS

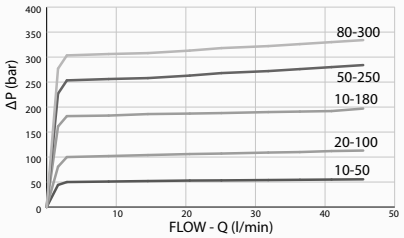

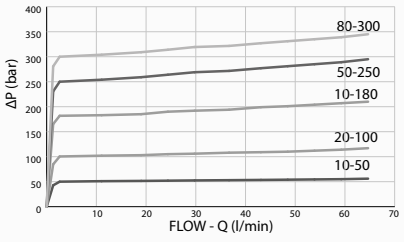

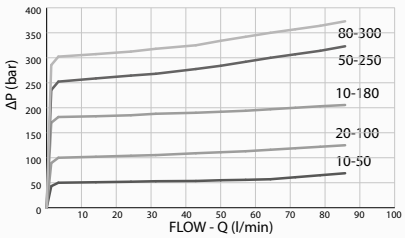

Temperatura olio: 50° - Viscosità olio: 30cSt
Oil temperature: 50° - Oil viscosity: 30cSt

IMPIEGO:

Valvola utilizzata per limitare la pressione di un circuito idraulico ad un determinato valore di taratura. Al raggiungimento di tale valore la valvola si apre e scarica la pressione in modo che questa non salga oltre il valore di taratura.

MATERIALI E CARATTERISTICHE:

Corpo: acciaio zincato
Componenti interni: acciaio temprato termicamente e rettificato
Guarnizioni: BUNA N standard
Tenuta: a cono guidato.
Trafilamento trascurabile

MONTAGGIO:

Collegare il ramo del circuito in pressione a P e il ramo di scarico a T. L'attacco P è reversibile.

A RICHIESTA:

- molle per diversi campi di taratura (tabella)
- pressione di taratura diversa da quella standard (CODICE/T000 specificando il valore di taratura)

USE AND OPERATION:

The relief valve provides overload protection in a fast and accurate way: when it reaches pressure setting, the valve open allowing pressure relief in order not to exceed this setting.

MATERIALS AND FEATURES:

***Body:** zinc-plated steel*
***Internal parts:** hardened and ground steel*
***Seals:** BUNA N standard*
***Poppet type:** minor leakage*

APPLICATIONS:

Connect circuit port with pressure to P and tank port to T. Port P is reversible.

ON REQUEST:

- *different setting range (see the table)*
- *other setting available (CODE/T000: please specify the desired setting)*

Codice	Campo di taratura Setting range (Bar)	Incremento/giro Pressure increase (Bar/turn) Q = 4 l/min	Taratura standard Standard setting (Bar)
COD/050	10 – 50*	7	30
COD/100	20 - 100	12	75
COD/180	10 – 180 STANDARD	30	90
COD/250	50 - 250	45	130
COD/300	80 - 300	50	150

FLOWFIT®

IN LINE MOUNTING RELIEF VALVE

CARATTERISTICHE/*RATINGS*

CODICE CODE	SIGLA TYPE	PORTATA MAX MAX FLOW Lt./min	PRICE
V0726/000*	VMPP/L/D5 3/4"	120	£133.56

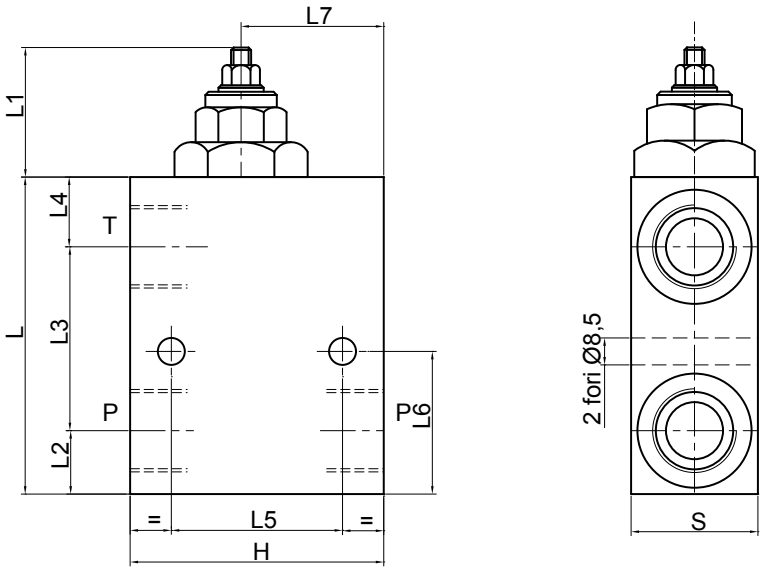

DIMENSIONI/*DIMENSIONS*

CODICE CODE	SIGLA TYPE	P - T GAS	L mm	L1 mm	L2 mm	L3 mm	L4 mm	L5 mm	L6 mm	L7 mm	H mm	S mm
V0726/000*	VMPP/L/D5 3/4"	G 3/4"	100	41	20	58	22	54	45	45	80	40

*000 = specificare valore della molla desiderata. Vedi tabella sotto.

**000 = please specify the desired setting range. See the table below.*

IMPIEGO:
Valvola utilizzata per limitare la pressione di un circuito idraulico ad un determinato valore di taratura. Al raggiungimento di tale valore la valvola si apre e scarica la pressione in modo che questa non salga oltre il valore di taratura. Questa valvola differenziata è leggermente più lenta all'apertura ma rimane più costante alla taratura al variare della portata.

MATERIALI E CARATTERISTICHE:
Corpo: acciaio zincato
Componenti interni: acciaio temprato termicamente e rettificato
Guarnizioni: BUNA N standard
Tenuta: a cono guidato. Trafilamento trascurabile

MONTAGGIO:
Collegare il ramo del circuito in pressione a P e il ramo di scarico a T. L'attacco P è reversibile.

A RICHIESTA:
- molle per diversi campi di taratura (tabella)
- pressione di taratura diversa da quella standard (CODICE/T000 specificando il valore di taratura)

USE AND OPERATION:
The relief valve provides overload protection in a fast and accurate way: when it reaches pressure setting, the valve open allowing pressure relief in order not to exceed this setting. The valve differential opening is slower than the standard one, but the setting is more stable changing the flow.

MATERIALS AND FEATURES:
Body: *zinc-plated steel*
Internal parts: *hardened and ground steel*
Seals: *BUNA N standard*
Poppet type: *minor leakage*

APPLICATIONS:
Connect circuit port with pressure to P and tank port to T. Port P is reversible.

ON REQUEST:
- *different setting range (see the table)*
- *other setting available (CODE/T000: please specify the desired setting)*

Codice	Campo di taratura Setting range (Bar)	Incremento/giro Pressure increase (Bar/turn) Q = 4 l/min	Taratura standard Standard setting (Bar)
COD/200	20 - 200	40	160
COD/400	50 – 400 STANDARD	80	180

SCHEMA IDRAULICO/*HYDRAULIC DIAGRAM*

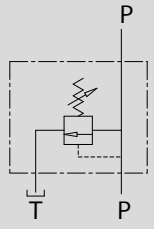

REGOLAZIONE - ADJUSTMENT	
CODICE/V CODE/V	Volantino Handknob
CODICE/PP CODE/PP	Predisposizione alla piombatura Arranged for sealing cap
CODICE/P CODE/P	Piombatura Sealing cap

DIAGRAMMA PRESSIONE/PORTATA - PRESSURE/FLOW DIAGRAMS

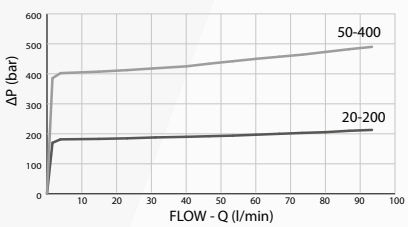

Temperatura olio: 50° - Viscosità olio: 30cSt
Oil temperature: 50° - Oil viscosity: 30cSt

50% OFF ALL PRICES

PRESSURE REDUCING VALVE, DIRECT ACTING POPPET

FLOWFIT®

CARATTERISTICHE/*RATINGS*

CODICE CODE	SIGLA TYPE	PORTATA MAX MAX FLOW Lt./min	PRESSIONE MAX MAX PRESSURE Bar	PRICE
V0704/000*	VRP 3/8"	30	350	£139.79
V0706/000*	VRP 1/2"	30	350	£141.57

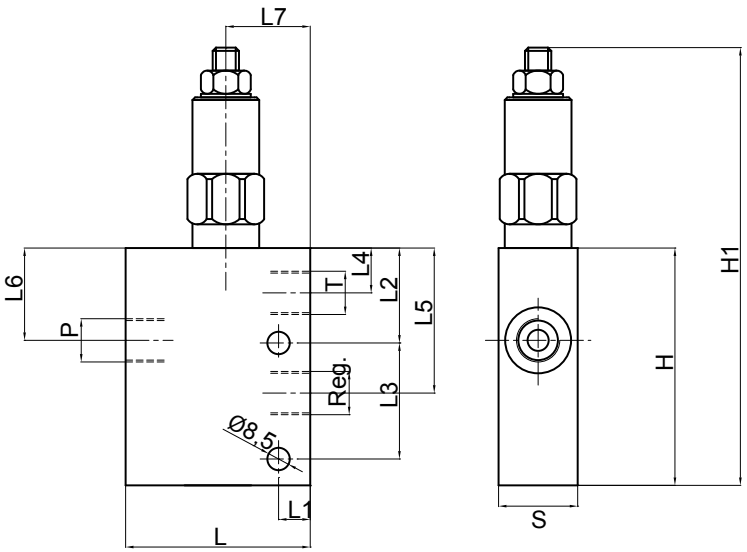

DIMENSIONI/*DIMENSIONS*

CODICE CODE	SIGLA TYPE	P - T Reg. GAS	L mm	L1 mm	L2 mm	L3 mm	L4 mm	L5 mm	L6 mm	L7 mm	H mm	H1 mm	S mm
V0704/000*	VRP 3/8"	3/8"	70	12	36	44	17	55	35	32	90	168	30
V0706/000*	VRP 1/2"	1/2"	70	12	36	44	17	55	35	32	90	168	30

*000 = specificare valore della molla desiderata. Vedi tabella sotto.

**000 = please specify the desired setting range. See the table below.*

SCHEMA IDRAULICO/*HYDRAULIC DIAGRAM*

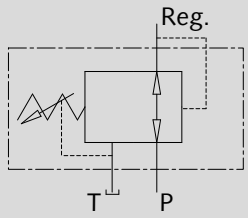

Codice	Campo di taratura Setting range (Bar)
COD/055	15 – 55
COD/165	30 – 165 STANDARD

DIAGRAMMA PRESSIONE/PORTATA - PRESSURE/FLOW DIAGRAMS

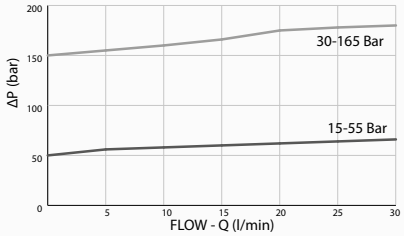

Temperatura olio: 50° - Viscosità olio: 30cSt
Oil temperature: 50° - Oil viscosity: 30cSt

IMPIEGO:
Valvola che permette di mantenere costante la pressione a valle indipendentemente dalla pressione a monte.

MATERIALI E CARATTERISTICHE:
Corpo: acciaio zincato
Componenti interni: acciaio temprato termicamente e rettificato
Guarnizioni: BUNA N standard
Trafilamento: 70 cc/min (con 350 Bar alla bocca P)

MONTAGGIO:
Collegare la bocca P al circuito principale, la bocca Reg. al circuito dove si desidera ridurre la pressione, la bocca T allo scarico.

USE AND OPERATION:
This valve allows to preserve constant the pressure downstream, regardless of the upstream pressure.

MATERIALS AND FEATURES:
Body: *zinc-plated steel*
Internal parts: *hardened and ground steel*
Seals: *BUNA N standard*
Tightness: *70 cc/min (350 Bar to port P)*

APPLICATIONS:
Connect P to the main circuit, the port Reg. to the circuit where you want to reduce pressure and port T to the tank.

REGOLAZIONE - ADJUSTMENT	
CODICE/V CODE/V	Volantino Handknob
CODICE/PP CODE/PP	Predisposizione alla piombatura Arranged for sealing cap
CODICE/P CODE/P	Piombatura Sealing cap

FLOWFIT®

DIRECT ACTING REDUCING VALVE WITH CHECK VALVE

CARATTERISTICHE/*RATINGS*

CODICE CODE	SIGLA TYPE	PORTATA MAX MAX FLOW Lt./min	PRESSIONE MAX MAX PRESSURE Bar	PRICE
V0705/000*	VRPRL 3/8"	30	350	£199.45
V0707/000*	VRPRL 1/2"	30	350	£202.12

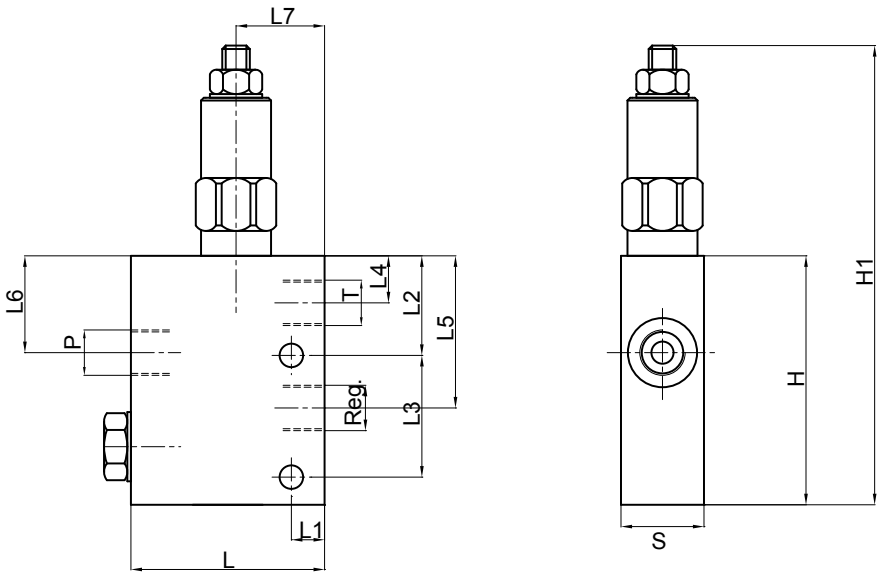

DIMENSIONI/*DIMENSIONS*

CODICE CODE	SIGLA TYPE	P - T Reg. GAS	L mm	L1 mm	L2 mm	L3 mm	L4 mm	L5 mm	L6 mm	L7 mm	H mm	H1 mm	S mm
V0705/000*	VRPRL 3/8"	3/8"	70	12	36	44	17	55	35	32	90	168	30
V0707/000*	VRPRL 1/2"	1/2"	70	12	36	44	17	55	35	32	90	168	30

*000 = specificare valore della molla desiderata. Vedi tabella sotto.

**000 = please specify the desired setting range. See the table below.*

IMPIEGO:
Valvola che permette di mantenere costante la pressione a valle indipendentemente dalla pressione a monte. La presenza della valvola di non ritorno consente il libero ritorno dell'olio.

MATERIALI E CARATTERISTICHE:
Corpo: acciaio zincato
Componenti interni: acciaio temprato termicamente e rettificato
Guarnizioni: BUNA N standard
Tenuta: 70 cc/min (con 350 Bar alla bocca P)

MONTAGGIO:
Collegare la bocca P al circuito principale, la bocca Reg. al circuito dove si desidera ridurre la pressione, la bocca T allo scarico.

USE AND OPERATION:
This valve allows to preserve constant the pressure downstream, regardless of the upstream pressure. The check valve allows the free return of the oil.

MATERIALS AND FEATURES:
Body: *zinc-plated steel.*
Internal parts: *hardened and ground steel*
Seals: *BUNA N standard*
Tightness: *70 cc/min (350 Bar to port P)*

APPLICATIONS:
Connect P to the main circuit, the port Reg. to the circuit where you want to reduce pressure and port T to the tank.

SCHEMA IDRAULICO/*HYDRAULIC DIAGRAM*

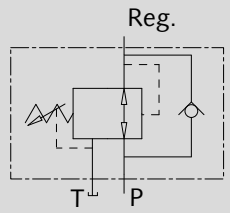

Codice	Campo di taratura Setting range (Bar)
COD/055	15 – 55
COD/165	30 – 165 STANDARD

REGOLAZIONE - ADJUSTMENT	
CODICE/V CODE/V	Volantino Handknob
CODICE/PP CODE/PP	Predisposizione alla piombatura Arranged for sealing cap
CODICE/P CODE/P	Piombatura Sealing cap

DIAGRAMMA PRESSIONE/PORTATA - PRESSURE/FLOW DIAGRAMS

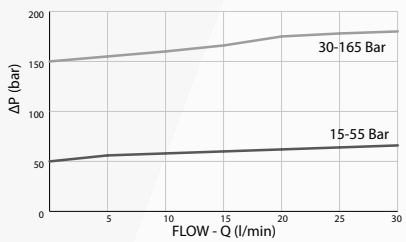

Temperatura olio: 50° - Viscosità olio: 30cSt
Oil temperature: 50° - Oil viscosity: 30cSt

50% OFF ALL PRICES

COMPACT DOUBLE PILOT OPERATED CHECK VALVE

FLOWFIT®

CARATTERISTICHE/*RATINGS*

CODICE CODE	SIGLA TYPE	RAPP. PILOT. PILOT RATIO	PORTATA MAX MAX FLOW Lt./min	PRESS. MAX MAX PRESS. Bar	PRESS. APERTURA CRACKING PRESS. Bar	PRICE
V0114	VBPDE 3/8" L CMP/FLV	1 : 4,9	20	300	0,6	£74.54

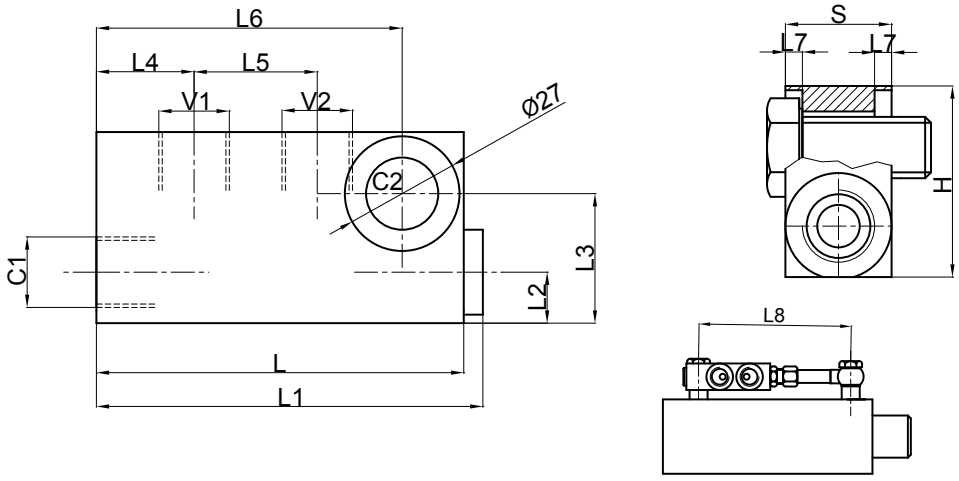

DIMENSIONI/*DIMENSIONS*

CODICE CODE	SIGLA TYPE	V1-V2 C1-C2 GAS	L mm	L1 mm	L2 mm	L3 mm	L4 mm	L5 mm	L6 mm	L7 mm	L8 mm	H mm	S mm
V0114	VBPDE 3/8" L CMP/FLV*	G 3/8"	86,5	91	12	30,5	23	29	72	4	127	45	25

* Valvola completa di vite forata e nr. 2 rondelle bonded. Controllare i diametri esterni delle borchie dei cilindri rispetto alla quota della flangiatura.
**The valve is supplied with screw and 2 bonded washers. Please check the external diameters of the cylinder center distance compared to flange.*

SCHEMA IDRAULICO/*HYDRAULIC DIAGRAM*

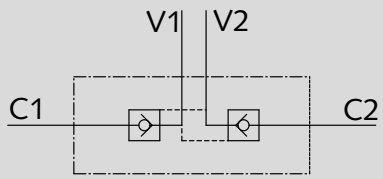

IMPIEGO:
Valvola utilizzata per bloccare in posizione un cilindro in entrambi i sensi, consentendo il flusso in una direzione ed impedendolo in senso contrario fino a quando non viene applicata la pressione di pilotaggio. Questo modello è stato studiato appositamente per cilindri con interasse molto corto ai quali è fissata tramite 1 vite cava fornita con la valvola.

MATERIALI E CARATTERISTICHE:
Corpo: acciaio zincato
Componenti interni: acciaio temprato termicamente e rettificato
Guarnizioni: BUNA N standard
Tenuta: a sfera. Non ammette trafilamenti

MONTAGGIO:
Collegare V1 e V2 all'alimentazione e C1 e C2 all'attuatore tramite l'apposita vite.

USE AND OPERATION:
Pilot check valves are used to block the actuator in both directions. Flow is free in one direction and blocked in the reverse direction until pilot pressure is applied. This valve is ideal for very short distance centre cylinders and is fixed on them by a drilled screw supplied with the valve.

MATERIALS AND FEATURES:
Body: *zinc-plated steel*
Internal parts: *hardened and ground steel*
Seals: *BUNA N standard*
Tightness: *ball type; any leakage*

APPLICATIONS:
Connect V1 and V2 to the pressure flow and C1 and C2 to the actuator by the screw.

FLOWFIT®

MALE CHECK VALVES

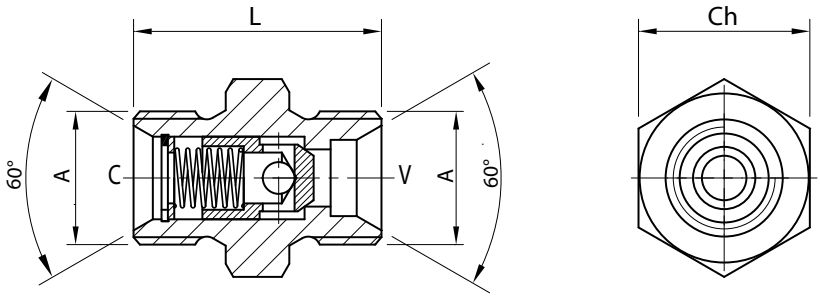

DIMENSIONI E CARATTERISTICHE/*DIMENSIONS* AND RATINGS

CODICE CODE	SIGLA TYPE	PORTATA MAX MAX FLOW Lt./min	PRESSIONE MAX MAX PRESSURE Bar	A BSPP	L mm	Ch mm	PESO WEIGHT Kg	PRICE
V0594/*	VU MM 1/4"	8	350	1/4"	32	19	0,033	£17.64
V0604/*	VU MM 3/8"	20	350	3/8"	34	22	0,053	£19.25
V0614/*	VU MM 1/2"	50	350	1/2"	39	27	0,092	£21.20
V0624/*	VU MM 3/4"	90	350	3/4"	45	32	0,142	£33.67
V0634/*	VU MM 1"	90	320	1"	55	40	0,288	£49.86
V0637/*	VU MM 1"1/4	250	320	1"1/4	70	50	0,594	£88.49
V0638/*	VU MM 1"1/2	300	320	1"1/2	86	55	0,910	£117.53
V0639/*	VU MM 2"	650	320	2"	102	70	1,800	£147.09

SCHEMA IDRAULICO/*HYDRAULIC DIAGRAM*

*Specificare il valore della molla desiderato:
pressione di apertura 1 (standard) - 3 - 6 Bar per le misuere fino a 1" e 1(standard) - 6 - 9 Bar da 1"1/4.

**Please specify the desired spring:*
cracking pressure 1(standard) -3 - 6 Bar up to 1" size and 1(standard) 6 - 9 Bar starting from 1"1/4 size.

IMPIEGO:
Valvole che consentono il flusso libero in senso e lo bloccano nel senso opposto.

MATERIALI E CARATTERISTICHE:
Corpo: acciaio zincato
Componenti interni: acciaio temprato e rettificato
Tenuta: a cono guidato. Non ammette trafilamenti

MONTAGGIO:
Collegare la bocca V all'alimentazione e la bocca C all'utilizzo. Il flusso passa libero da V a C ed è bloccato nel senso opposto.

USE AND OPERATION:
In the check valves flow is free in one direction and blocked in the reverse one.

MATERIALS AND FEATURES:
Body: *zinc-plated steel*
Internal parts: *Hardened and ground steel*
Poppet type: *any leakage*

APPLICATIONS:
Connect the port V to the pressure flow and the port C to the actuator. Flow is free from V to C and blocked in the reverse direction.

DIAGRAMMA PERDITE DI CARICO - PRESSURE DROPS CURVE

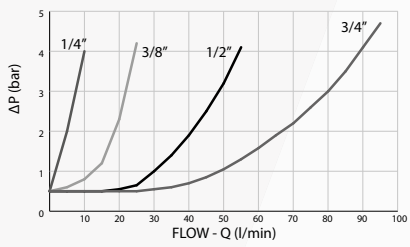

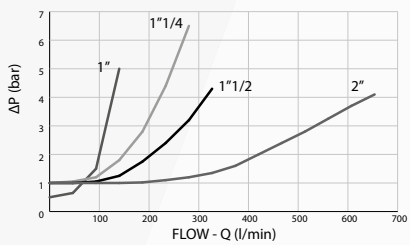

Temperatura olio: 50° - Viscosità olio: 30cSt
Oil temperature: 50° - Oil viscosity: 30cSt

BIDIRECTIONAL CHECK VALVE

FLOWFIT®

CARATTERISTICHE/*RATINGS*

CODICE CODE	SIGLA TYPE	PORTATA MAX MAX FLOW Lt./min	PRESSIONE MAX MAX PRESSURE Bar	PRESS.APERTURA CRACKING PRESSURE V - C Bar	PRESS. APERTURA CRACKING PRESSURE C - V Bar	PRICE
V0606	VRC 3/8"	35	350	0,4 / 0,7	8	£78.36
V0616	VRC 1/2"	55	350	0,4 / 0,7	8	£81.92

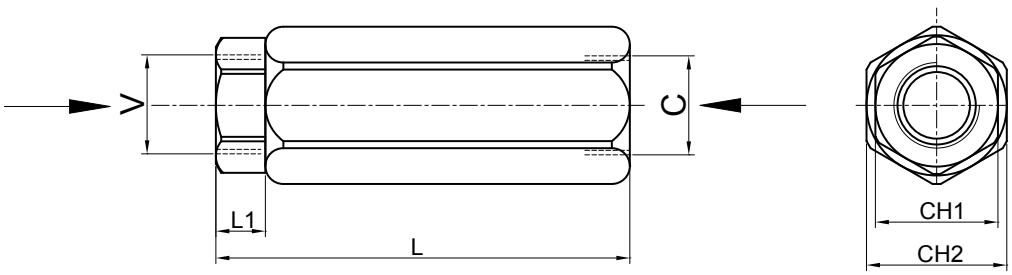

DIMENSIONI/*DIMENSIONS*

CODICE CODE	SIGLA TYPE	V - C GAS	L mm	L1 mm	CH1 mm	CH2 mm
V0606	VRC 3/8"	G 3/8"	100	11	27	30
V0616	VRC 1/2"	G 1/2"	118	26	27	30

SCHEMA IDRAULICO/*HYDRAULIC DIAGRAM*

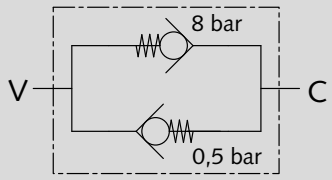

IMPIEGO:

Valvole che consentono il controllo del flusso libero in entrambe le direzioni. Sono impiegate principalmente sulle presse e consentono di tenere i cilindri fermi in caso di emergenza, dando la possibilità di movimento manuale oltre gli 8 Bar.

MATERIALI E CARATTERISTICHE:

Corpo: acciaio zincato
Componenti interni: acciaio temprato termicamente e rettificato

MONTAGGIO:

Collegare C o V all'alimentazione a seconda del tipo di regolazione del flusso che si vuole ottenere.

USE AND OPERATION:

In the bidirectional check valves flow is controlled in both directions. They are mainly used on presses holding the cylinder and allowing manual movement over 8 Bar in case of emergency.

MATERIALS AND FEATURES:

Body: *zinc plated steel*
Internal parts: *hardened and ground steel*

APPLICATIONS:

Connect V or C to the pressure flow according to the adjustment to be obtain.

DIAGRAMMA PERDITE DI CARICO - PRESSURE DROPS CURVE

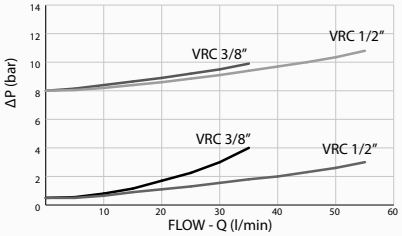

Temperatura olio: 50° - Viscosità olio: 30cSt
Oil temperature: 50° - Oil viscosity: 30cSt

FLOWFIT®

DIN ADJUSTABLE HOSE BURST VALVE

CARATTERISTICHE/*RATINGS*

CODICE CODE	SIGLA TYPE	PORTATA MAX MAX FLOW Lt./min	PRESSIONE MAX MAX PRESSURE Bar	PRICE
V0784	VUBA 3/8" DIN T10L	50	350	£12.13
V0786	VUBA 3/8" DIN T12L	50	350	£12.13
V0787	VUBA 3/8" DIN T15L	50	350	£12.13
V0794	VUBA 1/2" DIN T15L	80	350	£12.80

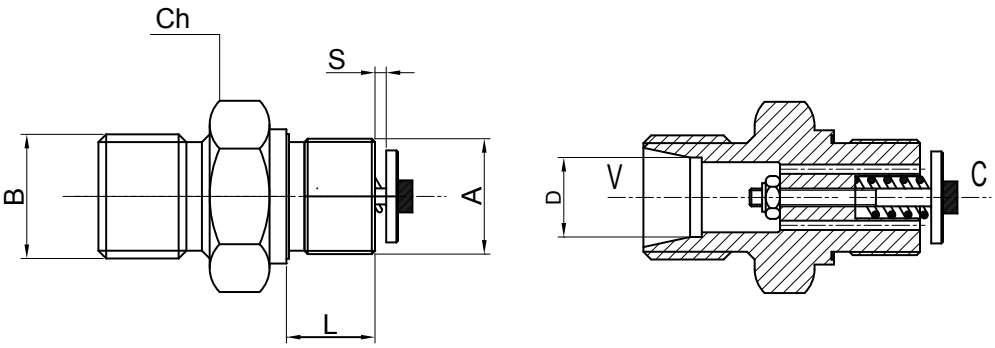

DIMENSIONI/*DIMENSIONS*

CODICE CODE	SIGLA TYPE	A BSPP	B mm	L mm	D mm	S mm	Ch mm
V0784	VUBA 3/8" DIN T10L	3/8"	M16x1,5	11	10	1,2	22
V0786	VUBA 3/8" DIN T12L	3/8"	M18x1,5	11	12	1,2	22
V0787	VUBA 3/8" DIN T15L	3/8"	M22x1,5	11	15	1,2	24
V0794	VUBA 1/2" DIN T15L	1/2"	M22x1,5	13	15	1,6	27

IMPIEGO:
Valvole utilizzate per prevenire la discesa incontrollata dell'attuatore in caso di rottura della tubazione. All'improvviso aumentare della portata (flusso di reazione) la valvola entra in funzione chiudendo il flusso.

MATERIALI E CARATTERISTICHE:
Corpo: acciaio zincato
Piattello: acciaio brunito

MONTAGGIO:
Avvitare la valvole nell'apposita cavità collegando V all'alimentazione e C all'attuatore. Se ne consiglia l'uso con una valvola di regolazione flusso.

A RICHIESTA:
- Regolazioni personalizzate (è consigliata una taratura tale che il flusso corrispondente sia almeno 1,5 volte superiore al flusso dell'impianto): specificare la portata (l/min) o la distanza S (mm) tra piattello e valvola
- Con foro sul piattello (CODICE/F, specificando la dimensione del foro) per la discesa lenta del carico a valvola chiusa

USE AND OPERATION:
These valves are used to prevent uncontrolled descent of a load in case of hose failure. When it exceeds the valve setting (reaction flow), the valve block the flow.

MATERIALS AND FEATURES:
Body: *zinc-plated steel*
Flat: *burnished steel*

APPLICATIONS:
Screw in the valve connecting V to the pressure flow and C to the actuator. The use together with a flow control valve is recommended.

ON REQUEST:
- *Preset hose bursts available (the reaction flow should be set 1,5 times the rate flow of the system). Please specify flow (lt/min) or distance S (mm) from the flat to the valve*
- *Hole on the flat (CODE/F, please specify hole dimension) for a slow load descent with closed valve*

SCHEMA IDRAULICO/*HYDRAULIC DIAGRAM*

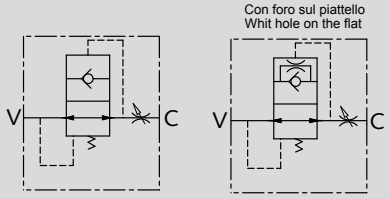

DIAGRAMMA PERDITE DI CARICO - PRESSURE DROPS CURVE

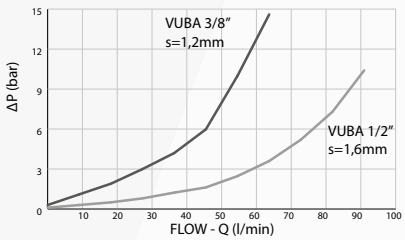

Temperatura olio: 50° - Viscosità olio: 30cSt
Oil temperature: 50° - Oil viscosity: 30cSt

50% OFF ALL PRICES

VALVE FOR DRILL

FLOWFIT®

CARATTERISTICHE/*RATINGS*

CODICE CODE	SIGLA TYPE	PORTATA MAX MAX FLOW Lt./min	PRICE
V1450	VDFS 3/4" – 16 UNF	350	£188.76

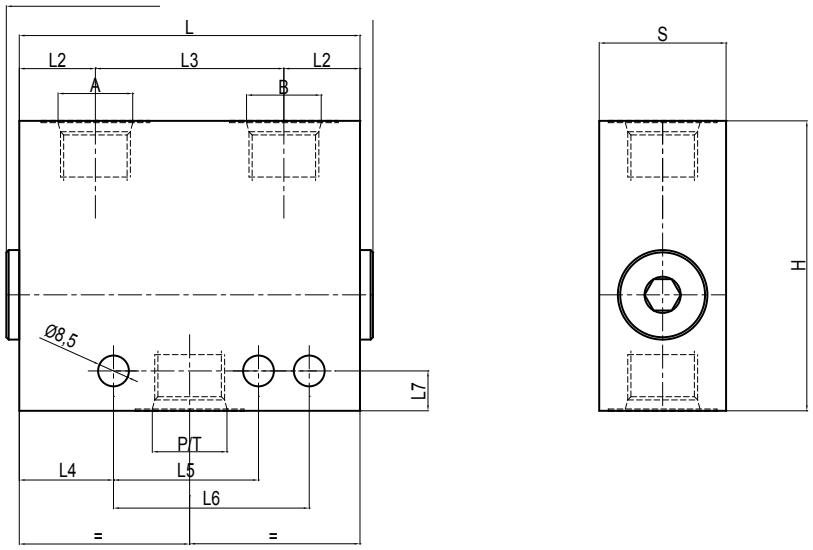

DIMENSIONI/*DIMENSIONS*

CODICE CODE	SIGLA TYPE	A - B P / T SAE	L mm	L1 mm	L2 mm	L3 mm	L4 mm	L5 mm	L6 mm	L7 mm	H mm	S mm
V1450	VDFS 3/4" – 16 UNF	3/4"–16	94	102	21	52	26	40	54	12	80	35

SCHEMA IDRAULICO/*HYDRAULIC DIAGRAM*

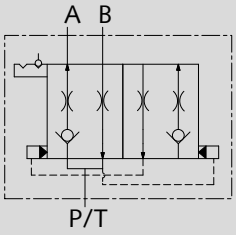

IMPIEGO:
Valvola utilizzata su macchine seminatrici per movimentare i segnafile. Alimentando e scaricando la bocca P/T si permette l'inversione automatica della salita/discesa di 2 cilindri singolo o doppio effetto.

MATERIALI E CARATTERISTICHE:
Corpo: acciaio zincato
Componenti interni: acciaio temprato termicamente e rettificato
Guarnizioni: BUNA N standard
Tenuta: trafilamento trascurabile

MONTAGGIO:
Collegare P/T all'alimentazione e A e B ai cilindri.

A RICHIESTA:
É possibile fornire la valvole con le bocche A, B, P/T con:
- riduzione femmina 1/4"
- raccordo con terminale tubo DIN 12L

USE AND OPERATION:
This type of valve is used on drills to handle the row marker. It allows the automatic ascent/descent inversion of single and double effect actuators, loading and unloading the port P/T.

MATERIALS AND FEATURES:
Body: *zinc-plated steel*
Internal parts: *hardened and ground steel*
Seals: *BUNA N standard*
Tightness: *minor leakage*

APPLICATIONS:
Connect P/T to the power and A and B to the actuator.

ON REQUEST:
The valve can be supplied with:
- *1/4" female adaptation*
- *Fitting for DIN 12L hose connection*

FLOWFIT®

REGENERATIVE VALVE

CARATTERISTICHE/*RATINGS*

CODICE CODE	SIGLA TYPE	RAPP. PILOT. PILOT RATIO	PORTATA MAX MAX FLOW Lt./min	RANGE DI PRESSIONE PRESSURE RANGE Bar	PRICE
V1220	VRSP 1/2"	1 : 4,5	60	60 – 350	**£156.71**
V1230	VRSP 3/4"	1 : 5,5	95	60 – 350	**£201.23**

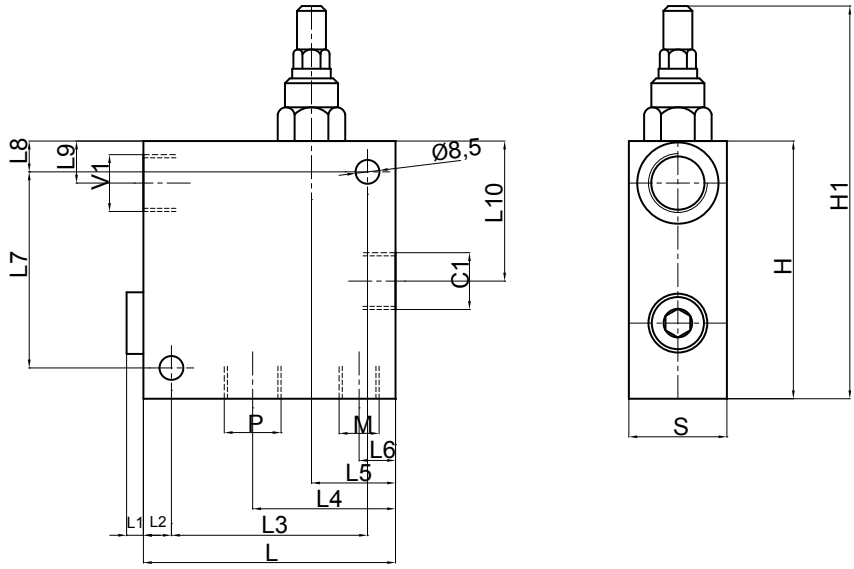

DIMENSIONI/*DIMENSIONS*

CODICE CODE	SIGLA TYPE	V1-V2 C1-C2 GAS	L mm	L1 mm	L2 mm	L3 mm	L4 mm	L5 mm	L6 mm	L7 mm	L8 mm	L9 mm	L10 mm	H mm	H1 mm	S mm
V1220	VRSP 1/2"	G 1/2"	90	6	10	70	51	30	13	70	11	15	50	92	142	35
V1230	VRSP 3/4"	G 3/4"	105	6	10	85	59	36	20	85	12	22	62	120	177	40

IMPIEGO:
Questa valvola consente di recuperare l'olio che arriva a C1 dallo stelo e di mandarlo al fondello attraverso la bocca P, sommandolo alla portata della pompa. Quando la pressione nel fondello del cilindro raggiunge il valore di taratura, l'olio che arriva dallo stelo viene mandato al serbatoio attraverso la bocca V1, ripristinando così un sistema non rigenerativo con spinta massima.
La pressione di esclusione del rigenerativo dipende solo dalla pressione nel fondello del cilindro.

MATERIALI E CARATTERISTICHE:
Corpo: acciaio zincato
Componenti interni: acciaio temprato termicamente e rettificato
Guarnizioni: BUNA N standard
Tenuta: trafilamento trascurabile

MONTAGGIO:
Collegare C1 allo stelo del cilindro, V1 all'alimentazione, P contemporaneamente al fondello del cilindro e all'alimentazione e M all'eventuale manometro.

USE AND OPERATION:
This valve allows to recover the oil from the rod to port C1 and to send it to the bottom valve through the port P, adding it to the pomp flow rate.
When the pressure in the bottom valve of the cylinder achieves the setting value, oil from the rod is sent to the tank through port V1, restoring a non-regenerative system with maximum thrust.
The exclusion pressure of the regenerative depends only on the pressure in the bottom valve of the cylinder.

MATERIALS AND FEATURES:
Body: *zinc-plated steel.*
Internal parts: *hardened and ground steel*
Seals: *BUNA N standard*
Tightness: *minor leakage*

APPLICATIONS:
Connect C1 to the cylinder stem, V1 to the pressure flow, P to the cylinder bottom valve and to the pressure flow at the same time, M to the manometer if there is.

SCHEMA IDRAULICO/*HYDRAULIC DIAGRAM*

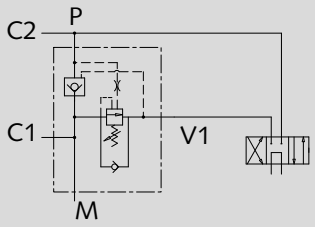

MANUAL EMERGENCY VALVE

FLOWFIT®

CARATTERISTICHE/*RATINGS*

CODICE CODE	SIGLA TYPE	PORTATA MAX MAX FLOW Lt./min	PRESSIONE MAX MAX PRESSURE Kg	PRICE
V1320	VEM 1/2"	50	350	£130.00

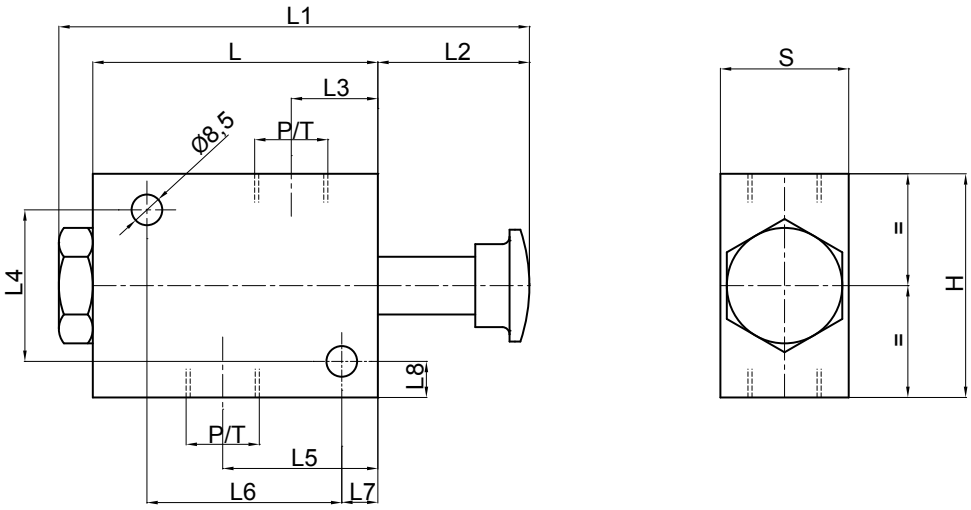

DIMENSIONI/*DIMENSIONS*

CODICE CODE	SIGLA TYPE	P/T GAS-MET	L mm	L1 mm	L2 mm	L3 mm	L4 mm	L5 mm	L6 mm	L7 mm	L8 mm	H mm	S mm
V1320	VEM 1/2"	G 1/2"	79	130	42	24	42	43	54	10	10	62	35

SCHEMA IDRAULICO/*HYDRAULIC DIAGRAM*

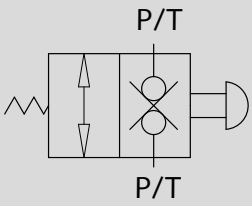

IMPIEGO:
Valvola utilizzata per aprire il passaggio di olio in un circuito idraulico attraverso un comando manuale. Una volta azionato manualmente il pulsante, il flusso dell'olio passa da P verso T o viceversa.

MATERIALI E CARATTERISTICHE:
Corpo: acciaio zincato
Componenti interni: acciaio temprato termicamente e rettificato
Guarnizioni: BUNA N standard
Tenuta: trafilamento trascurabile

MONTAGGIO:
Collegare le bocche P e T indifferentemente al distributore e al circuito. Quando il pulsante è premuto il flusso è libero, viceversa è bloccato in entrambe le direzioni.

USE AND OPERATION:
This pushbuttom valve allows oil passage in a hydraulic circuit by means of a slider. Once the manual button is set into action oil flows from P towards T or the other way round.

MATERIALS AND FEATURES:
Body: *zinc-plated steel*
Internal parts: *hardened and ground steel*
Seals: *BUNA N standard*
Tightness: *minor leakage*

APPLICATIONS:
Connect the ports P and T to either distributor and circuit. When the button is pressed the flow is free, otherwise the flow is blocked in both directions.

FLOWFIT® DUAL CROSS RELIEF VALVE WITH ANTI-CAVITATION AND SINGLE ADJUSTMENT

CARATTERISTICHE/*RATINGS*

CODICE CODE	SIGLA TYPE	PORTATA MAX MAX FLOW Lt./min	RANGE DI PRESSIONE PRESSURE RANGE Bar	PRICE
V0508/RU	VAA/RU 1/2"	60	50 - 300	£205.51

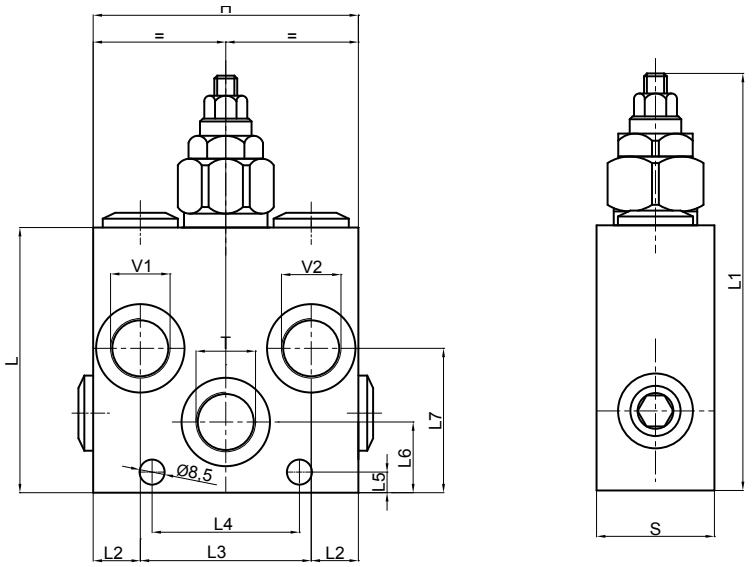

DIMENSIONI/*DIMENSIONS*

CODICE CODE	SIGLA TYPE	V1 - V2 C1 - C2 GAS-MET	L mm	L1 mm	L2 mm	L3 mm	L4 mm	L5 mm	L6 mm	L7 mm	H mm	S mm
V0508/RU	VAA/RU 1/2"	G 3/8"	90	142	16	58	50	7	24	49	90	40

IMPIEGO:
Valvola utilizzata per limitare la pressione sui condotti di alimentazione di motori e cilindri. Le 2 valvole di ritegno hanno la funzione di evitare l'effetto di cavitazione sul ramo di mandata durante la frenata dell'attuatore.

MATERIALI E CARATTERISTICHE:
Corpo: acciaio zincato
Componenti interni: acciaio temprato termicamente e rettificato
Guarnizioni: BUNA N standard
Tenuta: trafilamento trascurabile

MONTAGGIO:
Collegare V1 e V2 al motore, le rimanenti bocche V1 e V2 all'alimentazione e T allo scarico. Si raccomanda il montaggio vicino all'attuatore per ottenere un pronto funzionamento.

USE AND OPERATION:
This valve is used to block pressure to a certain setting in the 2 ports of both hydraulic motor and actuator. The 2 check valves provide overload protection and cavitation is avoid during the slowing down of the actuator.

MATERIALS AND FEATURES:
Body: *zinc-plated steel*
Internal parts: *hardened and ground steel*
Seals: *BUNA N standard*
Tightness: *minor leakage*

APPLICATIONS:
Connect V1 and V2 ports to the motor, the others V1 and V2 ports to the pressure flow and T to the tank. Mounting by the actuator is highly recommended in order to avoid pressure drops and get a prompt duty.

SCHEMA IDRAULICO/*HYDRAULIC DIAGRAM*

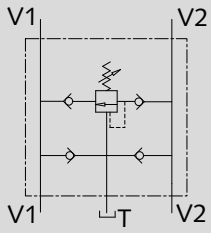

DIAGRAMMA PERDITE DI CARICO - PRESSURE DROPS CURVE

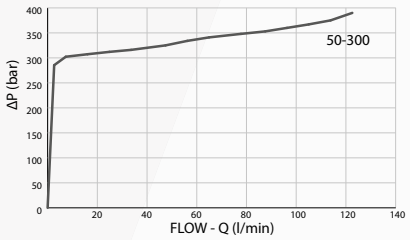

Temperatura olio: 50° - Viscosità olio: 30cSt
Oil temperature: 50° - Oil viscosity: 30cSt

3 PORT FLOW CONTROL VALVE EXCESS TO TANK FLANGEABLE ON DANFOSS MOTORS OMS

FLOWFIT®

CARATTERISTICHE/*RATINGS*

CODICE CODE	SIGLA TYPE	PORTATA MAX ENTRANTE MAX INLET FLOW Lt./min	PORTATA MAX REGOLATA MAX ADJUSTED FLOW Lt./min	PRESSIONE MAX MAX PRESSURE Bar	PRICE
V1122	RFP3 1/2" OMS	50	30	350	£154.93

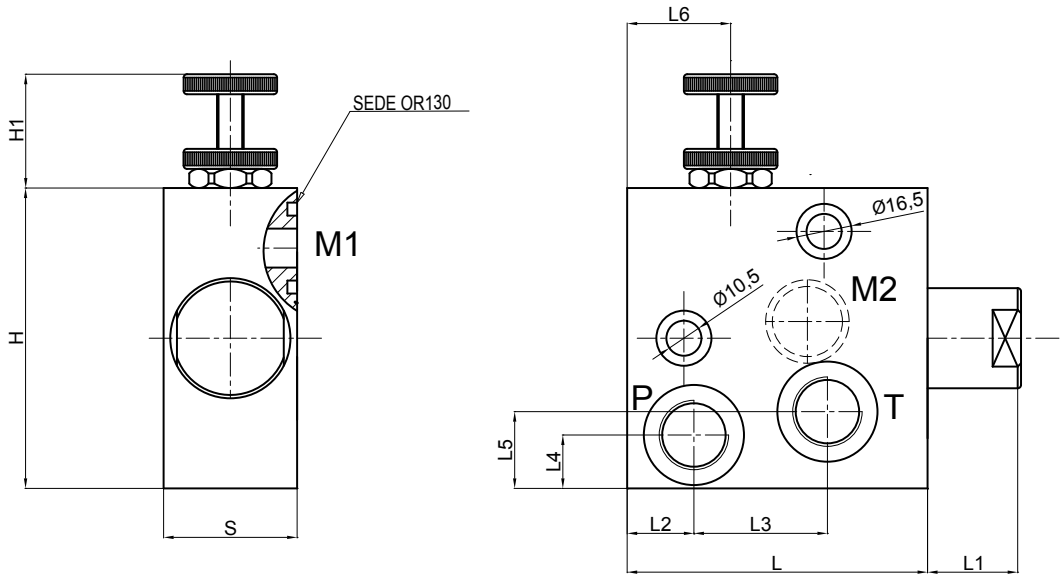

DIMENSIONI/*DIMENSIONS*

CODICE CODE	SIGLA TYPE	P - T GAS	L mm	L1 mm	L2 mm	L3 mm	L4 mm	L5 mm	L6 mm	H mm	H1 mm	S mm
V1122	RFP3 1/2" OMS	G 1/2"	90	26	20	40	16	23	31	90	35	40

SCHEMA IDRAULICO/*HYDRAULIC DIAGRAM*

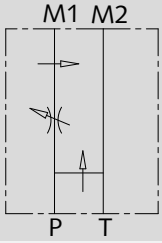

IMPIEGO:
Valvola che consente di mantenere costante la portata in P ad un valore stabilito, indipendentemente dalla pressione richiesta e dalla portata in entrata alla valvola. La portata in eccesso viene mandata direttamente allo scarico T (serbatoio).

MATERIALI E CARATTERISTICHE:
Corpo: acciaio zincato
Componenti interni: acciaio temprato termicamente e rettificato
Guarnizioni: BUNA N standard
Tenuta: per accoppiamento. Trafilamento minimo (poche gocce al minuto)

MONTAGGIO:
Flangiare M1 e M2 al motore, collegare le bocche P e T all'alimentazione.

USE AND OPERATION:
This valve enables to keep "P" flow constant to a certain setting, independently of the required pressure or the inlet flow of the valve. Exceeded flow is drained directly in T (tank).

MATERIALS AND FEATURES:
Body: *zinc-plated steel*
Internal parts: *hardened and ground steel*
Seals: *BUNA N standard*
Tightness: *by diameter combination. Minor leakage (few drops per minute)*

APPLICATIONS:
Connect M1 and M2 to the motor and P and T to the pressure.

BRAKE UNCLAMPING VALVE, FLANGEABLE TO DANFOSS MOTORS OMP/OMR

CARATTERISTICHE/*RATINGS*

CODICE CODE	SIGLA TYPE	PORTATA MAX MAX FLOW Lt./min	PRESSIONE MAX MAX PRESSURE Bar	PRICE
V0333	VSBF 1/2" OMP/OMR	60	300	**£56.99**

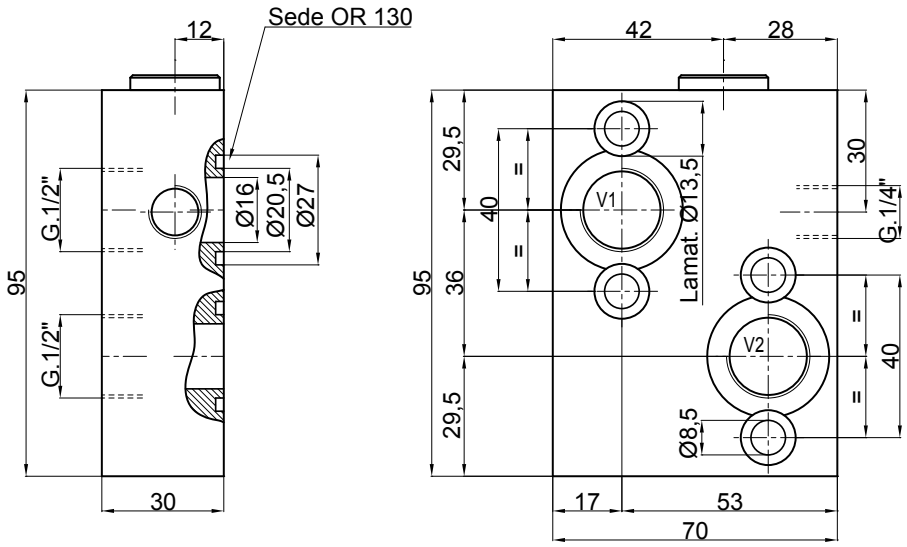

IMPIEGO:
Valvola utilizzata per sbloccare il freno idraulico dei motori.

MATERIALI E CARATTERISTICHE:
Corpo: acciaio zincato
Componenti interni: acciaio temprato termicamente e rettificato
Guarnizioni: BUNA N standard

MONTAGGIO:
Flangiare V1 e V2 al motore, collegare le rimanenti bocche V1 e V2 all'alimentazione e collegate la bocca da 1/4" al freno motore.

USE AND OPERATION:
This valve is used to unlock the motors hydraulic brake.

MATERIALS AND FEATURES:
Body: *zinc-plated steel*
Internal parts: *hardened and ground steel*
Seals: *BUNA N standard*

APPLICATIONS:
Flange V1 and V2 to the motor, connect the other side of V1 and V2 to the pressure flow and connect the 1/4" port to the motor brake.

SCHEMA IDRAULICO/*HYDRAULIC DIAGRAM*

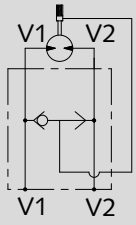

BRAKE UNCLAMPING VALVE, FLANGEABLE TO DANFOSS MOTORS OMS

FLOWFIT®

CARATTERISTICHE/*RATINGS*

CODICE CODE	SIGLA TYPE	PORTATA MAX ENTRANTE MAX INLET FLOW Lt./min	PORTATA MAX REGOLATA MAX ADJUSTED FLOW Lt./min	PRESSIONE MAX MAX PRESSURE Bar	PRICE
V1122	RFP3 1/2" OMS	50	30	350	**£55.20**

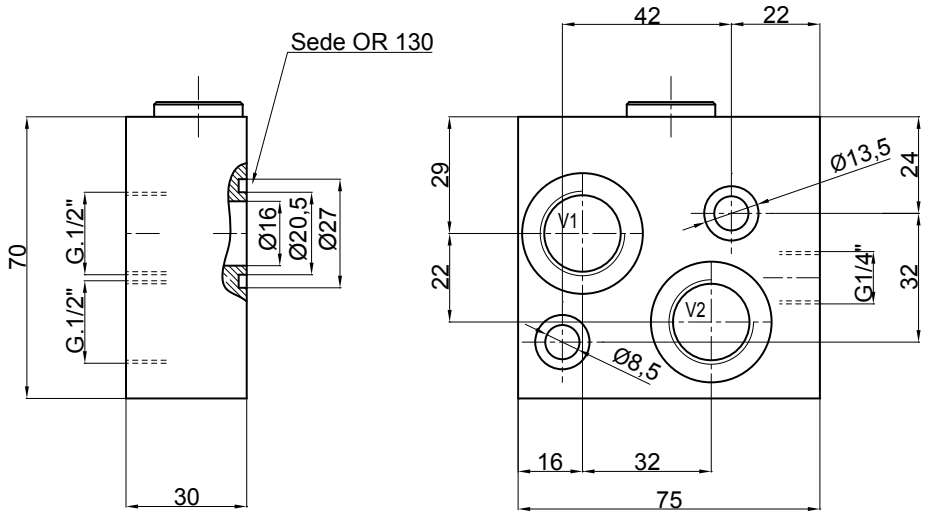

SCHEMA IDRAULICO/*HYDRAULIC DIAGRAM*

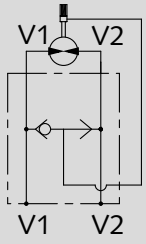

IMPIEGO:
Valvola utilizzata per sbloccare il freno idraulico dei motori.

MATERIALI E CARATTERISTICHE:
Corpo: acciaio zincato
Componenti interni: acciaio temprato termicamente e rettificato
Guarnizioni: BUNA N standard

MONTAGGIO:
Flangiare V1 e V2 al motore, collegare le rimanenti bocche V1 e V2 all'alimentazione e collegate la bocca da 1/4" al freno motore.

USE AND OPERATION:
This valve is used to unlock the motors hydraulic brake.

MATERIALS AND FEATURES:
Body: *zinc-plated steel*
Internal parts: *hardened and ground steel*
Seals: *BUNA N standard*

APPLICATIONS:
Flange V1 and V2 to the motor, connect the other side of V1 and V2 to the pressure flow and connect the 1/4" port to the motor brake.

FLOWFIT® DUAL CROSS RELIEF VALVE FLANGEABLE ON DANFOSS MOTORS OMP/OMR BY SCREWS

CARATTERISTICHE/*RATINGS*

CODICE CODE	SIGLA TYPE	PORTATA MAX MAX FLOW Lt./min	PRICE
V0503/000*	VAU OM 1/2" WSC	40	£82.81

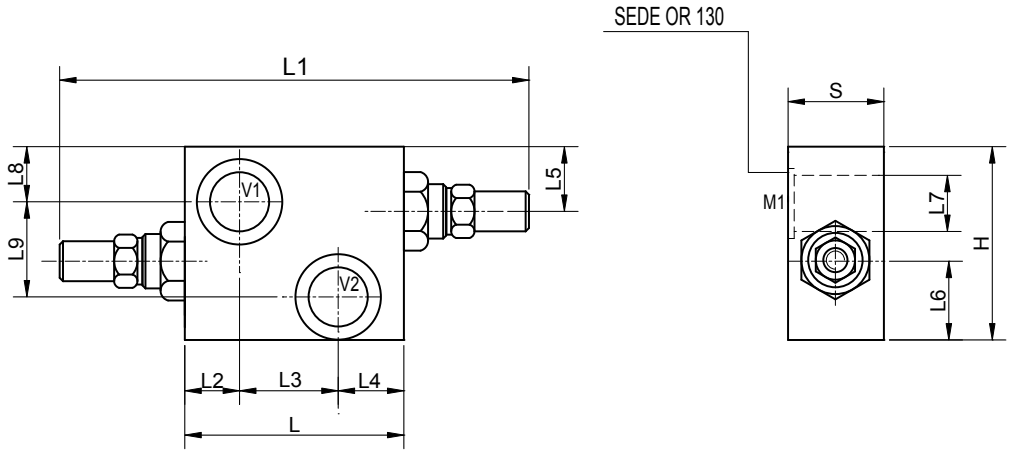

DIMENSIONI/*DIMENSIONS*

CODICE CODE	SIGLA TYPE	V1 - V2 C1 - C2 GAS-MET	L mm	L1 mm	L2 mm	L3 mm	L4 mm	L5 mm	L6 mm	Ø L7 mm	L8 mm	L9 mm	H mm	S mm
V0503/000*	VAU OM 1/2" WSC	G 1/2"	80	164	19	36	25	20	29	21,3	18	36	70	30

*Specificare valore della molla desiderata. Vedi tabella sottostante.

**please specify the desired setting range. Se the table below.*

IMPIEGO:
Costituite da due valvole di massima pressione con scarico incrociato, sono utilizzate per limitare la pressione in entrambi i rami di un attuatore o motore idraulico ad un determinato valore di taratura. Trovano il miglior impiego sia come valvole antishock sia per regolare i due rami di un circuito idraulico a diversi valore di pressione. La flangiatura diretta, adatta per motori Danfoss della serie OMP-OMR, garantisce la massima sicurezza, minime perdite di carico e compattezza d'installazione.

MATERIALI E CARATTERISTICHE:
Corpo: acciaio zincato
Componenti interni: acciaio temprato termicamente e rettificato
Guarnizioni: BUNA N standard
Tenuta: a cono guidato.
Trafilamento trascurabile

MONTAGGIO:
Flangiare M1 e M2 direttamente al motore tramite i bulloni forati (non in dotazione) e collegare V1 e V2 all'alimentazione. ottenere un pronto funzionamento.

A RICHIESTA:
- Molle per diversi campi di taratura (tabella)
- Pressione di taratura diversa da quella standard (CODICE/T specificando il valore di taratura)

USE AND OPERATION:
Made up by 2 relief valves with crossed tank, this valve is used to block pressure to a certain setting in the 2 ports of an actuator/hydraulic motor. It's ideal to provide protection against sudden shock pressures and to adjust different pressures in the 2 ports of an hydraulic circuit as well. Direct flange is ideal for Danfoss motors type OMP-OMR and provides a maximum safety, very low pressure drops and solid installation.

MATERIALS AND FEATURES:
Body: *zinc-plated steel*
Internal parts: *hardened and ground steel.*
Seals: *BUNA N standard*
Poppet type: *minor leakage*

APPLICATIONS:
Flange M1 and M2 directly to the motor by screws (not included) and connect ports V1 and V2 to pressure flow.

ON REQUEST:
- *Different setting range (see the table)*
- *Other setting available (CODE/T: please specify the desired setting)*

SCHEMA IDRAULICO/*HYDRAULIC DIAGRAM*

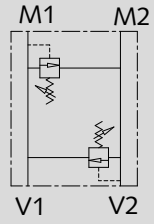

CODICE CODE	CAMPO DI TARATURA SETTING RANGE (Bar)
COD/070	10 – 70
COD/200	50 – 200 STANDARD
COD/300	100 - 300

DIAGRAMMA PERDITE DI CARICO - PRESSURE DROPS CURVE

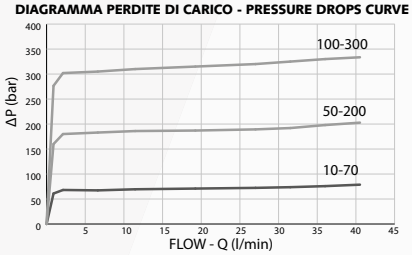

Temperatura olio: 50° - Viscosità olio: 30cSt
Oil temperature: 50° - Oil viscosity: 30cSt

MECHANICAL DRIVE END STROKE VALVE, NORMALLY CLOSED

FLOWFIT®

CARATTERISTICHE/*RATINGS*

CODICE CODE	SIGLA TYPE	PORTATA MAX MAX FLOW Lt./min	PRESSIONE MAX MAX PRESSURE Bar	PRICE
V0815	V-FCC 1/2" NC	80	350	**£204.79**

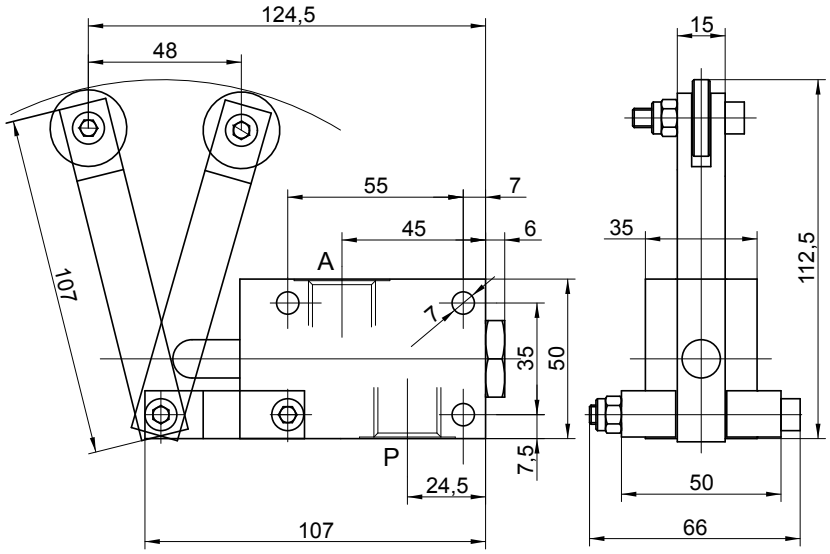

SCHEMA IDRAULICO/*HYDRAULIC DIAGRAM*

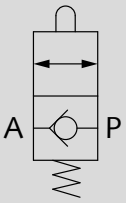

DIAGRAMMA PERDITE DI CARICO - PRESSURE DROPS CURVE

Curve valide per corsa efficace ≥ 50% - Curves valid for actual stroke ≥ 50%

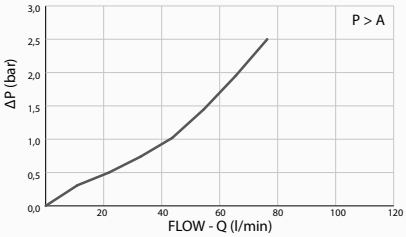

Temperatura olio: 50° - Viscosità olio: 30cSt
Oil temperature: 50° - Oil viscosity: 30cSt

IMPIEGO:

Valvola utilizzata per aprire il passaggio di olio in un circuito idraulico (valvola normalmente chiusa). Una volta azionato meccanicamente il cursore, si ha il libero passaggio dell'olio da P a A. Può avere principalmente due impieghi:

a. per azionare la sequenza di due attuatori;
b. come valvola di fine corsa, con flusso direttamente collegato allo scarico.

MATERIALI E CARATTERISTICHE:

Corpo: acciaio zincato
Componenti interni: acciaio temprato termicamente e rettificato
Guarnizioni: BUNA N standard
Tenuta: a sfera. Trafilamento nullo

MONTAGGIO:

Collegare P alla linea di utilizzo e A direttamente allo scarico.
Lo schema di montaggio può variare in base al servizio richiesto.

USE AND OPERATION:

This valve allows oil passage in a hydraulic circuit (normally closed valve). Once the slider is set into action, oil flow is free from P to A. It can be used:

a. *to set the sequence of 2 actuators;*
b. *as an end strokes valve, where flow is directly connected to the tank.*

MATERIALS AND FEATURES:

Body: *zinc-plated steel*
Internal parts: *hardened and ground steel*
Seals: *BUNA N standard*
Ball type: *any leakage*

APPLICATIONS:

Connect A directly to the tank and P as for necessity.
Mounting scheme can vary according to the use.

FLOWFIT® GAUGE ISOLATOR — IN LINE AND 90° TYPE

CARATTERISTICHE/*RATINGS*

CODICE CODE	SIGLA TYPE	PRESS. ESERCIZIO WORKING PRESS. Bar	PRESSIONE MAX MAX PRESSURE Bar	PRICE
EM001L	EML 1/4" MF	400	600	£17.47
EM001N	EM90° 1/4" MF	400	600	£17.47

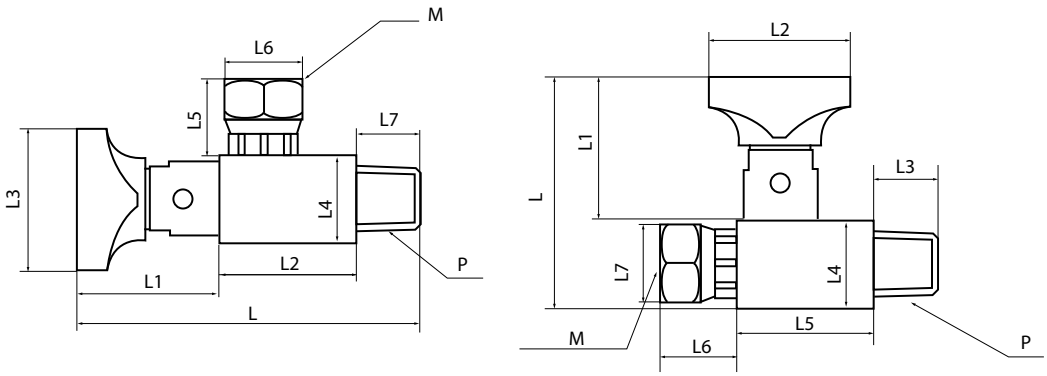

DIMENSIONI/*DIMENSIONS*

CODICE CODE	SIGLA TYPE	P BSPT	M BSPT	L mm	L1 mm	L2 mm	L3 mm	L4 mm	L5 mm	L6 mm	L7 mm
EM001L	EML 1/4" MF	M 1/4"	F 1/4"	49,7	30,7	30,3	13,8	19	30	16,2	17
EM001N	EM90° 1/4" MF	M 1/4"	F 1/4"	72	29,5	29	30,3	19	16,2	17	13,8

IMPIEGO:
Sono utilizzati per aprire o chiudere il flusso di olio al manometro in un impianto oleodinamico.

MATERIALI E CARATTERISTICHE:
Corpo: acciaio nickelato
Guarnizioni: NBR

MONTAGGIO:
Avvitare l'esclusore al circuito con attacco maschio P e fissare il manometro all'attacco femmina M. Per aprire o chiudere il flusso ruotare la manopola rispettivamente in apertura e chiusura.

USE AND OPERATION:
These valves are used to open or close the oil flow to the gauge in an hydraulic system.

MATERIALS AND FEATURES:
Body: *nickel steel*
Seals: *NBR*

APPLICATIONS:
Screw the gauge isolator to the hydraulic system to the male port P and fix the gauge to female port M. In order to open or close the flow turn the knob.

SCHEMA IDRAULICO/*HYDRAULIC DIAGRAM*

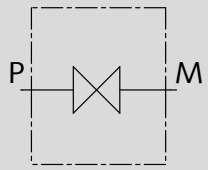

MECHANICAL DRIVE END STROKE VALVE, NORMALLY CLOSED

FLOWFIT®

CARATTERISTICHE/*RATINGS*

CODICE CODE	SIGLA TYPE	PORTATA MAX MAX FLOW Lt./min	PRESSIONE MAX MAX PRESSURE Bar	PRICE
V0879/AP	DF 3 VIE 1/4" AP ACC.	20	500	£57.88
V0881/AP	DF 3 VIE 3/8" AP ACC.	35	500	£57.88
V0891/AP	DF 3 VIE 1/2" AP ACC.	60	500	£68.98
V0901/AP	DF 3 VIE 3/4" AP ACC.	100	500	£75.68
V0911/AP	DF 3 VIE 1" AP ACC.	180	500	£117.19

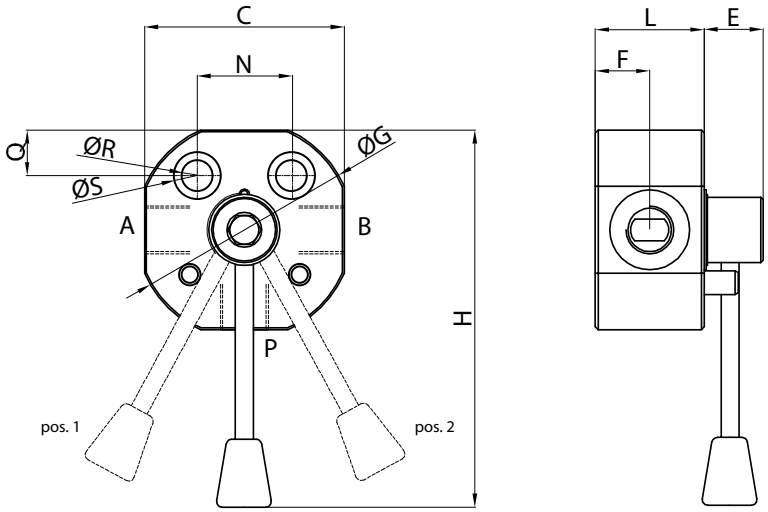

DIMENSIONI/*DIMENSIONS*

CODICE CODE	SIGLA TYPE	A - B P GAS	C mm	N mm	Q mm	H mm	ØR mm	ØS mm	ØG mm	F mm	L mm	E mm
V0879/AP	DF 3 VIE 1/4" AP ACC.	1/4"	56	24	10	148	8,5	13,5	62	23,5	42,5	21
V0881/AP	DF 3 VIE 3/8" AP ACC.	3/8"	56	24	10	148	8,5	13,5	62	23,5	42,5	21
V0891/AP	DF 3 VIE 1/2" AP ACC.	1/2"	70	30	11	160	10,5	17	86	26	42,5	21
V0901/AP	DF 3 VIE 3/4" AP ACC.	3/4"	80	32	11	165	10,5	17	100	31	58	20
V0911/AP	DF 3 VIE 1" AP ACC.	1"	90	32	11	170	10,5	17	108	33	62	20

SCHEMA IDRAULICO/*HYDRAULIC DIAGRAM*

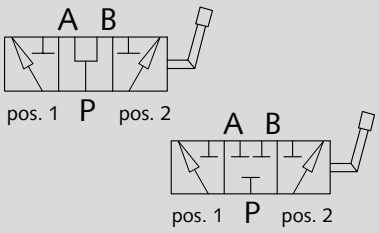

IMPIEGO:
Valvole utilizzate per deviare il flusso in ingresso verso due bocche d'uscita.

MATERIALI E CARATTERISTICHE:
Corpo: acciaio
Componenti interni: acciaio temprato termicamente e rettificato
Guarnizioni: BUNA N standard
Tenuta: trafilamento trascurabile

MONTAGGIO:
Collegare P all'alimentazione e le bocche A e B ai rami del circuito idraulico a cui si vuole deviare il flusso. Con leva in pos. 1 si alimenta la bocca A, con leva in pos. 2 si alimenta la bocca B. Con leva in posizione centrale le bocche P, A e B sono tutte collegate (centro aperto).

USE AND OPERATION:
Diverter flow is used to divert the flow towards 2 different outlets.

MATERIALS AND FEATURES:
Body: *steel*
Internal parts: *hardened and ground steel*
Seals: *BUNA N standard*
Tightness: *minor leakage*

APPLICATIONS:
Connect P to the pressure flow, A and B to the ports of the hydraulic circuit where flow has to be diverted. With lever in position 1 the flow is connected towards port A; with lever in position 2, the flow is connected towards port B. With lever in central position ports P, A and B are all connected (open centre).

FILTREC
Technical Filtration

HYDRAULIC FILTER CROSS REFERENCE LIST

Contact us on 01584 876033 or email sales@flowfitonline.com to request your printed copy or download catalogue and pricelist in pdf format at www.flowfitonline.com

FILTREC
Technical Filtration

INTERNATIONAL CROSS REFERENCES

This guide offers you the most common brands stocked in the UK. However we also offer on CD a much more comprehensive listing, or you can download the latest cross reference at www.flowfitonline.com.

MANUFACTURER INDEX

	PAGE
ARGO	1
BALDWIN	1
BOSCH	1
BRUENINGHAUS HYD	2
COOPERS	2
DONALDSON	2
EPPENSTEINER	2
FAIREY ARLON	4
FAWCETT	12
FILTERSOFT	14
FINN FILTER	14
FLEETGUARD	14
FLOW EZY	16
HYCON	18
HYDAC	18
INTERNORMEN	19
MAHLE	24
MANN+HUMMEL	32
MP FILTRI	35
NORMAN	35
OMT	37
PALL	37
PARKER	38
PTI	43
REGEL TECHNIK	48
SCHROEDER	49
SEPARATION TECHNOLOGIES	49
SOFIMA HYDRAULICS	52
SOFRALUB	56
STAUFF	61
TAISEI KOGYO	61
UCC	65
UFI	66
VICKERS	66
ZINGA	67
	68

PLEASE ASK FOR A PRICE LIST IF NOT ATTACHED

THE WORLD'S LEADING REPLACEMENT HYDRAULIC FILTER MANUFACTURERS

MANUFACTURING OF HYDRAULIC CYLINDERS • SECTION NP8

MANUFACTURING OF HYDRAULIC CYLINDERS

SERIES 200 - DOUBLE ACTING HYDRAULIC CYLINDER NP124

FLOWFIT®

FLOWFIT®

SERIES 200 – DOUBLE ACTING HYDRAULIC CYLINDER

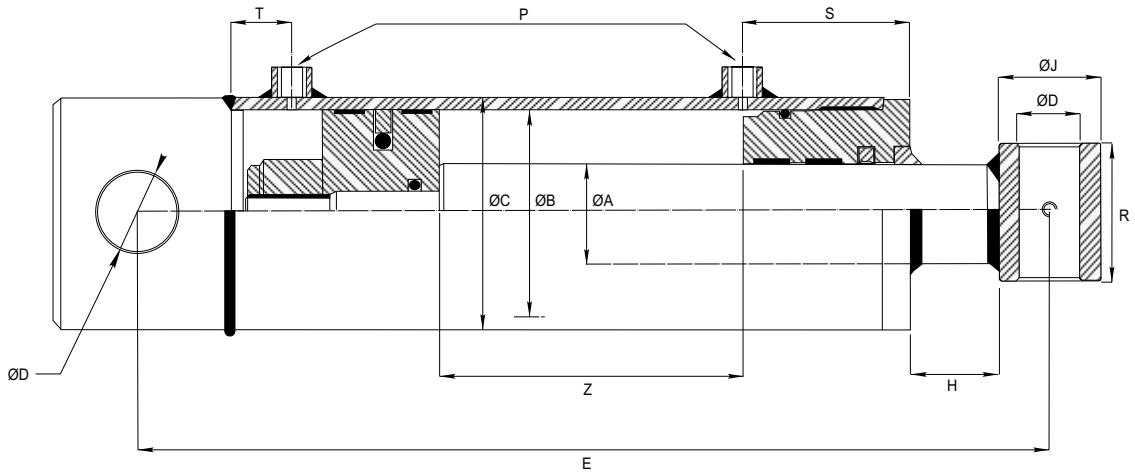

Presión de trabajo: 180 bars.
Velocidad: 0.5 m/s.
Temperatura de trabajo: -25ºC - +80ºC
Aceite: Aceite mineral
Vástago: C45 f7 25 micras.
Tubo: St52.3 Din2393 Iso H9

Working pressure: 180 bars.
Speed: 0.5 m/s.
Working temperature: -25ºC - +80ºC.
Oil: Mineral oil.
Rod: C45 f7 25 microns.
Tube: St52.3 Din2393 Iso H9

Cálculo del volumen de un cilindro

Volumen = π x r² x h(altura)
Ejemplo = Cilindro 40-70/80-400(mm.)
3.14 x 3.5² x 0,04(mts.)
Total = 1,5386 lts.

Cálculo de la fuerza de empuje

Empuje = π x r² x presión(bar)
Ejemplo = Cilindro 40-70/80
3.14 x 3.5² x 150(bar)
Total = 5.769,75 Kgs.

Cálculo de la fuerza de tracción

Empuje = π x r² x presión(bar)
Ejemplo = Cilindro 40-70/80
Calcular área vástago: 3.14 x 2.0² =12,56
Calcular área tubo: 3.14 x 3.5² = 38,465
Restar áreas: 38,465-12,56 = 25,905.
Fuerza: 25,905 x 150(bar)= 3.885,79 Kgs.

Pandeo
Buckling

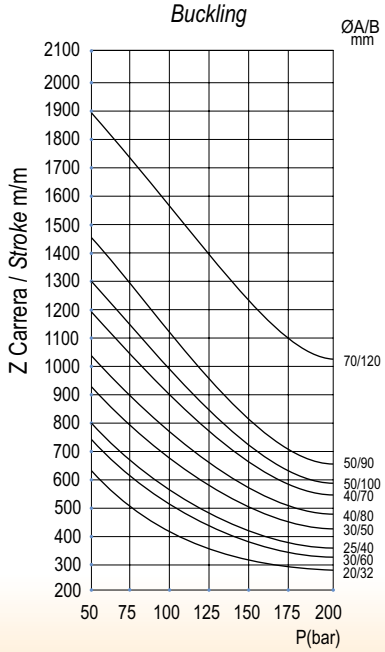

Fuerza de empuje
Upward thrust

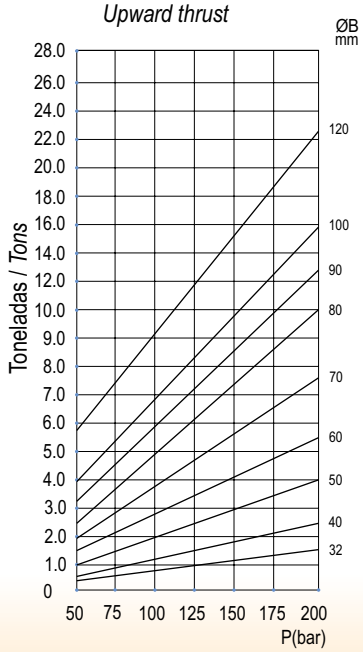

Fuerza de tracción
Tractive effort

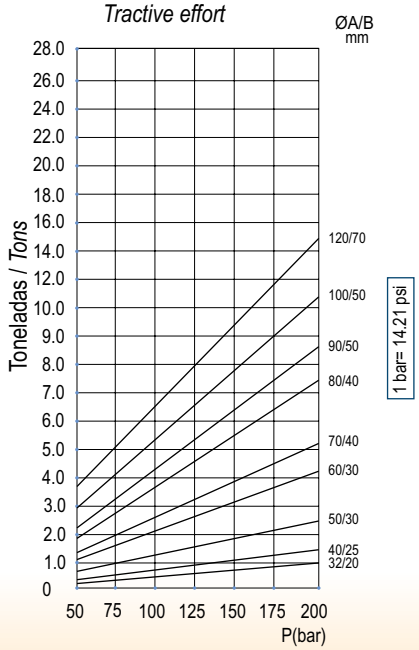

50% OFF ALL PRICES

SERIES 200 – DOUBLE ACTING HYDRAULIC CYLINDER

FLOWFIT®

ORDER CODE	ROD A	Z STROKE	E CLOSED CENTRE	B BORE	C OD	D PIN HOLE	H	T	J	R	S	P	PRICE
200/010	20	100	255	32	40	16.25	46	10	30	35	33	1/4 BSP	£82.86
200/015		150	305									1/4 BSP	£85.28
200/020		200	355									1/4 BSP	£90.87
200/025		250	405									1/4 BSP	£93.10
200/030		300	455									1/4 BSP	£95.64
200/035		350	505									1/4 BSP	£100.74
200/040		400	555									1/4 BSP	£103.98
200/050		500	655									1/4 BSP	£108.36
200/060		600	755									1/4 BSP	£142.81
200/070		700	855									1/4 BSP	£155.65
200/080		800	955									1/4 BSP	£162.47
200/090		900	1055									1/4 BSP	£167.33
200/100		1000	1155									1/4 BSP	£179.61
200/110		1100	1255									1/4 BSP	£191.94
200/120		1200	1355									1/4 BSP	£204.09
200/130		1300	1455									1/4 BSP	£216.57
200/140		1400	1555									1/4 BSP	£228.88
200/150		1500	1655									1/4 BSP	£245.00
201/010	25	100	270	40	50	20.5	30	16	35	40	42	3/8 BSP	£90.97
201/015		150	320									3/8 BSP	£94.75
201/020		200	370									3/8 BSP	£98.59
201/025		250	420									3/8 BSP	£101.89
201/030		300	470									3/8 BSP	£106.20
201/035		350	520									3/8 BSP	£111.08
201/040		400	570									3/8 BSP	£113.82
201/050		500	670									3/8 BSP	£121.47
201/060		600	770									3/8 BSP	£129.04
201/070		700	870									3/8 BSP	£136.69
201/080		800	970									3/8 BSP	£144.31
201/090		900	1070									3/8 BSP	£170.53
201/100		1000	1170									3/8 BSP	£183.00
201/110		1100	1270									3/8 BSP	£195.45
201/120		1200	1370									3/8 BSP	£208.61
201/130		1300	1470									3/8 BSP	£220.37
201/140		1400	1570									3/8 BSP	£232.88
201/150		1500	1670									3/8 BSP	£245.27
202/010	30	100	300	50	60	25.5	47	20	35	45	43	3/8 BSP	£111.61
202/015		150	350									3/8 BSP	£116.42
202/020		200	400									3/8 BSP	£121.21
202/025		250	450									3/8 BSP	£128.07

FLOWFIT®

SERIES 200 – DOUBLE ACTING HYDRAULIC CYLINDER

ORDER CODE	ROD A	Z STROKE	E CLOSED CENTRE	B BORE	C OD	D PIN HOLE	H	T	J	R	S	P	PRICE
202/030		300	500									3/8 BSP	£130.85
202/035		350	550									3/8 BSP	£137.25
202/040		400	600									3/8 BSP	£140.46
202/045		450	650									3/8 BSP	£146.78
202/050		500	700									3/8 BSP	£150.09
202/060		600	800									3/8 BSP	£159.74
202/070		700	900									3/8 BSP	£169.34
202/080		800	1000	50	60		47				43	3/8 BSP	£178.94
202/090		900	1100									3/8 BSP	£188.55
202/100		1000	1200									3/8 BSP	£198.19
202/110		1100	1300									3/8 BSP	£231.50
202/120		1200	1400									3/8 BSP	£246.23
202/130		1300	1500									3/8 BSP	£260.93
202/140		1400	1600									3/8 BSP	£275.70
202/150		1500	1700									3/8 BSP	£290.43
203/010		100	300									3/8 BSP	£128.03
203/015		150	350									3/8 BSP	£132.80
203/020	30	200	400			25.5		20	35	45		3/8 BSP	£138.20
203/025		250	450									3/8 BSP	£144.29
203/030		300	500									3/8 BSP	£148.35
203/035		350	550									3/8 BSP	£156.02
203/040		400	600									3/8 BSP	£158.52
203/045		450	650									3/8 BSP	£165.05
203/050		500	700									3/8 BSP	£168.87
203/060		600	800									3/8 BSP	£178.81
203/070		700	900	60	70		46				47	3/8 BSP	£188.92
203/080		800	1000									3/8 BSP	£223.87
203/085		850	1050									3/8 BSP	£232.64
203/090		900	1100									3/8 BSP	£240.94
203/100		1000	1200									3/8 BSP	£251.28
203/110		1100	1300									3/8 BSP	£267.90
203/120		1200	1400									3/8 BSP	£284.42
203/130		1300	1500									3/8 BSP	£300.97
203/140		1400	1600									3/8 BSP	£317.52
203/150		1500	1700									3/8 BSP	£334.09
204/010		100	310									3/8 BSP	£166.00
204/020		200	410									3/8 BSP	£175.09
204/025	40	250	460	70	80	30.5	34	26	50	55	51	3/8 BSP	£182.39
204/030		300	510									3/8 BSP	£189.67
204/035		350	560									3/8 BSP	£197.01

50% OFF ALL PRICES

SERIES 200 – DOUBLE ACTING HYDRAULIC CYLINDER

FLOWFIT®

ORDER CODE	ROD A	Z STROKE	E CLOSED CENTRE	B BORE	C OD	D PIN HOLE	H	T	J	R	S	P	PRICE
204/040		400	610									3/8 BSP	£204.28
204/050		500	710									3/8 BSP	£218.90
204/055		550	760									3/8 BSP	£226.01
204/060		600	810									3/8 BSP	£233.48
204/070		700	910									3/8 BSP	£248.05
204/080		800	1010									3/8 BSP	£262.62
204/090		900	1110									3/8 BSP	£277.20
204/100		1000	1210	70	80		34				51	3/8 BSP	£307.98
204/110		1100	1310									3/8 BSP	£323.43
204/120		1200	1410									3/8 BSP	£334.15
204/130		1300	1510									3/8 BSP	£353.62
204/140		1400	1610									3/8 BSP	£373.05
204/150		1500	1710									3/8 BSP	£392.44
204/180		1800	2010									3/8 BSP	£392.44
205/010		100	310									3/8 BSP	£171.42
205/020	40	200	410						50	55		3/8 BSP	£216.56
205/025		250	460									3/8 BSP	£225.09
205/030		300	510									3/8 BSP	£233.60
205/035		350	560									3/8 BSP	£242.15
205/040		400	610									3/8 BSP	£250.68
205/050		500	710									3/8 BSP	£267.69
205/060		600	810									3/8 BSP	£284.72
205/070		700	910	80	90	30.5	21	26			56	3/8 BSP	£301.74
205/080		800	1010									3/8 BSP	£318.78
205/090		900	1110									3/8 BSP	£334.61
205/100		1000	1210									3/8 BSP	£353.22
205/110		1100	1310									3/8 BSP	£373.87
205/120		1200	1410									3/8 BSP	£395.88
205/130		1300	1510									3/8 BSP	£417.94
205/140		1400	1610									3/8 BSP	£440.06
205/150		1500	1710									3/8 BSP	£462.11
206/005		50	275									3/8 BSP	£226.92
206/010		100	325									3/8 BSP	£229.25
206/020		200	425									3/8 BSP	£262.13
206/030		300	525									3/8 BSP	£295.23
206/040	50	400	625	90	100		28		60	70	60	3/8 BSP	£324.97
206/050		500	725									3/8 BSP	£360.32
206/060		600	825									3/8 BSP	£394.34
206/070		700	925									3/8 BSP	£427.35
206/080		800	1025									3/8 BSP	£443.05

FLOWFIT®

SERIES 200 – DOUBLE ACTING HYDRAULIC CYLINDER

ORDER CODE	ROD A	Z STROKE	E CLOSED CENTRE	B BORE	C OD	D PIN HOLE	H	T	J	R	S	P	PRICE
206/090	50	900	1125	90	100	30.5	28	26	60	70	60	3/8 BSP	£474.85
206/100		1000	1225									3/8 BSP	£491.74
206/110		1100	1325									3/8 BSP	£510.40
206/120		1200	1425									3/8 BSP	£540.61
206/130		1300	1525									3/8 BSP	£570.69
206/140		1400	1625									3/8 BSP	£601.34
206/150		1500	1725									3/8 BSP	£630.91
207/010		100	325	100	115		25				67	1/2 BSP	£296.46
207/020		200	425									1/2 BSP	£309.07
207/030		300	525									1/2 BSP	£336.53
207/040		400	625									1/2 BSP	£363.99
207/050		500	725									1/2 BSP	£391.34
207/060		600	825									1/2 BSP	£422.44
207/070		700	925									1/2 BSP	£446.20
207/080		800	1025									1/2 BSP	£474.89
207/090		900	1125									1/2 BSP	£501.10
207/100		1000	1225									1/2 BSP	£528.53
207/110		1100	1325									1/2 BSP	£562.52
207/120		1200	1425									1/2 BSP	£597.87
207/130		1300	1525									1/2 BSP	£632.98
207/140		1400	1625									1/2 BSP	£667.90
207/150		1500	1725									1/2 BSP	£702.75
208/020	70	200	510	120	140	40.5	39	30	80	80		1/2 BSP	£554.08
208/040		400	710									1/2 BSP	£554.08
208/050		500	810									1/2 BSP	£576.98
208/060		600	910									1/2 BSP	£691.46
208/070		700	1010									1/2 BSP	£750.99
208/100		1000	1310									1/2 BSP	£929.61
208/130		1300	1610									1/2 BSP	£1,110.72

50% OFF ALL PRICES

FLOWFIT HYDRAULIC POWER UNITS

UP100 HYDRAULIC POWER PACKS....14
UP100 POWERUNIT BUILD YOUR OWN....15
UP100 P+T HYDRAULIC CIRCUIT POWER PACKS....18
UP100 SINGLE ACTING HYDRAULIC CIRCUIT POWER PACKS....20
UP100 DOUBLE ACTING HYDRAULIC CIRCUIT POWER PACKS....24
UP100 12VDC AND 24VDC INSTALLATION AND DRAWING DETAILS....27
UP100 110VAC AND 240VAC INSTALLATION AND DRAWING DETAILS....29
UP100 415V AC INSTALLATION AND DRAWING DETAILS....32
HF500 250 BAR INDUSTRIAL POWER PACKS....35
HF500 INSTALLATION AND DRAWING DETAILS....38
HF600 350 BAR VARIABLE FLOW HIGH PRESSURE POWER PACKS....39
HF600 INSTALLATION AND DRAWING DETAILS....41
UP50 MINI-FLOW HYDRAULIC POWER PACK....42
ET-ELECTRIC DC MOTOR PUMP SET....44
HF800 HONDA PETROL ENGINE DRIVEN POWER PACK....45
HF700 LONCIN PETROL ENGINE DRIVEN POWER PACK....47
HF900 HATZ DIESEL ENGINE DRIVEN POWER PACK....49
CUSTOM BUILT POWER PACK FORM....51

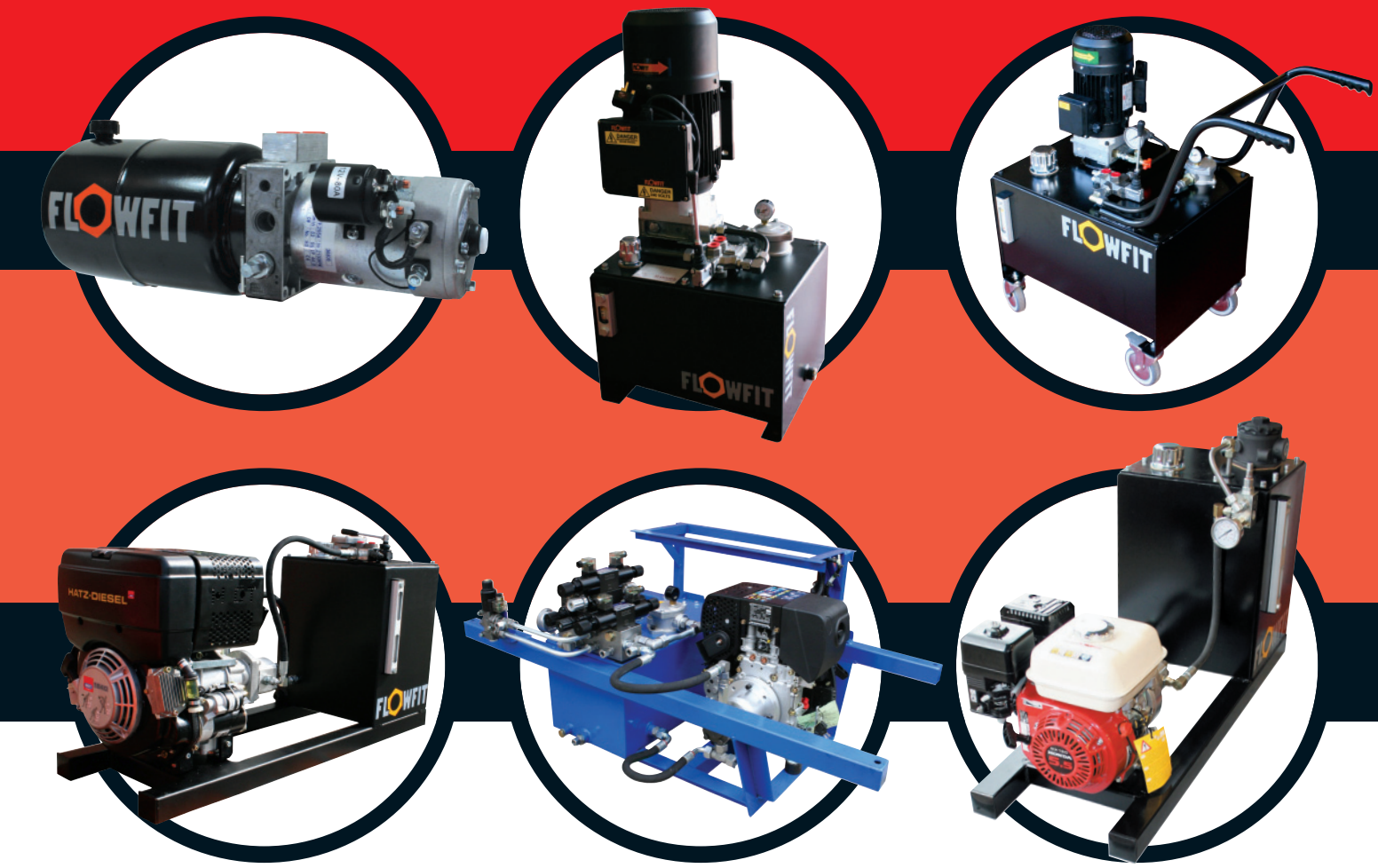

LONCIN HATZ DIESEL FLOWFIT BUCHER HYDRAULICS POWERED by HONDA™

SERIES UP100 HYDRAULIC POWER PACKS

A full range of Flowfit powerunits built to order and held in stock at our warehouse ready for you to collect, all units available in DC and AC combinations.

These units feature a high degree of accuracy and have a wide application range. Bucher Hydraulics power packs are designed according an integrated modular system of valves for the various functions.

This highlights the equipment's compact nature, the foundation of its high performance level.

The basic components of the power packs are:
- a manifold block with cavities for various types of valves
- a very quiet, high-efficiency gear pump
- an electric motor (DC or AC)
- a reservoir (plastic or steel)
- several optional accessories

FLOWFIT
FREE SYSTEM EVALUATION
Send us your requirements and we do the rest

Advantages
- Compact and mod ular construction, limited number of components, quick and easy assembly
- Maximum flexibility – numerous different circuits can be built from just the few basic versions
- Valve cavities conform to international standards
- Optimisation of motor-pump unit prod uce increased efficiency and low operating noise level

FLOWFIT
24 HOUR DELIVERY

	UP50	UP100
cm3/rev	0.25 - 2.3	1.2 - 10.0
bar	230	230
kw	0.35 - 2.0	0.8 - 2.0
kw	0.40 - 2.5	1.2 - 3.0
kw	2.0	2.0
kw	0.12 - 0.75	0.25 - 4.0
litre	0.5 - 4.0	1.5 - 18.0

Applications
- Car lifters
- Lift trucks
- Scissor lifts
- Medical equipment
- Tailift applications
- Lifting platforms
- Equipments for disabled needs
- Automation: opening/closing of swing doors, tailgates, safety locking systems, etc.

TYPICAL LAYOUT OF UP100 POWERUNIT

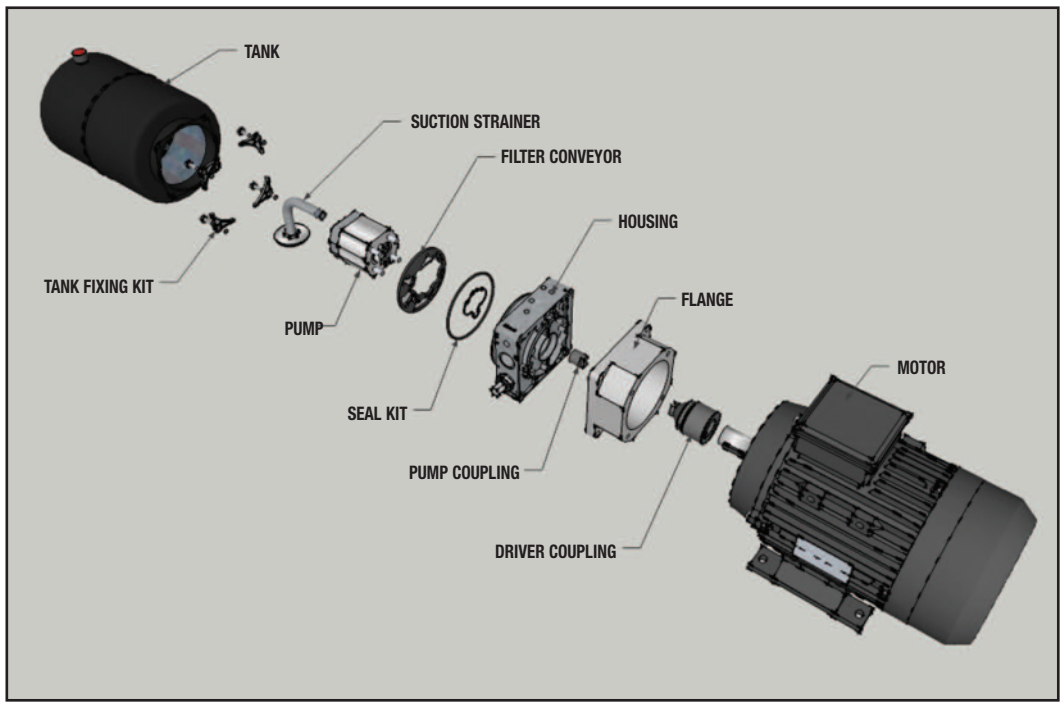

50% OFF ALL PRICES

UP100 POWERUNIT BUILD YOUR OWN

FLOWFIT

BUCHER HYDRAULICS

The UP100 series of standard power packs is based on a range of 12vdc, 24vdc, 48vdc, 240v 1 phase and 415v 3 phase motors from 0.37kw to 5.5kw.
Supplied fully assembled and tested, these units offer pressures up to 210 bar and flows up to 17lpm.
All components in stock ready to assemble for immediate delivery.
A wide range of Compact Industrial hydraulic power packs where space is at a premium.

Applications
Automation:
opening/closing of swing doors
Barrier controls
Car lifters
Demountables
Equipments for disabled needs
Lift trucks
Lifting platforms
Machine tools
Medical equipments

All UP100 assembled powerunits come complete as standard with the following components.

- Electric motor DC/AC
- Bucher gear pump.
- Bucher central housing.
- Main relief valve
- Check valve
- Drive coupling
- Motor flange
- Suction Filter 216 micron
- Return filter conveyor 150 micron

TO GENERATE YOUR FULL ORDER NUMBER SELECT THE COSTING CODE OR EACH COMPONENT

STEP 1

COSTING CODE 12VDC UNIT	FLOW L/MIN	MAX P BAR	MOTOR SIZE KW	MOTOR TYPE	PRICE
12V12	3.7	200	1.7	12VDC	£873.89
12V17	4.9	175	1.7	12VDC	£873.89
12V25	5	150	1.7	12VDC	£873.89
12V35	9.5	100	1.7	12VDC	£873.89
12V43	12	75	1.7	12VDC	£873.89
12V5	13	75	1.7	12VDC	£873.89
12V65	17	50	1.7	12VDC	£873.89
12V8	25	22	1.7	12VDC	£873.89

COSTING CODE 24VDC UNIT	FLOW L/MIN	MAX P BAR	MOTOR SIZE KW	MOTOR TYPE	PRICE
24V12	3.5	200	2.2	24VDC	£899.12
24V17	4.25	200	2.2	24VDC	£899.12
24V25	6	200	2.2	24VDC	£899.12
24V35	7.5	175	2.2	24VDC	£899.12
24V43	8	150	2.2	24VDC	£899.12
24V5	9	125	2.2	24VDC	£899.12
24V65	12.5	100	2.2	24VDC	£899.12
24V8	16	75	2.2	24VDC	£899.12

COSTING CODE AC UNIT	FLOW L/MIN	MAX P BAR	MOTOR SIZE KW	PRICE 240V/AC	PRICE 415V/AC
AC1	1.68	100	0.37	£576.38	£608.63
AC2	1.68	160	0.55	£627.33	£634.13
AC3	1.68	210	0.75	£644.83	£646.88
AC4	2.38	75	0.37	£576.38	£608.63
AC5	2.38	110	0.55	£627.33	£634.13
AC6	2.38	155	0.75	£644.83	£646.88
AC7	2.38	210	1.1	£705.33	£701.57
AC8	3.5	100	0.75	£644.83	£646.87
AC9	3.5	150	1.1	£705.33	£701.57
AC10	3.5	210	1.5	£765.84	£841.87
AC11	4.9	75	0.75	£988.27	£634.13
AC12	4.9	110	1.1	£703.74	£701.57
AC13	4.9	150	1.5	£765.84	£847.12
AC14	4.9	210	2.2	£877.29	£787.21
AC15	6	90	1.1	£703.74	£701.57
AC16	6	120	1.5	£765.84	£847.12
AC17	6	180	2.2	£877.30	£787.21
AC18	6	210	3	£953.72	£847.12
AC19	7	75	1.1	£703.74	£701.57
AC20	7	100	1.5	£765.84	£847.12
AC21	7	150	2.2	£877.52	£787.21
AC22	7	210	3	£1,010.94	£847.12
AC23	9	80	1.5	£765.84	£847.12
AC24	9	120	2.2	£877.52	£787.21
AC25	9	165	3	£953.70	£847.12
AC26	9	190	4	N/A	£923.89
AC27	11	65	1.5	£765.84	£847.12
AC28	11	100	2.2	£877.30	£787.21
AC29	11	130	3	£952.58	£847.12
AC30	11	180	4	N/A	£923.89
AC31	14	75	2.2	£877.30	£787.21
AC32	14	100	3	£953.72	£847.12
AC33	14	145	4	N/A	£923.89

EXAMPLE

STEP 1

SELECT MOTOR

EG:
AC1
£608.63

CONTINUED ON NEXT PAGE

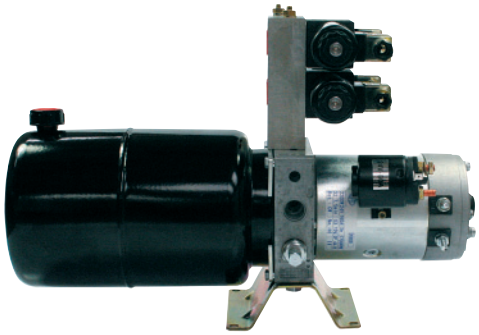

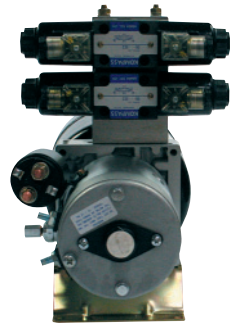

STEP 2

COSTING CODE	MOTOR VOLTAGE	PRICE
3PH	Three phase 415v	£0.00
1PH	One phase 240v	£0.00
1PH110V	One phase 110v	POA
3PH110V	Three phase 110v	POA
PD	Pulley driven c/w 100mm pullley	£278.79
XXX	Not required	£0.00

K1 - TYPICAL CIRCUIT

PRESSURE AND TANK RETURN HYDRAULIC CIRCUIT.

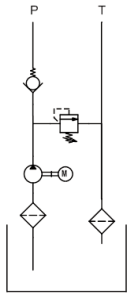

K3 - TYPICAL CIRCUIT

AC AND DC SINGLE ACTING SOLENOID OPERATED HYDRAULIC CIRCUIT.

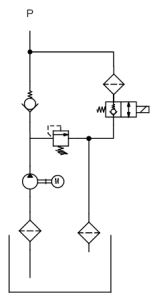

K4 - TYPICAL CIRCUIT

AC DOUBLE ACTING SOLENOID HYDRAULIC CIRCUIT.

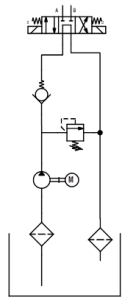

STEP 3

COSTING CODE	CIRCUITS AVAILABLE		PRICE
K1	Single acting circuit	K1 Circuit	£0.00
K3	Double acting circuit.	K3 Circuit	£0.00
K3	P and T ports only circuit.	K3 Circuit	£0.00
K3	Cetop valve circuits	K3 Circuit	£0.00
K4	Lever valve circuits.	K4 Circuit	£0.00

STEP 4

COSTING CODE	MANIFOLDS AVAILABLE	PRICE
31	1 station cetop 3 manifold	£78.33
32	2 station cetop 3 manifold	£154.89
33	3 station cetop 3 manifold	£235.07
XXX	Not required	£0.00

STEP 5

COSTING CODE	MANIFOLD NEEDED	PRICE
42	4210	£131.20
XXX	Not required	£0.00

If using 10 litre reservoir or larger complete with 1-3 station cetop 3 manifold then you need the above manifold. If using 8 litre or smaller reservoir this manifold above is not needed.

STEP 6

COSTING CODE	SOLENOID VALVES	PRICE
NG6D	NG6 D/ACTING VALVE AC/DC ANY SPOOL	£173.00
NG6S	NG6 S/ACTING VALVE AC/DC ANY SPOOL	£123.90
NOV	NORMALLY OPEN SINGLE ACTING AC/DC	£138.49
NCV	NORMALLY CLOSED SINGLE ACTING AC/DC	£178.56
XX	Not required	£0.00

STEP 7

COSTING CODE	MANUAL VALVES	PRICE
HD105	1 bank single acting lever valve 3 pos spring return.	£222.31
HD106	1 bank double acting lever valve 3 pos spring return	£300.66
HDS11/2	2 bank double acting lever valve 3 pos spring return	£290.92
HDS11/3	3 bank double acting lever valve 3 pos spring return	£392.28
HDS11/4	4 bank double acting lever valve 3 pos spring return	£497.38
HDS11/5	5 bank double acting lever valve 3 pos spring return	£596.85
HDS11/6	6 bank double acting lever valve 3 pos spring return	£698.21
XXX	Not required	£0.00

STEP 2
SELECT VOLTAGE
EG:
3PH
£0.00

STEP 3
SELECT CIRCUIT
EG:
K3
£0.00

STEP 4
SELECT MANIFOLD
EG:
32
£154.80

STEP 5
SELECT MANIFOLD
EG:
42
£131.12

STEP 6
SELECT SOLENOID VALVES
EG:
NG6D + NG6D
£173.00+£173.00

STEP 7
SELECT MANUAL VALVES
EG:
XXX
£0.00

CONTINUED ON NEXT PAGE

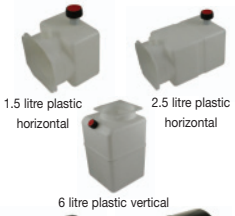

COSTING CODE	RESERVOIRS	PRICE
1.5PH	1.5litre plastic horizontal.	£54.97
2.5PH	2.5litre plastic horizontal.	£58.32
3.5PH	3.5litre plastic horizontal.	£63.78
6PH	6 litre plastic horizontal.	£67.42
5H	5 litre steel horizontal.	£102.04
5V	5 litre steel vertical.	£102.04
8H	8 litre steel horizontal.	£107.52
8V	8 litre steel vertical.	£107.52
10H	10 litre steel horizontal.	£169.45
12V	12 litre steel vertical.	£204.07
15V	15 litre steel vertical.	£244.17
18H	18 litre steel horizontal	£247.82
20V	20 litre steel vertical	£225.95
30V	30 litre steel vertical.	£291.55
55V	55 litre steel vertical	£373.54
75V	72 litre steel vertical.	£422.76
100V	98 litre steel vertical	£499.29
180V	160 litre steel vertical.	£652.37
xxx	No tank required,neck and flange	£16.41

STEP 8
SELECT RESERVOIR

EG:
8H
£107.52

Pressure Gauges

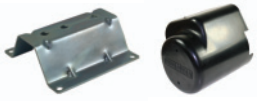

COSTING CODE	ADD ON EXTRAS	PRICE
PG1	PRESSURE GAUGE 0-1000PSI PLUS ISOLATOR	£35.55
PG2	PRESSURE GAUGE 0-2000PSI PLUS ISOLATOR	£35.55
PG3	PRESSURE GAUGE 0-3000PSI PLUS ISOLATOR	£35.55
PG4	PRESSURE GAUGE 0-4000PSI PLUS ISOLATOR	£35.55
SMB	Steel mounting bracket for fitting to central housing.	£17.31
DCM	Plastic motor cover for DC motors.	£35.55
XXX	Not required	£0.00
PLUG	13 Amp plug c/w 2 metre cable	£51.09

STEP 9
SELECT EXTRAS

EG:
PG1
£35.55

COSTING CODE	ADD ON EXTRAS	PRICE
EHP	Emergency handpump 1.5cc/rev fitted to housing K1 + K4	£71.06
EHP1	Emergency handpump 1.5cc/rev fitted to housing K3	£134.83
XXX	Not required	£0.00

ALL POWER PACKS ARE FULLY ASSEMBLED AND TESTED. ISSUED WITH 12 MONTHS WARRANTY FROM INVOICE DATE

COSTING CODE	AC RANGE AIR BLOWN OIL COOLER	PRICE
COOLER	AC range air blown oil cooler	Dependent on application

FULL ORDER NUMBER FOR EXAMPLE SHOWN
AC1-3PH-K3-32 NG6D-NG6D-XXX-8H-PG1

TOTAL COST OF EXAMPLE SHOWN
£1383.64

★★ PRICE PROMISE ★★

Need more equipment on your power unit. Just select the items you need from our catalogue, add them to your powerpack and take off the relevant discount to arrive at your nett price.

APPLICATIONS:
- Mobile stationary equipment
- Safety Locking systems
- Scissor lifts
- Snowploughs
- Tippers
- Truck cranes
- Truck tailgate lifts
- Tyre removal machines
- Wood working machines

BENEFITS:
- Compact and modular construction, limited number of components, quick and easy assembly
- Maximum flexibility – numerous different circuits can be built from just the few basic versions
- Valve cavities conform to international standards
- Optimisation of motor-pump unit has produced increased efficiency and low operating noise level

BUCHER HYDRAULICS

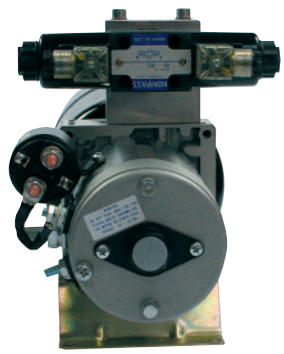

P+T CIRCUIT

IDEAL IF ALL YOU NEED IS FLOW/PRESSURE WITH TANK RETURN

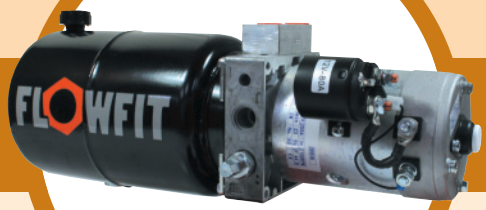

PRESSURE AND TANK RETURN HYDRAULIC CIRCUIT.

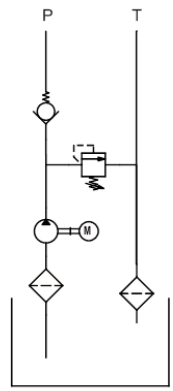

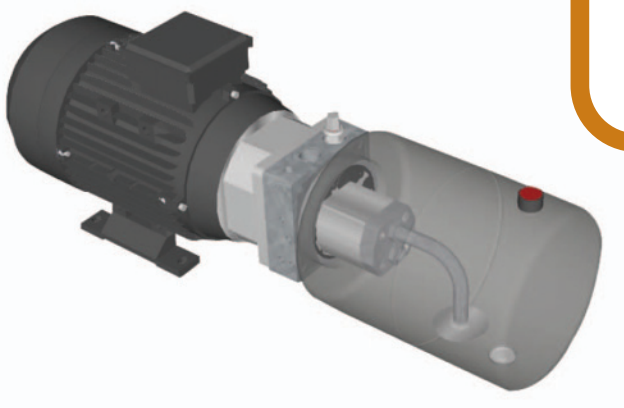

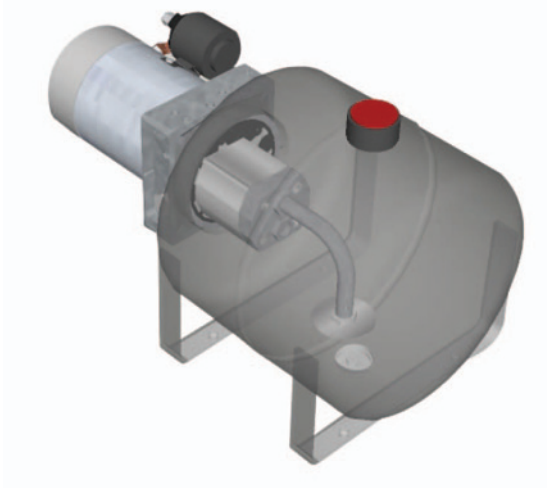

12VDC	P + T PORTS ONLY					
PT NO	KW	FLOW L/MIN	MAX P BAR	RESERVOIR SIZE LITRE	MOTOR TYPE	LIST PRICE
ZZ001469	1.7	3.7	200	5 litre horizontal	12VDC	£865.47
ZZ001470	1.7	3.7	200	8 litre horizontal	12VDC	£877.49
ZZ001471	1.7	4.9	175	8 litre horizontal	12VDC	£877.49
ZZ001472	1.7	4.9	175	10 litre horizontal	12VDC	£926.77
ZZ001473	1.7	9.5	100	15 litre vertical	12VDC	£1007.31
ZZ001474	1.7	9.5	100	18 litre horizontal	12VDC	£1015.72

24VDC	P + T PORTS ONLY					
PT NO	KW	FLOW L/MIN	MAX P BAR	RESERVOIR SIZE LITRE	MOTOR TYPE	LIST PRICE
ZZ001475	2.2	3.5	200	5 litre horizontal	24VDC	£865.47
ZZ001476	2.2	3.5	200	8 litre horizontal	24VDC	£877.49
ZZ001477	2.2	4.25	200	8 litre horizontal	24VDC	£877.49
ZZ001478	2.2	4.25	200	10 litre horizontal	24VDC	£927.33
ZZ001479	2.2	7.5	175	15 litre vertical	24VDC	£1007.31
ZZ001480	2.2	7.5	175	18 litre horizontal	24VDC	£1015.72

110VAC	50HZ 1 PHASE P + T PORTS ONLY						
PT NO	KW	HP	FLOW L/MIN	MAX P BAR	RESERVOIR SIZE LITRE	MOTOR TYPE	LIST PRICE
ZZ001481	0.75	1	1.68	210	5 litre horizontal	110VAC	£857.05
ZZ001482	1.1	1.5	2.38	210	5 litre horizontal	110VAC	£943.60
ZZ001483	1.5	2	3.5	210	8 litre horizontal	110VAC	£960.43
ZZ001484	2.2	3	4.9	210	8 litre horizontal	110VAC	£1212.86
ZZ001485	3	4	6	210	10 litre horizontal	110VAC	£1387.16

240VAC	50HZ 1 PHASE P + T PORTS ONLY						
PT NO	KW	HP	FLOW L/MIN	MAX P BAR	RESERVOIR SIZE LITRE	MOTOR TYPE	LIST PRICE
ZZ001486	0.75	1	1.68	210	5 litre horizontal	240VAC	£786.14
ZZ001487	1.1	1.5	2.38	210	5 litre horizontal	240VAC	£855.85
ZZ001488	1.5	2	3.5	210	8 litre horizontal	240VAC	£941.20
ZZ001489	2.2	3	4.9	210	8 litre horizontal	240VAC	£1139.53
ZZ001490	3	4	6	210	10 litre horizontal	240VAC	£1223.67

415VAC	50HZ 3 PHASE P + T PORTS ONLY						
PT NO	KW	HP	FLOW L/MIN	MAX P BAR	RESERVOIR SIZE LITRE	MOTOR TYPE	LIST PRICE
ZZ001491	0.75	1	1.68	210	5 litre horizontal	415VAC	£662.32
ZZ001492	1.1	1.5	2.38	210	5 litre horizontal	415VAC	£698.38
ZZ001493	1.5	2	3.5	210	8 litre horizontal	415VAC	£751.28
ZZ001494	2.2	3	4.9	210	8 litre horizontal	415VAC	£798.16
ZZ001495	3	4	6	210	10 litre horizontal	415VAC	£955.62
ZZ001496	4	5.3	9.7	210	15 litre horizontal	415VAC	£1120.30

PETROL	Loncin			P + T PORTS ONLY					
PT NO	ENGINE TYPE	KW 3600 RPM	HP 3600 RPM	FLOW RATE + MAX PSI	ENGINE START	PUMP TYPE	OIL ALERT YES/NO	DIMENSION L X W XH (MM)	LIST PRICE
ZZ001624	Loncin	4.8	6.5	11.5 L/MIN @ 2900 PSI/200 BAR	Pull	Gear	yes	1015 x 385 x 600	£2043.47
ZZ001625	Loncin	6.7	9	15.8 L/MIN @ 2900 PSI/200 BAR	Pull	Gear	yes	1015 x 385 x 600	£2259.84
ZZ001626	Loncin	9.6	13	24 L/MIN @ 2900 PSI/200 BAR	Pull	Gear	yes	1015 x 385 x 600	£2343.98

DIESEL	HATZ			P + T PORTS ONLY					
PT NO	ENGINE TYPE	KW 3000 RPM	HP 3000 RPM	FLOW RATE + MAX PSI	ENGINE START	PUMP TYPE	OIL ALERT YES/NO	DIMENSION L X W XH (MM)	LIST PRICE
ZZ001422	Hatz	7.4	10	18 L/MIN @ 2900 PSI/200 BAR	Electric start Manual stop	Gear	yes	1015 x 385 x 600	£5,288.98
ZZ001627	Hatz	14.7	19.7	36 L/MIN @ 2900 PSI/200 BAR	Electric start Manual stop	Gear	yes	1015 X 385 X 600	£9,616.32

BELT DRIVEN	P + T PORTS ONLY				
PT NO	PUMP FLOW AT 1000 L/MIN	PUMP FLOW AT 3600RPM	MAX P BAR	RESERVOIR SIZE LITRE	LIST PRICE
ZZ001621	1.2	4.3	210	8 Horizontal	£720.03
ZZ001622	2.5	9	210	15 Horizontal	£849.84
ZZ001623	3.5	12.6	210	18 Horizontal	£873.89

Higher flows and larger electric motors and engines available upon request please contact the sales team.

For all Powerpack dimensions see pages 27 – 34

SINGLE ACTING CIRCUIT

IDEAL FOR OPERATING A SINGLE ACTING CYLINDER

AC MANUAL SINGLE ACTING HYDRAULIC CIRCUIT .

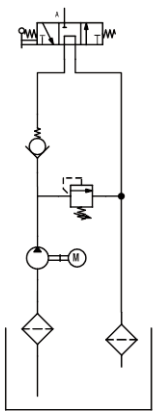

DC MANUAL SINGLE ACTING HYDRAULIC CIRCUIT .

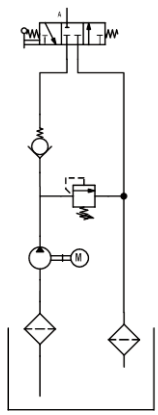

AC AND DC SINGLE ACTING SOLENOID OPERATED HYDRAULIC CIRCUIT.

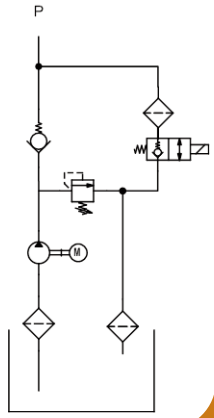

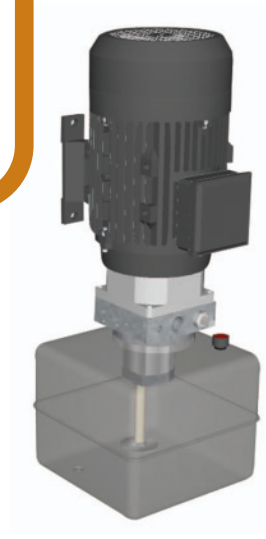

SINGLE ACTING HYDRAULIC POWERUNIT PACKAGE

FLOWFIT

TO OPERATE A SINGLE ACTING CYLINDER ON ANY TRAILER OR TIPPER APPLICATIONS COMPLETE WITH TWO BUTTON PENDENT

12VDC

- 12vdc powerunit.
- 2.1cc/rev gear pump.
- 1.6kw 12vdc electric motor c/w relay and plastic motor cover.
- 4.3 litre reservoir c/w drain plug.
- Reservoir c/w suction strainer, return oil conveyor and filler breather
- Horizontal mounting Max pressure 220 bar.
- Max flow 4 l/min at 220 bar.
- Main relief valve adjustable from 50 - 220 bar.
- 12vdc let down valve, relief and P line check.
- Suitable for all single acting applications.
- 2 Button pendent on a 4 metre lead.

AC AND DC SINGLE ACTING SOLENOID OPERATED HYDRAULIC CIRCUIT.

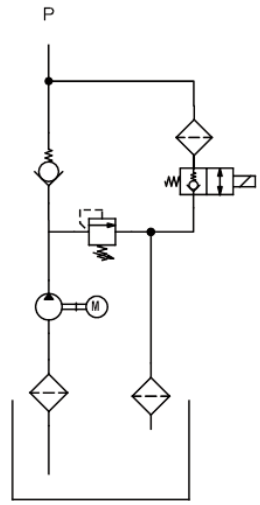

PT NO	FLOW L/MIN	MAX P BAR	MOTOR SIZE KW	MOTOR TYPE	LIST PRICE
ZZ001974	4	220	1.6	12VDC	£265.00

24VDC

- 24vdc powerunit.
- 2.1cc/rev gear pump.
- 2kw 24vdc electric motor c/w relay and plastic motor cover.
- 4.3 litre reservoir c/w drain plug.
- Reservoir c/w suction strainer, return oil conveyor and filler breather
- Horizontal mounting Max pressure 220 bar.
- Max flow 4 l/min at 220 bar.
- Main relief valve adjustable from 50 - 220 bar.
- 24vdc let down valve, relief and P line check.
- Suitable for all single acting applications.
- 2 Button pendent on a 4 metre lead.

AC AND DC SINGLE ACTING SOLENOID OPERATED HYDRAULIC CIRCUIT.

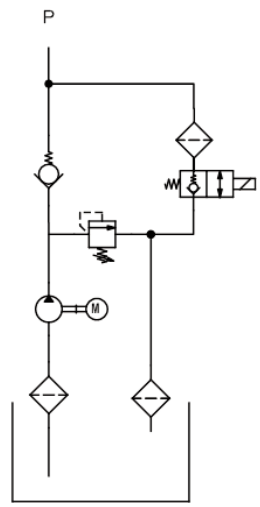

PT NO	FLOW L/MIN	MAX P BAR	MOTOR SIZE KW	MOTOR TYPE	LIST PRICE
ZZ001648	4	220	2	24VDC	£265.00

12VDC		SINGLE ACTING SOLENOID OPERATED				
PT NO	KW	FLOW L/MIN	MAX P BAR	RESERVOIR SIZE LITRE	MOTOR TYPE	LIST PRICE
ZZ001497	1.7	3.7	200	5 litre horizontal	12VDC	£894.73
ZZ001498	1.7	3.7	200	8 litre horizontal	12VDC	£906.07
ZZ001499	1.7	4.9	175	8 litre horizontal	12VDC	£908.33
ZZ001500	1.7	4.9	175	10 litre horizontal	12VDC	£961.63
ZZ001501	1.7	9.5	100	15 litre vertical	12VDC	£1028.54
ZZ001502	1.7	9.5	100	18 litre horizontal	12VDC	£1051.22

12VDC		SINGLE ACTING MANUAL LEVER OPERATED				
PT NO	KW	FLOW L/MIN	MAX P BAR	RESERVOIR SIZE LITRE	MOTOR TYPE	LIST PRICE
ZZ001503	1.7	3.7	200	5 litre horizontal	12VDC	£1029.67
ZZ001504	1.7	3.7	200	8 litre horizontal	12VDC	£1041.01
ZZ001505	1.7	4.9	175	8 litre horizontal	12VDC	£1043.28
ZZ001506	1.7	4.9	175	10 litre horizontal	12VDC	£1096.58
ZZ001507	1.7	9.5	100	15 litre vertical	12VDC	£1164.62
ZZ001508	1.7	9.5	100	18 litre horizontal	12VDC	£1187.30

24VDC		SINGLE ACTING SOLENOID OPERATED				
PT NO	KW	FLOW L/MIN	MAX P BAR	RESERVOIR SIZE LITRE	MOTOR TYPE	LIST PRICE
ZZ001509	2.2	3.5	200	5 litre horizontal	24VDC	£897.00
ZZ001510	2.2	3.5	200	8 litre horizontal	24VDC	£909.47
ZZ001511	2.2	4.25	200	8 litre horizontal	24VDC	£911.74
ZZ001512	2.2	4.25	200	10 litre horizontal	24VDC	£963.90
ZZ001513	2.2	7.5	175	15 litre vertical	24VDC	£1036.48
ZZ001514	2.2	7.5	175	18 litre horizontal	24VDC	£1059.16

24VDC		24VDC SINGLE ACTING MANUAL LEVER OPERATED				
PT NO	KW	FLOW L/MIN	MAX P BAR	RESERVOIR SIZE LITRE	MOTOR TYPE	LIST PRICE
ZZ001515	2.2	3.5	200	5 litre horizontal	24VDC	£1032.00
ZZ001516	2.2	3.5	200	8 litre horizontal	24VDC	£1043.28
ZZ001517	2.2	4.25	200	8 litre horizontal	24VDC	£1043.28
ZZ001518	2.2	4.25	200	10 litre horizontal	24VDC	£1097.71
ZZ001519	2.2	7.5	175	15 litre vertical	24VDC	£1164.62
ZZ001523	2.2	7.5	175	18 litre horizontal	24VDC	£1187.30

110VAC			50HZ 1 PHASE SINGLE ACTING SOLENOID OPERATED				
PT NO	KW	HP	FLOW L/MIN	MAX P BAR	RESERVOIR SIZE LITRE	MOTOR TYPE	LIST PRICE
ZZ001524	0.75	1	1.68	210	5 litre horizontal	110VAC	£870.91
ZZ001525	1.1	1.5	2.38	210	5 litre horizontal	110VAC	£1009.26
ZZ001526	1.5	2	3.5	210	8 litre horizontal	110VAC	£1050.08
ZZ001527	2.2	3	4.9	210	8 litre horizontal	110VAC	£1177.09
ZZ001528	3	4	6	210	10 litre horizontal	110VAC	£1317.71

110VAC			50HZ 1 PHASE SINGLE ACTING MANUAL LEVER OPERATED				
PT NO	KW	HP	FLOW L/MIN	MAX P BAR	RESERVOIR SIZE LITRE	MOTOR TYPE	LIST PRICE
ZZ001529	0.75	1	1.68	210	5 litre horizontal	110VAC	£971.84
ZZ001530	1.1	1.5	2.38	210	5 litre horizontal	110VAC	£1052.35
ZZ001531	1.5	2	3.5	210	8 litre horizontal	110VAC	£1139.67
ZZ001532	2.2	3	4.9	210	8 litre horizontal	110VAC	£1299.56
ZZ001533	3	4	6	210	10 litre horizontal	110VAC	£1403.89

240VAC			50HZ 1 PHASE SINGLE ACTING SOLENOID OPERATED				
PT NO	KW	HP	FLOW L/MIN	MAX P BAR	RESERVOIR SIZE LITRE	MOTOR TYPE	LIST PRICE
ZZ001534	0.75	1	1.68	210	5 litre horizontal	240VAC	£804.01
ZZ001535	1.1	1.5	2.38	210	5 litre horizontal	240VAC	£868.64
ZZ001536	1.5	2	3.5	210	8 litre horizontal	240VAC	£1050.08
ZZ001537	2.2	3	4.9	210	8 litre horizontal	240VAC	£1136.27
ZZ001538	3	4	6	210	10 litre horizontal	240VAC	£1162.35

50% OFF ALL PRICES

240VAC	50HZ 1 PHASE SINGLE ACTING MANUAL LEVER OPERATED						
PT NO	KW	HP	FLOW L/MIN	MAX P BAR	RESERVOIR SIZE LITRE	MOTOR TYPE	LIST PRICE
ZZ001539	0.75	1	1.68	210	5 litre horizontal	240VAC	£959.23
ZZ001540	1.1	1.5	2.38	210	5 litre horizontal	240VAC	£1028.94
ZZ001541	1.5	2	3.5	210	8 litre horizontal	240VAC	£1101.06
ZZ001542	2.2	3	4.9	210	8 litre horizontal	240VAC	£1301.81
ZZ001543	3	4	6	210	10 litre horizontal	240VAC	£1324.65

415VAC	50HZ 3 PHASE SINGLE ACTING SOLENOID OPERATED						
PT NO	KW	HP	FLOW L/MIN	MAX P BAR	RESERVOIR SIZE LITRE	MOTOR TYPE	LIST PRICE
ZZ001544	0.75	1	1.68	210	5 litre horizontal	415VAC	£756.09
ZZ001545	1.1	1.5	2.38	210	5 litre horizontal	415VAC	£784.93
ZZ001546	1.5	2	3.5	210	8 litre horizontal	415VAC	£837.82
ZZ001547	2.2	3	4.9	210	8 litre horizontal	415VAC	£883.50
ZZ001548	3	4	6	210	10 litre horizontal	415VAC	£965.24
ZZ002674	1.1	1.5	6.48	210	12 litre vertical	415 VAC	£913.55
ZZ001549	4	5.3	9.7	210	15 litre vertical	415VAC	£1080.64

415VAC	50HZ 3 PHASE SINGLE ACTING MANUAL LEVER OPERATED						
PT NO	KW	HP	FLOW L/MIN	MAX P BAR	RESERVOIR SIZE LITRE	MOTOR TYPE	LIST PRICE
ZZ001550	0.75	1	1.68	210	5 Horizontal	415VAC	£843.83
ZZ001551	1.1	1.5	2.38	210	5 Horizontal	415VAC	£871.48
ZZ001552	1.5	2	3.5	210	8 Horizontal	415VAC	£911.14
ZZ001553	2.2	3	4.9	210	8 Horizontal	415VAC	£959.23
ZZ001554	3	4	6	210	10 Horizontal	415VAC	£1057.80
ZZ001555	4	5.3	9.7	210	15 Vertical	415VAC	£1152.76

PETROL	Loncin	SINGLE ACTING POWERUNIT						
PT NO	ENGINE TYPE	KW 3600 RPM	HP 3600 RPM	FLOW RATE + MAX PSI	ENGINE START	PUMP TYPE	OIL ALERT YES/NO	DIMENSION L X W XH (MM)	LIST PRICE
ZZ001362	Loncin	4.8	6.5	11.5 L/MIN @ 2900 PSI/200 BAR	Pull	Gear	yes	1015 x 385 x 600	£2043.47
ZZ001363	Loncin	6.7	9	15.8 L/MIN @ 2900 PSI/200 BAR	Pull	Gear	yes	1015 x 385 x 600	£2259.84
ZZ001364	Loncin	9.6	13	24 L/MIN @ 2900 PSI/200 BAR	Pull	Gear	yes	1015 x 385 x 600	£2343.98

DIESEL	HATZ	SINGLE ACTING POWERUNIT							
PT NO	ENGINE TYPE	KW 3000 RPM	HP 3000 RPM	FLOW RATE + MAX PSI	ENGINE START	PUMP TYPE	OIL ALERT YES/NO	DIMENSION L X W XH (MM)	LIST PRICE
ZZ001422	Hatz	7.4	10	18 L/MIN @ 2900 PSI/200 BAR	Electric start Manual stop	Gear	yes	1015 x 385 x 600	£5288.98
ZZ001628	Hatz	14.7	19.7	36 L/MIN @ 2900 PSI/200 BAR	Electric start Manual stop	Gear	yes	1015 X 385 X 600	£9616.32

BELT DRIVEN	SINGLE ACTING POWERUNIT SOLENOID RELEASE				
PT NO	PUMP FLOW AT 1000RPM L/MIN	PUMP FLOW AT 3600RPM	MAX P BAR	RESERVOIR SIZE LITRE	LIST PRICE
ZZ001630	1.2	4.3	210	8 Horizontal	£884.70
ZZ001631	2.5	9	210	15 Vertical	£1014.53
ZZ001632	3.5	12.6	210	18 Horizontal	£1040.96

BELT DRIVEN	SINGLE ACTING POWERUNIT MANUAL LEVER RELEASE				
PT NO	PUMP FLOW AT 1000RPM L/MIN	PUMP FLOW AT 3600RPM	MAX P BAR	RESERVOIR SIZE LITRE	LIST PRICE
ZZ001634	1.2	4.3	210	8 Horizontal	£905.13
ZZ001635	2.5	9	210	15 Vertical	£1031.35
ZZ001636	3.5	12.6	210	18 Horizontal	£1043.37

Higher flows and larger electric motors and engines available upon request please contact the sales team.

For all Powerpack dimensions see pages 27 – 34

DOUBLE ACTING CIRCUIT

IDEAL FOR OPERATING A DOUBLE ACTING CIRCUIT, OR A HYDRAULIC MOTOR.

AC DOUBLE ACTING SOLENOID HYDRAULIC CIRCUIT.

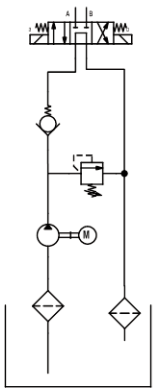

DC MANUAL DOUBLE ACTING HYDRAULIC CIRCUIT.

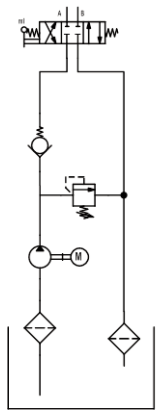

DC DOUBLE ACTING SOLENOID HYDRAULIC CIRCUIT.

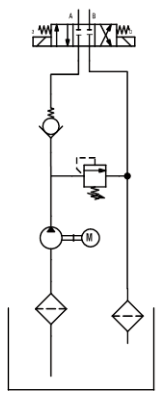

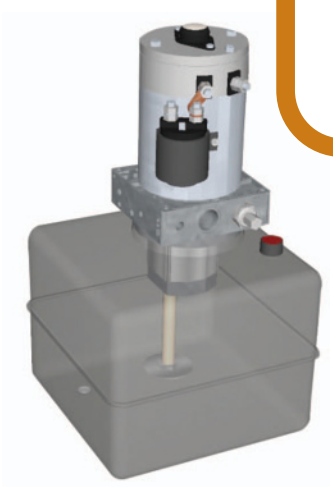

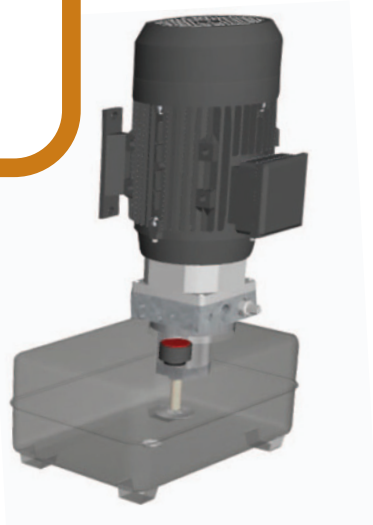

12VDC	DOUBLE ACTING SOLENOID OPERATED					
PT NO	KW	FLOW L/MIN	MAX P BAR	RESERVOIR SIZE LITRE	MOTOR TYPE	LIST PRICE
ZZ001556	1.7	3.7	200	5 litre horizontal	12VDC	£1081.84
ZZ001557	1.7	3.7	200	8 litre horizontal	12VDC	£1208.05
ZZ001558	1.7	4.9	175	8 litre horizontal	12VDC	£1210.46
ZZ001559	1.7	4.9	175	10 litre horizontal	12VDC	£1264.55
ZZ001560	1.7	9.5	100	15 litre vertical	12VDC	£1335.46
ZZ001561	1.7	9.5	100	18 litre horizontal	12VDC	£1355.90

12VDC	DOUBLE ACTING MANUAL LEVER OPERATED					
PT NO	KW	FLOW L/MIN	MAX P BAR	RESERVOIR SIZE LITRE	MOTOR TYPE	LIST PRICE
ZZ001562	1.7	3.7	200	5 litre horizontal	12VDC	£1091.45
ZZ001563	1.7	3.7	200	8 litre horizontal	12VDC	£1103.47
ZZ001564	1.7	4.9	175	8 litre horizontal	12VDC	£1105.88
ZZ001565	1.7	4.9	175	10 litre horizontal	12VDC	£1161.17
ZZ001566	1.7	9.5	100	15 litre vertical	12VDC	£1232.09
ZZ001567	1.7	9.5	100	18 litre horizontal	12VDC	£1260.94

24VDC	DOUBLE ACTING SOLENOID OPERATED					
PT NO	KW	FLOW L/MIN	MAX P BAR	RESERVOIR SIZE LITRE	MOTOR TYPE	LIST PRICE
ZZ001568	2.2	3.5	200	5 litre horizontal	24VDC	£1103.47
ZZ001569	2.2	3.5	200	8 litre horizontal	24VDC	£1228.49
ZZ001570	2.2	4.25	200	8 litre horizontal	24VDC	£1254.93
ZZ001571	2.2	4.25	200	10 litre horizontal	24VDC	£1291.00
ZZ001572	2.2	7.5	175	15 litre vertical	24VDC	£1355.90
ZZ001573	2.2	7.5	175	18 litre horizontal	24VDC	£1390.76

24VDC	DOUBLE ACTING MANUAL LEVER OPERATED					
PT NO	KW	FLOW L/MIN	MAX P BAR	RESERVOIR SIZE LITRE	MOTOR TYPE	LIST PRICE
ZZ001574	2.2	3.5	200	5 litre horizontal	24VDC	£1092.66
ZZ001575	2.2	3.5	200	8 litre horizontal	24VDC	£1098.67
ZZ001584	2.2	4.25	200	8 litre horizontal	24VDC	£1098.67
ZZ001585	2.2	4.25	200	10 litre horizontal	24VDC	£1159.97
ZZ001586	2.2	7.5	175	15 litre vertical	24VDC	£1234.50
ZZ001587	2.2	7.5	175	18 litre horizontal	24VDC	£1239.30

110VAC	50HZ 1 PHASE DOUBLE ACTING SOLENOID OPERATED						
PT NO	KW	HP	FLOW L/MIN	MAX P BAR	RESERVOIR SIZE LITRE	MOTOR TYPE	LIST PRICE
ZZ001588	0.75	1	1.68	210	5 litre horizontal	110VAC	£1003.70
ZZ001589	1.1	1.5	2.38	210	5 litre horizontal	110VAC	£1089.04
ZZ001590	1.5	2	3.5	210	8 litre horizontal	110VAC	£1191.22
ZZ001591	2.2	3	4.9	210	8 litre horizontal	110VAC	£1336.67
ZZ001592	3	4	6	210	10 litre horizontal	110VAC	£1530.19

110VAC	50HZ 1 PHASE DOUBLE ACTING MANUAL LEVER OPERATED						
PT NO	KW	HP	FLOW L/MIN	MAX P BAR	RESERVOIR SIZE LITRE	MOTOR TYPE	LIST PRICE
ZZ001593	0.75	1	1.68	210	5 litre horizontal	110VAC	£1034.95
ZZ001594	1.1	1.5	2.38	210	5 litre horizontal	110VAC	£1075.71
ZZ001595	1.5	2	3.5	210	8 litre horizontal	110VAC	£1222.48
ZZ001596	2.2	3	4.9	210	8 litre horizontal	110VAC	£1356.81
ZZ001597	3	4	6	210	10 litre horizontal	110VAC	£1580.68

240VAC	240VAC 50HZ 1 PHASE DOUBLE ACTING SOLENOID OPERATED						
PT NO	KW	HP	FLOW L/MIN	MAX P BAR	RESERVOIR SIZE LITRE	MOTOR TYPE	LIST PRICE
ZZ001598	0.75	1	1.68	210	5 litre horizontal	240VAC	£1007.31
ZZ001599	1.1	1.5	2.38	210	5 litre horizontal	240VAC	£1117.90
ZZ001600	1.5	2	3.5	210	8 litre horizontal	240VAC	£1158.77
ZZ001601	2.2	3	4.9	210	8 litre horizontal	240VAC	£1359.50
ZZ001602	3	4	6	210	10 litre horizontal	240VAC	£1602.32

240VAC	50HZ 1 PHASE DOUBLE ACTING MANUAL LEVER OPERATED						
PT NO	KW	HP	FLOW L/MIN	MAX P BAR	RESERVOIR SIZE LITRE	MOTOR TYPE	LIST PRICE
ZZ001603	0.75	1	1.68	210	5 litre horizontal	240VAC	£964.04
ZZ001604	1.1	1.5	2.38	210	5 litre horizontal	240VAC	£1074.63
ZZ001605	1.5	2	3.5	210	8 litre horizontal	240VAC	£1115.04
ZZ001606	2.2	3	4.9	210	8 litre horizontal	240VAC	£1315.04
ZZ001607	3	4	6	210	10 litre horizontal	240VAC	£1408.79

415VAC	50HZ 3 PHASE DOUBLE ACTING SOLENOID OPERATED						
PT NO	KW	HP	FLOW L/MIN	MAX P BAR	RESERVOIR SIZE LITRE	MOTOR TYPE	LIST PRICE
ZZ001608	0.75	1	1.68	210	5 litre horizontal	415VAC	£816.20
ZZ001609	1.1	1.5	2.38	210	5 litre horizontal	415VAC	£1037.95
ZZ001610	1.5	2	3.5	210	8 litre horizontal	415VAC	£895.52
ZZ001611	2.2	3	4.9	210	8 litre horizontal	415VAC	£941.20
ZZ001612	3	4	6	210	10 litre horizontal	415VAC	£1099.87
ZZ002674	1.1	1.5	6.48	210	12 litre horizontal	415VAC	£913.55
ZZ001613	4	5.3	9.7	210	15 litre vertical	415VAC	£1266.95

415VAC	50HZ 3 PHASE DOUBLE ACTING MANUAL LEVER OPERATED						
PT NO	KW	HP	FLOW L/MIN	MAX P BAR	RESERVOIR SIZE LITRE	MOTOR TYPE	LIST PRICE
ZZ001614	0.75	1	1.68	210	5 litre horizontal	415VAC	£847.44
ZZ001615	1.1	1.5	2.38	210	5 litre horizontal	415VAC	£876.29
ZZ001616	1.5	2	3.5	210	8 litre horizontal	415VAC	£885.91
ZZ001617	2.2	3	4.9	210	8 litre horizontal	415VAC	£972.45
ZZ001618	3	4	6	210	10 litre horizontal	415VAC	£1145.54
ZZ001619	4	5.3	9.7	210	15 litre vertical	415VAC	£1356.19

PETROL	DOUBLE ACTING POWERUNIT								
PT NO	ENGINE TYPE	KW 3600 RPM	HP 3600 RPM	FLOW RATE + MAX PSI	ENGINE START	PUMP TYPE	OIL ALERT YES/NO	DIMENSION L X W XH (MM)	LIST PRICE
ZZ001637	Loncin	4.8	6.5	11.5 L/MIN @ 2900 PSI/200 BAR	Pull	Gear	yes	1015 x 385 x 600	£2043.47
ZZ001638	Loncin	6.7	9	15.8 L/MIN @ 2900 PSI/200 BAR	Pull	Gear	yes	1015 x 385 x 600	£2259.84
ZZ001639	Loncin	9.6	13	24 L/MIN @ 2900 PSI/200 BAR	Pull	Gear	yes	1015 x 385 x 600	£2343.98

DIESEL	DOUBLE ACTING POWERUNIT							
PT NO	ENGINE TYPE	KW 3000 RPM	HP 3000 RPM	FLOW RATE + MAX PSI	ENGINE START	PUMP TYPE	OIL ALERT YES/NO	DIMENSION L X W XH (MM)	LIST PRICE
ZZ001422	Hatz	7.4	10	18 L/MIN @ 2900 PSI/200 BAR	Electric start Manual stop	Gear	yes	1015 x 385 x 600	£5,288.98
ZZ001640	Hatz	14.7	19.7	36 L/MIN @ 2900 PSI/200 BAR	Electric start Manual stop	Gear	yes	1015 X 385 X 600	£9,616.32

BELT DRIVEN	DOUBLE ACTING SOLENOID POWERUNIT				
PT NO	PUMP FLOW AT 1000RPM L/MIN	PUMP FLOW AT 3600RPM	MAX P BAR	RESERVOIR SIZE LITRE	LIST PRICE
ZZ001641	1.2	4.3	210	8 Horizontal	£858.26
ZZ001642	2.5	9	210	15 Horizontal	£983.27
ZZ001643	3.5	12.6	210	18 Horizontal	£1000.10

BELT DRIVEN	DOUBLE ACTING MANUAL LEVER POWERUNIT				
PT NO	PUMP FLOW AT 1000RPM L/MIN	PUMP FLOW AT 3600RPM	MAX P BAR	RESERVOIR SIZE LITRE	LIST PRICE
ZZ001644	1.2	4.3	210	8 Horizontal	£903.94
ZZ001645	2.5	9	210	15 horizontal	£1015.72
ZZ001646	3.5	12.6	210	18 Horizontal	£1047.67

Higher flows and larger electric motors and engines available upon request please contact the sales team.

For all Powerpack dimensions see pages 27 – 34

12 Volt DC and 24 Volt DC Power Pack Dimensions

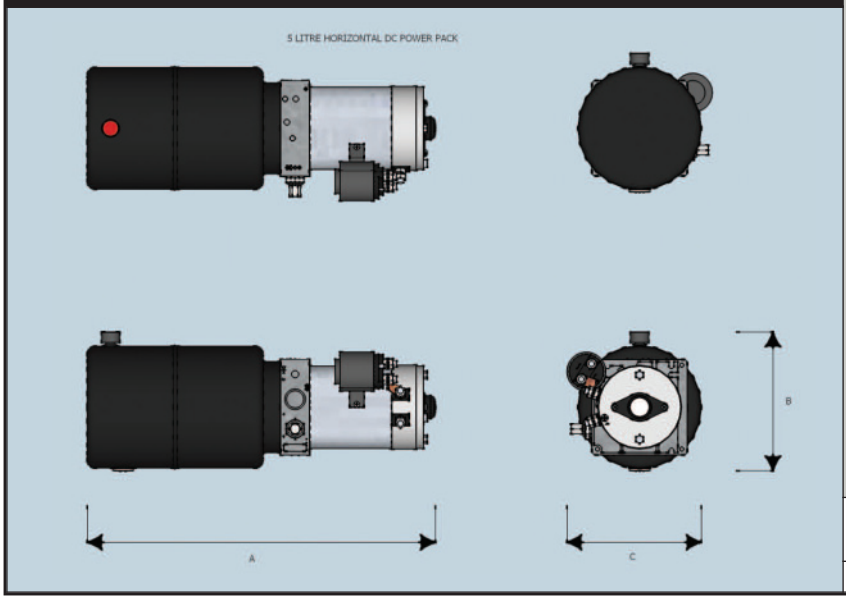

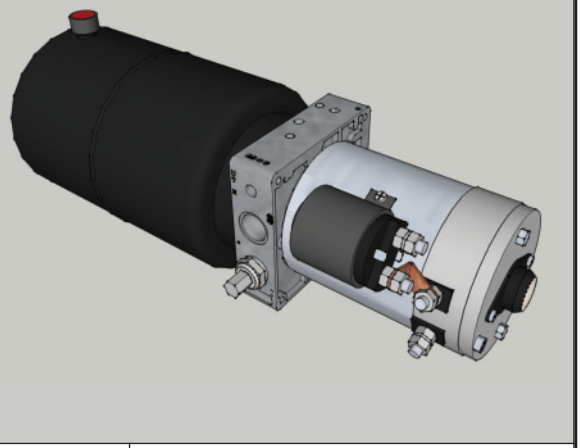

Tank Capacity	5 Litre Horizontal Tank		
	A	B	C
5ltr	489mm	195mm	190mm

12 Volt DC and 24 Volt DC Power Pack Dimensions

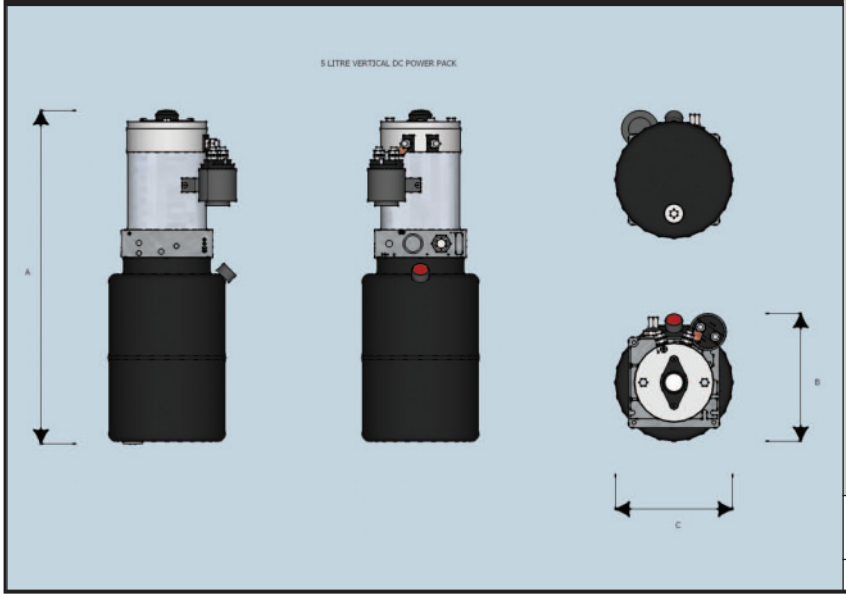

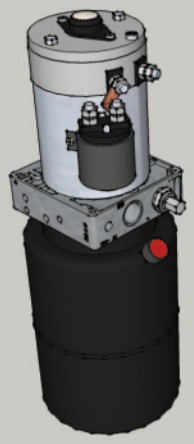

Tank Capacity	5 Litre Vertical Tank		
	A	B	C
5ltr	489mm	188mm	170mm

12 Volt DC and 24 Volt DC Power Pack Dimensions

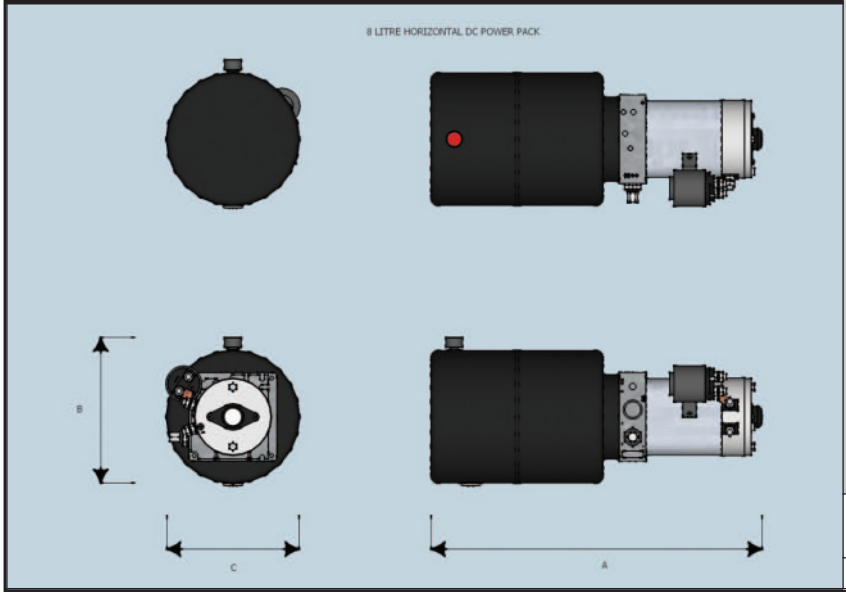

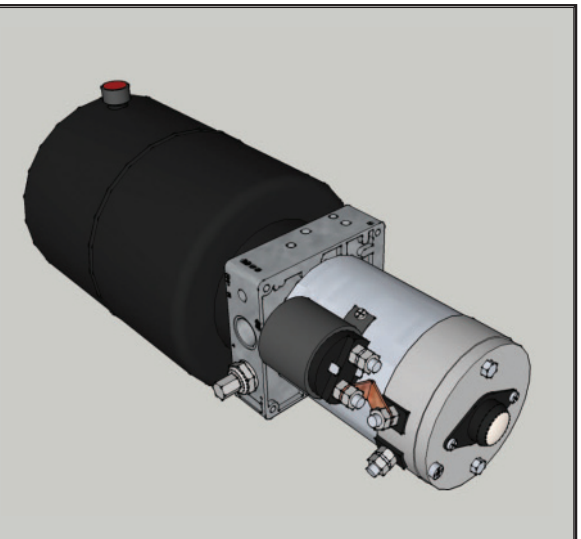

Tank Capacity	8 Litre Horizontal Tank		
	A	B	C
8ltr	504mm	228mm	200mm

12 Volt DC and 24 Volt DC Power Pack Dimensions

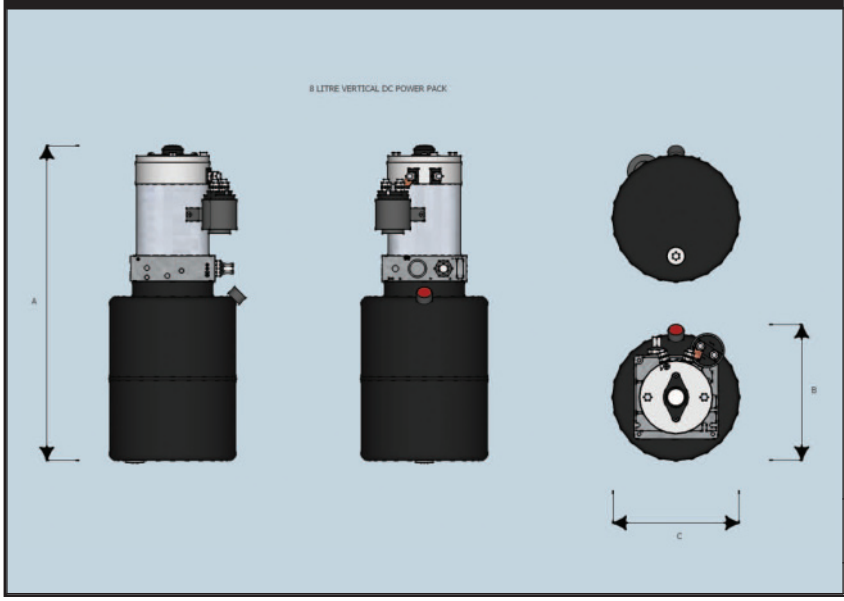

Tank Capacity	8 Litre Vertical Tank		
	A	B	C
8ltr	504mm	217mm	200mm

12 Volt DC and 24 Volt DC Power Pack Dimensions

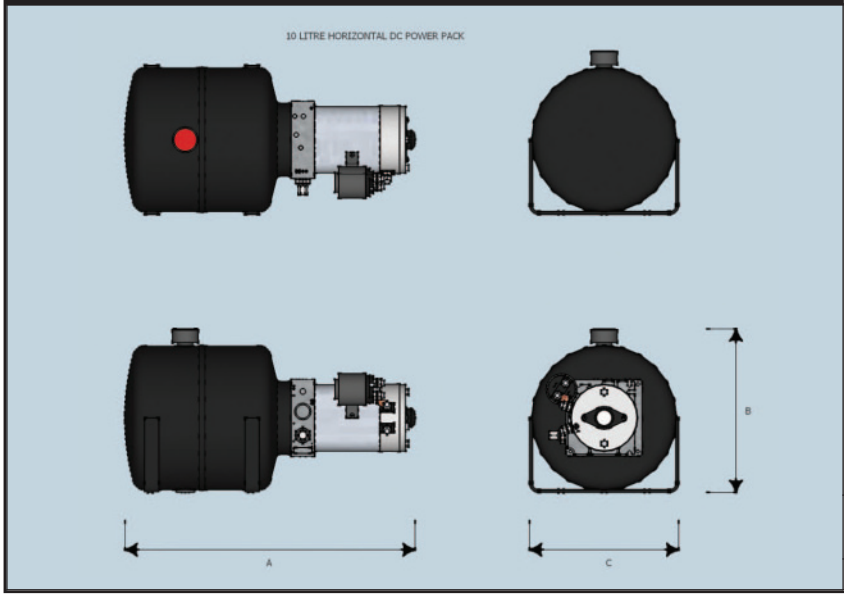

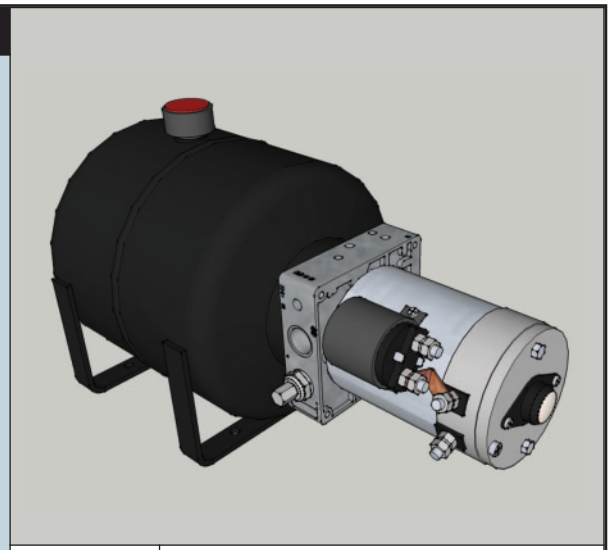

Tank Capacity	10 Litre Horizontal Tank		
	A	B	C
10ltr	509mm	285mm	260mm

12 Volt DC and 24 Volt DC Power Pack Dimensions

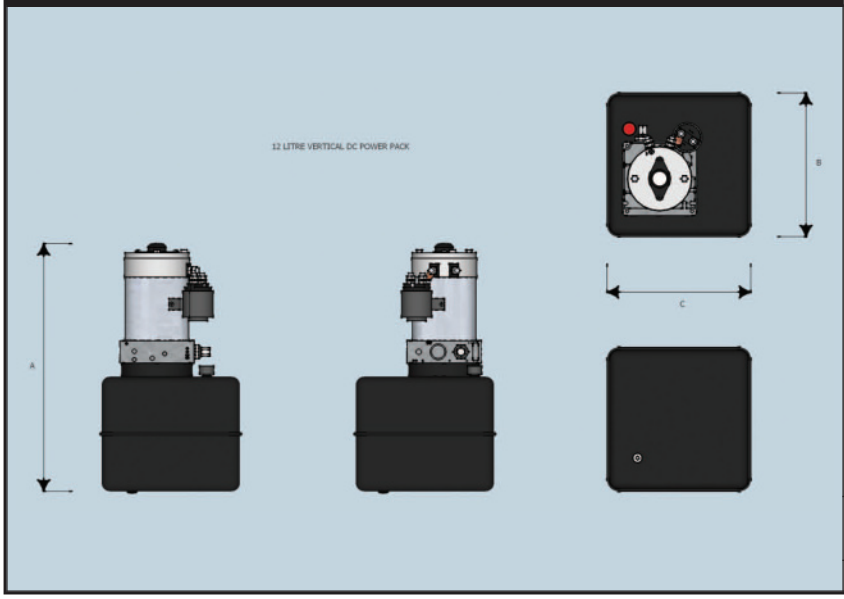

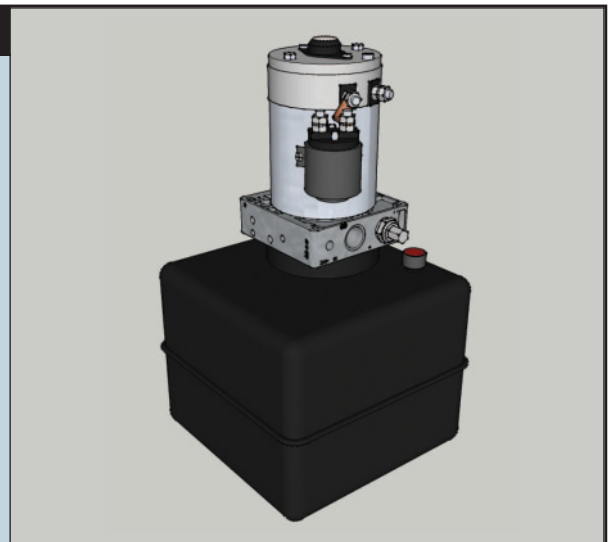

Tank Capacity	12 Litre Vertical Tank		
	A	B	C
12ltr	451mm	250mm	250mm

50% OFF ALL PRICES

12 Volt DC and 24 Volt DC Power Pack Dimensions

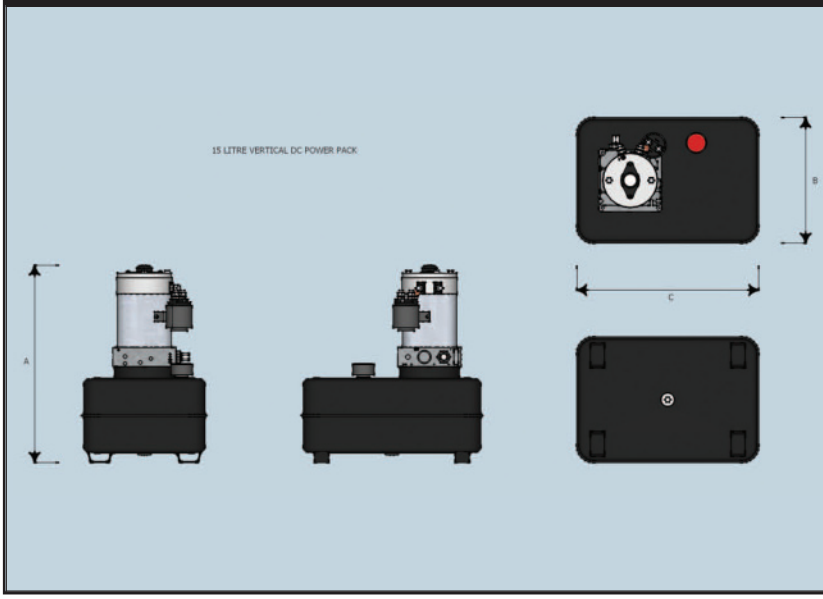

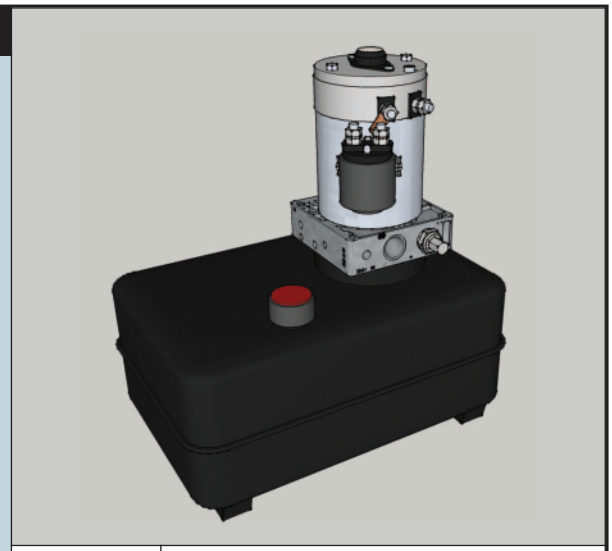

Tank Capacity	15 Litre Vertical Tank		
	A	B	C
15ltr	425mm	268mm	388mm

12 Volt DC and 24 Volt DC Power Pack Dimensions

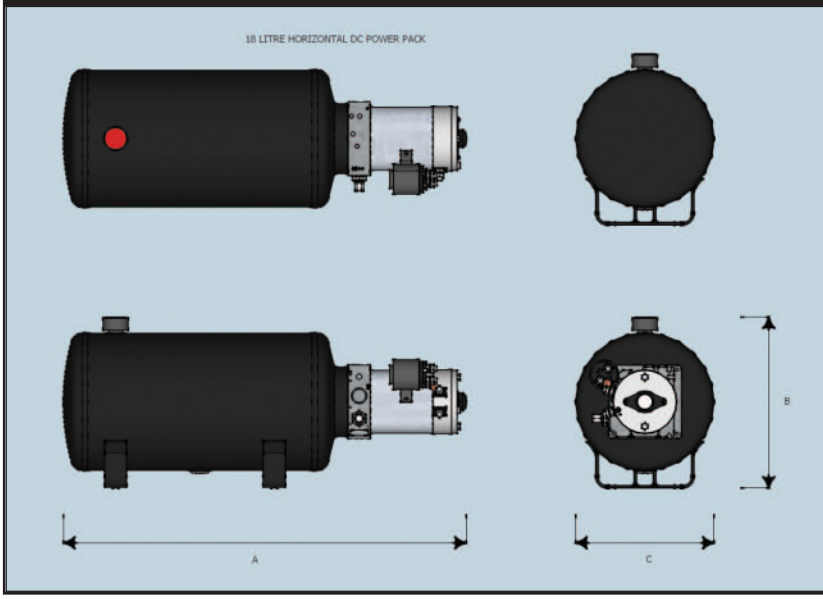

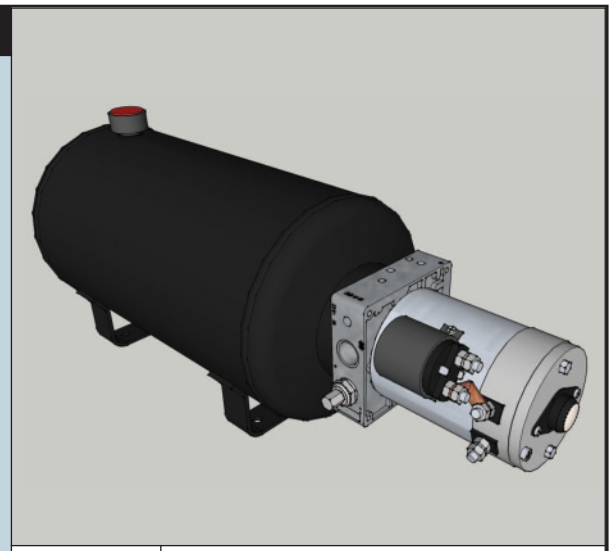

Tank Capacity	18 Litre Horizontal Tank		
	A	B	C
18ltr	739mm	318mm	170mm

110 - 240V AC POWER PACK DIMENSIONS

FLOWFIT

Single Phase 110/240 Volt AC Power Pack Dimensions

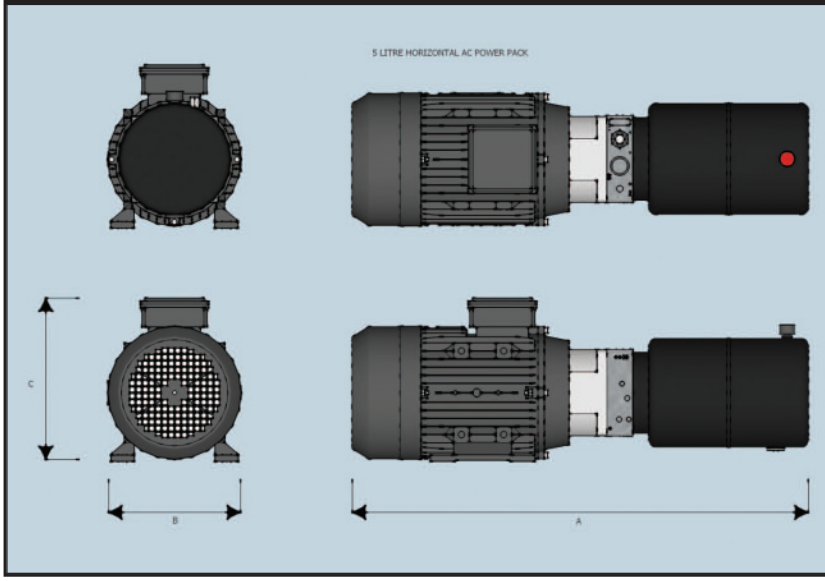

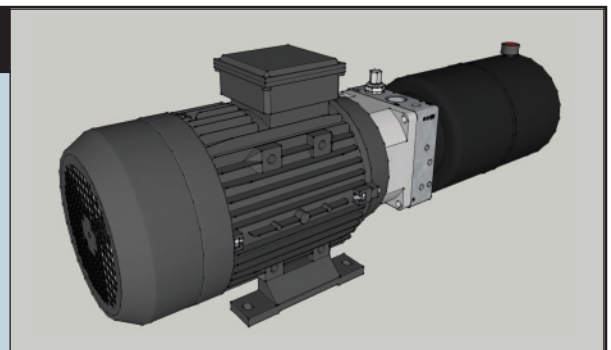

Motor size	5 Litre Horizontal Tank		
	A	B	C
0.25kw	557mm	170mm	210mm
0.37kw	557mm	170mm	210mm
0.55kw	610mm	170mm	220mm
0.75kw	610mm	170mm	220mm
1.1kw	630mm	175mm	230mm
1.5kw	655mm	172mm	230mm
2.2kw	691mm	196mm	255mm
3.0kw	691mm	196mm	255mm

Single Phase 110/240 Volt AC Power Pack Dimensions

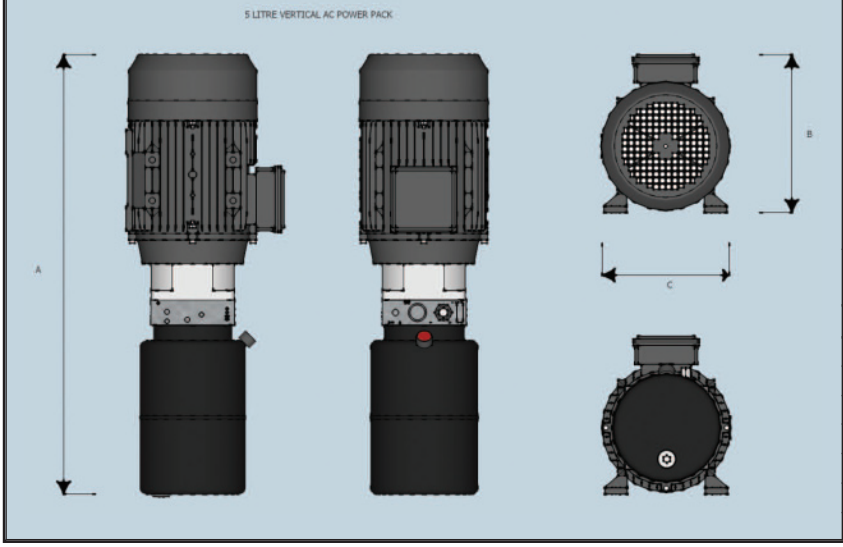

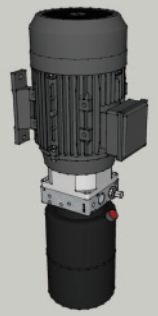

Motor size	5 Litre Vertical Tank		
	A	B	C
0.25kw	557mm	210mm	170mm
0.37kw	557mm	210mm	170mm
0.55kw	610mm	220mm	170mm
0.75kw	610mm	220mm	170mm
1.1kw	630mm	230mm	175mm
1.5kw	655mm	230mm	172mm
2.2kw	691mm	255mm	196mm
3.0kw	691mm	255mm	196mm

Single Phase 110/240 Volt AC Power Pack Dimensions

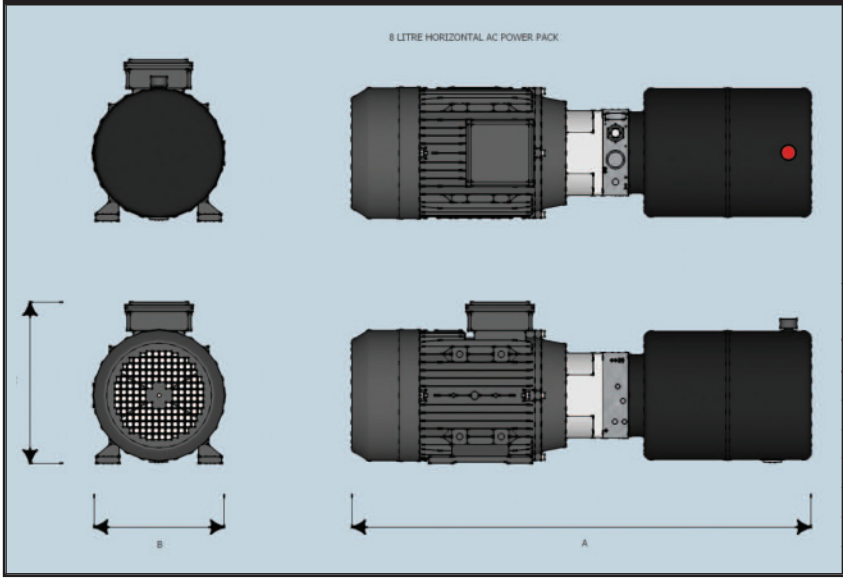

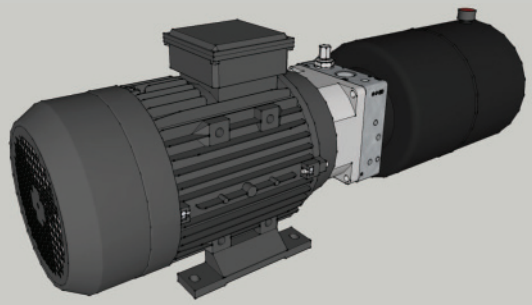

Motor size	8 Litre Horizontal Tank		
	A	B	C
0.25kw	572mm	200mm	234mm
0.37kw	572mm	200mm	234mm
0.55kw	605mm	200mm	255mm
0.75kw	605mm	200mm	255mm
1.1kw	645mm	200mm	275mm
1.5kw	670mm	200mm	275mm
2.2kw	706mm	200mm	280mm
3.0kw	706mm	200mm	280mm

Single Phase 110/240 Volt AC Power Pack Dimensions

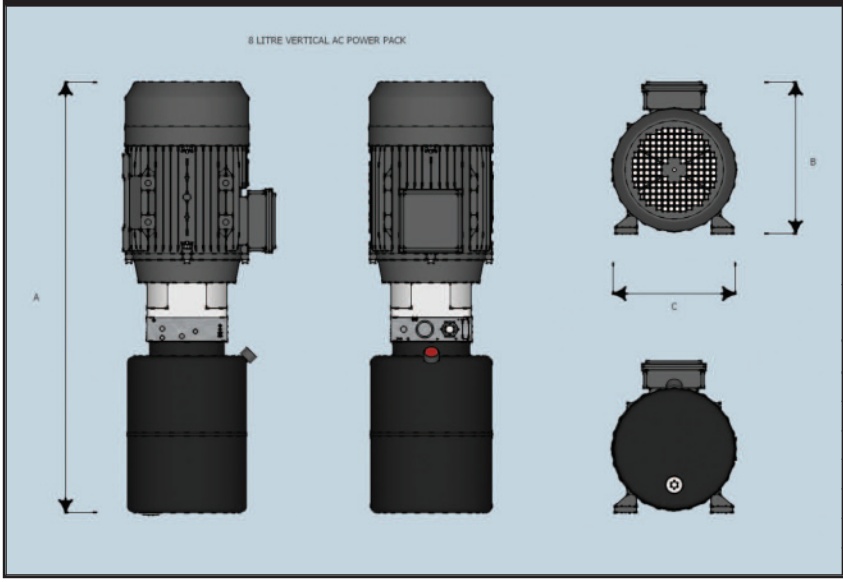

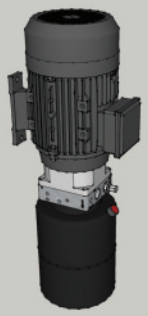

Motor size	8 Litre Vertical Tank		
	A	B	C
0.25kw	572mm	234mm	200mm
0.37kw	572mm	234mm	200mm
0.55kw	605mm	255mm	200mm
0.75kw	605mm	255mm	200mm
1.1kw	645mm	275mm	200mm
1.5kw	670mm	275mm	200mm
2.2kw	706mm	280mm	200mm
3.0kw	706mm	280mm	200mm

50% OFF ALL PRICES

Single Phase 110/240 Volt AC Power Pack Dimensions

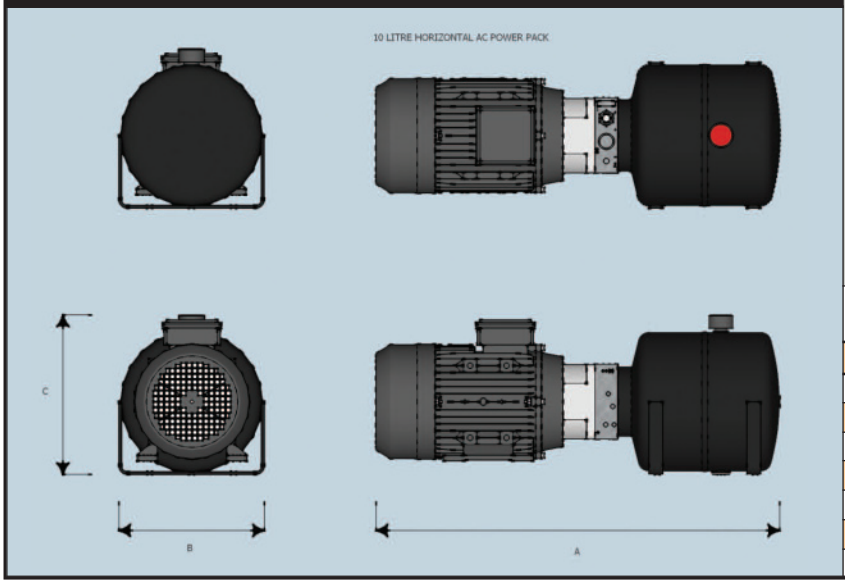

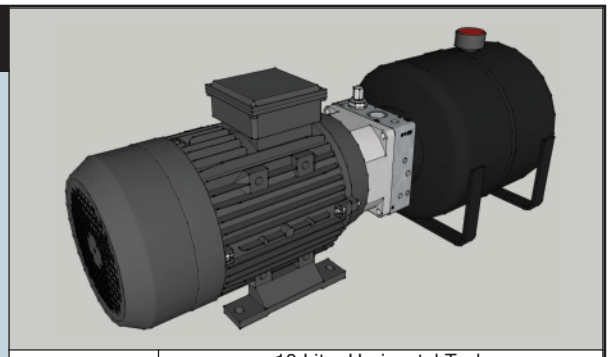

Motor size	10 Litre Horizontal Tank		
	A	B	C
0.25kw	577mm	260mm	285mm
0.37kw	577mm	260mm	285mm
0.55kw	610mm	260mm	285mm
0.75kw	610mm	260mm	285mm
1.1kw	650mm	260mm	285mm
1.5kw	675mm	260mm	285mm
2.2kw	711mm	260mm	285mm
3.0kw	711mm	260mm	285mm

Single Phase 110/240 Volt AC Power Pack Dimensions

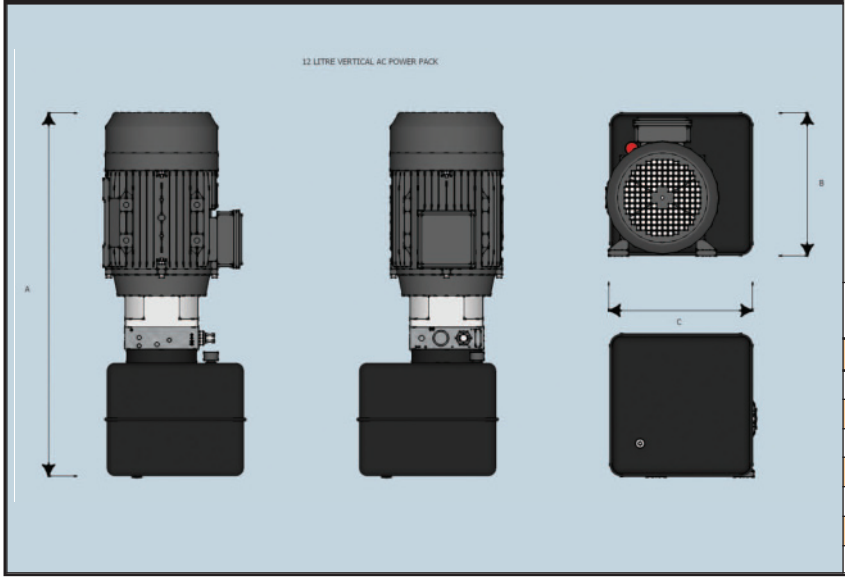

Motor size	12 Litre Vertical Tank		
	A	B	C
0.25kw	519mm	250mm	250mm
0.37kw	519mm	250mm	250mm
0.55kw	552mm	250mm	250mm
0.75kw	552mm	250mm	250mm
1.1kw	592mm	250mm	250mm
1.5kw	617mm	250mm	250mm
2.2kw	653mm	270mm	265mm
3.0kw	653mm	270mm	265mm

Single Phase 110/240 Volt AC Power Pack Dimensions

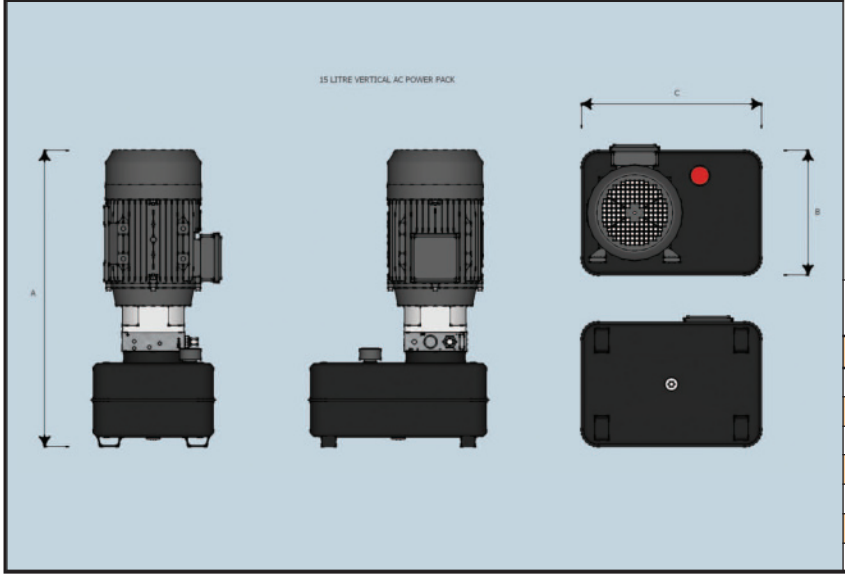

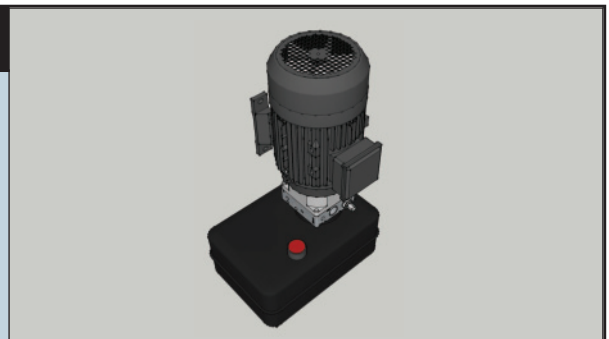

Motor size	15 Litre Vertical Tank		
	A	B	C
0.25kw	493mm	268mm	388mm
0.37kw	493mm	268mm	388mm
0.55kw	526mm	269mm	388mm
0.75kw	526mm	269mm	388mm
1.1kw	566mm	279mm	388mm
1.5kw	591mm	279mm	388mm
2.2kw	627mm	304mm	388mm
3.0kw	627mm	304mm	388mm

Single Phase 110/240 Volt AC Power Pack Dimensions

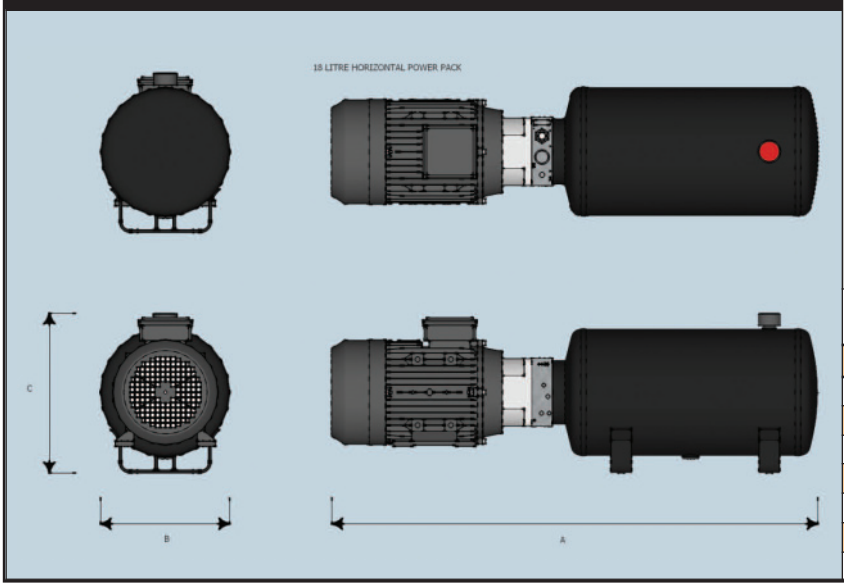

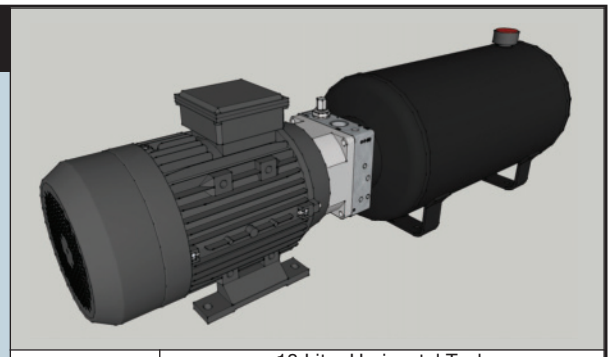

Motor size	18 Litre Horizontal Tank		
	A	B	C
0.25kw	807mm	250mm	318mm
0.37kw	807mm	250mm	318mm
0.55kw	840mm	250mm	318mm
0.75kw	840mm	250mm	318mm
1.1kw	880mm	250mm	318mm
1.5kw	905mm	250mm	318mm
2.2kw	941mm	250mm	318mm
3.0kw	941mm	250mm	318mm

415V AC POWER PACK DIMENSIONS

FLOWFIT

Three Phase 415 Volt AC Power Pack Dimensions

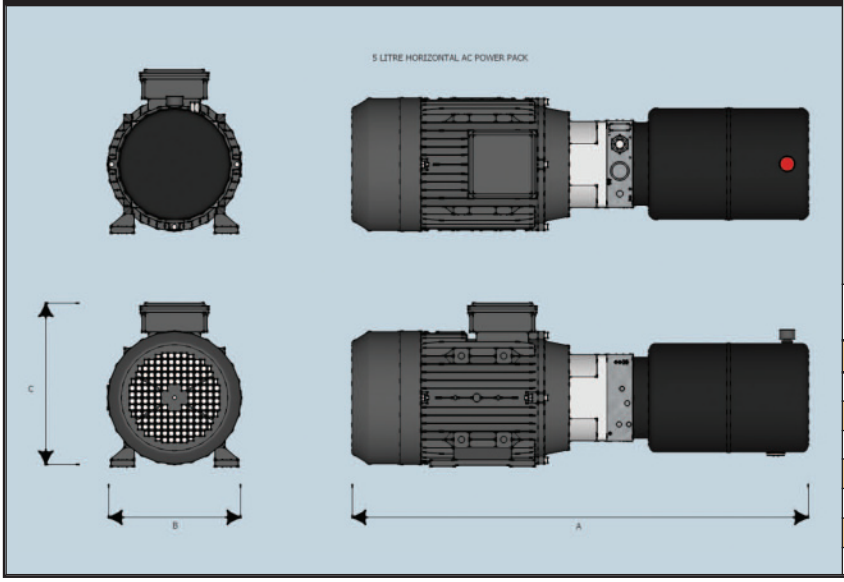

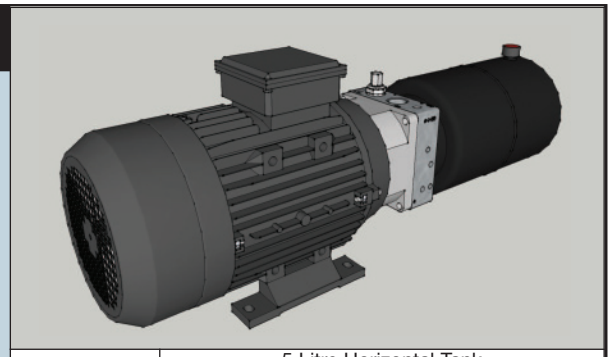

Motor size	5 Litre Horizontal Tank		
	A	B	C
0.25kw	557mm	170mm	195mm
0.37kw	557mm	170mm	195mm
0.55kw	585mm	170mm	197mm
0.75kw	585mm	170mm	197mm
1.1kw	605mm	175mm	280mm
1.5kw	630mm	172mm	280mm
2.2kw	697mm	196mm	287mm
3.0kw	697mm	196mm	287mm

Three Phase 415 Volt AC Power Pack Dimensions

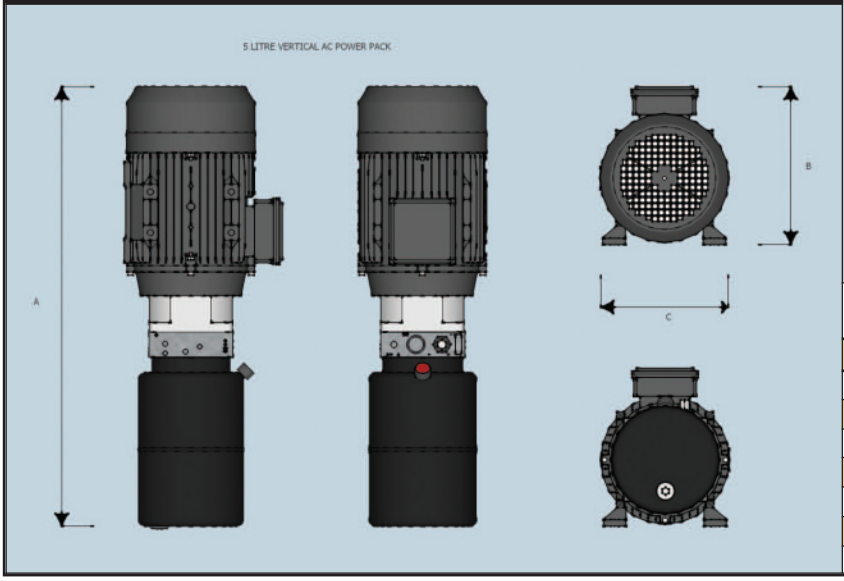

Motor size	5 Litre Vertical Tank		
	A	B	C
0.25kw	557mm	195mm	170mm
0.37kw	557mm	195mm	170mm
0.55kw	585mm	197mm	170mm
0.75kw	585mm	197mm	170mm
1.1kw	605mm	280mm	175mm
1.5kw	630mm	280mm	172mm
2.2kw	697mm	287mm	196mm
3.0kw	697mm	287mm	196mm

50% OFF ALL PRICES

Three Phase 415 Volt AC Power Pack Dimensions

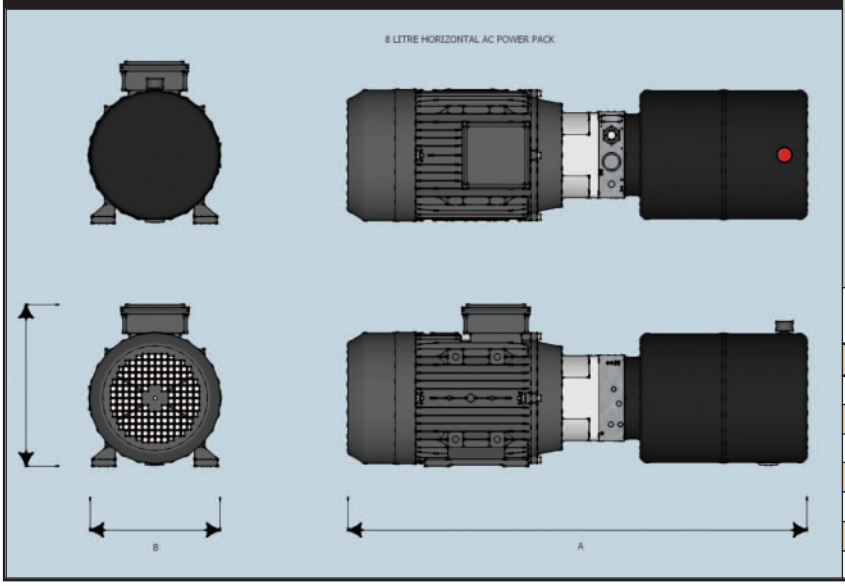

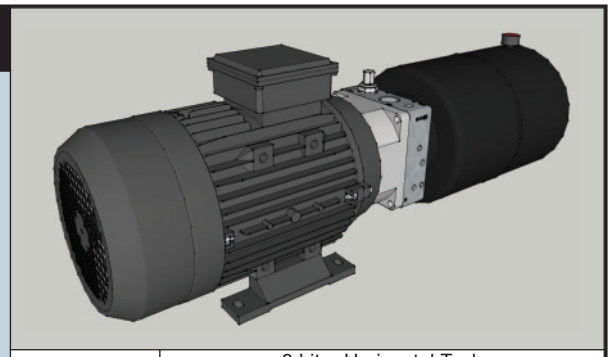

Motor size	8 Litre Horizontal Tank		
	A	B	C
0.25kw	572mm	200mm	228mm
0.37kw	572mm	200mm	228mm
0.55kw	600mm	200mm	251mm
0.75kw	600mm	200mm	251mm
1.1kw	620mm	200mm	259mm
1.5kw	645mm	200mm	259mm
2.2kw	712mm	200mm	266mm
3.0kw	712mm	200mm	266mm

Three Phase 415 Volt AC Power Pack Dimensions

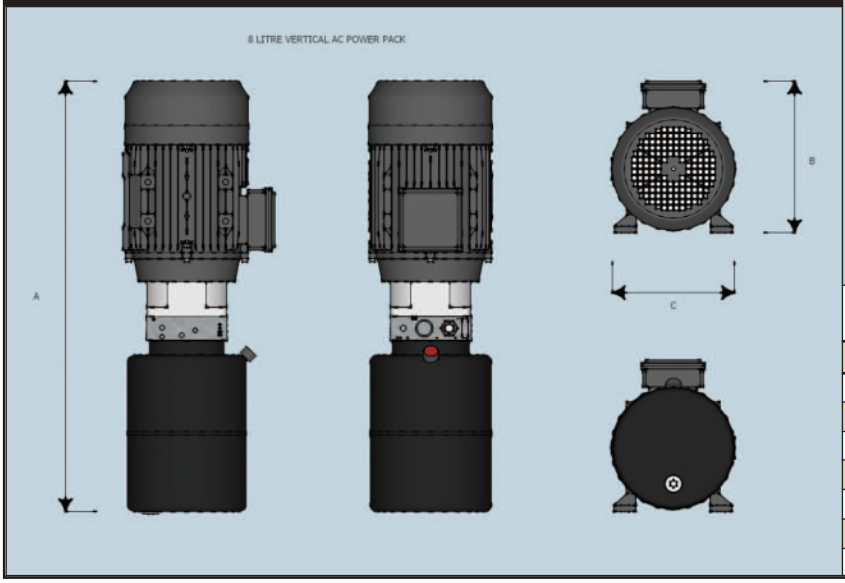

Motor size	8 Litre Vertical Tank		
	A	B	C
0.25kw	572mm	228mm	200mm
0.37kw	572mm	228mm	200mm
0.55kw	600mm	251mm	200mm
0.75kw	600mm	251mm	200mm
1.1kw	620mm	259mm	200mm
1.5kw	645mm	259mm	200mm
2.2kw	712mm	266mm	200mm
3.0kw	712mm	266mm	200mm

Three Phase 415 Volt AC Power Pack Dimensions

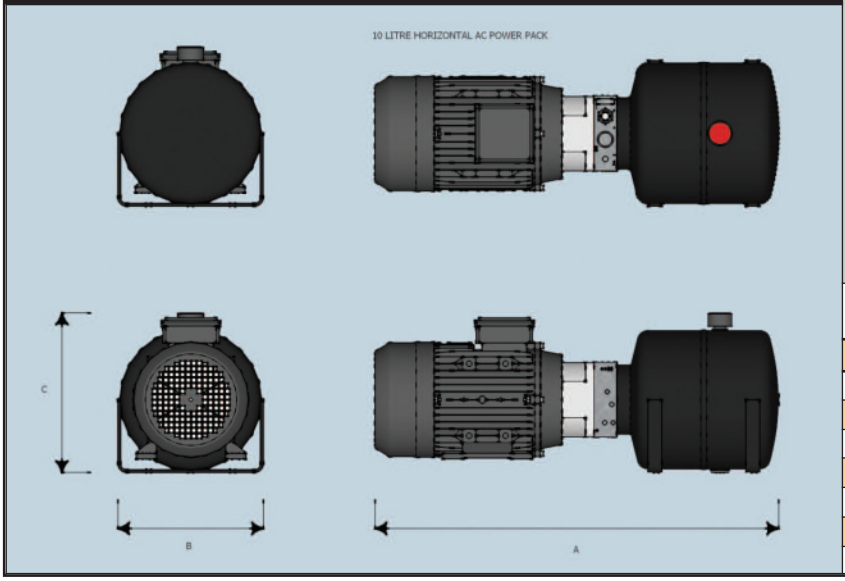

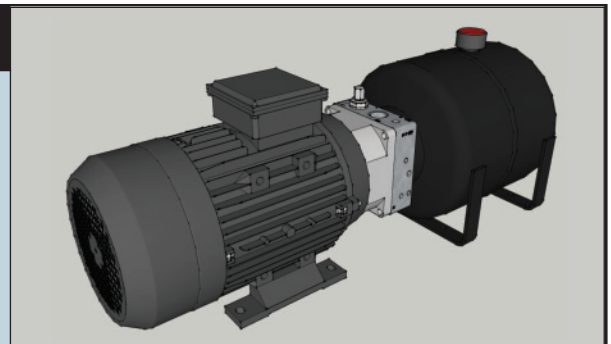

Motor size	10 Litre Horizontal Tank		
	A	B	C
0.25kw	577mm	260mm	285mm
0.37kw	577mm	260mm	285mm
0.55kw	605mm	260mm	285mm
0.75kw	605mm	260mm	285mm
1.1kw	625mm	260mm	285mm
1.5kw	650mm	260mm	285mm
2.2kw	717mm	260mm	285mm
3.0kw	717mm	260mm	285mm

Three Phase 415 Volt AC Power Pack Dimensions

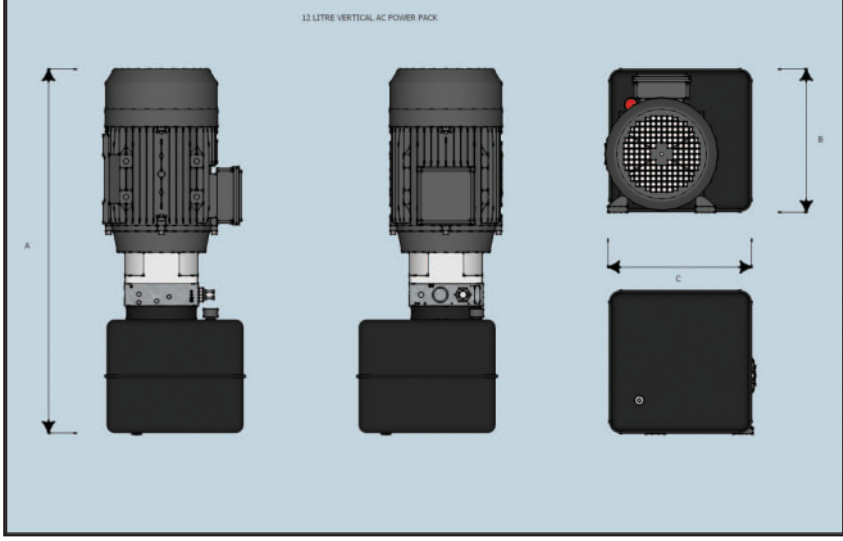

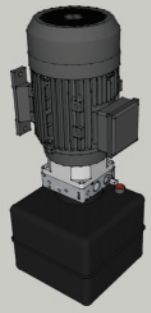

Motor size	12 Litre Vertical Tank		
	A	B	C
0.25kw	519mm	250mm	250mm
0.37kw	519mm	250mm	250mm
0.55kw	547mm	250mm	250mm
0.75kw	547mm	250mm	250mm
1.1kw	567mm	250mm	250mm
1.5kw	592mm	250mm	250mm
2.2kw	659mm	250mm	260mm
3.0kw	659mm	250mm	260mm

Three Phase 415 Volt AC Power Pack Dimensions

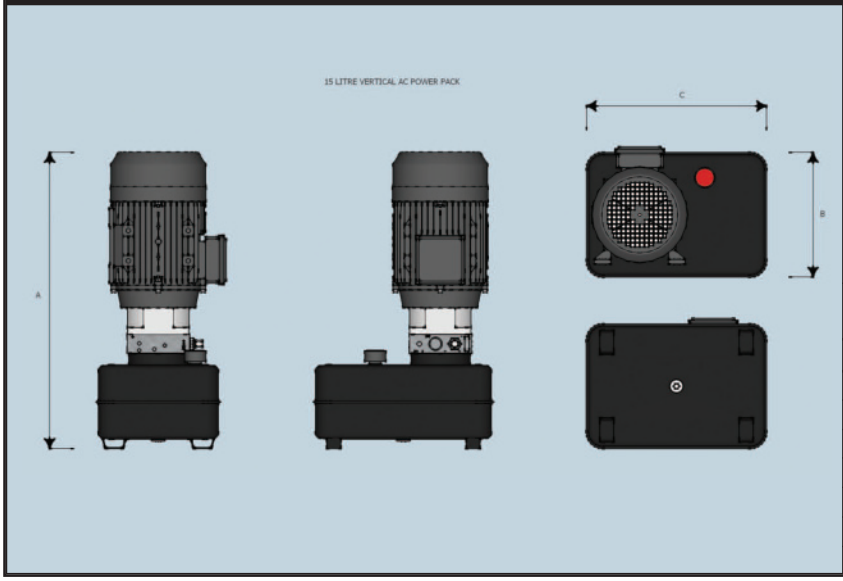

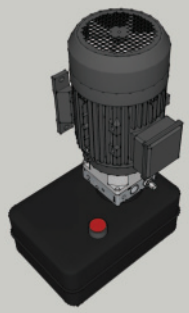

Motor size	15 Litre Vertical Tank		
	A	B	C
0.25kw	493mm	268mm	388mm
0.37kw	493mm	268mm	388mm
0.55kw	521mm	270mm	388mm
0.75kw	521mm	270mm	388mm
1.1kw	541mm	279mm	388mm
1.5kw	566mm	279mm	388mm
2.2kw	633mm	286mm	388mm
3.0kw	633mm	286mm	388mm

Three Phase 415 Volt AC Power Pack Dimensions

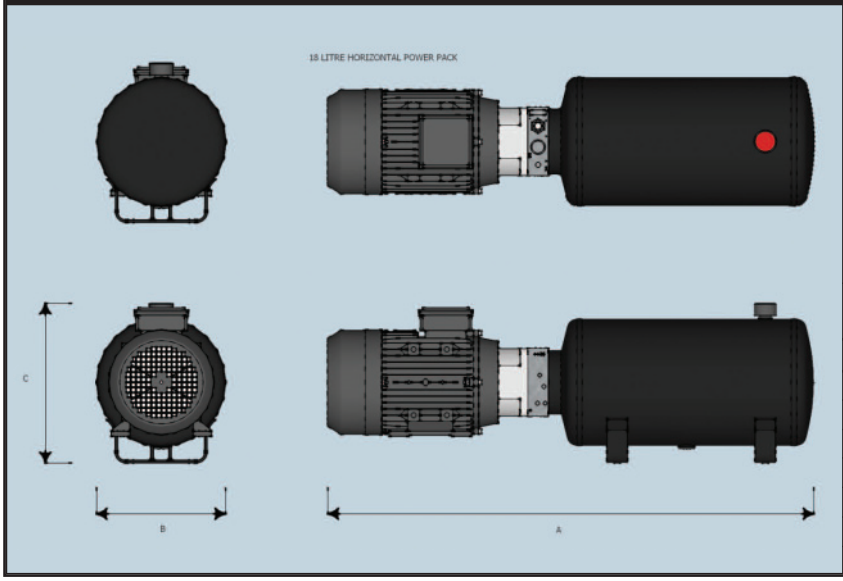

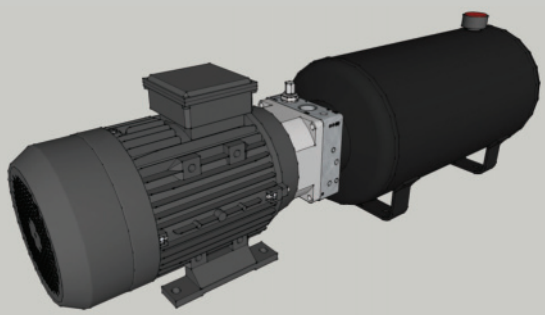

Motor size	18 Litre Horizontal Tank		
	A	B	C
0.25kw	807mm	250mm	318mm
0.37kw	807mm	250mm	318mm
0.55kw	835mm	250mm	318mm
0.75kw	835mm	250mm	318mm
1.1kw	855mm	250mm	318mm
1.5kw	880mm	250mm	318mm
2.2kw	947mm	250mm	318mm
3.0kw	947mm	250mm	318mm

50% OFF ALL PRICES

HF500 250 BAR POWER PACKS

The HF500 series of standard power packs is based on a range of 3phase motors from 2.2kw to 18.5kw. Supplied fully assembled and tested, these units offer pressures up to 250 bar and flows up to 133lpm. All components in stock ready to assemble for immediate delivery.

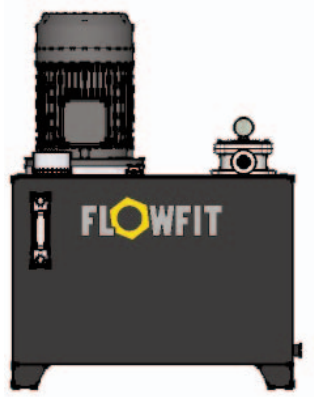

THE HF500 BASIC POWERUNIT STEP 1 CONSISTS OF:

- ELECTRIC MOTOR 415V 50HZ 3PH 4PL
- GALTECH AP200 OR AP300 GEAR PUMP
- FLOWFIT BELL HOUSING AND DRIVE COUPLING
- IKRON TANK TOP RETURN LINE FILTER 10 MICRON C/W VISUAL INDICATOR
- IKRON FILLER BREATHER AND IKRON SUCTION STRAINER 125 MICRON

TO GENERATE YOUR FULL ORDER NUMBER SELECT THE COSTING CODE OR EACH COMPONENT

FLOW	MAX PRESS BAR	MOTOR KW SIZE	PART NUMBER	PRICE
15.8	175	5.5	HF50010	£1884.21
15.8	235	7.5	HF50011	£1968.04
21.6	50	2.2	HF50012	£1516.52
21.6	90	4	HF50013	£1652.78
21.6	125	5.5	HF50014	£1884.21
21.6	170	7.5	HF50015	£1968.04
21.6	250	11	HF50016	£2378.04
27.2	40	2.2	HF50017	£1516.52
27.2	55	3	HF50018	£1568.96
27.2	70	4	HF50019	£1652.78
27.2	100	5.5	HF50020	£1884.21
27.2	135	7.5	HF50021	£1968.04
27.2	200	11	HF50022	£2378.04
30.2	40	2.2	HF50023	£1516.52
30.2	50	3	HF50024	£1568.96
30.2	64	4	HF50025	£1652.78
30.2	95	5.5	HF50026	£1923.53
30.2	130	7.5	HF50027	£1968.04
30.2	190	11	HF50028	£2417.35
30.2	250	15	HF50029	£2509.24
37.5	40	3	HF50030	£1568.96
37.2	55	4	HF50031	£1652.78
37.2	80	5.5	HF50032	£1884.21
37.2	105	7.5	HF50033	£1968.04
37.2	155	11	HF50034	£2378.04
37.2	210	15	HF50035	£2509.24
37.2	250	18.5	HF50036	£2935.66
44.6	45	4	HF50037	£2509.24
44.6	65	5.5	HF50038	£2742.49
44.6	85	7.5	HF50039	£2828.13
44.6	125	11	HF50040	£3308.43
53	40	4	HF50041	£2509.24
53	55	5.5	HF50042	£2742.49
53	75	7.5	HF50043	£2828.13
53	110	11	HF50044	£3308.95
53	150	15	HF50045	£3447.71
53	180	18.5	HF50046	£3855.88
64.8	40	5.5	HF50047	£2742.49
64.8	55	7.5	HF50048	£2828.13
64.8	80	11	HF50049	£3309.21
64.8	110	15	HF50050	£3447.71
64.8	140	18.5	HF50051	£3855.88
76.3	30	5.5	HF50052	£2742.49
76.3	45	7.5	HF50053	£2737.03
76.3	65	11	HF50054	£3309.21
76.3	100	15	HF50055	£3447.71
76.3	120	18.5	HF50056	£3855.88
90.7	40	7.5	HF50057	£2737.03
90.7	60	11	HF50058	£3308.43
90.7	80	15	HF50059	£3447.71
90.7	100	18.5	HF50060	£3855.88
108	35	7.5	HF50061	£2737.03
108	50	11	HF50062	£3308.43
108	70	15	HF50063	£3447.71
108	85	18.5	HF50064	£3855.88
133	40	11	HF50065	£3308.43
133	55	15	HF50066	£3447.71
133	70	18.5	HF50067	£3855.88

EXAMPLE

STEP 1

SELECT MOTOR

EG:
HF50053
£2,737.03

THE HF500 BASIC POWERUNIT STEP 1 CONSISTS OF:

- ELECTRIC MOTOR 415V 50HZ 3PH 4PL
- GALTECH AP200 OR AP300 GEAR PUMP
- FLOWFIT BELL HOUSING AND DRIVE COUPLING
- IKRON TANK TOP RETURN LINE FILTER 10 MICRON C/W VISUAL INDICATOR
- IKRON FILLER BREATHER AND IKRON SUCTION STRAINER 125 MICRON

CONTINUED ON NEXT PAGE

HYDRAULIC TANKS	COSTING CODE	PART NO	PRICE
30 LITRES CAPACITY	A	HF30	£291.55
55 LITRES CAPACITY	B	HF55	£373.58
72 LITRES CAPACITY	C	HF75	£431.88
98 LITRES CAPACITY	D	HF100	£499.29
160 LITRES	E	HF180	£652.37
200 LITRES	F	HFSS200	£805.43
250 LITRES	G	HFSS250	£1082.42
300 LITRES	H	HFSS300	£1273.76
400 LITRES	J	HFSS400	£1958.92
630 LITRES CAPACITY	K	HFSS630	£2356.17
800 LITRES CAPACITY	L	HFSS800	£3119.74

FITTED WITH FILTREC LEVEL INDICATOR.

STEP 2
SELECT TANK
EG:
J
£1958.92

CETOP 3 MANIFOLDS	COSTING CODE	PART NO	PRICE
CETOP 3 1STN M/FOLD	31	105161/1	£112.63
CETOP 3 2STN M/FOLD	32	105161/2	£166.55
CETOP 3 3STN M/FOLD	33	105161/3	£215.19
CETOP 3 4STN M/FOLD	34	105161/4	£266.69
CETOP 3 5STN M/FOLD	35	105161/5	£335.82
CETOP 3 1STN M/FOLD C/W RV	31R	115161/1	£347.50
CETOP 3 2STN M/FOLD C/W RV	32R	115161/2	£400.25
CETOP 3 3STN M/FOLD C/W RV	33R	115161/3	£446.48
CETOP 3 4STN M/FOLD C/W RV	34R	115161/4	£500.32
CETOP 3 5STN M/FOLD C/W RV	35R	115161/5	£569.53
NO MANIFOLD NEEDED	XXX		£0.00

STEP 3
SELECT MANIFOLD
EG:
XXX
£0.00

CETOP 3 VALVES	COSTING CODE	PRICE
NG 6 D/ACTING VALVE	NG6D	£163.32
NG 6 S/ACTING VALVE	NG6S	£116.88
NO VALVES NEEDED	XXX	£0.00

STEP 4
SELECT CETOP 3 VALVES
EG:
XXX
£0.00

CETOP 5 MANIFOLDS	COSTING CODE	PART NO	PRICE
CETOP 5 1STN M/FOLD	51	205171/1	£193.50
CETOP 5 2STN M/FOLD	52	205171/2	£265.08
CETOP 5 3STN M/FOLD	53	205171/3	£351.73
CETOP 5 4STN M/FOLD	54	205171/4	£452.34
CETOP 5 5STN M/FOLD	55	205171/5	£452.34
CETOP 5 1STN M/FOLD C/W RV	51R	115171/1	£521.84
CETOP 5 2STN M/FOLD C/W RV	52R	115171/2	£593.47
CETOP 5 3STN M/FOLD C/W RV	53R	115171/3	£680.03
CETOP 5 4STN M/FOLD C/W RV	54R	115171/4	£782.77
CETOP 5 5STN M/FOLD C/W RV	55R	115171/5	£884.41
NO MANIFOLD NEEDED	XXX		£0.00

STEP 5
SELECT CETOP 5 MANIFOLD
EG:
51
£193.50

CETOP 5 VALVES	COSTING CODE	PRICE
NG 10 D/ACTING VALVE	NG10D	£255.11
NG 10 S/ACTING VALVE	ND10S	£196.79
NO VALVES NEEDED	XXX	£0.00

STEP 6
SELECT CETOP 5 VALVES
EG:
NG10D
£255.11

CETOP 7 MANIFOLDS	COSTING CODE	PART NO	PRICE
CETOP 7 1STN M/FOLD	71	705161/1	£945.83
CETOP 7 2STN M/FOLD	72	705161/2	£1551.02
CETOP 7 3STN M/FOLD	73	705161/3	£2189.98
NO MANIFOLD NEEDED	XXX		£0.00

STEP 7
SELECT CETOP 7 MANIFOLD
EG:
XXX
£0.00
CONTINUED ON NEXT PAGE

CETOP 7 VALVE PART No REF HF50065/67	COSTING CODE	PRICE
NG 16 D/ACTING C/W NG6 PILOT VALVE	NG16D	£510.23
NG 16 S/ACTING C/W NG6 PILOT VALVE	ND16S	£461.03
NO VALVES NEEDED	XXX	£0.00

STEP 8
SELECT CETOP 7 VALVE
EG:
XXX
£0.00

45LTR DIRECTIONAL CONTROL VALVE PART NO REF HF50010/40 HDM11P/HDM11S	COSTING CODE	PART NO	PRICE
3/8" 2 BANK D/ACTING S/RETURN VALVE	P2	HDM11P/2	£289.66
3/8" 3 BANK D/ACTING S/RETURN VALVE	P3	HDM11P/3	£377.60
3/8" 4 BANK D/ACTING S/RETURN VALVE	P4	HDM11P/4	£465.52
3/8" 5 BANK D/ACTING S/RETURN VALVE	P5	HDM11P/5	£575.06
3/8" 6 BANK D/ACTING S/RETURN VALVE	P6	HDM11P/6	£691.79
1/2" 1 BANK D/ACTING S/RETURN VALVE	S1	HDM11S/1	£240.68
1/2" 2 BANK D/ACTING S/RETURN VALVE	S2	HDM11S/2	£331.47
1/2" 3 BANK D/ACTING S/RETURN VALVE	S3	HDM11S/3	£439.58
1/2" 4 BANK D/ACTING S/RETURN VALVE	S4	HDM11S/4	£536.15
1/2" 5 BANK D/ACTING S/RETURN VALVE	S5	HDM11S/5	£638.47
1/2" 6 BANK D/ACTING S/RETURN VALVE	S6	HDM11S/6	£746.56
70LTR DIRECTIONAL CONTROL VALVE **PART No REF HF50041/51** **HDM18**			
1/2" 1 BANK D/ACTING S/RETURN VALVE	181	HDM18/1	£257.98
1/2" 2 BANK D/ACTING S/RETURN VALVE	182	HDM18/2	£412.18
1/2" 3 BANK D/ACTING S/RETURN VALVE	183	HDM18/3	£554.89
1/2" 4 BANK D/ACTING S/RETURN VALVE	184	HDM18/4	£699.01
100LTR DIRECTIONAL CONTROL VALVE **PART No REF CONV52/64**			
3/4" 1 BANK D/ACTING S/RETURN VALVE	251	HDM25/1	£364.63
3/4" 2 BANK D/ACTING S/RETURN VALVE	252	HDM25/2	£590.90
NO VALVES NEEDED	XXX		£0.00

STEP 9
SELECT DIRECTIONAL CONTROL VALVE
EG:
XXX
£0.00

FILTRATION	COSTING CODE	PRICE
NO EXTRA FILTRATION REQUIRED	XXF	£0.00

STEP 10
SELECT FILTRATION
EG:
XXF
£0.00

EXTRA CARTRIDGE VALVES	COSTING CODE	PRICE
NO EXTRA CARTRIDGE VALVES REQUIRED.	XXV	£0.00

STEP 11
SELECT CARTRIDGE VALVES
EG:
XXV
£0.00

COSTING CODE	ADD ON EXTRAS	PRICE
PG1	PRESSURE GAUGE 0-1000PSI PLUS ISOLATOR	£35.55
PG2	PRESSURE GAUGE 0-2000PSI PLUS ISOLATOR	£35.55
PG3	PRESSURE GAUGE 0-3000PSI PLUS ISOLATOR	£35.55
PG4	PRESSURE GAUGE 0-4000PSI PLUS ISOLATOR	£35.55
PG6	PRESSURE GAUGE 0-6000PSI PLUS ISOLATOR	£35.55
XXX	NOT REQUIRED	£0.00
PLUG	13 Amp plug c/w 2 metre cable	£51.09

STEP 12
SELECT EXTRAS
EG:
PG1
£35.55

ALL POWER PACKS ARE FULLY ASSEMBLED AND TESTED
ISSUED WITH 12 MONTHS WARRANTY FROM INVOICE DATE

★★ PRICE PROMISE ★★
Need more equipment on your power unit. Just select the items you need from our catalogue, add them to your powerpack and take off the relevant discount to arrive at your nett price.

FULL ORDER NUMBER FOR EXAMPLE SHOWN
HF50053-J-XXX-XXX-51-NG10-XXX-XXX-XXX-XXF-XXV-PG1

TOTAL COST OF EXAMPLE SHOWN
£5180.11

DETAILS FOR INSTALLATION HF500

HF 500 DIMENSIONS

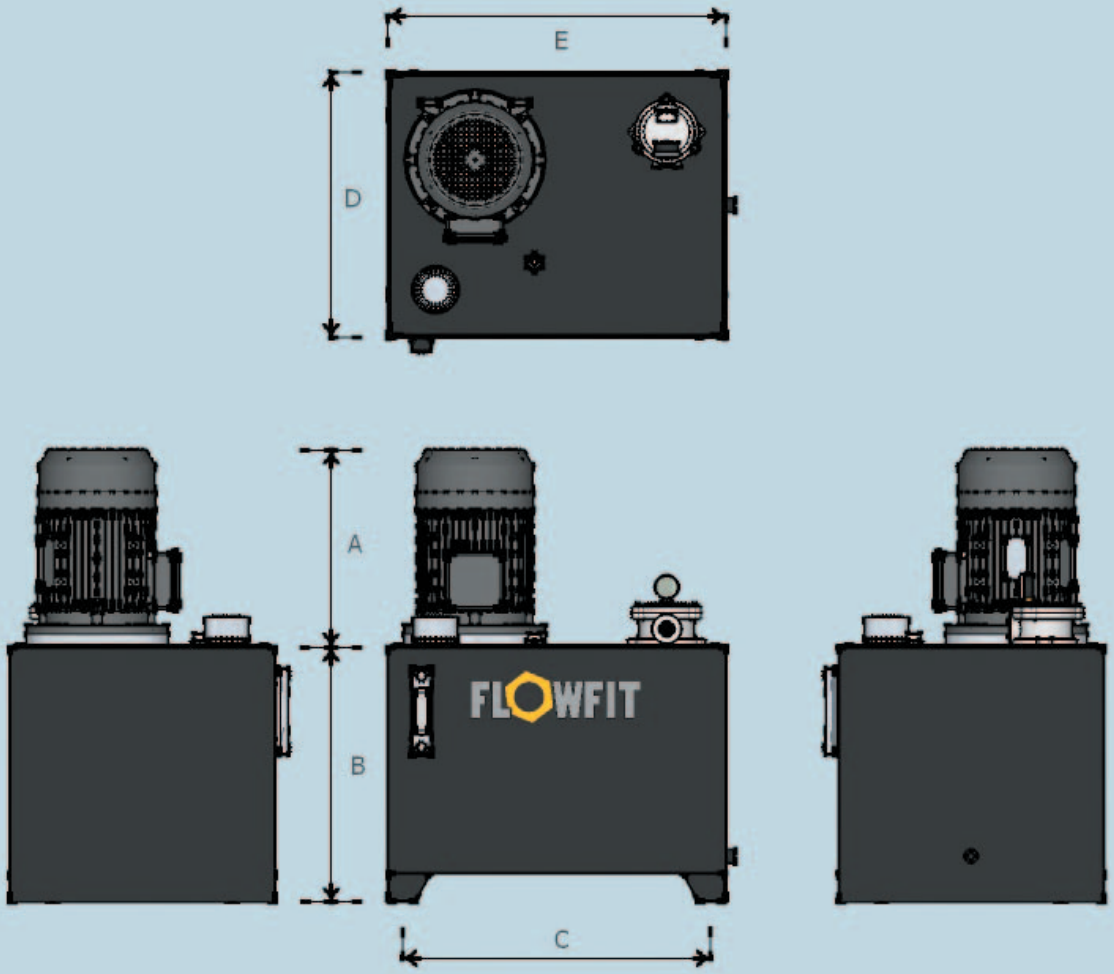

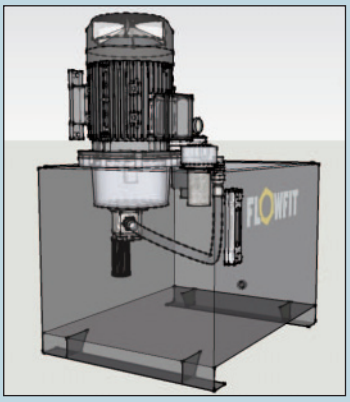

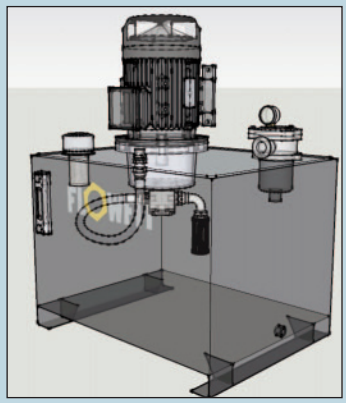

	RESERVOIR DIMENSIONS			
TANK CAPACITY	B	C	D	E
39 Litre	335	428	375	470
58 Litre	365	548	470	600
75 Litre	455	548	470	600
100 Litre	505	625	520	675
165 Litre	555	755	620	805
200 Litre	560	820	640	900
250 Litre	580	930	690	1010
300 Litre	580	1070	700	1150
400 Litre	580	1434	735	1514
630 Litre	770	1434	945	1514

THREE PHASE ELECTRIC MOTOR DIMENSION		
MOTOR	FRAME	A
2.2-4.0 KW	D100/D112	326/335
5.5-7.5 KW	D132	305/420
11-15 KW	D160	510
18.5-22 KW	D180	590
30 KW	D200	660
37-45 KW	D225	705
55 KW	D250	730

SINGLE PHASE ELECTRIC MOTOR DIMENSION		
MOTOR	FRAME	A
2.2	D100	320
3 KW	D112	340

50% OFF ALL PRICES

HF600 350 BAR VARIABLE FLOW HIGH PRESSURE POWER PACKS

The HF600 series of standard power packs is based on a range of 3phase motors from 7.5kw to 22kw. Supplied fully assembled and tested, These units offer pressures up to 350 bar and flows up to 34.5 l/min,higher flow rates upon request.
All components in stock ready to assemble.

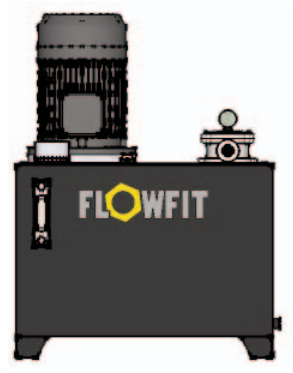

THE HF600 BASIC POWERUNIT STEP 1 CONSISTS OF:

- ELECTRIC MOTOR 415V 50HZ 3PH 4PL
- KOMPASS VARIABLE DISPLACEMENT PRESSURE COMPENSATED PISTON PUMP
- FLOWFIT BELL HOUSING AND DRIVE COUPLING
- IKRON TANK TOP RETURN LINE FILTER 10 MICRON C/W VISUAL INDICATOR
- IKRON FILLER BREATHER AND IKRON SUCTION STRAINER 125 MICRON

TO GENERATE YOUR FULL ORDER NUMBER SELECT THE COSTING CODE OR EACH COMPONENT

FLOW (VARIABLE DISPLACEMENT PRESSURE COMPENSATED PISTON PUMP)	**COSTING CODE**	**MAX PRESS BAR**	**MOTOR KW SIZE**	**PRICE**
24 L/MIN	HF6001	140	7.5	£5102.33
24 L/MIN	HF6002	250	11	£5630.76
24 L/MIN	HF6003	350	15KW	£5785.67
30 L/MIN	HF6004	140	11KW	£5685.46
30 L/MIN	HF6005	250	15.KW	£5840.34
30 L/MIN	HF6006	350	22KW	£6423.46
34.5 L/MIN	HF6007	140	11KW	£5685.46
34.5 L/MIN	HF6008	250	15KW	£5840.34
34.5 L/MIN	HF6009	350	22KW	£6423.46

EXAMPLE
STEP 1
SELECT FLOW
EG:
UP6001
£5102.33

HYDRAULIC TANKS	**COSTING CODE**	**PART NO**	**PRICE**
58 LITRES CAPACITY	B	HF55	£373.54
75 LITRES CAPACITY	C	HF75	£422.76
100 LITRES CAPACITY	D	HF100	£499.29
165 LITRES CAPACITY	E	HF180	£537.89
200 LITRES CAPACITY	F	HFSS200	£805.43
FITTED WITH FILTREC LEVEL INDICATOR.			

STEP 2
SELECT TANK
EG:
D
£499.29

CETOP 3 M/FOLD PART NO REF	**COSTING CODE**	**PART NO**	**PRICE**
CETOP 3 1STN M/FOLD	31	105161/1	£112.72
CETOP 3 2STN M/FOLD	32	105161/2	£166.55
CETOP 3 3STN M/FOLD	33	105161/3	£212.78
CETOP 3 4STN M/FOLD	34	105161/4	£266.69
CETOP 3 5STN M/FOLD	35	105161/5	£335.82
CETOP 3 1STN M/FOLD C/W RV	31R	115161/1	£346.34
CETOP 3 2STN M/FOLD C/W RV	32R	115161/2	£400.25
CETOP 3 3STN M/FOLD C/W RV	33R	115161/3	£445.76
CETOP 3 4STN M/FOLD C/W RV	34R	115161/4	£500.32
CETOP 3 5STN M/FOLD C/W RV	35R	115161/5	£569.53
NO MANIFOLD NEEDED	XXX		£0.00

STEP 3
SELECT MANIFOLD
EG:
32
£166.55

CETOP 3 VALVES 315 BAR MAX PRESSURE	**COSTING CODE**	**PART NO**	**PRICE**
NG 6 D/ACTING VALVE	NG6D		£173.12
NG 6 S/ACTING VALVE	NG6S		£123.90
NO VALVES NEEDED	XXX		£0.00

STEP 4
SELECT VALVES
EG:
NG6S + NG6D
£123.90 + £173.12

CONTINUED ON NEXT PAGE

45LTR DIRECTIONAL CONTROL VALVE 400 BAR MAX PRESSURE HDM11P/HDM11S	COSTING CODE	PART NO	PRICE
3/8" 1 BANK D/ACTING S/RETURN VALVE	P1	HDM140/1	£147.00
3/8" 2 BANK D/ACTING S/RETURN VALVE	P2	HDM11P/2	£289.69
3/8" 3 BANK D/ACTING S/RETURN VALVE	P3	HDM11P/3	£377.60
3/8" 4 BANK D/ACTING S/RETURN VALVE	P4	HDM11P/4	£465.52
3/8" 5 BANK D/ACTING S/RETURN VALVE	P5	HDM11P/5	£575.06
3/8" 6 BANK D/ACTING S/RETURN VALVE	P6	HDM11P/6	£691.79
1/2" 1 BANK D/ACTING S/RETURN VALVE	S1	HDM11S/1	£240.68
1/2" 2 BANK D/ACTING S/RETURN VALVE	S2	HDM11S/2	£331.47
1/2" 3 BANK D/ACTING S/RETURN VALVE	S3	HDM11S/3	£439.58
1/2" 4 BANK D/ACTING S/RETURN VALVE	S4	HDM11S/4	£536.15
1/2" 5 BANK D/ACTING S/RETURN VALVE	S5	HDM11S/5	£638.47
1/2" 6 BANK D/ACTING S/RETURN VALVE	S6	HDM11S/6	£746.56
NO VALVES NEEDED	XXX		£0.00

STEP 5
SELECT DIRECTIONAL CONTROL VALVE

EG:
XXX
£0.00

ADD ON EXTRAS	COSTING CODE	PRICE
PRESSURE GAUGE 0-1000PSI PLUS ISOLATOR	PG1	£35.55
PRESSURE GAUGE 0-2000PSI PLUS ISOLATOR	PG2	£35.55
PRESSURE GAUGE 0-3000PSI PLUS ISOLATOR	PG3	£35.55
PRESSURE GAUGE 0-4000PSI PLUS ISOLATOR	PG4	£35.55
PRESSURE GAUGE 0-6000PSI PLU S ISOLATOR	PG6	£35.55
PRESSURE GAUGE 0-10000PSI PLUS ISOLATOR	PG7	£35.55
NOT REQUIRED	XXX	£0.00

STEP 6
SELECT EXTRAS

EG:
XXX
£0.00

ALL POWER PACKS ARE FULLY ASSEMBLED AND TESTED
ISSUED WITH 12 MONTHS WARRANTY FROM INVOICE DATE

★★ PRICE PROMISE ★★

Need more equipment on your power unit. Just select the items you need from our catalogue, add them to your powerpack and take off the relevant discount to arrive at your nett price.

FULL ORDER NUMBER FOR EXAMPLE SHOWN
HF6001 D 32 NG6S NG6D XXX XXX

TOTAL COST OF EXAMPLE SHOWN
£6238.30

FLOWFIT

FOR HYDRAULIC TANKS **SEE STEEL & STAINLESS STEEL OIL TANKS SECTION**	FOR FILLER BREATHERS **SEE FILTRATION SECTION**	FOR LEVEL INDICATORS **SEE FILTRATION SECTION**	FOR RETURN LINE FILTERS **SEE FILTRATION SECTION**	FOR CARTRIDGE VALVES **SEE HYDRAULIC CARTRIDGE VALVES SECTION**	FOR PRESSURE FILTERS **SEE FILTRATION SECTION**	FOR CETOP VALVES **SEE HYDRAULIC CETOP VALVES SECTION**

HF 500 DIMENSIONS

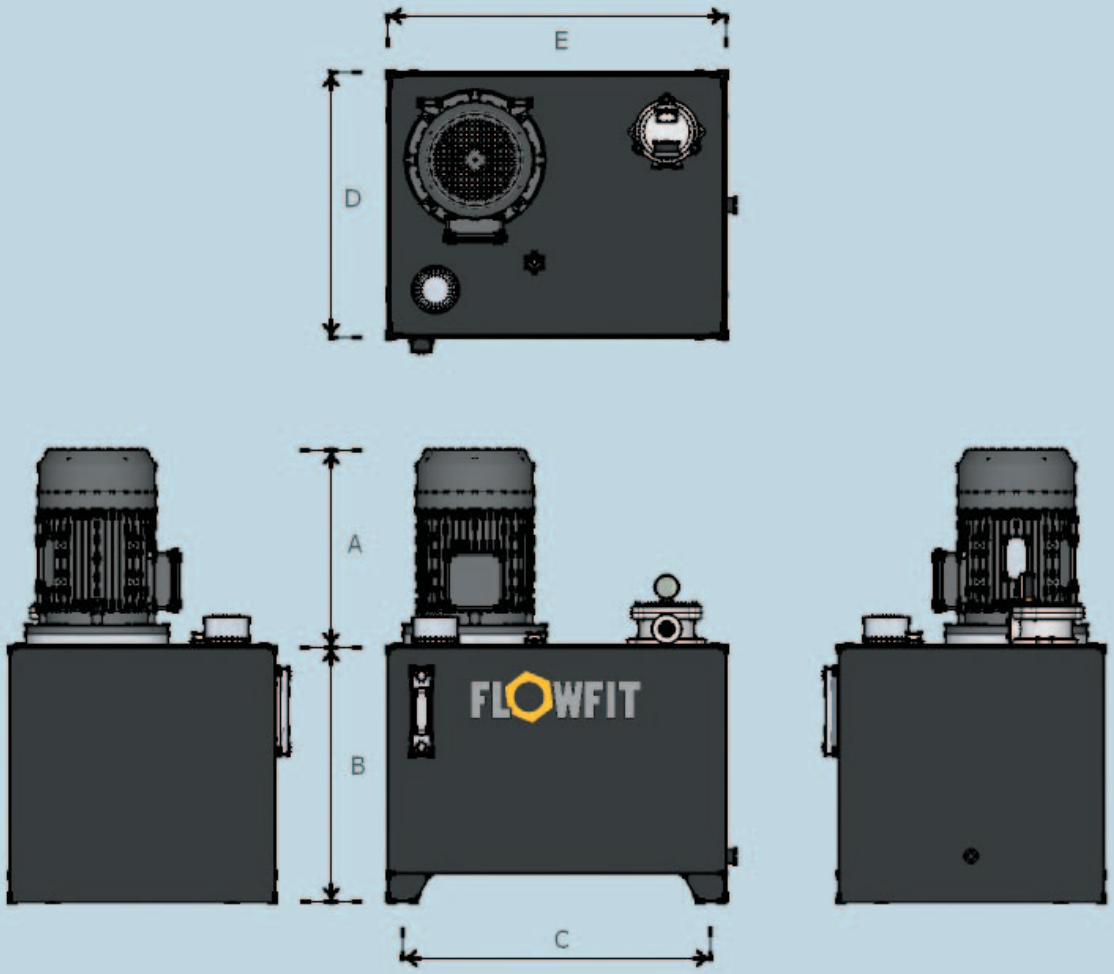

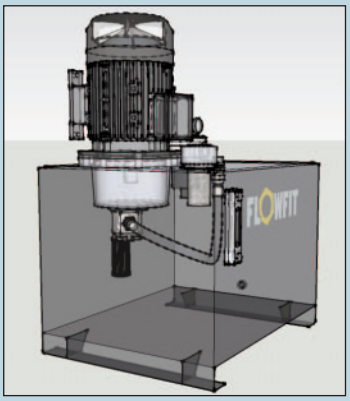

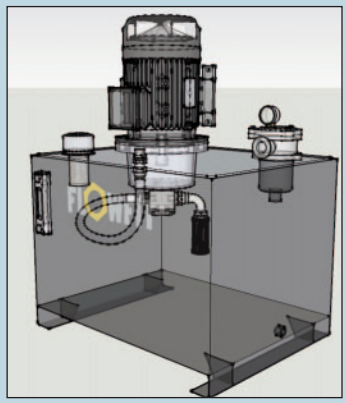

TANK DIMENSIONS				
TANK CAPACITY	B	C	D	E
39 Litre	335	428	375	470
58 Litre	365	548	470	600
75 Litre	455	548	470	600
100 Litre	505	625	520	675
165 Litre	555	755	620	805
200 Litre	560	820	640	900
250 Litre	580	930	690	1010
300 Litre	580	1070	700	1150
400 Litre	580	1434	735	1514
630 Litre	770	1434	945	1514

THREE PHASE ELECTRIC MOTOR DIMENSION		
MOTOR	FRAME	A
2.2-4.0 KW	D100/D112	326/335
5.5-7.5 KW	D132	305/420
11-15 KW	D160	510
18.5-22 KW	D180	590
30 KW	D200	660
37-45 KW	D225	705
55 KW	D250	730

SINGLE PHASE ELECTRIC MOTOR DIMENSION		
MOTOR	FRAME	A
2.2	D100	320
3 KW	D112	340

UP50 MINI-FLOW HYDRAULIC POWER PACK FLOWFIT

BUCHER HYDRAULICS

The UP50 series of standard power packs is based on a range of12vdc,24vdc,48vdc, 240v 1 phase and 415v 3 phase motors from 0.12kw to 2.2kw.

Supplied fully assembled and tested, these units offer pressures up to 230 bar and flows up to 4.75lpm.

All components in stock ready to assemble for immediate delivery.

Mini hydraulic powerunits offering mini flows suitable for single acting, double acting, and fully reversible circuits.

Pumps: 0.25cc/rev-2.3cc/rev
Flows: from 0.25 litre up to 4.75 l/min
Working pressures: up to 230 bar.
Tanks: 0.5litre up to 4 litre.

Electric motors
12vdc: 350w-2000w
24vdc: 400w-2500w
48vdc: 2000w
220/240v/ac: 120w-750w
415v: 120w-750w
110V: 120w-750w

All UP50 assembled powerunits come complete as standard with the following components.

- Electric motor DC/AC
- Bucher gear pump.
- Bucher central housing
- Main relief valve
- Check valve
- Drive coupling
- Motor flange
- Suction Filter 216 micron
- Return filter conveyor 150 micron

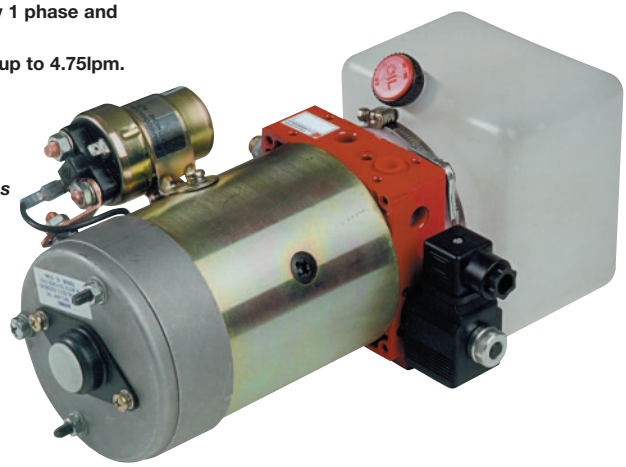

TO GENERATE YOUR FULL ORDER NUMBER SELECT THE COSTING CODE OR EACH COMPONENT

COSTING CODE 12VDC MOTOR	FLOW L/MIN	MAX PRESS BAR	MOTOR SIZE KW	MOTOR TYPE	PRICE
UP50/1	0.75	200	350w	12vdc	£683.34
UP50/2	1.3	200	350w	12vdc	£683.34
UP50/3	1.5	200	350w	12vdc	£683.34
UP50/4	2	150	350w	12vdc	£683.34
UP50/5	2.5	125	350w	12vdc	£683.34
UP50/6	3.7	75	350w	12vdc	£683.34
12VDC MOTOR					
UP50/7	1.2	200	800w	12vdc	£683.34
UP50/8	2.2	200	800w	12vdc	£683.34
UP50/9	2.6	200	800w	12vdc	£683.34
UP50/10	2.8	200	800w	12vdc	£683.34
UP50/11	3	200	800w	12vdc	£683.34
UP50/12	3.5	160	800w	12vdc	£683.34
12VDC MOTOR					
UP50/13	1.2	200	2000w	12vdc	£683.34
UP50/14	2	200	2000w	12vdc	£683.34
UP50/15	2.5	200	2000w	12vdc	£683.34
UP50/16	3	200	2000w	12vdc	£683.34
UP50/17	3.75	200	2000w	12vdc	£683.34
UP50/18	4.75	175	2000w	12vdc	£683.34
24VDC MOTOR					
UP50/19	1	200	400w	24vdc	£683.34
UP50/20	1.25	200	400w	24vdc	£683.34
UP50/21	1.6	175	400w	24vdc	£683.34
UP50/22	2.2	150	400w	24vdc	£683.34
UP50/23	3	125	400w	24vdc	£683.34
UP50/24	4.4	75	400w	24vdc	£683.34
24VDC MOTOR					
UP50/28	2.75	175	900w	24vdc	£820.01
UP50/29	3	175	900w	24vdc	£820.01
24VDC MOTOR					
UP50/31	1	200	2200w	24vdc	£863.74
UP50/32	1.75	200	2200w	24vdc	£863.74
UP50/33	2.25	200	2200w	24vdc	£863.74
UP50/34	2.75	200	2200w	24vdc	£863.74
UP50/35	3.5	200	2200w	24vdc	£863.74
UP50/36	4.4	200	2200w	24vdc	£863.74
240VAC UNIT 4 POLE MOTOR					
UP50/37	0.37	165	120w	240vac	£446.46
UP50/38	0.75	120	180w	240vac	£446.46
UP50/39	1.12	110	250w	240vac	£446.46
UP50/40	1.35	140	370w	240vac	£464.66
UP50/41	1.35	210	750w	240vac	£541.21
UP50/42	2.4	115	550w	240vac	£522.98
UP50/43	3.45	110	750w	240vac	£541.21
415VAC UNIT 4 POLE MOTOR					
UP50/44	0.37	165	120w	415vac	£459.20
UP50/45	0.75	120	180w	415vac	£459.20
UP50/46	1.12	110	250w	415vac	£459.20
UP50/47	1.35	140	370w	415vac	£464.66
UP50/48	1.35	210	750W	415vac	£541.21
UP50/49	2.4	115	550w	415vac	£510.23
UP50/50	3.45	110	750w	415vac	£541.21
48VDC UNIT					
48VDC UNITS	ADD TO 24VDC PRICES ABOVE				£182.22

EXAMPLE

STEP 1

SELECT MOTOR

EG:
UP50/44
£459.09

CONTINUED ON NEXT PAGE

50% OFF ALL PRICES

COSTING CODE	CIRCUIT TYPES	PRICE
K17	P AND T threaded ports 1/4"bsp	£0.00
K03	Double acting circuit arranged with subplate for electro valve mounting.(Valves not included.)	£0.00
K41	Single acting circuit (Valve not included)	£0.00
K50	Reversible circuit c/w double pilot check valve and dual port relief included.	£264.23

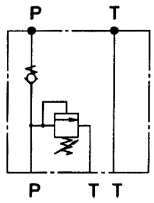

K17

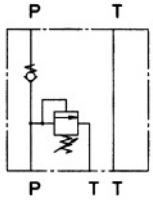

K03

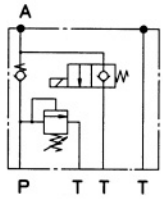

K41

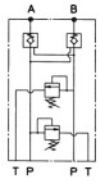

K50

MANUAL COSTING CODE	CONTROL VALVES	PRICE
ZR817/22TV	Manual release valve screw in type (K41 only)	£156.55
ZRZR817/22TVMS	Manual lever control c/w safety lock and microswitch (K41)	£198.62
SOLENOID		
NOV******	Normally open valve for single acting any voltage.(K41 only)	£194.99
NCV******	Normally closed valve for single acting any voltage.(K41 only)	£153.06
6013SOL	One double or single electro valve c/w manifold.(K03 only)	£402.72
6023SOL	Two double and/or single electro valves c/w manifold. (K03 only)	£725.26
XXX	Not required	£0.00
EXTRAS		
VRC	Throttle compensated flow valve (K41 only)	£32.05
SMB	Steel mounting bracket for fitting to housing.	£17.31
DCM	Plastic motor cover for DC motors.	£30.07
******= 12vdc,24vdc,24vac,110vac and 220vac		

COSTING CODE	RESERVOIR SIZES	PRICE
XXX	NO TANK FITTED FLANGE KIT ONLY SUPPLIED	£11.84
0.5L	0.5 LITRE PLASTIC	£34.63
1L	1 LITRE PLASTIC	£40.08
1.5L	1.5 LITRE PLASTIC	£43.73
1.6L	1.6 LITRE PLASTIC	£48.28
2.5L	2.5 LITRE PLASTIC	£56.77
4L	4 LITRE PLASTIC	£63.78

COSTING CODE	ORIENTATION	PRICE
HOR	HORIZONTAL	£0.00
VER	VERTICAL	£0.00

Download a full pdf technical catlaogue on the Bucher UP50 range at www.flowfitonline.co.uk

ALL POWER PACKS ARE FULLY ASSEMBLED AND TESTED
ISSUED WITH 12 MONTHS WARRANTY FROM INVOICE DATE

★★ PRICE PROMISE ★★
Need more equipment on your power unit.
Just select the items you need from our catalogue, add them to your powerpack and take off the relevant discount to arrive at your nett price.

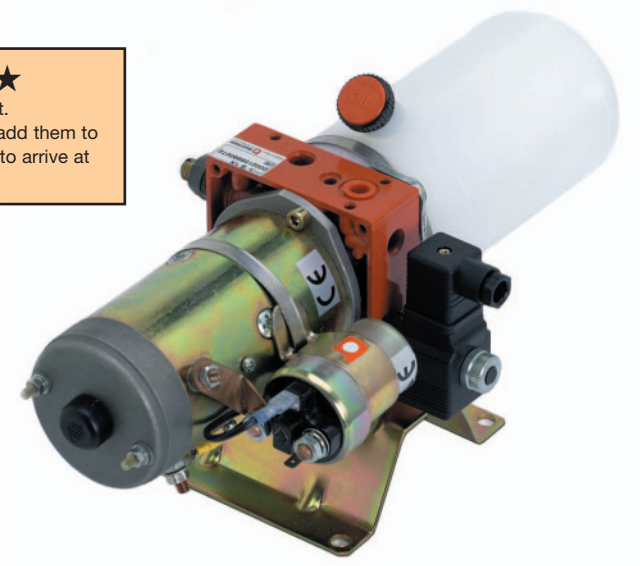

BUCHER HYDRAULICS

STEP 2
SELECT CIRCUIT TYPE
EG:
K17
£0.00

STEP 3
SELECT VALVES
EG:
XXX
£0.00

STEP 4
SELECT RESERVOIR
4L
£63.78

STEP 5
SELECT ORIENTATION
HOR
£0.00

FULL ORDER NUMBER FOR EXAMPLE SHOWN
UP50/44 K17 XXX 4L HOR

TOTAL COST OF EXAMPLE SHOWN
£522.98

ET-ELECTRIC DC MOTOR PUMP SET

FLOWFIT

BUCHER HYDRAULICS

The ET series of standard motor pump sets is based on a range of 12vdc, 24vdc and 48vdc electric motors.

Supplied fully assembled and tested. These units offer pressures up to 200 bar and flows up to 22.5lpm.

All components in stock ready to assemble for immediate delivery.

- Commonly referred to as an 'Emergency' or 'Backup' pump.
- Small electric DC motor pump unit to supply hydraulic power as flow and pressure to hydraulic circuits or as a system back up.
- The electro-motor-pumps are largely used on operating machines such as mobile machines,automotive applications,small truck mounted cranes,electro-hydraulic steering and where through simple valves and hose connections it is possible to operate and control different hydraulic actuators.
- All ET motor pump sets complete with DC Electric motor c/w relay,drive coupling, pump flange and a gear pump c/w bsp threaded ports.Unit supplied with a steel mounting flange.
- Used on applications where control valves are mounted away from the powerpack.
- Can be mounted in any position.
- Also available other pump and motor sizes from 0.8KW(800w) to 3KW(3000w).For all other input voltages 12vdc,24vdc or 48vdc and power ratings, and specific running times please download the ET pdf file or consult our sales department.
- Noise levels have been drastically reduced.
- Please note restricted running times apply check suitable for your application-continuous rated dc motors are available upon request.

12VDC FOR INTERMITTENT DUTY CYCLE. PART NUMBER	BUCHER CODING	FLOW L/MIN	MAX PRESS BAR	MOTOR SIZE KW	MOTOR TYPE	PRICE
ET/1.2/12VDC	T107E/R106/E45/AP100/1.2/319	4	200	1.7	12vdc	£544.86
ET/1.7/12VDC	T107E/R106/E45/AP100/1.7/319	4.5	175	1.7	12vdc	£544.86
ET/2.5/12VDC	T107E/R106/E45/AP100/2.5/319	9	150	1.7	12vdc	£544.86
ET/3.5/12VDC	T107E/R106/E45/AP100/3.5/319	9.5	100	1.7	12vdc	£544.86
ET/4.3/12VDC	T107E/R106/E45/AP100/4.3/319	12	75	1.7	12vdc	£544.86
ET/5/12VDC	T107E/R106/E45/AP100/5/319	13.5	75	1.7	12vdc	£544.86
ET/6.5/12VDC	T107E/R106/E45/AP100/6.5/319	17	50	1.7	12vdc	£550.32
ET/8/12VDC	T107E/R106/E45/AP1008/319	22.5	25	1.7	12vdc	£553.96

24VDC FOR INTERMITTENT DUTY CYCLE. PART NUMBER	BUCHER CODING	FLOW L/MIN	MAX PRESS BAR	MOTOR SIZE KW	MOTOR TYPE	PRICE
ET/1.2/24VDC	T109E/R209/E45/AP100/1.2/319	4	200	2.2	24vdc	£713.96
ET/1.7/24VDC	T109E/R209/E45/AP100/1.7/319	4.5	200	2.2	24vdc	£713.96
ET/2.5/24VDC	T109E/R209/E45/AP100/2.5/319	6	200	2.2	24vdc	£713.96
ET/3.5/24VDC	T109E/R209/E45/AP100/3.5/319	7	175	2.2	24vdc	£713.96
ET/4.3/24VDC	T109E/R209/E45/AP100/4.3/319	8	150	2.2	24vdc	£713.96
ET/5/24VDC	T109E/R209/E45/AP100/5/319	9	125	2.2	24vdc	£713.96
ET/6.5/24VDC	T109E/R209/E45/AP100/6.5/319	12.5	100	2.2	24vdc	£713.96
ET/8/24VDC	T1097E/R209/E45/AP1008/319	16	75	2.2	24vdc	£713.96

All motor pump sets above will deliver more flow at lower pressure.

24VDC FOR CONTINUOUS DUTY CYCLE. PART NUMBER	BUCHER CODING	FLOW L/MIN	MAX PRESS BAR	MOTOR SIZE KW	MOTOR TYPE	PRICE
ET/54/4.5/24VDC	ET/54/4.5/24VDC	8	150	2.2	24vdc	£1977.13
ET/54/6.5/24VDC	ET/54/6.5/24VDC	12.5	100	2.2	24vdc	£1977.13
ET/54/8.5/24VDC	ET/54/8.5/24VDC	16	75	2.2	24vdc	£1977.13

OPTIONAL EXTRAS		PRICE
RV	Relief valve fitted to the pump.	£171.30
SMB	Steel mounting bracket for fitting to housing.	£17.31
DCM	Plastic motor cover for DC motors.	£30.07

ALL POWER PACKS ARE FULLY ASSEMBLED AND TESTED • ISSUED WITH 12 MONTHS WARRANTY FROM INVOICE DATE

★★ PRICE PROMISE ★★

Need more equipment on your power unit. Just select the items you need from our catalogue, add them to your powerpack and take off the relevant discount to arrive at your nett price.

FOR HYDRAULIC TANKS **SEE STEEL & STAINLESS STEEL OIL TANKS SECTION**	FOR FILLER BREATHERS **SEE FILTRATION SECTION**	FOR LEVEL INDICATORS **SEE FILTRATION SECTION**	FOR RETURN LINE FILTERS **SEE FILTRATION SECTION**	FOR CARTRIDGE VALVES **SEE HYDRAULIC CARTRIDGE VALVES SECTION**	FOR PRESSURE FILTERS **SEE FILTRATION SECTION**	FOR CETOP VALVES **SEE HYDRAULIC CETOP VALVES SECTION**

HF800 HONDA PETROL ENGINE DRIVEN POWER PACKS

The HF700 series of petrol driven power packs is based on a range of Honda petrol engines from 2.6kw – 15.3kw on request.

Supplied fully assembled and tested, These units offer pressures up to 210 bar and flows up to 63 l/min on request.

All components in stock ready to assemble for immediate delivery.

Electric start models have a key start.

ALL POWER PACKS ARE FULLY ASSEMBLED AND TESTED
ISSUED WITH 12 MONTHS WARRANTY FROM INVOICE DATE

THE HF800 BASIC PETROL DRIVEN POWER PACKS CONSISTS OF:

- HONDA AIR COOLED 4 STROKE OHV PETROL ENGINE
- GALTECH GEAR PUMP
- FLOWFIT BELL HOUSING AND DRIVE COUPLING
- IKRON TANK TOP RETURN LINE FILTER 10 MICRON C/W VISUAL INDICATOR
- FLOWFIT 45 LITRE RESERVOIR C/W REMOVEABLE LID
- IKRON FILLER BREATHER AND IKRON SUCTION STRAINER 125 MICRON
- FILTREC LEVEL AND TEMP INDICATOR
- PRESSURE GAUGE
- ASSEMBLED,MOUNTED ON A FRAME AND TESTED
- PAINTED BLACK

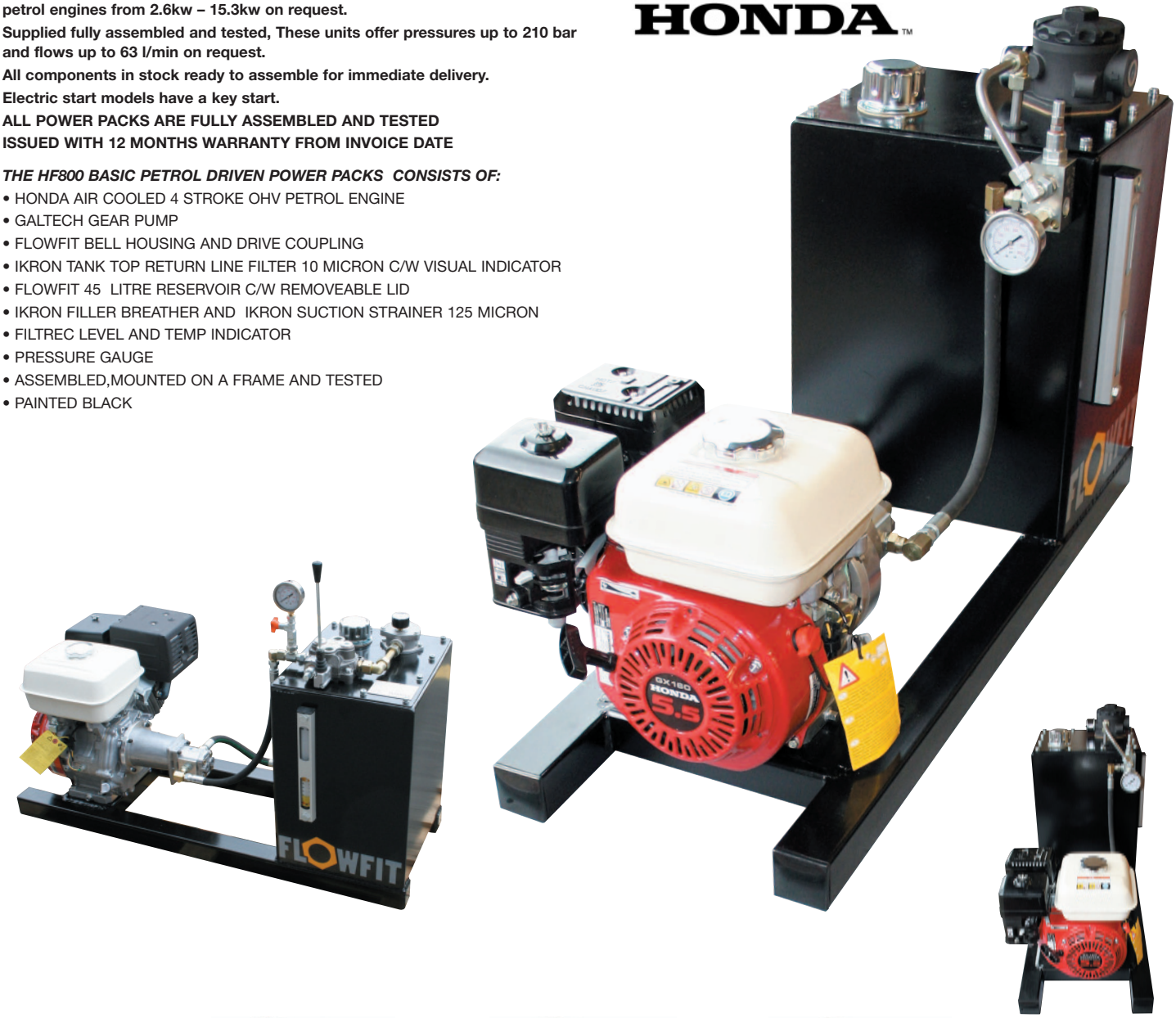

HONDA GX160

HONDA GX270

HONDA GX390

TO GENERATE YOUR FULL ORDER NUMBER SELECT THE COSTING CODE OR EACH COMPONENT

PART NO	HONDA ENGINE TYPE	KW 3600 RPM	HP 3600 RPM	ENGINE START	PERFORMANCE L/MIN @ PSI	PUMP TYPE	OIL ALERT YES / NO	DIMENSIONS L X W X H (MM)	PRICE
ZZ001754	GX160UT1QX4	2.6	5.5	PULL	10.5 L/MIN @ 3000PSI	GEAR	YES	1015 x 385 x 600	£2356.00
ZZ001758	GX270UT2QXQ4	3.6	9.5	PULL	19.5 L/MIN @ 1500PSI	GEAR	YES	1015 x 385 x 600	£2836.81
ZZ001760	GX390UT2QXQ4	5.3	13	PULL	24 L/MIN @ 1500PSI	GEAR	YES	1015 x 385 x 600	£3558.04

EXAMPLE

STEP 1

SELECT ENGINE TYPE

EG:
ZZ001754
£2,356.00

IF YOU NEED HIGHER FLOWS AND PRESSURES PLEASE ASK

COSTING CODE	ADD ON EXTRAS	PRICE
PG1	PRESSURE GAUGE 0-1000PSI PLUS ISOLATOR	£35.55
PG2	PRESSURE GAUGE 0-2000PSI PLUS ISOLATOR	£35.55
PG4	PRESSURE GAUGE 0-4000PSI PLUS ISOLATOR	£35.55
PG6	PRESSURE GAUGE 0-6000PSI PLUS ISOLATOR	£35.55
XXX	NOT REQUIRED	£0.00

STEP 2
SELECT ADD ON EXTRAS
EG:
PG4
£32.92

CETOP 3 M/FOLD PART NO REF	COSTING CODE	PART NO	PRICE
CETOP 3 1STN M/FOLD	31	105161/1	£112.71
CETOP 3 2STN M/FOLD	32	105161/2	£166.55
CETOP 3 3STN M/FOLD	33	105161/3	£214.09
CETOP 3 4STN M/FOLD	34	105161/4	£301.86
NO MANIFOLD NEEDED	XXX		£0.00

STEP 3
SELECT CETOP 3 MANIFOLD
EG:
XXX
£0.00

CETOP 3 VALVES 315 BAR MAX PRESSURE	COSTING CODE	PRICE
NG 6 D/ACTING VALVE	NG6D	£173.12
NG 6 S/ACTING VALVE	NG6S	£123.90
NO VALVES NEEDED	XXX	£0.00

STEP 4
SELECT CETOP 3 VALVES
EG:
XXX
£0.00

45LTR DIRECTIONAL CONTROL VALVE 400 BAR MAX PRESSURE HDM11P/HDM11S	COSTING CODE	PART NO	PRICE
3/8" 1 BANK D/ACTING S/RETURN VALVE	P1	HDM140/1	£147.00
3/8" 2 BANK D/ACTING S/RETURN VALVE	P2	HDM11P/2	£289.69
3/8" 3 BANK D/ACTING S/RETURN VALVE	P3	HDM11P/3	£377.60
3/8" 4 BANK D/ACTING S/RETURN VALVE	P4	HDM11P/4	£465.52
3/8" 5 BANK D/ACTING S/RETURN VALVE	P5	HDM11P/5	£575.06
3/8" 6 BANK D/ACTING S/RETURN VALVE	P6	HDM11P/6	£691.79
1/2" 1 BANK D/ACTING S/RETURN VALVE	S1	HDM11S/1	£240.68
1/2" 2 BANK D/ACTING S/RETURN VALVE	S2	HDM11S/2	£331.47
1/2" 3 BANK D/ACTING S/RETURN VALVE	S3	HDM11S/3	£439.58
1/2" 4 BANK D/ACTING S/RETURN VALVE	S4	HDM11S/4	£536.15
1/2" 5 BANK D/ACTING S/RETURN VALVE	S5	HDM11S/5	£638.47
1/2" 6 BANK D/ACTING S/RETURN VALVE	S6	HDM11S/6	£746.56
NO VALVES NEEDED	XXX		£0.00

STEP 5
SELECT DIRECTIONAL CONTROL VALVE
EG:
XXX
£0.00

FULL ORDER NUMBER FOR EXAMPLE SHOWN
ZZ001754-PG4-XXX -XXX-XXX

TOTAL COST OF EXAMPLE SHOWN
£2,391.55

★★ PRICE PROMISE ★★

Need more equipment on your power unit. Just select the items you need from our catalogue, add them to your powerpack and take off the relevant discount to arrive at your nett price.

FLOWFIT

HATZ DIESEL

FOR HYDRAULIC CONTROL VALVES **SEE HYDRAULIC CONTROL VALVES SECTION**	FOR CETOP VALVES **SEE HYDRAULIC CETOP VALVES SECTION**	FOR CARTRIDGE VALVES **SEE HYDRAULIC CARTRIDGE VALVES SECTION**	FOR SOLENOID VALVES **SEE HYDRAULIC CONTROL VAVLES SECTION**
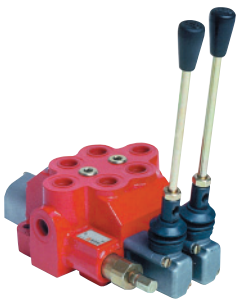		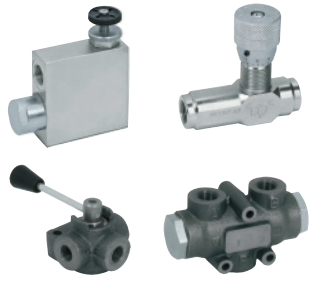	

HF700 PETROL ENGINE DRIVEN POWER PACKS

The HF700 series of petrol driven power packs is based on a range of Loncin petrol engines from 2.6kw – 15.3kw on request.
Supplied fully assembled and tested, These units offer pressures up to 210 bar and flows up to 63 l/min on request.
All components in stock ready to assemble for immediate delivery.
Electric start models have a key start.
ALL POWER PACKS ARE FULLY ASSEMBLED AND TESTED
ISSUED WITH 12 MONTHS WARRANTY FROM INVOICE DATE

THE HF700 BASIC PETROL DRIVEN POWER PACKS CONSISTS OF:

- LONCIN AIR COOLED 4 STROKE OHV PETROL ENGINE
- GALTECH GEAR PUMP
- FLOWFIT BELL HOUSING AND DRIVE COUPLING
- IKRON TANK TOP RETURN LINE FILTER 10 MICRON C/W VISUAL INDICATOR
- FLOWFIT 45 LITRE RESERVOIR C/W REMOVEABLE LID
- IKRON FILLER BREATHER AND IKRON SUCTION STRAINER 125 MICRON
- FILTREC LEVEL AND TEMP INDICATOR
- PRESSURE GAUGE
- ASSEMBLED,MOUNTED ON A FRAME AND TESTED
- PAINTED BLACK

LONCIN G160FQ

LONCIN G270FQ

LONCIN G390FQ

TO GENERATE YOUR FULL ORDER NUMBER SELECT THE COSTING CODE OR EACH COMPONENT

PART NO	LONCIN ENGINE TYPE	KW 3600 RPM	HP 3600 RPM	ENGINE START	PERFORMANCE L/MIN @ PSI	PUMP TYPE	OIL ALERT YES / NO	DIMENSIONS L X W X H (MM)	PRICE
ZZ001362	G160FQ	4	5.5	PULL	10.5 L/MIN @ 3000PSI	GEAR	YES	1015 x 385 x 600	£2,043.47
ZZ001758	G270FQ	6.7	9.5	PULL	19.5 L/MIN @ 1500PSI	GEAR	YES	1015 x 385 x 600	£2,259.84
ZZ001760	G390FQ	9.7	13	PULL	24 L/MIN @ 1500PSI	GEAR	YES	1015 x 385 x 600	£2,343.98

EXAMPLE

STEP 1

SELECT ENGINE TYPE

EG:
ZZ001362
£2,043.47

IF YOU NEED HIGHER FLOWS AND PRESSURES PLEASE ASK

COSTING CODE	ADD ON EXTRAS	PRICE
PG1	PRESSURE GAUGE 0-1000PSI PLUS ISOLATOR	£35.55
PG2	PRESSURE GAUGE 0-2000PSI PLUS ISOLATOR	£35.55
PG4	PRESSURE GAUGE 0-4000PSI PLUS ISOLATOR	£35.55
PG6	PRESSURE GAUGE 0-6000PSI PLUS ISOLATOR	£35.55
XXX	NOT REQUIRED	£0.00

STEP 2
SELECT ADD ON EXTRAS
EG:
PG4
£32.92

CETOP 3 M/FOLD PART NO REF	COSTING CODE	PART NO	PRICE
CETOP 3 1STN M/FOLD	31	105161/1	£112.81
CETOP 3 2STN M/FOLD	32	105161/2	£166.55
CETOP 3 3STN M/FOLD	33	105161/3	£214.09
CETOP 3 4STN M/FOLD	34	105161/4	£301.86
NO MANIFOLD NEEDED	XXX		£0.00

STEP 3
SELECT CETOP 3 MANIFOLD
EG:
XXX
£0.00

CETOP 3 VALVES 315 BAR MAX PRESSURE	COSTING CODE	PRICE
NG 6 D/ACTING VALVE	NG6D	£173.12
NG 6 S/ACTING VALVE	NG6S	£123.90
NO VALVES NEEDED	XXX	£0.00

STEP 4
SELECT CETOP 3 VALVES
EG:
XXX
£0.00

45LTR DIRECTIONAL CONTROL VALVE 400 BAR MAX PRESSURE HDM11P/HDM11S	COSTING CODE	PART NO	PRICE
3/8" 1 BANK D/ACTING S/RETURN VALVE	P1	HDM140/1	£147.00
3/8" 2 BANK D/ACTING S/RETURN VALVE	P2	HDM11P/2	£289.69
3/8" 3 BANK D/ACTING S/RETURN VALVE	P3	HDM11P/3	£377.60
3/8" 4 BANK D/ACTING S/RETURN VALVE	P4	HDM11P/4	£465.52
3/8" 5 BANK D/ACTING S/RETURN VALVE	P5	HDM11P/5	£575.06
3/8" 6 BANK D/ACTING S/RETURN VALVE	P6	HDM11P/6	£691.79
1/2" 1 BANK D/ACTING S/RETURN VALVE	S1	HDM11S/1	£240.68
1/2" 2 BANK D/ACTING S/RETURN VALVE	S2	HDM11S/2	£331.47
1/2" 3 BANK D/ACTING S/RETURN VALVE	S3	HDM11S/3	£446.45
1/2" 4 BANK D/ACTING S/RETURN VALVE	S4	HDM11S/4	£536.15
1/2" 5 BANK D/ACTING S/RETURN VALVE	S5	HDM11S/5	£638.47
1/2" 6 BANK D/ACTING S/RETURN VALVE	S6	HDM11S/6	£746.56
NO VALVES NEEDED	XXX		£0.00

STEP 5
SELECT DIRECTIONAL CONTROL VALVE
EG:
XXX
£0.00

FULL ORDER NUMBER FOR EXAMPLE SHOWN
ZZ001362-PG4-XXX -XXX-XXX

TOTAL COST OF EXAMPLE SHOWN
£2079.02

★★ PRICE PROMISE ★★

Need more equipment on your power unit. Just select the items you need from our catalogue, add them to your powerpack and take off the relevant discount to arrive at your nett price.

FLOWFIT

FOR HYDRAULIC CONTROL VALVES **SEE HYDRAULIC CONTROL VALVES SECTION**	FOR CETOP VALVES **SEE HYDRAULIC CETOP VALVES SECTION**	FOR CARTRIDGE VALVES **SEE HYDRAULIC CARTRIDGE VALVES SECTION**	FOR SOLENOID VALVES **SEE HYDRAULIC CONTROL VAVLES SECTION**
		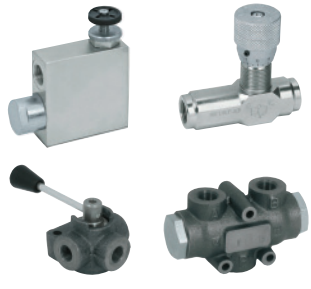	

HF900 HATZ DIESEL ENGINE DRIVEN POWER PACKS

The HF900 series of diesel driven power packs is based on a range of HATZ diesel engines from 7.4kw – 50kw on request.
Supplied fully assembled and tested, These units canoffer pressures up to 350 bar and flows up to 250 l/min on request.
All components in stock ready to assemble for immediate delivery.
ALL POWER PACKS ARE FULLY ASSEMBLED PRIOR TO DESPATCH.
ISSUED WITH 12 MONTHS WARRANTY FROM INVOICE DATE

THE HF900 BASIC DIESEL DRIVEN POWER PACKS CONSISTS OF:

- HATZ SINGLE CYLINDER DIESEL ENGINE
- GALTECH GEAR PUMP
- FLOWFIT BELL HOUSING AND DRIVE COUPLING
- IKRON TANK TOP RETURN LINE FILTER 10 MICRON C/W VISUAL INDICATOR
- FLOWFIT 45 LITRE RESERVOIR C/W REMOVEABLE LID
- IKRON FILLER BREATHER AND IKRON SUCTION STRAINER 125 MICRON
- FILTREC LEVEL AND TEMP INDICATOR
- PRESSURE GAUGE
- ASSEMBLED,MOUNTED ON A FRAME AND TESTED
- PAINTED BLACK
- COMPLETE WITH DOUBLE ACTING VALVE, BUCHER HDM140 C/W MAIN RELIEF, DOUBLE ACTING SPOOL C/W 3 POSITION SPRING RETURN AND LEVER OPERATED

HATZ 1D50Z

HATZ 2G40

TO GENERATE YOUR FULL ORDER NUMBER SELECT THE COSTING CODE OR EACH COMPONENT

PART NO	HATZ ENGINE TYPE	KW 3600 RPM	HP 3600 RPM	ENGINE START	PERFORMANCE L/MIN @ PSI	PUMP TYPE	OIL ALERT YES / NO	DIMENSIONS L X W X H (MM)	PRICE
ZZ001422	1D50Z	7.5	10	*HANDLE	18 L/MIN @ 2900PSI	GEAR	YES	1015 x 385 x 600	£5037.12
ZZ001640	2G40	14.7	19.7	12 VOLT	36 L/MIN @ 2900PSI	GEAR	YES	1015 x 385 x 600	£9158.40

*12V START AVAILABLE ON REQUEST

EXAMPLE

STEP 1

SELECT ENGINE TYPE

EG:
ZZ001422
£5037.12

IF YOU NEED HIGHER FLOWS AND PRESSURES PLEASE ASK, DIESEL ENGINES AVAILABLE UP TO 60KW

COSTING CODE	ADD ON EXTRAS	PRICE
PG1	PRESSURE GAUGE 0-1000PSI PLUS ISOLATOR	£35.55
PG2	PRESSURE GAUGE 0-2000PSI PLUS ISOLATOR	£35.55
PG4	PRESSURE GAUGE 0-4000PSI PLUS ISOLATOR	£35.55
PG6	PRESSURE GAUGE 0-6000PSI PLUS ISOLATOR	£35.55
XXX	NOT REQUIRED	£0.00

STEP 2
SELECT ADD ON EXTRAS
EG:
PG4
£32.92

CETOP 3 M/FOLD PART NO REF	COSTING CODE	PART NO	PRICE
CETOP 3 1STN M/FOLD	31	105161/1	£112.71
CETOP 3 2STN M/FOLD	32	105161/2	£166.55
CETOP 3 3STN M/FOLD	33	105161/3	£214.09
CETOP 3 4STN M/FOLD	34	105161/4	£301.86
NO MANIFOLD NEEDED	XXX		£0.00

STEP 3
SELECT CETOP 3 MANIFOLD
EG:
XXX
£0.00

CETOP 3 VALVES 315 BAR MAX PRESSURE	COSTING CODE	PRICE
NG 6 D/ACTING VALVE	NG6D	£173.12
NG 6 S/ACTING VALVE	NG6S	£123.90
NO VALVES NEEDED	XXX	£0.00

STEP 4
SELECT CETOP 3 VALVES
EG:
XXX
£0.00

45LTR DIRECTIONAL CONTROL VALVE 400 BAR MAX PRESSURE HDM11P/HDM11S	COSTING CODE	PART NO	PRICE
3/8" 1 BANK D/ACTING S/RETURN VALVE	P1	HDM140/1	£147.00
3/8" 2 BANK D/ACTING S/RETURN VALVE	P2	HDM11P/2	£289.69
3/8" 3 BANK D/ACTING S/RETURN VALVE	P3	HDM11P/3	£377.60
3/8" 4 BANK D/ACTING S/RETURN VALVE	P4	HDM11P/4	£465.52
3/8" 5 BANK D/ACTING S/RETURN VALVE	P5	HDM11P/5	£575.06
3/8" 6 BANK D/ACTING S/RETURN VALVE	P6	HDM11P/6	£691.79
1/2" 1 BANK D/ACTING S/RETURN VALVE	S1	HDM11S/1	£240.68
1/2" 2 BANK D/ACTING S/RETURN VALVE	S2	HDM11S/2	£331.47
1/2" 3 BANK D/ACTING S/RETURN VALVE	S3	HDM11S/3	£446.45
1/2" 4 BANK D/ACTING S/RETURN VALVE	S4	HDM11S/4	£536.13
1/2" 5 BANK D/ACTING S/RETURN VALVE	S5	HDM11S/5	£638.47
1/2" 6 BANK D/ACTING S/RETURN VALVE	S6	HDM11S/6	£746.56
NO VALVES NEEDED	XXX		£0.00

STEP 5
SELECT DIRECTIONAL CONTROL VALVE
EG:
XXX
£0.00

FULL ORDER NUMBER FOR EXAMPLE SHOWN
ZZ001422-PG4-XXX -XXX-XXX

TOTAL COST OF EXAMPLE SHOWN
£5072.67

★★ PRICE PROMISE ★★

Need more equipment on your power unit. Just select the items you need from our catalogue, add them to your powerpack and take off the relevant discount to arrive at your nett price.

FLOWFIT

HATZ DIESEL

FOR HYDRAULIC CONTROL VALVES **SEE HYDRAULIC CONTROL VALVES SECTION**	FOR CETOP VALVES **SEE HYDRAULIC CETOP VALVES SECTION**	FOR CARTRIDGE VALVES **SEE HYDRAULIC CARTRIDGE VALVES SECTION**	FOR SOLENOID VALVES **SEE HYDRAULIC CONTROL VAVLES SECTION**
		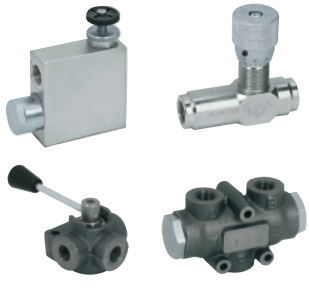	

CUSTOM BUILT POWER UNITS

CUSTOM BUILT POWER UNITS TO SUIT YOUR APPLICATIONS

Have a Flowfit custom built power unit to meet your exact requirements.

We can build power units for use in agricultural implements, sawmills, mining applications, quarries, compactors, landfills, material handling equipment, automotive plants, transportation, hanger door openers, man lifts, light industrial and wind turbine applications plus many more.

We can add a variety of custom features including DC backups for AC units, handpumps, explosion proof motors, oil coolers, heat exchangers, oil heaters, solenoid or manual valves, kidney loop filtration, offline filtration, tandem and triple pumps and two stage pumps.

Our Flowfit Power Unit Technical Support Team are here to assist you with all your power unit needs.

Give us a call today for assistance with any questions you may have.

For a no-obligation priced quotation please complete this form.

Fax: 0044 1584 876044
Email: sales@flowfitonline.com

FLOWFIT CUSTOM BUILT WORKSHEET

Customer Name .....

Company Name .....

Address .....

Town/City ..... County .....

Postcode ..... Country .....

Phone ..... Fax .....

Email ..... Website .....

Mobile .....

Description of Application

Hydraulic schematic or hose layout

PLEASE ENTER THE DETAILS YOU KNOW AS A STARTING POINT

PLEASE ENTER THE DETAILS YOU KNOW AS A STARTING POINT

POWER SOURCE

PETROL ☐ _____ HP _____ KW DIESEL ☐ _____ HP _____ KW

ELECTRIC MOTOR ☐ _____ phase _____ voltage

_____ Hz ☐ AC _____ DC

PHASE ☐ Single ☐ Three

FLOW REQUIRED _____ Gallons _____ Litres

FLUID BEING USED _____

SPEED FOR ADVISED FLOW REQUIREMENT _____ RPM

PRESSURE REQUIRED _____ PSI _____ BAR

SPECIAL COMMENTS OR NEEDS:

_____

TANK/RESERVOIR SIZE

SIZE REQUIRED _____ LITRES _____ GALLONS

Please note we normally recommend anywhere from 3 to 10 times pump flow for correct tank sizing.

PHYSICAL SIZE OF CUSTOMISED TANK REQUIRED LENGTH _____

WIDTH _____

HEIGHT _____

PUMP TYPE

☐ VARIABLE DISPLACEMENT ☐ FIXED DISPLACEMENT

MAIN RELIEF

RELIEF SETTING REQUIRED _____ PSI RELIEF SETTING REQUIRED _____ BAR

DIRECTIONAL CONTROLS

☐ MANUAL ☐ SOLENOID ☐ VOLTAGE OF COILS

NUMBER OF SPOOLS _____

SPOOL ACTION ☐ CLOSED ☐ OPEN ☐ REGENERATIVE

☐ FLOAT ☐ TANDEM ☐ SPRING CENTRE ☐ DETENT

OTHER VALVES NEEDED

_____

_____

ACCESSORIES

☐ RETURN LINE FILTER ☐ PRESSURE FILTER

☐ PRESSURE GAUGE AND ISOLATOR _____ PRESSURE RANGE PSI

☐ COOLER REQUIRED _____ TYPE REQUIRED ☐ TANK OIL HEATER

IF OPERATING HYDRAULIC CYLINDERS PLEASE CONFIRM

BORE _____ mm ROD _____ mm STROKE _____ mm

SINGLE ACTING ☐ DOUBLE ACTING ☐ _____ TONNAGE FORCE REQUIRED.

IF CYLINDERS WORKING TOGETHER PLEASE ADVISE

_____

_____

TIME TO EXTEND _____ SECS TIME TO RETREAT _____ SECS

DO YOU REQUIRE SINGLE/DOUBLE PILOT CHECK VALVES ☐ DO YOU REQUIRE HOSE BURST VALVES ☐

IF OPERATING HYDRAULIC MOTORS PLEASE CONFIRM

SPEED OF MOTOR _____ RPM PRESSURE REQUIRED _____

THE ABOVE FORMS CONTIAN THE BASIC REQUIREMENTS TO ENABLE OUR FLOWFIT SUPPORT SPECIALIST TO PROCEED WITH A QUOTE.
WE WILL CONTACT YOU FOR FURTHER INFO REQUIRED.

Call 01584 876033 Fax 01584 876044 Email sales@flowfitonline.com

MOTOR PUMP SETS 240V & 415V

HYDRAULIC MOTOR PUMP SETS 240V AND 415V.....54

HYDRAULIC MOTOR PUMP SETS ARE DESIGNED TO ALLOW YOU TO MAKE UP YOUR OWN HYDRAULIC POWERPACK SETS AND CONSIST OF AN ELECTRIC MOTOR, HYDRAULIC GEAR PUMP, BELL HOUSING AND DRIVE COUPLING.

ELECTRIC MOTOR RATINGS AVAILIBLE AT 240V OR 415V CAPABLE OF POWER OUTPUTS RANGING BETWEEN 1.1Kw to 7.5kW WITH RESPECTIVE GEAR PUMP FLOW SPEEDS OF 3.6 LITRES/MINUTE TO 22 LITRES/MINUTE MAXIMISING PUMP EFFICIENCY.

FLOWFIT

HYDRAULIC MOTOR PUMP SETS 240V AND 415V

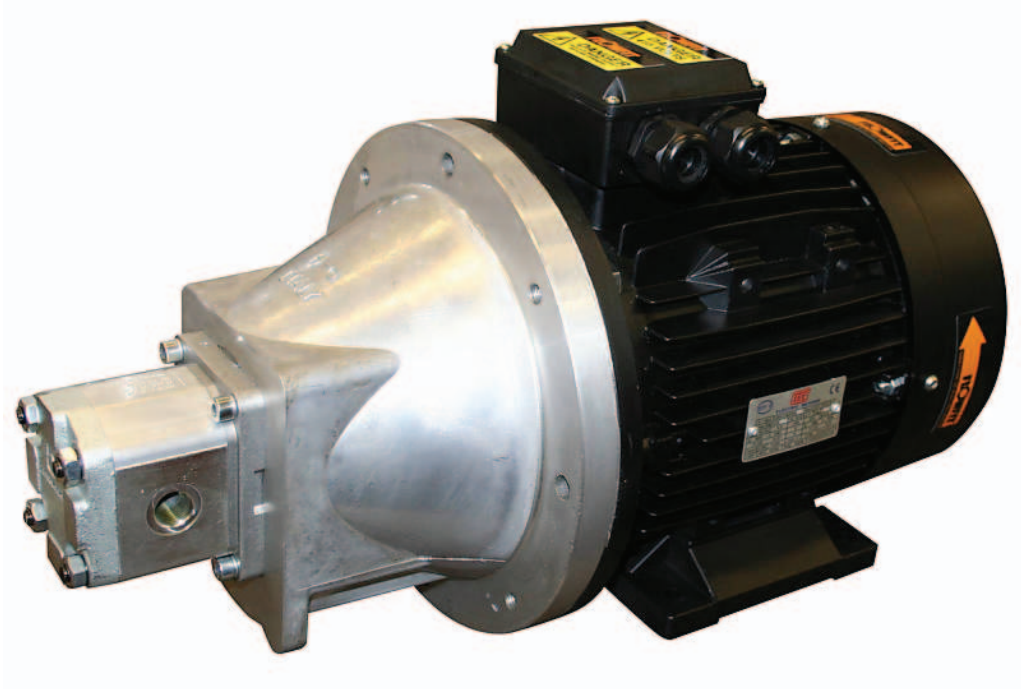

PART NO.	FLOW L/MIN	MAX. WORK BAR	PUMP SPEED CC/REV	MOTOR SPEC 50HZ-60HZ			ROTATION SPEED RPM	PRICE
				VOLTAGE V	POWER KW	PHASE		
ZZ001005	3.6	210	2.5	240	1.1	SINGLE	1450	£497.72
ZZ000130	5	210	3.2	240	2.2	SINGLE	1450	£569.08
ZZ000129	7.2	210	5.0	240	3.0	SINGLE	1450	£632.67
ZZ000119	5	210	3.2	415	2.2	3	1450	£448.77
ZZ000121	7.2	210	5.0	415	3.0	3	1450	£673.98
ZZ000122	9	210	6	415	4.0	3	1450	£650.79
ZZ000123	16	175	11	415	5.5	3	1450	£1033.05
ZZ000124	22	175	14	415	7.5	3	1450	£991.06

ASSEMBLED FROM STOCK ANY COMBINATION OF ELECTRIC MOTOR AND GEAR OR PISTON PUMP.
ALL SIZES OF ELECTRIC MOTORS AND PUMPS CATERED FOR, PLEASE ASK FOR DETAILS.

LONCIN 4 STROKE PETROL ENGINES

LONCIN 4 STROKE PETROL ENGINES 56

The Loncin range of 4 stroke air cooling petrol engines are an industry standard oil alert petrol engines which conform to all EEC regulations.

The engines come with standard foot spring mountings, a 3/4" Q type shaft with keyway, recoil start and oil alert.

Ideal as replacement petrol engines for all major brands.

FLOWFIT

LONCIN

LONCIN 4 STROKE PETROL ENGINES

For information on available engine HP please see part number description below.

These petrol engines are perfect for installations where no electrical power is available or conditions are not suitable to use electricity.

Example of ideal usage situations are:
Boatyards
Offshore applications
Boat applications
Mobile application
Agricultural applications
Industrial applications
Emergency power situations
Truck mounted applications
Log Splitters

PART NO.	HORSEPOWER HP	RECOIL START	ELECTRIC START	OIL ALERT	PRICE
LC154F	2.1	YES	NO	YES	£287.32
G120F-P	3.5	YES	NO	YES	£336.47
G160F-P	5.5	YES	NO	YES	£385.84
G200F-P	6.5	YES	NO	YES	£390.44
G270F-P	9	YES	NO	YES	£703.59
G340F-P	11	YES	NO	YES	£723.44
G390F-P	13	YES	NO	YES	£748.13
G420F-P	15	YES	YES	YES	£881.13
LC2V78FD	19.7	YES	YES	YES	£1,548.91

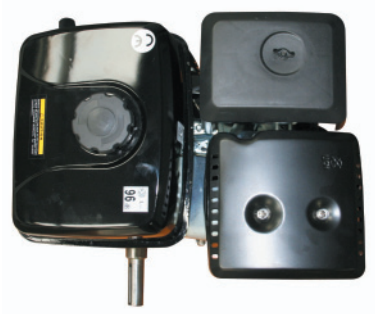

HATZ DIESEL ENGINES

HATZ 1B20 4.2HP DIESEL ENGINE WITH 12 VOLT START 58
HATZ 1B20 4.2HP DIESEL ENGINE WITH RECOIL START.....58
HATZ 1B30 6.3HP 4.6 KW DIESEL ENGINE WITH RECOIL START .58
HATZ 1B30 6.3HP DIESEL ENGINE WITH 12 VOLT START 59
HATZ 1B40 9.2HP DIESEL ENGINE WITH 12 VOLT START 59
HATZ 1B40 9.2HP DIESEL ENGINE WITH RECOIL START.....59
HATZ 1D50Z 10.2HP DIESEL ENGINE WITH 12 VOLT START 60
HATZ 1D50Z 10.2HP DIESEL ENGINE WITH HANDLE START 60
HATZ 1D81Z 13.7HP DIESEL ENGINE WITH 12 VOLT START 60
HATZ 1D81Z 13.7HP DIESEL ENGINE WITH HANDLE START 61
HATZ 2G40 20HP DIESEL ENGINE WITH 12 VOLT START 61
HATZ 2L41C 33.2 HP DIESEL ENGINE WITH 12 VOLT START 61
HATZ 3L41C 49.9 HP DIESEL ENGINE WITH 12 VOLT START 62
HATZ 4L41C 66.4 HP DIESEL ENGINE WITH 12 VOLT START 62

HATZ are manufacturers of environmentally friendly diesel engines from 1.5hp to 80hp (1.1kw to 60kw)
We can supply HATZ diesel engines on their own or as part of a specially designed hydraulic power pack for your system.

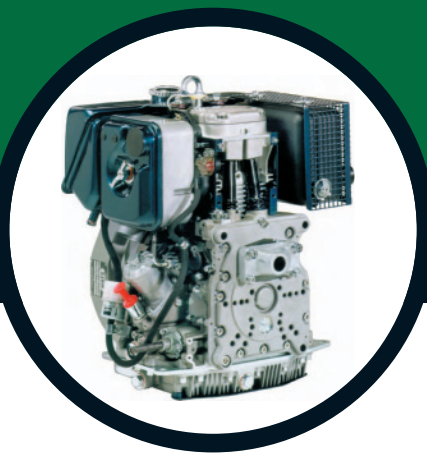

FLOWFIT

HATZ 1B20 4.2HP DIESEL ENGINE WITH 12 VOLT START

- HATZ 1B20 4.2 HP (3.1 KW) SINGLE CYLINDER DIESEL ENGINE, 12 VOLT ELECTRIC START.
- SHAFT DRIVE 23MM TAPER OR 3/4" INCH STRAIGHT 12 VOLT ELECTRIC START.
- COMES COMPLETE WITH FUEL TANK, AIR FILTER,SILENCER, RECOIL STARTER AND INSTRUMENT PANEL 12 VOLT.
- ALL ENGINES CAN BE FITTED WITH COMPLETE READY TO GO HYDRAULIC PUMPS AND VALVE SYSTEMS - ASK FOR DETAILS.

HATZ ARE MANUFACTURERS OF ENVIRONMENTALLY FRIENDLY DIESEL ENGINES FROM 1.5HP TO 80HP (1.1KW TO 6OKW).

HATZ ARE WORLD LEADERS IN QUIET, CLEAN, AIR-COOLED DIESEL ENGINES FOR THE FOLLOWING INDUSTRIES:

- CONSTRUCTION
- PUMPSET
- AGRICULTURE
- POWER GENERATION
- LIFT/ REACH TRUCK

PART NO.	DESCRIPTION	PRICE
ZZ002195	HATZ 1B20 4.2HP DIESEL ENGINE WITH 12 VOLT START	£2,831.66

HATZ 1B20 4.2HP DIESEL ENGINE WITH RECOIL START

- HATZ 1B20 4.2 HP (3.1 KW) SINGLE CYLINDER DIESEL ENGINE, RECOIL START
- SHAFT DRIVE 23MM TAPER OR 3/4" INCH STRAIGHT.
- COMES COMPLETE WITH FUEL TANK, AIR FILTER,SILENCER,RECOIL STARTER.
- ALL ENGINES CAN BE FITTED WITH COMPLETE READY TO GO HYDRAULIC PUMPS AND VALVE SYSTEMS - ASK FOR DETAILS.

HATZ ARE MANUFACTURERS OF ENVIRONMENTALLY FRIENDLY DIESEL ENGINES FROM 1.5HP TO 80HP (1.1KW TO 6OKW).

HATZ ARE WORLD LEADERS IN QUIET, CLEAN, AIR-COOLED DIESEL ENGINES FOR THE FOLLOWING INDUSTRIES:

- CONSTRUCTION
- PUMPSET
- AGRICULTURE
- POWER GENERATION
- LIFT/ REACH TRUCK

PART NO.	DESCRIPTION	PRICE
ZZ002194	HATZ 1B20 4.2HP DIESEL ENGINE WITH RECOIL START	£2,127.61

HATZ 1B30 6.3HP 4.6 KW DIESEL ENGINE WITH RECOIL START

- ATZ 1B30 6.3 HP (4.6 KW) SINGLE CYLINDER DIESEL ENGINE, RECOIL START
- SHAFT DRIVE 23MM TAPER OR 1" INCH STRAIGHT.
- COMES COMPLETE WITH FUEL TANK, AIR FILTER,SILENCER, RECOIL STARTER
- ALL ENGINES CAN BE FITTED WITH COMPLETE READY TO GO HYDRAULIC PUMPS AND VALVE SYSTEMS - ASK FOR DETAILS.

HATZ ARE MANUFACTURERS OF ENVIRONMENTALLY FRIENDLY DIESEL ENGINES FROM 1.5HP TO 80HP (1.1KW TO 6OKW).

HATZ ARE WORLD LEADERS IN QUIET, CLEAN, AIR-COOLED DIESEL ENGINES FOR THE FOLLOWING INDUSTRIES:

- CONSTRUCTION
- PUMPSET
- AGRICULTURE
- POWER GENERATION
- LIFT/ REACH TRUCK

PART NO.	DESCRIPTION	PRICE
ZZ002196	HATZ 1B30 6.3HP 4.6 KW DIESEL ENGINE WITH RECOIL START	£2,436.71

HATZ 1B30 6.3HP DIESEL ENGINE WITH 12 VOLT START

- HATZ 1B30 6.3 HP (4.6 KW) SINGLE CYLINDER DIESEL ENGINE 12 VOLT ELECTRIC START
- SHAFT DRIVE 23MM TAPER OR 1" INCH STRAIGHT.
- COMES COMPLETE WITH FUEL TANK, AIR FILTER,SILENCER, RECOIL STARTER AND INSTRUMENT PANEL
- ALL ENGINES CAN BE FITTED WITH COMPLETE READY TO GO HYDRAULIC PUMPS AND VALVE SYSTEMS - ASK FOR DETAILS.

HATZ ARE MANUFACTURERS OF ENVIRONMENTALLY FRIENDLY DIESEL ENGINES FROM 1.5HP TO 80HP (1.1KW TO 6OKW).

HATZ ARE WORLD LEADERS IN QUIET, CLEAN, AIR-COOLED DIESEL ENGINES FOR THE FOLLOWING INDUSTRIES:

- CONSTRUCTION
- PUMPSET
- AGRICULTURE
- POWER GENERATION
- LIFT/ REACH TRUCK

PART NO.	DESCRIPTION	PRICE
ZZ002197	HATZ 1B30 6.3HP DIESEL ENGINE WITH 12 VOLT START	£3,146.48

HATZ 1B40 9.2HP DIESEL ENGINE WITH 12 VOLT START

- HATZ 1B40 9.2 HP (6.8 KW) SINGLE CYLINDER DIESEL ENGINE WITH 12 VOLT ELECTRIC START..
- SHAFT DRIVE 23MM TAPER OR 1" INCH STRAIGHT.
- COMES COMPLETE WITH FUEL TANK, AIR FILTER,SILENCER, RECOIL STARTER AND INSTRUMENT PANEL 12 VOLT.
- ALL ENGINES CAN BE FITTED WITH COMPLETE READY TO GO HYDRAULIC PUMPS AND VALVE SYSTEMS - ASK FOR DETAILS.

HATZ ARE MANUFACTURERS OF ENVIRONMENTALLY FRIENDLY DIESEL ENGINES FROM 1.5HP TO 80HP (1.1KW TO 6OKW).

HATZ ARE WORLD LEADERS IN QUIET, CLEAN, AIR-COOLED DIESEL ENGINES FOR THE FOLLOWING INDUSTRIES:

- CONSTRUCTION
- PUMPSET
- AGRICULTURE
- POWER GENERATION
- LIFT/ REACH TRUCK

PART NO.	DESCRIPTION	PRICE
ZZ002199	HATZ 1B40 9.2HP DIESEL ENGINE WITH 12 VOLT START	£3,673.09

HATZ 1B40 9.2HP DIESEL ENGINE WITH RECOIL START

- HATZ 1B40 9.2 HP (6.8 KW) SINGLE CYLINDER DIESEL ENGINE RECOIL START.
- SHAFT DRIVE 23MM TAPER OR 1" INCH STRAIGHT.
- COMES COMPLETE WITH FUEL TANK, AIR FILTER,SILENCER, RECOIL STARTER.
- ALL ENGINES CAN BE FITTED WITH COMPLETE READY TO GO HYDRAULIC PUMPS AND VALVE SYSTEMS - ASK FOR DETAILS.

HATZ ARE MANUFACTURERS OF ENVIRONMENTALLY FRIENDLY DIESEL ENGINES FROM 1.5HP TO 80HP (1.1KW TO 6OKW).

HATZ ARE WORLD LEADERS IN QUIET, CLEAN, AIR-COOLED DIESEL ENGINES FOR THE FOLLOWING INDUSTRIES:

- CONSTRUCTION
- PUMPSET
- AGRICULTURE
- POWER GENERATION
- LIFT/ REACH TRUCK

PART NO.	DESCRIPTION	PRICE
ZZ002198	HATZ 1B40 9.2HP DIESEL ENGINE WITH RECOIL START	£2,986.21

HATZ 1D50Z 10.2HP DIESEL ENGINE WITH 12 VOLT START

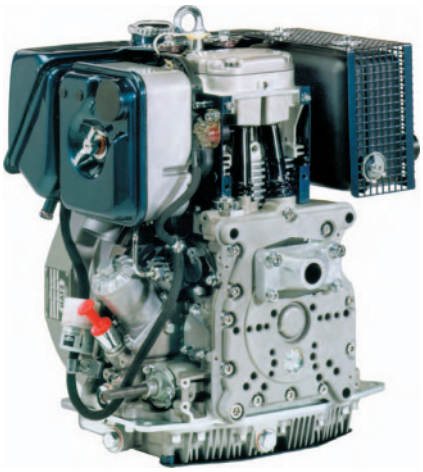

- HATZ 1D50Z 10.2 HP (7.5 KW) SINGLE CYLINDER DIESEL ENGINE WITH RECOIL START.
- FLY WHEEL DRIVE
- COMES COMPLETE WITH FUEL TANK, AIR FILTER,SILENCER AND RECOIL START.
- ALL ENGINES CAN BE FITTED WITH COMPLETE READY TO GO HYDRAULIC PUMPS AND VALVE SYSTEMS - ASK FOR DETAILS.

HATZ ARE MANUFACTURERS OF ENVIRONMENTALLY FRIENDLY DIESEL ENGINES FROM 1.5HP TO 80HP (1.1KW TO 6OKW).

HATZ ARE WORLD LEADERS IN QUIET, CLEAN, AIR-COOLED DIESEL ENGINES FOR THE FOLLOWING INDUSTRIES:

- CONSTRUCTION
- PUMPSET
- AGRICULTURE
- POWER GENERATION
- LIFT/ REACH TRUCK

PART NO.	DESCRIPTION	PRICE
ZZ002201	HATZ 1D50Z 10.2HP DIESEL ENGINE WITH 12 VOLT START	£4,797.86

HATZ 1D50Z 10.2HP DIESEL ENGINE WITH HANDLE START

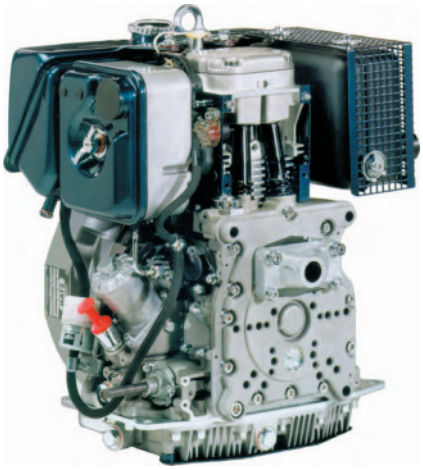

- HATZ 1D50Z 10.2 HP (7.5 KW) SINGLE CYLINDER DIESEL ENGINE WITH HANDLE START.
- FLY WHEEL DRIVE
- COMES COMPLETE WITH FUEL TANK, AIR FILTER,SILENCER AND CRANK HANDLE.
- ALL ENGINES CAN BE FITTED WITH COMPLETE READY TO GO HYDRAULIC PUMPS AND VALVE SYSTEMS - ASK FOR DETAILS.

HATZ ARE MANUFACTURERS OF ENVIRONMENTALLY FRIENDLY DIESEL ENGINES FROM 1.5HP TO 80HP (1.1KW TO 6OKW).

HATZ ARE WORLD LEADERS IN QUIET, CLEAN, AIR-COOLED DIESEL ENGINES FOR THE FOLLOWING INDUSTRIES:

- CONSTRUCTION
- PUMPSET
- AGRICULTURE
- POWER GENERATION
- LIFT/ REACH TRUCK

PART NO.	DESCRIPTION	PRICE
ZZ002200	HATZ 1D50Z 10.2HP DIESEL ENGINE WITH HANDLE START	£4,225.46

HATZ 1D81Z 13.7HP DIESEL ENGINE WITH 12 VOLT START

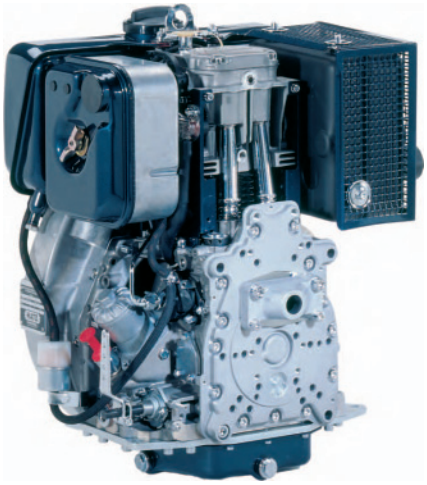

- HATZ 1D81Z 13.7 HP (10.1 KW) SINGLE CYLINDER DIESEL ENGINE WITH RECOIL START.
- FLY WHEEL DRIVE
- COMES COMPLETE WITH FUEL TANK, AIR FILTER,SILENCER AND RECOIL STARTER.
- ALL ENGINES CAN BE FITTED WITH COMPLETE READY TO GO HYDRAULIC PUMPS AND VALVE SYSTEMS - ASK FOR DETAILS.

HATZ ARE MANUFACTURERS OF ENVIRONMENTALLY FRIENDLY DIESEL ENGINES FROM 1.5HP TO 80HP (1.1KW TO 6OKW).

HATZ ARE WORLD LEADERS IN QUIET, CLEAN, AIR-COOLED DIESEL ENGINES FOR THE FOLLOWING INDUSTRIES:

- CONSTRUCTION
- PUMPSET
- AGRICULTURE
- POWER GENERATION
- LIFT/ REACH TRUCK

PART NO.	DESCRIPTION	PRICE
ZZ002203	HATZ 1D81Z 13.7HP DIESEL ENGINE WITH 12 VOLT START	£5,281.53

HATZ 1D81Z 13.7HP DIESEL ENGINE WITH HANDLE START

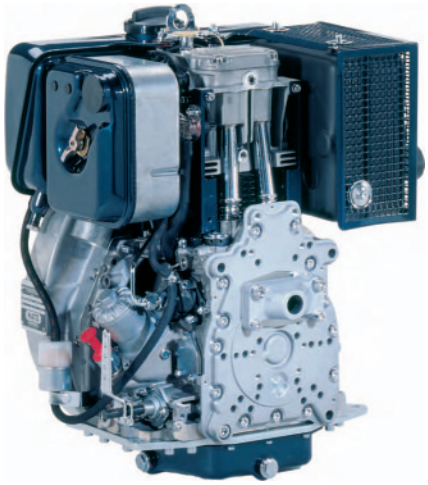

- HATZ 1D81Z 13.7 HP (10.1 KW) SINGLE CYLINDER DIESEL ENGINE WITH HANDLE START.
- FLY WHEEL DRIVE
- COMES COMPLETE WITH FUEL TANK, AIR FILTER,SILENCER AND CRANK HANDLE.
- ALL ENGINES CAN BE FITTED WITH COMPLETE READY TO GO HYDRAULIC PUMPS AND VALVE SYSTEMS - ASK FOR DETAILS.

HATZ ARE MANUFACTURERS OF ENVIRONMENTALLY FRIENDLY DIESEL ENGINES FROM 1.5HP TO 80HP (1.1KW TO 6OKW).

HATZ ARE WORLD LEADERS IN QUIET, CLEAN, AIR-COOLED DIESEL ENGINES FOR THE FOLLOWING INDUSTRIES:

- CONSTRUCTION
- PUMPSET
- AGRICULTURE
- POWER GENERATION
- LIFT/ REACH TRUCK

PART NO.	DESCRIPTION	PRICE
ZZ002202	HATZ 1D81Z 13.7HP DIESEL ENGINE WITH HANDLE START	£4,752.06

HATZ 2G40 20HP DIESEL ENGINE WITH 12 VOLT START

- HATZ 2G40 20 HP (14.7 KW) MULTI CYLINDER DIESEL ENGINE WITH RECOIL START.
- 38MM TAPER DRIVE
- COMES COMPLETE WITH FUEL FEED PUMP, AIR FILTER, EXHAUST SILENCER, AND INSTRUMENT BOX 12 VOLT.
- ALL ENGINES CAN BE FITTED WITH COMPLETE READY TO GO HYDRAULIC PUMPS AND VALVE SYSTEMS - ASK FOR DETAILS.

HATZ ARE MANUFACTURERS OF ENVIRONMENTALLY FRIENDLY DIESEL ENGINES FROM 1.5HP TO 80HP (1.1KW TO 6OKW).

HATZ ARE WORLD LEADERS IN QUIET, CLEAN, AIR-COOLED DIESEL ENGINES FOR THE FOLLOWING INDUSTRIES:

- CONSTRUCTION
- PUMPSET
- AGRICULTURE
- POWER GENERATION
- LIFT/ REACH TRUCK

PART NO.	DESCRIPTION	PRICE
ZZ002204	HATZ 2G40 20HP DIESEL ENGINE WITH 12 VOLT START	£6,417.75

HATZ 2L41C 33.2 HP DIESEL ENGINE WITH 12 VOLT START

- HATZ 2L41C 33.2 HP (24.4 KW) MULTI CYLINDER DIESEL ENGINE WITH RECOIL START.
- FLY WHEEL DRIVE
- COMES COMPLETE WITH FUEL FEED PUMP, AIR FILTER, EXHAUST SILENCER, AND INSTRUMENT BOX 12 VOLT.
- ALL ENGINES CAN BE FITTED WITH COMPLETE READY TO GO HYDRAULIC PUMPS AND VALVE SYSTEMS - ASK FOR DETAILS.

HATZ ARE MANUFACTURERS OF ENVIRONMENTALLY FRIENDLY DIESEL ENGINES FROM 1.5HP TO 80HP (1.1KW TO 6OKW).

HATZ ARE WORLD LEADERS IN QUIET, CLEAN, AIR-COOLED DIESEL ENGINES FOR THE FOLLOWING INDUSTRIES:

- CONSTRUCTION
- PUMPSET
- AGRICULTURE
- POWER GENERATION
- LIFT/ REACH TRUCK

PART NO.	DESCRIPTION	PRICE
ZZ002205	HATZ 2L41C 33.2 HP DIESEL ENGINE WITH 12 VOLT START	£11,844.10

HATZ 3L41C 49.9 HP DIESEL ENGINE WITH 12 VOLT START

- HATZ 3L41C 49.9 HP (36.7 KW) MULTI CYLINDER DIESEL ENGINE.
- FLY WHEEL DRIVE, RECOIL START
- COMES COMPLETE WITH FUEL FEED PUMP, AIR FILTER, EXHAUST SILENCER, AND INSTRUMENT BOX 12 VOLT.
- ALL ENGINES CAN BE FITTED WITH COMPLETE READY TO GO HYDRAULIC PUMPS AND VALVE SYSTEMS - ASK FOR DETAILS.

HATZ ARE MANUFACTURERS OF ENVIRONMENTALLY FRIENDLY DIESEL ENGINES FROM 1.5HP TO 80HP (1.1KW TO 6OKW).

HATZ ARE WORLD LEADERS IN QUIET, CLEAN, AIR-COOLED DIESEL ENGINES FOR THE FOLLOWING INDUSTRIES:

- CONSTRUCTION
- PUMPSET
- AGRICULTURE
- POWER GENERATION
- LIFT/ REACH TRUCK

PART NO.	DESCRIPTION	PRICE
ZZ002206	HATZ 3L41C 49.9 HP DIESEL ENGINE WITH 12 VOLT START	£13,933.36

HATZ 4L41C 66.4 HP DIESEL ENGINE WITH 12 VOLT START

- HATZ 4L41C 66.4 HP (48.8 KW) MULTI CYLINDER DIESEL ENGINE.
- FLY WHEEL DRIVE
- COMES COMPLETE WITH FUEL FEED PUMP, AIR FILTER, EXHAUST SILENCER, AND INSTRUMENT BOX 12 VOLT.
- ALL ENGINES CAN BE FITTED WITH COMPLETE READY TO GO HYDRAULIC PUMPS AND VALVE SYSTEMS - ASK FOR DETAILS.

HATZ ARE MANUFACTURERS OF ENVIRONMENTALLY FRIENDLY DIESEL ENGINES FROM 1.5HP TO 80HP (1.1KW TO 6OKW).

HATZ ARE WORLD LEADERS IN QUIET, CLEAN, AIR-COOLED DIESEL ENGINES FOR THE FOLLOWING INDUSTRIES:

- CONSTRUCTION
- PUMPSET
- AGRICULTURE
- POWER GENERATION
- LIFT/ REACH TRUCK

PART NO.	DESCRIPTION	PRICE
ZZ002207	HATZ 4L41C 66.4 HP DIESEL ENGINE WITH 12 VOLT START	£16,912.50

FULL ENGINE DETAILS AND SPECIFICATIONS CAN BE DOWNLOADED FORM OUR WEBSITE AT WWW.FLOWFITONLINE.COM

PETROL ENGINE DRIVEN HYDRAULIC GEAR PUMP SETS

HONDA 5.3 HP PETROL ENGINE DRIVEN HYDRAULIC GEAR PUMP 64
HONDA 9 HP PETROL ENGINE DRIVEN HYDRAULIC GEAR PUMP 64
HONDA 13 HP PETROL ENGINE DRIVEN HYDRAULIC GEAR PUMP 64
HONDA 20 HP PETROL ENGINE DRIVEN HYDRAULIC GEAR PUMP 64
LONCIN 5.5 HP PETROL ENGINE DRIVEN HYDRAULIC GEAR PUMP.....65
LONCIN 9 HP PETROL ENGINE DRIVEN HYDRAULIC GEAR PUMP.....65
LONCIN 13 HP PETROL ENGINE DRIVEN HYDRAULIC GEAR PUMP.....65
LONCIN 20 HP PETROL ENGINE DRIVEN HYDRAULIC GEAR PUMP.....65

PETROL PUMP SETS ARE PERFECT FOR INSTALLATIONS WHERE NO ELECTRICAL POWER IS AVAILABLE OR IN CONDITIONS SUITABLE SOLELY FOR PETROL.

EXAMPLES OF IDEAL USAGE SITUATIONS ARE: BOATYARDS, OFFSHORE APPLICATIONS, BOAT APPLICATIONS, MOBILE APPLICATIONS, AGRICULTURE APPLICATIONS, INDUSTRIAL APPLICATIONS, EMERGENCY POWER SITUATIONS, AND ANY TRUCK MOUNTED FOR MOBILITY PLUS CRANES AND LOG SLITTERS.

OUR COMPLETE RANGE OF PETROL DRIVEN POWER PACKS ARE BASED ON OUR RANGE OF LONCIN PETROL ENGINES FROM 2.6KW - 15.3KW, WITH PRESSURES UP TO 210 BAR AND FLOWS UP TO 63 L/MIN AVAILABLE ON REQUEST.

ALL PETROL PUMP SETS ARE FULLY ASSEMBLED AND ISSUED WITH 12 MONTHS WARRANTY FROM INVOICE DATE.

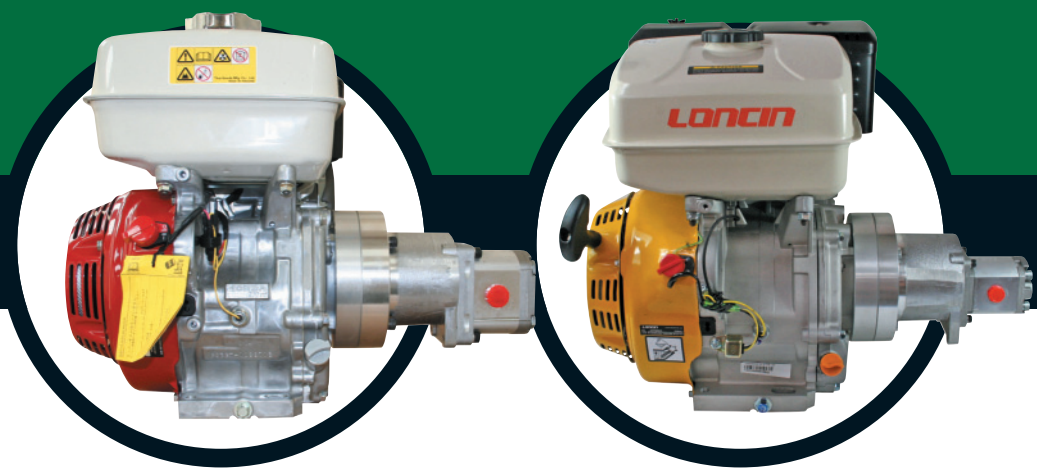

POWERED by HONDA™

FLOWFIT

LONCIN

HONDA 5.3 HP PETROL ENGINE DRIVEN HYDRAULIC GEAR PUMP

HONDA GX160 5.3 HP SINGLE CYLINDER 4-STROKE AIR COOLING PETROL ENGINE,
FLOWFIT BELL HOUSING AND DRIVE COUPLING, 3.2CC GEAR PUMP GIVING 10.5L/MIN@ 3045PSI.
PLEASE NOTE AT SLOWER RPM PRESSURE CAN BE INCREASED AND FLOW CAN BE DECREASED WITH SLOWER ENGINE SETTING.

PART NO.	FLOW L/MIN	PRESSURE PSI	PUMP CC	ENGINE HP	ENGINE MODEL	LIST PRICE
ZZ0002401	10.5	3045	3.2	5.3	GX160	£892.94

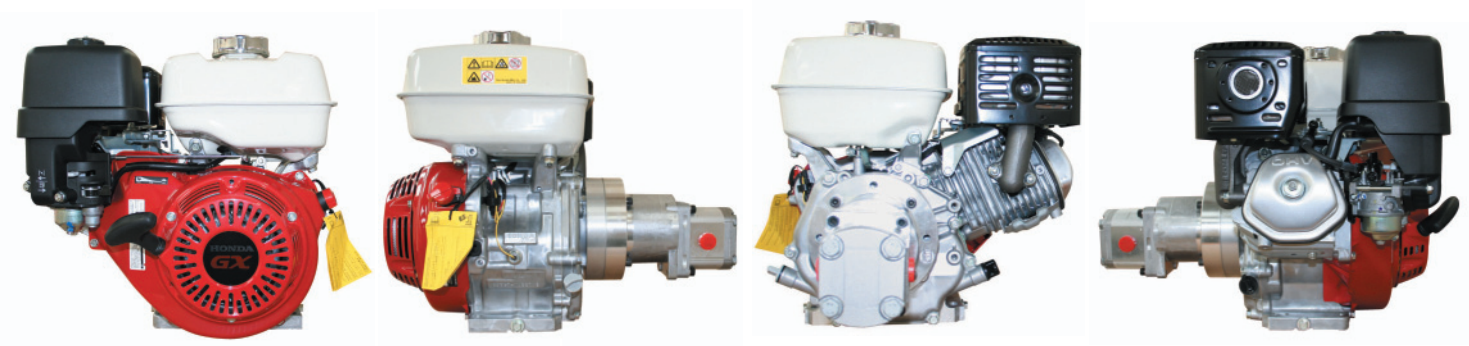

HONDA 9 HP PETROL ENGINE DRIVEN HYDRAULIC GEAR PUMP

HONDA GX270 9.0 HP SINGLE CYLINDER 4-STROKE AIR COOLING PETROL ENGINE,
FLOWFIT BELL HOUSING AND DRIVE COUPLING, 6.3CC GEAR PUMP GIVING 19.5L/MIN@ 3045PSI.
PLEASE NOTE AT SLOWER RPM PRESSURE CAN BE INCREASED AND FLOW CAN BE DECREASED WITH SLOWER ENGINE SETTING.

PART NO.	FLOW L/MIN	PRESSURE PSI	PUMP CC	ENGINE HP	ENGINE MODEL	LIST PRICE
ZZ0002402	19.5	3045	6.3	9	GX270	£1,511.14

HONDA 13 HP PETROL ENGINE DRIVEN HYDRAULIC GEAR PUMP

HONDA GX390 13 HP SINGLE CYLINDER 4-STROKE AIR COOLING PETROL ENGINE,
FLOWFIT BELL HOUSING AND DRIVE COUPLING, 8CC GEAR PUMP GIVING 24L/MIN@ 3045PSI.
PLEASE NOTE AT SLOWER RPM PRESSURE CAN BE INCREASED AND FLOW CAN BE DECREASED WITH SLOWER ENGINE SETTING.

PART NO.	FLOW L/MIN	PRESSURE PSI	PUMP CC	ENGINE HP	ENGINE MODEL	LIST PRICE
ZZ002404	24	3045	8	13	GX390	£1,751.54

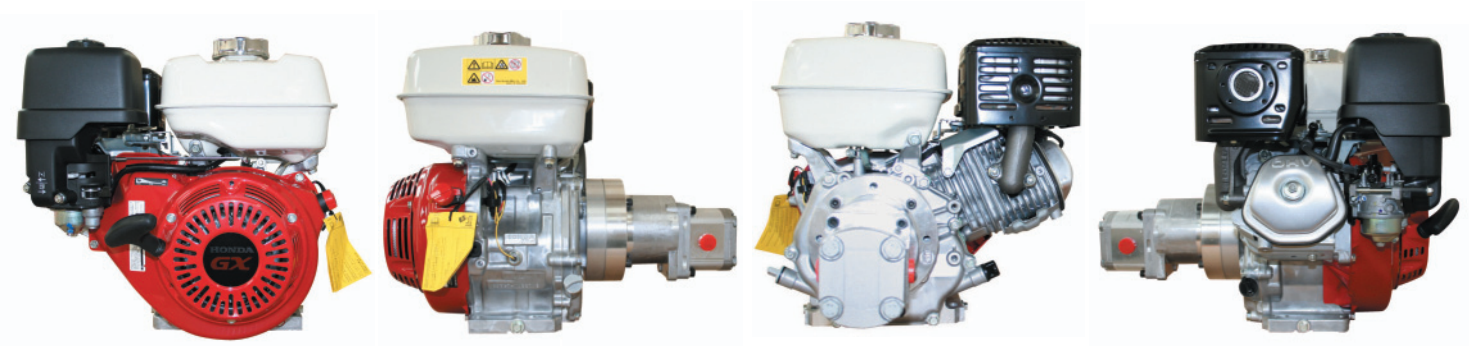

HONDA 20 HP PETROL ENGINE DRIVEN HYDRAULIC GEAR PUMP

HONDA GX630-F-M 20 HP TWIN CYLINDER AIR COOLED PETROL ENGINE,
FLOWFIT BELL HOUSING AND DRIVE COUPLING, GEAR PUMP GIVING 33L/MIN@ 3000PSI. PUMP 11CC/REV.
PLEASE NOTE AT SLOWER RPM PRESSURE CAN BE INCREASED AND FLOW CAN BE DECREASED WITH SLOWER ENGINE SETTING.
- COMES WITH RECOIL AND ELECTRIC START
- COMES WITH FUEL TANK AND MUFFLER FITTED

PART NO.	FLOW L/MIN	PRESSURE PSI	PUMP	ENGINE HP	ENGINE MODEL	LIST PRICE
ZZ004679	33	3000	GEAR PUMP	20	GX630-F-M	£3,596.22

ELECTRIC START ON ANY ENGINE	LIST PRICE
FOR ELECTRIC START	ADD + £149.74

50% OFF ALL PRICES

LONCIN 5.5 HP PETROL ENGINE DRIVEN HYDRAULIC GEAR PUMP

LONCIN G160 5.5 HP SINGLE CYLINDER 4-STROKE AIR COOLING PETROL ENGINE,
FLOWFIT BELL HOUSING AND DRIVE COUPLING, 3.2CC GEAR PUMP GIVING 10.5L/MIN@ 3045PSI.
PLEASE NOTE AT SLOWER RPM PRESSURE CAN BE INCREASED AND FLOW CAN BE DECREASED WITH SLOWER ENGINE SETTING.

PART NO.	FLOW L/MIN	PRESSURE PSI	PUMP CC	ENGINE HP	ENGINE MODEL	LIST PRICE
ZZ000139	10.5	3045	3.2	5.5	G160	£609.26

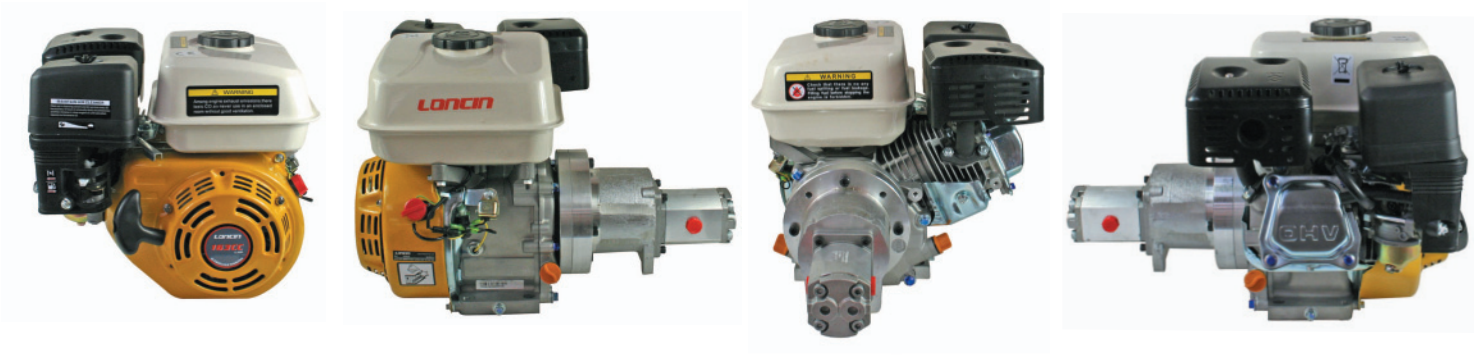

LONCIN 9 HP PETROL ENGINE DRIVEN HYDRAULIC GEAR PUMP

LONCIN G270 9.0 HP SINGLE CYLINDER 4-STROKE AIR COOLING PETROL ENGINE,
FLOWFIT BELL HOUSING AND DRIVE COUPLING, 6.3CC GEAR PUMP GIVING 19.5L/MIN@ 3045PSI.
PLEASE NOTE AT SLOWER RPM PRESSURE CAN BE INCREASED AND FLOW CAN BE DECREASED WITH SLOWER ENGINE SETTING.

PART NO.	FLOW L/MIN	PRESSURE PSI	PUMP CC	ENGINE HP	ENGINE MODEL	LIST PRICE
ZZ000142	19.5	3045	6.3	9	G270	£1,041.62

LONCIN 13 HP PETROL ENGINE DRIVEN HYDRAULIC GEAR PUMP

LONCIN G390 13 HP SINGLE CYLINDER 4-STROKE AIR COOLING PETROL ENGINE,
FLOWFIT BELL HOUSING AND DRIVE COUPLING, 8CC GEAR PUMP GIVING 24L/MIN@ 3045PSI.
PLEASE NOTE AT SLOWER RPM PRESSURE CAN BE INCREASED AND FLOW CAN BE DECREASED WITH SLOWER ENGINE SETTING.

PART NO.	FLOW L/MIN	PRESSURE PSI	PUMP CC	ENGINE HP	ENGINE MODEL	LIST PRICE
ZZ000144	24	3045	8	13	G390	£1,086.17

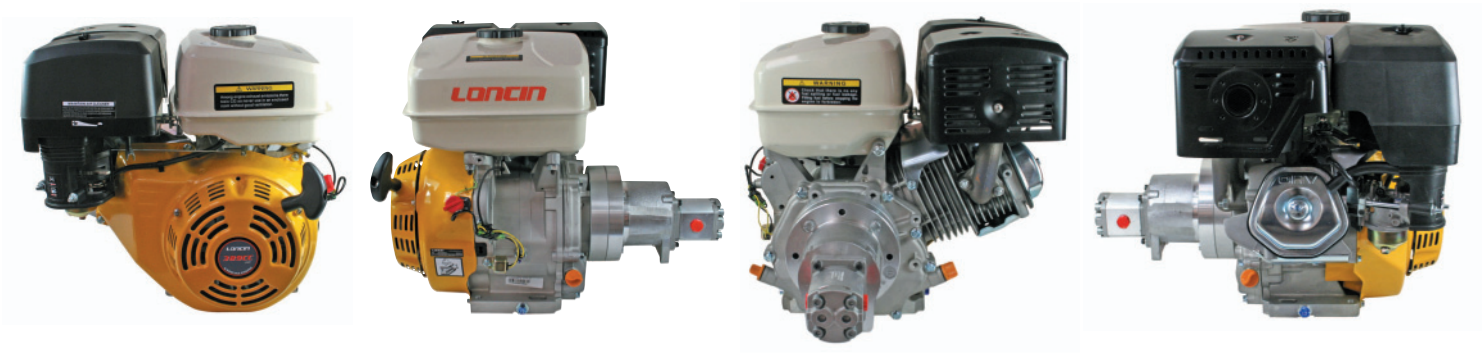

ELECTRIC START ON ANY ENGINE	LIST PRICE
FOR ELECTRIC START	ADD + £149.74

PETROL ENGINE DRIVEN HYDRAULIC HI-LOW GEAR PUMP SETS

HONDA 5.5 HP PETROL ENGINE DRIVEN HYDRAULIC GEAR PUMP HI-LOW.....67
LONCIN 5.5 HP PETROL ENGINE DRIVEN HYDRAULIC GEAR PUMP HI-LOW.....67
HONDA 9 HP PETROL ENGINE DRIVEN HYDRAULIC GEAR PUMP HI-LOW.....68
LONCIN 9 HP PETROL ENGINE DRIVEN HYDRAULIC GEAR PUMP HI-LOW.....68
HONDA 13 HP PETROL ENGINE DRIVEN HYDRAULIC GEAR PUMP HI-LOW.....69
LONCIN 13 HP PETROL ENGINE DRIVEN HYDRAULIC GEAR PUMP HI-LOW.....69
HONDA 20 HP PETROL ENGINE DRIVEN HYDRAULIC GEAR PUMP HI-LOW.....69

PETROL PUMP SETS ARE PERFECT FOR INSTALLATIONS WHERE NO ELECTRICAL POWER IS AVAILABLE OR IN CONDITIONS SUITABLE SOLELY FOR PETROL.

EXAMPLES OF IDEAL USAGE SITUATIONS ARE: BOATYARDS, OFFSHORE APPLICATIONS, BOAT APPLICATIONS, MOBILE APPLICATIONS, AGRICULTURE APPLICATIONS, INDUSTRIAL APPLICATIONS, EMERGENCY POWER SITUATIONS, AND ANY TRUCK MOUNTED FOR MOBILITY PLUS CRANES AND LOG SLITTERS.

OUR COMPLETE RANGE OF PETROL DRIVEN POWER PACKS ARE BASED ON OUR RANGE OF LONCIN PETROL ENGINES FROM 5.5HP - 13HP, WITH PRESSURES UP TO 210 BAR AND FLOWS UP TO 61 L/MIN AVAILABLE ON REQUEST.

ALL PETROL PUMP SETS ARE FULLY ASSEMBLED AND ISSUED WITH 12 MONTHS WARRANTY FROM INVOICE DATE.

POWERED by HONDA™

FLOWFIT

LONCIN

HONDA 5.5 HP PETROL ENGINE DRIVEN HYDRAULIC GEAR PUMP HI-LOW

POWERED by HONDA

HONDA GX160UT1QX4 5.5 HP SINGLE CYLINDER 4-STROKE AIR COOLING PETROL ENGINE,
FLOWFIT BELL HOUSING AND DRIVE COUPLING, HI-LOW GEAR PUMP GIVING 36L/MIN@ 3000PSI.
1ST PUMP 6.3CC/REV • 2ND PUMP 2.1CC/REV
PLEASE NOTE AT SLOWER RPM PRESSURE CAN BE INCREASED AND FLOW CAN BE DECREASED WITH SLOWER ENGINE SETTING.

PART NO.	FLOW L/MIN	PRESSURE PSI	PUMP	ENGINE HP	LONCIN ENGINE MODEL	LIST PRICE
ZZ002406	36	3000	2 STAGE	5.5	GX160UT1QX4	£961.63

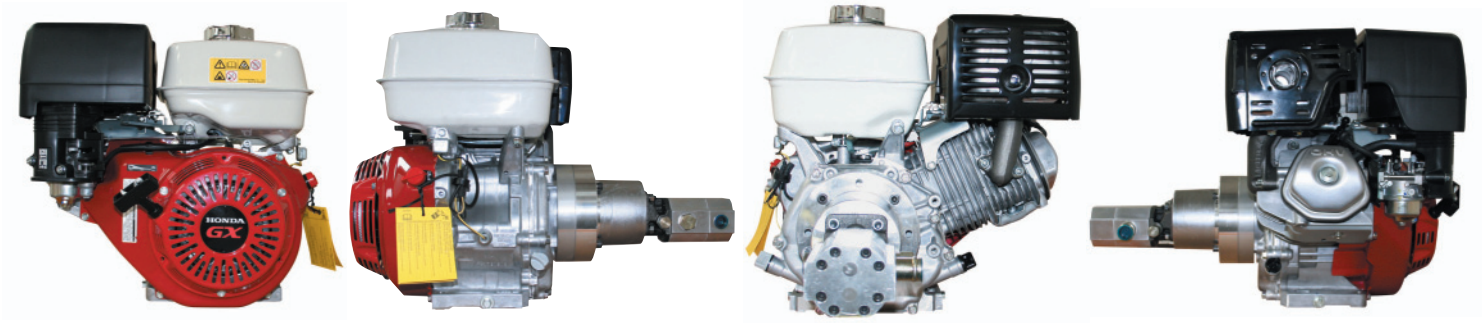

LONCIN 5.5 HP PETROL ENGINE DRIVEN HYDRAULIC GEAR PUMP HI-LOW

LONCIN G160FQ 5.5 HP SINGLE CYLINDER 4-STROKE AIR COOLING PETROL ENGINE,
FLOWFIT BELL HOUSING AND DRIVE COUPLING, HI-LOW GEAR PUMP GIVING 36L/MIN@ 3000PSI.
1ST PUMP 6.3CC/REV • 2ND PUMP 2.1CC/REV
PLEASE NOTE AT SLOWER RPM PRESSURE CAN BE INCREASED AND FLOW CAN BE DECREASED WITH SLOWER ENGINE SETTING.

PART NO.	FLOW L/MIN	PRESSURE PSI	PUMP	ENGINE HP	HONDA ENGINE MODEL	LIST PRICE
ZZ001356	36	3000	2 STAGE	5.5	G160FQ	£681.32

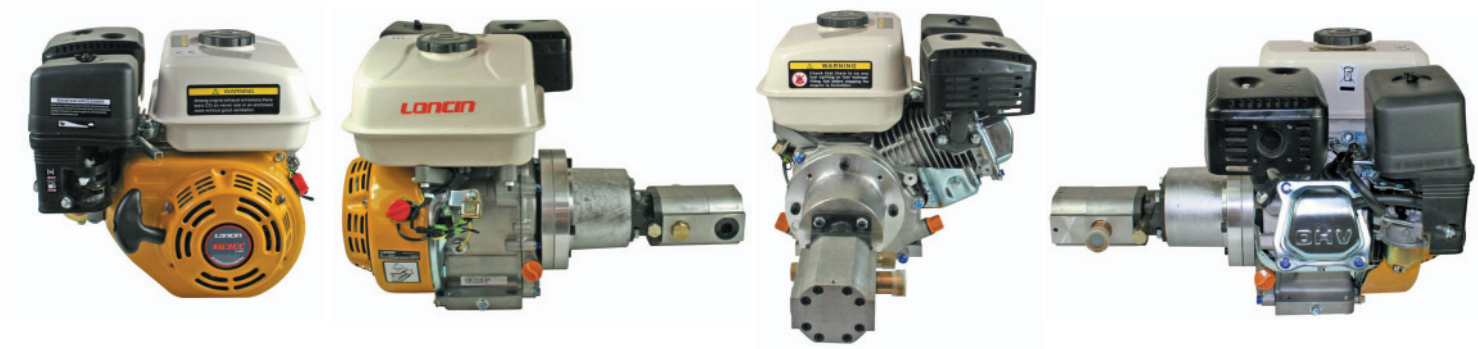

FLOWFIT PETROL ENGINE DRIVEN HI-LO PUMP CAPABLE OF PRODUCING 36 L/MIN OF FLOW AND 3000 PSI OF PRESSURE

These 2 stage petrol pump sets can give you much faster cycle times and higher possible pressures with a small engine.Excellent for use on log splitter applications and are 85% efficient.

The HI-LO gear pump changes internally on the high flow pump preset at 400-900 psi low pressure to low flow pump at 3000 psi for the high pressure pump. Applications for the HI-LO pump are log splitters and presses where rapid movement of the cylinder at low pressure is required prior to automatically switching to the high pressure mode to meet load requirements.

THE BASIC LONCIN PETROL ENGINE DRIVEN HI-LO PUMPSET CONSISTS OF:

- LONCIN 5.5 HP SINGLE CYLINDER 4-STROKE AIR COOLING PETROL ENGINE.
- FLOWFIT 8 GPM HI-LO GEAR PUMP GIVING 36 L/MIN @ 3000 PSI AT 3600 RPM.
- FLOWFIT BELL HOUSING AND DRIVE COUPLING
- PLEASE ALSO NOTE FLOW CAN BE DECREASED WITH SLOWER ENGINE SETTING PLEASE NOTE HORSEPOWER AVAILABLE WILL DROP OFF.

ALL PETROL PUMP SETS ARE FULLY ASSEMBLED AND ISSUED WITH 12 MONTHS WARRANTY FROM INVOICE DATE.

THESE PETROL PUMP SETS ARE PERFECT FOR INSTALLATIONS WHERE NO ELECTRICAL POWER IS AVAILABLE OR CONDITIONS ARE NOT SUITABLE TO USE ELECTRICITY.

EXAMPLE OF IDEAL USAGE SITUATIONS ARE:

- LOG SPLITTER APPLICATIONS
- BOATYARDS.
- OFFSHORE APPLICATIONS
- BOAT APPLICATIONS
- MOBILE APPLICATIONS
- AGRICULTURAL APPLICATIONS
- INDUSTRIAL APPLICATIONS
- EMERGENCY POWER SITUATIONS
- TRUCK MOUNTED CRANES

OUR COMPLETE RANGE OF PETROL DRIVEN POWER PACKS ARE BASED ON A RANGE OF LONCIN PETROL ENGINES FROM 2.6KW - 15.3KW, WITH PRESSURES UP TO 210 BAR AND FLOWS UP TO 72.6 L/MIN AVAILABLE ON REQUEST.

FOR CUSTOMER SUPPORT ON THIS ITEM PLEASE CALL 01584876033

PLEASE NOTE THAT DELIVERY TIME WILL DEPEND ON THE STYLE OF PACK YOU REQUIRE.

We can ship worldwide and will quote delivery costs on request.

TOTAL FLOW L/MIN @900 PSI AND 3600 RPM	TOTAL FLOW L/MIN @3000 PSI AND 3600 RPM
36 L/MIN	12.96 L/MIN

HONDA 9 HP PETROL ENGINE DRIVEN HYDRAULIC GEAR PUMP HI-LOW

POWERED by HONDA

HONDA GX270UT2QXQ4 9.0 HP SINGLE CYLINDER 4-STROKE AIR COOLING PETROL ENGINE,
FLOWFIT BELL HOUSING AND DRIVE COUPLING, HI-LOW GEAR PUMP GIVING 44.6L/MIN@ 3000PSI.
1ST PUMP 8.8CC/REV • 2ND PUMP 3.6CC/REV
PLEASE NOTE AT SLOWER RPM PRESSURE CAN BE INCREASED AND FLOW CAN BE DECREASED WITH SLOWER ENGINE SETTING.

PART NO.	FLOW L/MIN	PRESSURE PSI	PUMP	ENGINE HP	HONDA ENGINE MODEL	LIST PRICE
ZZ002408	44.6	3000	2 STAGE	9	GX270UT2QXQ4	£1,488.24

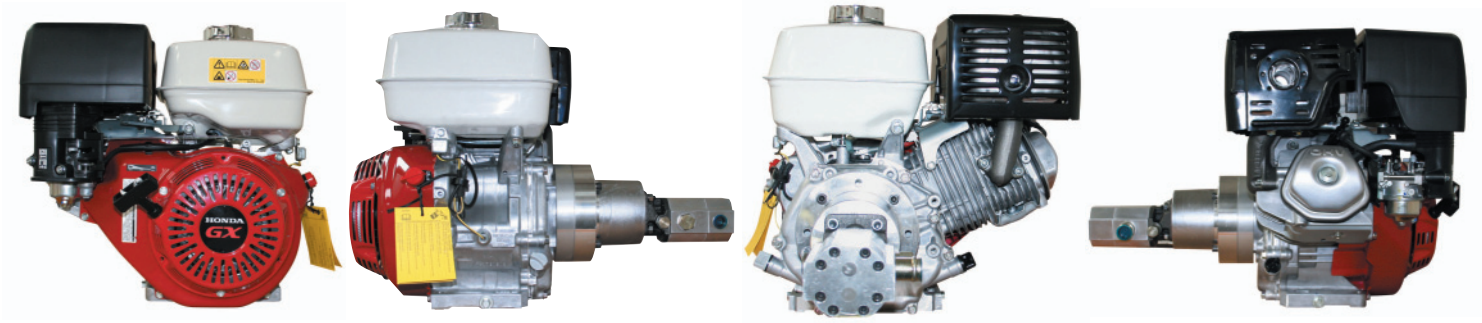

LONCIN 9 HP PETROL ENGINE DRIVEN HYDRAULIC GEAR PUMP HI-LOW

LONCIN G270 9.0 HP SINGLE CYLINDER 4-STROKE AIR COOLING PETROL ENGINE,
FLOWFIT BELL HOUSING AND DRIVE COUPLING, HI-LOW GEAR PUMP GIVING 44.6L/MIN@ 3000PSI.
1ST PUMP 8.8CC/REV • 2ND PUMP 3.6CC/REV
PLEASE NOTE AT SLOWER RPM PRESSURE CAN BE INCREASED AND FLOW CAN BE DECREASED WITH SLOWER ENGINE SETTING.

PART NO.	FLOW L/MIN	PRESSURE PSI	PUMP	ENGINE HP	LONCIN ENGINE MODEL	LIST PRICE
ZZ001360	44.6	3000	2 STAGE	9	G270FQ	£976.48

FLOWFIT PETROL ENGINE DRIVEN HI-LO PUMP CAPABLE OF PRODUCING 49.9 L/MIN OF FLOW AND 3000 PSI OF PRESSURE

These 2 stage petrol pump sets can give you much faster cycle times and higher possible pressures with a small engine.Excellent for use on log splitter applications and are 85% efficient.

The HI-LO gear pump changes internally on the high flow pump preset at 400-900 psi low pressure to low flow pump at 3000 psi for the high pressure pump. Applications for the HI-LO pump are log splitters and presses where rapid movement of the cylinder at low pressure is required prior to automatically switching to the high pressure mode to meet load requirements.

THE BASIC LONCIN PETROL ENGINE DRIVEN HI-LO PUMPSET CONSISTS OF:

- LONCIN 9 HP SINGLE CYLINDER 4-STROKE AIR COOLING PETROL ENGINE.
- FLOWFIT 11 GPM HI-LO GEAR PUMP GIVING 49.9 L/MIN @ 3000 PSI AT 3600 RPM.
- FLOWFIT BELL HOUSING AND DRIVE COUPLING
- PLEASE ALSO NOTE FLOW CAN BE DECREASED WITH SLOWER ENGINE SETTING PLEASE NOTE HORSEPOWER AVAILABLE WILL DROP OFF.

ALL PETROL PUMP SETS ARE FULLY ASSEMBLED AND ISSUED WITH 12 MONTHS WARRANTY FROM INVOICE DATE.

THESE PETROL PUMP SETS ARE PERFECT FOR INSTALLATIONS WHERE NO ELECTRICAL POWER IS AVAILABLE OR CONDITIONS ARE NOT SUITABLE TO USE ELECTRICITY.

EXAMPLE OF IDEAL USAGE SITUATIONS ARE:

- LOG SPLITTER APPLICATIONS
- BOATYARDS.
- OFFSHORE APPLICATIONS
- BOAT APPLICATIONS
- MOBILE APPLICATIONS
- AGRICULTURAL APPLICATIONS
- INDUSTRIAL APPLICATIONS
- EMERGENCY POWER SITUATIONS
- TRUCK MOUNTED CRANES

OUR COMPLETE RANGE OF PETROL DRIVEN POWER PACKS ARE BASED ON A RANGE OF LONCIN PETROL ENGINES FROM 2.6KW - 15.3KW, WITH PRESSURES UP TO 210 BAR AND FLOWS UP TO 72.6 L/MIN AVAILABLE ON REQUEST.

FOR CUSTOMER SUPPORT ON THIS ITEM PLEASE CALL 01584876033

PLEASE NOTE THAT DELIVERY TIME WILL DEPEND ON THE STYLE OF PACK YOU REQUIRE.

We can ship worldwide and will quote delivery costs on request.

TOTAL FLOW L/MIN @900 PSI AND 3600 RPM	TOTAL FLOW L/MIN @3000 PSI AND 3600 RPM
44.6 L/MIN	12.96 L/MIN

50% OFF ALL PRICES

HONDA 13 HP PETROL ENGINE DRIVEN HYDRAULIC GEAR PUMP HI-LOW

HONDA GX390UT2QXQ4 13 HP SINGLE CYLINDER 4-STROKE AIR COOLING PETROL ENGINE,
FLOWFIT BELL HOUSING AND DRIVE COUPLING, HI-LOW GEAR PUMP GIVING 61.5L/MIN@ 3000PSI.
1ST PUMP 12.9CC/REV • 2ND PUMP 4.1CC/REV
PLEASE NOTE AT SLOWER RPM PRESSURE CAN BE INCREASED AND FLOW CAN BE DECREASED WITH SLOWER ENGINE SETTING.

PART NO.	FLOW L/MIN	PRESSURE PSI	PUMP	ENGINE HP	HONDA ENGINE MODEL	LIST PRICE
ZZ002410	61.5	3000	2 STAGE	13	GX390UT2QXQ4	£1,733.23

LONCIN 13 HP PETROL ENGINE DRIVEN HYDRAULIC GEAR PUMP HI-LOW

LONCIN G390 13 HP SINGLE CYLINDER 4-STROKE AIR COOLING PETROL ENGINE,
FLOWFIT BELL HOUSING AND DRIVE COUPLING, HI-LOW GEAR PUMP GIVING 61.5L/MIN@ 3000PSI.
1ST PUMP 12.9CC/REV • 2ND PUMP 4.1CC/REV
PLEASE NOTE AT SLOWER RPM PRESSURE CAN BE INCREASED AND FLOW CAN BE DECREASED WITH SLOWER ENGINE SETTING.

PART NO.	FLOW L/MIN	PRESSURE PSI	PUMP	ENGINE HP	LONCIN ENGINE MODEL	LIST PRICE
ZZ001355	61.5	3000	2 STAGE	13	G390FQ	£1,010.17

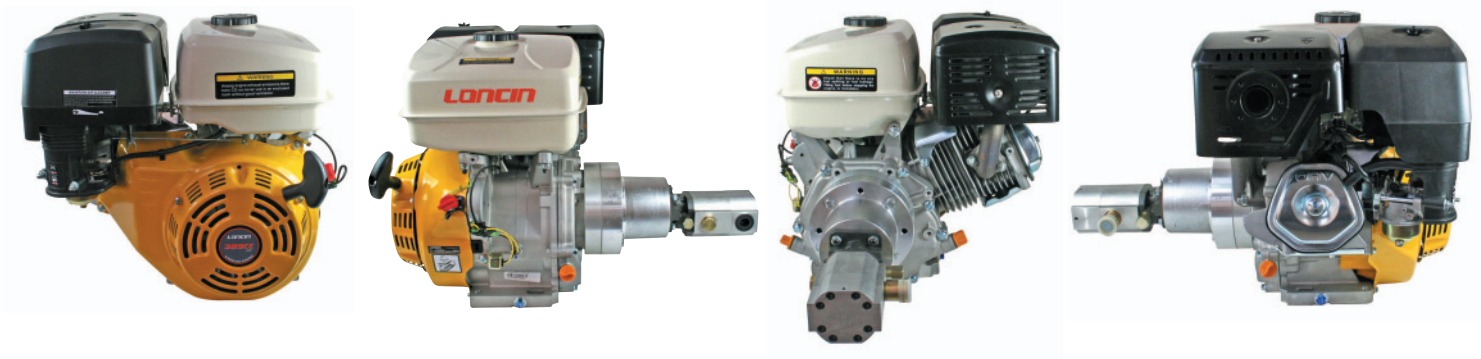

FLOWFIT PETROL ENGINE DRIVEN HI-LO PUMP CAPABLE OF PRODUCING 72.6 L/MIN OF FLOW AND 3000 PSI OF PRESSURE

These 2 stage petrol pump sets can give you much faster cycle times and higher possible pressures with a small engine.Excellent for use on log splitter applications and are 85% efficient.

The HI-LO gear pump changes internally on the high flow pump preset at 400-900 psi low pressure to low flow pump at 3000 psi for the high pressure pump. Applications for the HI-LO pump are log splitters and presses where rapid movement of the cylinder at low pressure is required prior to automatically switching to the high pressure mode to meet load requirements.

THE BASIC FLOWFIT PETROL ENGINE DRIVEN HI-LO PUMPSET CONSISTS OF:

- LONCIN 13HP SINGLE CYLINDER 4-STROKE AIR COOLING PETROL ENGINE.
- FLOWFIT 16 GPM HI-LO GEAR PUMP GIVING 72.6 L/MIN @ 3000 PSI AT 3600 RPM.
- FLOWFIT BELL HOUSING AND DRIVE COUPLING
- PLEASE ALSO NOTE FLOW CAN BE DECREASED WITH SLOWER ENGINE SETTING PLEASE NOTE HORSEPOWER AVAILABLE WILL DROP OFF.

ALL PETROL PUMP SETS ARE FULLY ASSEMBLED AND ISSUED WITH 12 MONTHS WARRANTY FROM INVOICE DATE.

THESE PETROL PUMP SETS ARE PERFECT FOR INSTALLATIONS WHERE NO ELECTRICAL POWER IS AVAILABLE OR CONDITIONS ARE NOT SUITABLE TO USE ELECTRICITY.

EXAMPLE OF IDEAL USAGE SITUATIONS ARE:

- LOG SPLITTER APPLICATIONS
- BOATYARDS.
- OFFSHORE APPLICATIONS
- BOAT APPLICATIONS
- MOBILE APPLICATIONS
- AGRICULTURAL APPLICATIONS
- INDUSTRIAL APPLICATIONS
- EMERGENCY POWER SITUATIONS
- TRUCK MOUNTED CRANES

OUR COMPLETE RANGE OF PETROL DRIVEN POWER PACKS ARE BASED ON A RANGE OF LONCIN PETROL ENGINES FROM 2.6KW - 15.3KW, WITH PRESSURES UP TO 210 BAR AND FLOWS UP TO 72.6 L/MIN AVAILABLE ON REQUEST.

FOR CUSTOMER SUPPORT ON THIS ITEM PLEASE CALL 01584876033

PLEASE NOTE THAT DELIVERY TIME WILL DEPEND ON THE STYLE OF PACK YOU REQUIRE.

We can ship worldwide and will quote delivery costs on request.

TOTAL FLOW L/MIN @900 PSI AND 3600 RPM	TOTAL FLOW L/MIN @3000 PSI AND 3600 RPM
61.5 L/MIN	15.08 L/MIN

HONDA 20 HP PETROL ENGINE DRIVEN HYDRAULIC GEAR PUMP HI-LOW

HONDA GX630-F-M 20 HP TWIN CYLINDER AIR COOLED PETROL ENGINE,
FLOWFIT BELL HOUSING AND DRIVE COUPLING, HI-LOW GEAR PUMP GIVING 89.1L/MIN@ 3000PSI. 1ST PUMP 19CC/REV. 2ND PUMP 4.2CC/REV.
PLEASE NOTE AT SLOWER RPM PRESSURE CAN BE INCREASED AND FLOW CAN BE DECREASED WITH SLOWER ENGINE SETTING.
• COMES WITH RECOIL AND ELECTRIC START
• COMES WITH FUEL TANK AND MUFFLER FITTED

PART NO.	FLOW L/MIN	PRESSURE PSI	PUMP	ENGINE HP	ENGINE MODEL	LIST PRICE
ZZ004413	89.1	3000	2 STAGE	20	GX630-F-M	£3,889.41

HYDRAULIC CONTROL VALVES

MONOBLOCK DIRECTIONAL CONTROL VALVES.....71
SLICE DIRECTIONAL CONTROL VALVES.....73
HANDLEVERS.....76
SPOOLS – additions for valves.....76
VALVE CONTROL KITS – additions for valves.....76
SOLENOID DIVERTER VALVES 3 way and 6 way.....79
LEVER OPERATED DIVERTER VALVES.....79

BUCHER HYDRAULICS

FLOWFIT

50% OFF ALL PRICES

MONOBLOCK DIRECTIONAL CONTROL VALVES TYPE HDM

System Description

The valves of the HDM range are compact monoblock valves, available in 4 sizes. With the combination of different directional valves, stops, operators and shock-and/or anti-cavitation valves* this monoblock is adaptable to any requirements.
The HDM valves are available with open centre, high pressure carryover or closed centre operation.

If you can't see what you need – please ask!

- **Lever control**
- **Electro hydraulic on/off**
- **Parallel and series circuits**
- **Unload in neutral, high pressure carryover**
- **Ancillary Valves: shock-and anticavitation valves, shock valves, check valves**

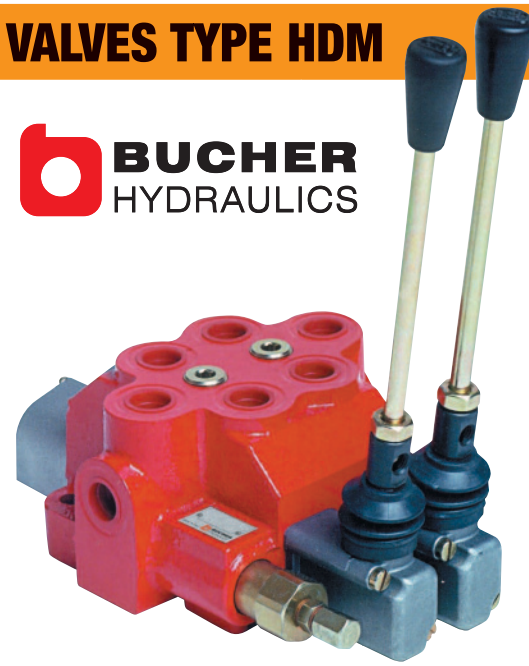

TECHNICAL DATA		HDM140	HDM 11 P	HDM 11 S	HDM 18	HDM 25	SD18
NUMBER OF SPOOLS		1	2-6	1-6	1-4	1-2	1-6
FLOW RATE	L/MIN	40	45	45	70	100	160
INLET PRESSURE MAX.	BAR	320	400	400	400	400	250
RETURN PRESSURE MAX.	BAR	30	30	30	30	30	25
FLUID		MINERAL OIL TO DIN 51524					
OPERATING TEMPERATURE	°C	-20 TO +80					
VISCOSITY RANGE	MM2/S	16 TO 75					
FILTRATION	MICRON	30					
DIRECTIONAL VALVE							
CONTROLS AVAILABLE	LEVER / CABLE CONTROL / ELECTRO HYDRAULIC (ON/OFF) / ELECTRO HYDRAULIC PROPORTIONAL						

SPOOLS AVAILABLE – PLUS MANY MORE

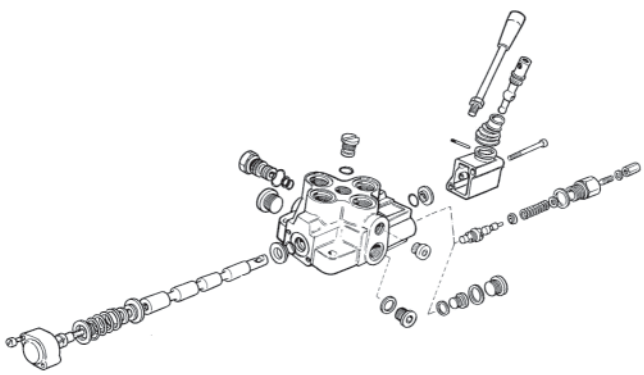

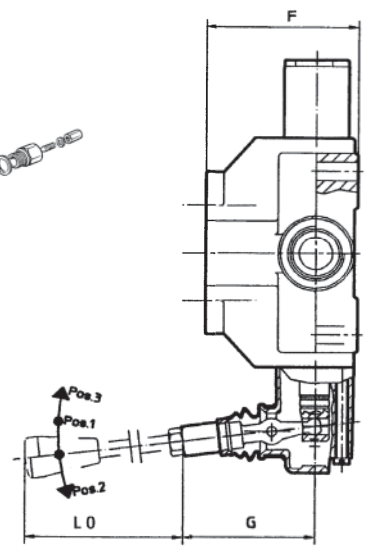

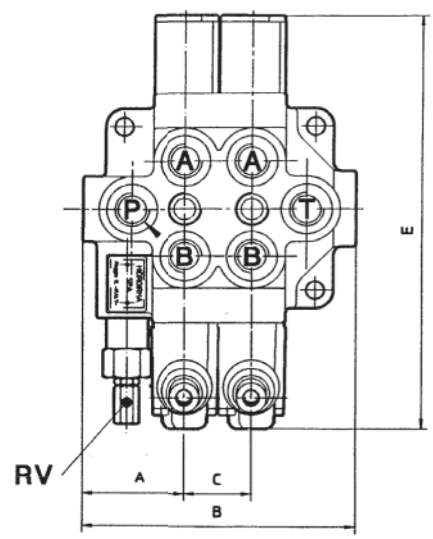

LEVER LENGTHS – mm					
HDM 140	150	200	250	300	-
HDM 11	150	200	250	300	-
HDM 18	-	185	250	300	350
HDM 25	-	185	250	300	350
SD18	150	200	250	300	-

	A	B	C	E	F	G	P T A+B
HDM 140*	35	85	0	187	53	87	3/8" BSP
HDM 11 P	51.3	28.6 X **S** + 128.6	28.6	180	57	66	3/8" BSP
HDM 11 S	53.0	36 X **S** + 111	36	180	67	66	1/2" BSP
HDM 18	60	40 X **S** + 115	40	216	72	73	1/2" BSP
HDM 25	62	40 X **S** + 124	40	252	90	80	3/4" BSP
SD 18	85	53 X **S** + 160	53	320	92	124	3/4" BSP
S = NUMBER OF SPOOL -1							
* SINGLE MONOBLOCK VALVE ONLY							

3/8" PORTS MAX FLOW 40L/MIN MONOBLOCK HDM140 SERIES C/W MAIN RELIEF VALVE			
PART NO	DESCRIPTION	OPERATING PRESSURE BAR	PRICE
200.0514.12.024	HDM140 K02150A01 1 BANK DOUBLE ACTING SPRING RETURN LEVER OPERATED	320	£76.29
200.0514.12.047	HDM140 K02150G01 1 BANK SINGLE ACTING SPRING RETURN LEVER OPERATED	320	£76.29
200.0514.12.044	HDM140 K02150C03 1 BANK MOTOR SPOOL 3 POSITION DETENT LEVER OPERATED	320	£76.29

3/8" PORTS MAX FLOW 45L/MIN MONOBLOCK HDM11/P SERIES C/W MAIN RELIEF VALVE			
PART NO	DESCRIPTION	OPERATING PRESSURE BAR	PRICE
200.0611.22.182	HDM11P/2K04 150 A01 A01 2 BANK DOUBLE ACTING SPRING RETURN LEVER OPERATED	400	£178.59
200.0611.32.164	HDM11P/3KO4 150 A01 A01 A01 3 BANK DOUBLE ACTING SPRING RETURN LEVER OPERATED	400	£251.86
200.0611.42.124	HDM11P/4K04 150 A01 A01 A01 A01 4 BANK DOUBLE ACTING SPRING RETURN LEVER OPERATED	400	£304.52
200.0611.52.078	HDM11P/5K04 150 A01 A01 A01 A01 A01 5 BANK DOUBLE ACTING SPRING RETURN LEVER OPERATED	400	£364.05
200.0611.62.026	HDM11P/6K04 150 A01 A01 A01 A01 A01 A01 6 BANK DOUBLE ACTING SPRING RETURN LEVER OPERATED	400	£412.13

1/2" PORTS MAX FLOW 45L/MIN MONOBLOCK HDM11/S SERIES C/W MAIN RELIEF VALVE			
PART NO	DESCRIPTION	OPERATING PRESSURE BAR	PRICE
200.0611.13.042	HDM11S/1K03 150 A01 1 BANK DOUBLE ACTING SPRING RETURN LEVER OPERATED	400	£144.24
200.0611.23.043	HDM11S/2K03 150 A01 A01 2 BANK DOUBLE ACTING SPRING RETURN LEVER OPERATED	400	£222.09
200.0611.33.044	HDM11S/3K03 150 A01 A01 A01 3 BANK DOUBLE ACTING SPRING RETURN LEVER OPERATED	400	£288.49
200.0611.43.040	HDM11S/4K03 150 A01 A01 A01 A01 4 BANK BANK DOUBLE ACTING SPRING RETURN LEVER OPERATED	400	£354.89
200.0611.53.037	HDM11S/5KO3 150 A01 A01 A01 A01 A01 5 BANK DOUBLE ACTING SPRING RETURN LEVER OPERATED	400	£430.44
200.0611.63.015	HDM11S/6K03 150 A01 A01 A01 A01 A01 A01 6 BANK DOUBLE ACTING SPRING RETURN LEVER OPERATED	400	£455.63

1/2" PORTS MAX FLOW 70L/MIN MONOBLOCK HDM 18 SERIES C/W MAIN RELIEF VALVE			
PART NO	DESCRIPTION	OPERATING PRESSURE BAR	PRICE
200.0718.13.002	HDM18/1K02 150/A08 1 BANK DOUBLE ACTING SPRING RETURN LEVER OPERATED	400	£206.06
200.0718.23.001	HDM18/2K02 150/A08 A08 2 BANK DOUBLE ACTING SPRING RETURN LEVER OPERATED	400	£320.54
200.0718.33.008	HDM18/3K02 150/A08 A08 A08 3 BANK DOUBLE ACTING SPRING RETURN LEVER OPERATED	400	£446.47
200.0718.43.007	HDM18/4K02 150/A08 A08 A08 A08 4 BANK DOUBLE ACTING SPRING RETURN LEVER OPERATED	400	£544.92

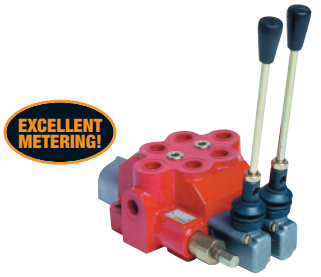

3/4" PORTS MAX FLOW 100L/MIN MONOBLOCK HDM 25 SERIES C/W MAIN RELIEF VALVE			
PART NO	DESCRIPTION	OPERATING PRESSURE BAR	PRICE
200.0725.14.001	HDM25/1K03 150/A01 L100 1 BANK DOUBLE ACTING SPRING RETURN LEVER OPERATED	320	£290.78
200.0725.24.001	HDM25/2KO3 150/A01/A01 L100 2 BANK DOUBLE ACTING SPRING RETURN LEVER OPERATED	320	£522.03

3/4" PORTS MAX FLOW 160L/MIN MONOBLOCK SD18 SERIES C/W MAIN RELIEF VALVE			
PART NO	DESCRIPTION	OPERATING PRESSURE BAR	PRICE
106111001	SD18/1-P(KG3)/18L/AET 1 BANK DOUBLE ACTING SPRING RETURN LEVER OPERATED	250	£651.43
106211001	SD18/2-P(KG3)/18LX2/AET 2 BANK DOUBLE ACTING SPRING RETURN LEVER OPERATED	250	£961.30
106311001	SD18/3-P(KG3)/18LX3/AET 3 BANK DOUBLE ACTING SPRING RETURN LEVER OPERATED	250	£1,302.27
106411001	SD18/4-P(KG3)/18LX4/AET 4 BANK DOUBLE ACTING SPRING RETURN LEVER OPERATED	250	£1,595.45
106511001	SD18/5-P(KG3)/18LX5/AET 5 BANK DOUBLE ACTING SPRING RETURN LEVER OPERATED	250	£1,913.97
106611001	SD18/6-P(KG3)/18LX6/AET 6 BANK DOUBLE ACTING SPRING RETURN LEVER OPERATED	250	£2,306.00

50% OFF ALL PRICES

SLICE DIRECTIONAL CONTROL VALVES TYPE HDS

System Description

The HDS valve range represents a flexible unit construction, the elements of which may be combined into one valve unit as required.
The valves are available connected in parallel and in series circuits.
A typical valve unit comprises an inlet plate, the directional control valve sections and end plate.
With all valves in neutral the flow returned to the tank (open centre). In addition high pressure carry over or closed centre circulation are available.

- **Lever control**
- **Electro hydraulic on/off and proportional operation**
- **Open centre, closed centre and high pressure carryover**
- **Pilot operated check valves**
- **Priority flow control valves**
- **Shock, anticavitation and combined shock and anticavitation valves**

TECHNICAL DATA		HDS 11	HDS 15	HDS 19	HDS 20	HDS 30	SD25
NUMBER OF SPOOLS		1-10	1-10	1-10	1-10	1-10	1-10
FLOW RATE	L/MIN	45	60	70	80	120	240
INLET PRESSURE MAX.	BAR	320	320	320	320	320	315
RETURN PRESSURE MAX.	BAR	30	30	30	30	30	25
FLUID		MINERAL OIL TO DIN 51524					
OPERATING TEMPERATURE	°C	-20 TO +80					
VISCOSITY RANGE	MM2/S	16-75					
FILTRATION	MICRON	≤30					
DIRECTIONAL VALVE							
CONTROLS AVAILABLE	LEVER / JOYSTICK FOR 2 VALVES / CABLE CONTROL / HYDRAULIC OR PNEUMATIC ON/OFF						
ELECTRO HYDRAULIC (ON/OFF) / ELECTRO PNEUMATIC PROPORTIONAL							

SPOOLS AVAILABLE – PLUS MANY MORE

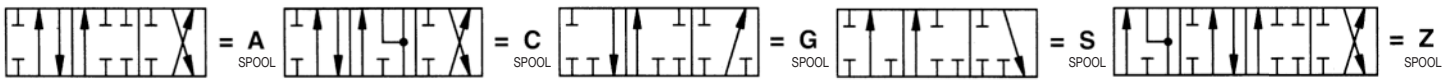

	A	B	C	D	E	F	G	P+T A+B
HDS 11	40	31.8 X W + 101.6	31.8	40	171	75	122	3/8" BSP
HDS 15	44	4 0X W + 86	40	21	179	88	115	1/2" BSP
HDS 20	40	40 X W +100	40	40	252	106	121	3/4" 1/2" BSP
HDS 30	50	4 4X W + 124	44	50	262	113	126	1" 3/4"
SD 25	N/A	6 2X W + 173	N/A	62	356	N/A	137	P 1" T 1 1/4" 1"
W = WIDTH OF DIRECTIONAL SECTIONS (MAX. 10 SECTIONS PER CONTROL BLOCK)								

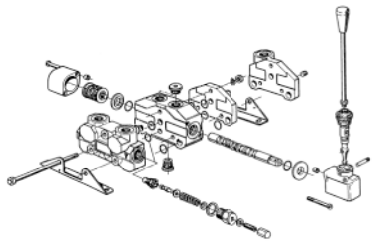

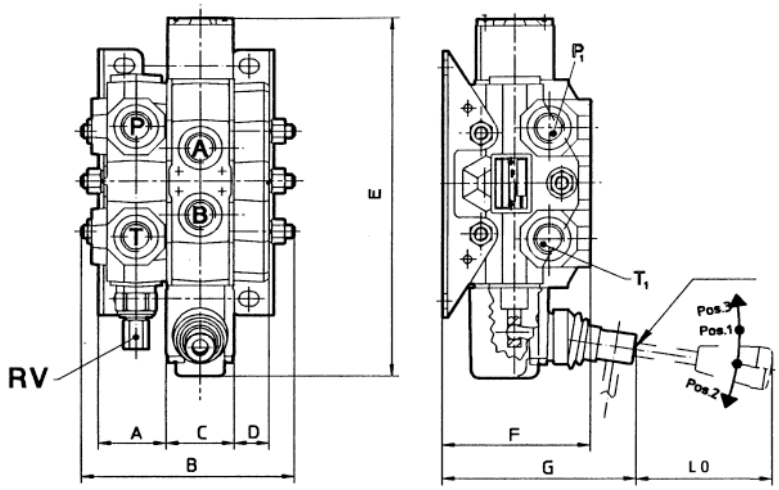

LEVER LENGTHS – mm						
HDM 140	150	200	250	300	-	
HDS 11	150	200	150	300	-	-
HDS 15	-	185	250	300	350	-
HDS 20	-	185	250	300	350	-
HDS 30	-	185	250	300	350	-
SD25	150	200	250	300	-	-

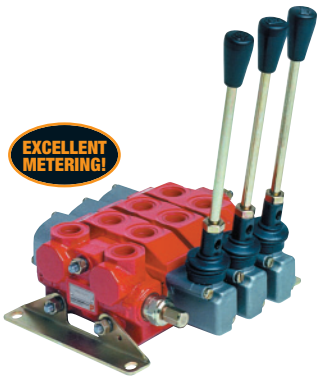

HDS11 SLICE VALVE 3/8" PORTS MAX FLOW 45L/MIN C/W MAIN RELIEF AND MOUNTING FEET.				
PART NO	DESCRIPTION BUCHER HYDRAULICS	MAX FLOW L/MIN	OPERATING PRESSURE BAR	PRICE
HDS11/1/STD	1 BANK DOUBLE ACTING SPRING RETURN LEVER OPERATED	45	320	£214.75
HDS11/2/STD	2 BANK DOUBLE ACTING SPRING RETURN LEVER OPERATED	45	320	£325.71
HDS11/3/STD	3 BANK DOUBLE ACTING SPRING RETURN LEVER OPERATED	45	320	£435.26
HDS11/4/STD	4 BANK DOUBLE ACTING SPRING RETURN LEVER OPERATED	45	320	£544.79
HDS11/5/STD	5 BANK DOUBLE ACTING SPRING RETURN LEVER OPERATED	45	320	£655.77
HDS11/6 /STD	6 BANK DOUBLE ACTING SPRING RETURN LEVER OPERATED	45	320	£766.74
HDS11/7/STD	7 BANK DOUBLE ACTING SPRING RETURN LEVER OPERATED	45	320	£876.26
HDS11/8/STD	8 BANK DOUBLE ACTING SPRING RETURN LEVER OPERATED	45	320	£987.25
HDS11/9/STD	9 BANK DOUBLE ACTING SPRING RETURN LEVER OPERATED	45	320	£1,098.22
HDS11/10/STD	10 BANK DOUBLE ACTING SPRING RETURN LEVER OPERATED	45	320	£1,207.75

HDS15 SLICE VALVE 1/2"PORTS MAX FLOW 60L/MIN C/W MAIN RELIEF AND MOUNTING FEET.				
PART NO	DESCRIPTION BUCHER HYDRAULICS	MAX FLOW L/MIN	OPERATING PRESSURE BAR	PRICE
HDS15/1/STD	1 BANK DOUBLE ACTING SPRING RETURN LEVER OPERATED	60	320	£270.95
HDS15/2/STD	2 BANK DOUBLE ACTING SPRING RETURN LEVER OPERATED	60	320	£409.31
HDS15/3/STD	3 BANK DOUBLE ACTING SPRING RETURN LEVER OPERATED	60	320	£547.67
HDS15/4/STD	4 BANK DOUBLE ACTING SPRING RETURN LEVER OPERATED	60	320	£684.59
HDS15/5/STD	5 BANK DOUBLE ACTING SPRING RETURN LEVER OPERATED	60	320	£822.95
HDS15/6/STD	6 BANK DOUBLE ACTING SPRING RETURN LEVER OPERATED	60	320	£961.30
HDS15/7/STD	7 BANK DOUBLE ACTING SPRING RETURN LEVER OPERATED	60	320	£1,099.67
HDS15/8/STD	8 BANK DOUBLE ACTING SPRING RETURN LEVER OPERATED	60	320	£1,237.86
HDS15/9/STD	9 BANK DOUBLE ACTING SPRING RETURN LEVER OPERATED	60	320	£1,376.39
HDS15/10/STD	10 BANK DOUBLE ACTING SPRING RETURN LEVER OPERATED	60	320	£1,513.30

HDS20 SLICE VALVE 1/2" PORTS (A+B), 3/4" PORTS (P+T) MAX FLOW 80 L/MIN C/W MAIN RELIEF AND MOUNTING FEET.				
PART NO	DESCRIPTION BUCHER HYDRAULICS	MAX FLOW L/MIN	OPERATING PRESSURE BAR	PRICE
HDS20/1/STD	1 BANK DOUBLE ACTING SPRING RETURN LEVER OPERATED	80	320	£354.44
HDS20/2/STD	2 BANK DOUBLE ACTING SPRING RETURN LEVER OPERATED	80	320	£523.17
HDS20/3/STD	3 BANK DOUBLE ACTING SPRING RETURN LEVER OPERATED	80	320	£691.79
HDS20/4/STD	4 BANK DOUBLE ACTING SPRING RETURN LEVER OPERATED	80	320	£860.42
HDS20/5/STD	5 BANK DOUBLE ACTING SPRING RETURN LEVER OPERATED	80	320	£1,029.05
HDS20/6/STD	6 BANK DOUBLE ACTING SPRING RETURN LEVER OPERATED	80	320	£1,197.66
HDS20/7/STD	7 BANK DOUBLE ACTING SPRING RETURN LEVER OPERATED	80	320	£1,364.86
HDS20/8/STD	8 BANK DOUBLE ACTING SPRING RETURN LEVER OPERATED	80	320	£1,545.00
HDS20/9/STD	9 BANK DOUBLE ACTING SPRING RETURN LEVER OPERATED	80	320	£1,710.33
HDS20/10/STD	10 BANK DOUBLE ACTING SPRING RETURN LEVER OPERATED	80	320	£1,866.60

50% OFF ALL PRICES

EXCELLENT METERING!

HDS30 SLICE VALVE 3/4" PORTS MAX FLOW 120L/MIN C/W MAIN RELIEF AND MOUNTING FEET.				
PART NO	DESCRIPTION (BUCHER HYDRAULICS)	MAX FLOW L/MIN	OPERATING PRESSURE BAR	PRICE
HDS30/1/STD	1 BANK DOUBLE ACTING SPRING RETURN LEVER OPERATED	120	320	£469.83
HDS30/2/STD	2 BANK DOUBLE ACTING SPRING RETURN LEVER OPERATED	120	320	£662.91
HDS30/3/STD	3 BANK DOUBLE ACTING SPRING RETURN LEVER OPERATED	120	320	£860.42
HDS30/4/STD	4 BANK DOUBLE ACTING SPRING RETURN LEVER OPERATED	120	320	£1,047.78
HDS30/5/STD	5 BANK DOUBLE ACTING SPRING RETURN LEVER OPERATED	120	320	£1,245.24
HDS30/6/STD	6 BANK DOUBLE ACTING SPRING RETURN LEVER OPERATED	120	320	£1,445.58
HDS30/7/STD	7 BANK DOUBLE ACTING SPRING RETURN LEVER OPERATED	120	320	£1,627.15
HDS30/8/STD	8 BANK DOUBLE ACTING SPRING RETURN LEVER OPERATED	120	320	£1,824.60
HDS30/9/STD	9 BANK DOUBLE ACTING SPRING RETURN LEVER OPERATED	120	320	£2,011.96
HDS30/10/STD	10 BANK DOUBLE ACTING SPRING RETURN LEVER OPERATED	120	320	£2,205.10

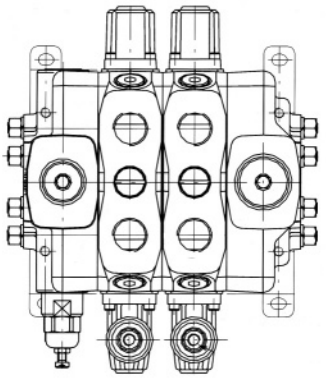

EXCELLENT METERING!

SD25 SLICE VALVE 1"PORTS MAX FLOW 240L/MIN C/W MAIN RELIEF VALVE AND MOUNTING FEET.				
PART NO	DESCRIPTION (FLOWFIT)	MAX FLOW L/MIN	OPERATING PRESSURE BAR	PRICE
SD25/1/STD	1 BANK DOUBLE ACTING SPRING RETURN LEVER OPERATED	240	315	£1,337.47
SD25/2/STD	2 BANK DOUBLE ACTING SPRING RETURN LEVER OPERATED	240	315	£1,894.35
SD25/3/STD	3 BANK DOUBLE ACTING SPRING RETURN LEVER OPERATED	240	315	£2,447.22
SDS5/4/STD	4 BANK DOUBLE ACTING SPRING RETURN LEVER OPERATED	240	315	£3,009.31
SD25/5/STD	5 BANK DOUBLE ACTING SPRING RETURN LEVER OPERATED	240	315	£3,567.08
SD25/6/STD	6 BANK DOUBLE ACTING SPRING RETURN LEVER OPERATED	240	315	£4,127.72
SD25/7/STD	7 BANK DOUBLE ACTING SPRING RETURN LEVER OPERATED	240	315	£4,688.36
SD25/8/STD	8 BANK DOUBLE ACTING SPRING RETURN LEVER OPERATED	240	315	£5,249.01
SD25/9/STD	9 BANK DOUBLE ACTING SPRING RETURN LEVER OPERATED	240	315	£5,808.21
SD25/10/STD	10 BANK DOUBLE ACTING SPRING RETURN LEVER OPERATED	240	315	£6,367.41

FLOW 250 SLICE VALVE 1" SERVICE PORTS MAX FLOW 250L/MIN C/W MAIN RELIEF AND MOUNTING FEET. INLET 1 1/4" AND OUTLET 1 1/2"				
PART NO	DESCRIPTION (FLOWFIT)	MAX FLOW L/MIN	OPERATING PRESSURE BAR	PRICE
FLOW250/1/STD	1 BANK DOUBLE ACTING SPRING RETURN LEVER OPERATED	250	350	£787.62
FLOW250/2/STD	2 BANK DOUBLE ACTING SPRING RETURN LEVER OPERATED	250	350	£1,110.46
FLOW250/3/STD	3 BANK DOUBLE ACTING SPRING RETURN LEVER OPERATED	250	350	£1,447.03
FLOW250/4/STD	4 BANK DOUBLE ACTING SPRING RETURN LEVER OPERATED	250	350	£1,781.31
FLOW250/5/STD	5 BANK DOUBLE ACTING SPRING RETURN LEVER OPERATED	250	350	£2,117.88
FLOW250/6/STD	6 BANK DOUBLE ACTING SPRING RETURN LEVER OPERATED	250	350	£2,454.45
FLOW250/7/STD	7 BANK DOUBLE ACTING SPRING RETURN LEVER OPERATED	250	350	£2,793.31
FLOW250/8/STD	8 BANK DOUBLE ACTING SPRING RETURN LEVER OPERATED	250	350	£3,129.88
FLOW250/9/STD	9 BANK DOUBLE ACTING SPRING RETURN LEVER OPERATED	250	350	£3,468.74
FLOW250/10/STD	10 BANK DOUBLE ACTING SPRING RETURN LEVER OPERATED	250	350	£3,805.32

HANDLEVERS JUST ADD THE PRICE TO THE VALVE SELECTED

BUCHER HYDRAULICS

PART NO		HDM140	HDM11	HDM18	HDM25	SD18	HDS11	HDS15	HDS20	SD25	HDS30	PRICE
200.7022.1019.0	M8 X 150MM	YES	YES	NO	NO	NO	YES	NO	NO	NO	NO	£3.95
200.7022.1003.0	M8 X 200MM	YES	YES	NO	NO	NO	YES	NO	NO	NO	NO	£3.95
200.7022.1005.0	M8 X 250MM	YES	YES	NO	NO	NO	YES	NO	NO	NO	NO	£4.56
200.7022.1006.0	M8 X 300MM	YES	YES	NO	NO	NO	YES	NO	NO	NO	NO	£4.56
200.7022.2001.0	M10 X 185MM	NO	NO	YES	YES	NO	NO	YES	YES	NO	YES	£4.87
200.7022.2003.0	M10 X 250MM	NO	NO	YES	YES	NO	NO	YES	YES	NO	YES	£4.87
200.7022.2004.0	M10 X 300MM	NO	NO	YES	YES	NO	NO	YES	YES	NO	YES	£4.87
200.7022.2005.0	M10 X 350MM	NO	NO	YES	YES	NO	NO	YES	YES	NO	YES	£5.05
170013025	M12 X 250MM	NO	NO	NO	NO	YES	NO	NO	NO	YES	NO	£9.35

SPOOLS JUST ADD THE PRICE TO THE VALVE SELECTED

FLOWFIT BUCHER HYDRAULICS

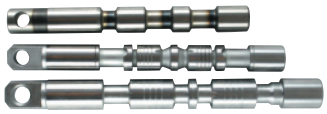

MOTOR SPOOL TYPE 'C'

DESCRIPTION	PRICE
MOTOR SPOOL TYPE 'C' FOR HDM140, HDM11, HDM18, HDM25, SD18, HDS11, HDS15, HDS20 and SD25	£30.25
MOTOR SPOOL TYPE 'J' FOR FLOW250	£119.06

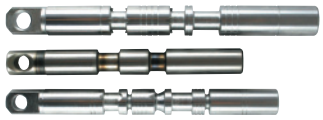

SINGLE ACTING SPOOL TYPE 'G'

DESCRIPTION	PRICE
SINGLE ACTING SPOOL TYPE 'G' FOR HDM140, HDM11, HDM18, HDM25, SD18, HDS11, HDS15, HDS20 and SD25	£30.25
SINGLE ACTING SPOOL TYPE 'T' FOR FLOW250	£119.06

4 POSITION FLOATING FOURTH 'Z' SPOOL

DESCRIPTION	PRICE
4 POSITION FLOATING FOURTH 'Z' SPOOL FOR HDM140,HDM11S and HDS11	£73.50
4 POSITION FLOATING FOURTH 'Z' SPOOL FOR HDM18 and HDS15	£86.46
4 POSITION FLOATING FOURTH 'Z' SPOOL FOR HDS20 and HDS30	£92.23
4 POSITION FLOATING FOURTH 'F' SPOOL FOR FLOW250	£119.06

VALVE CONTROL KITS JUST ADD THE PRICE TO THE VALVE SELECTED

FLOWFIT BUCHER HYDRAULICS

3 POSITION DETENT KIT

DESCRIPTION	PRICE
FOR HDM140,HDM11 and HDS11	£15.85
FOR HDM18,HDM25,HDS20 and HDS30	£19.38
FOR SD18 and SD25	£43.23
FOR FLOW250	£155.69

PNEUMATIC ON-OFF

PART NO.	DESCRIPTION	PRICE
200.9686.5049.0	FOR HDM140,HDM11S and HDS11	£118.18
200.9686.5011.0	FOR HDM18/HDS15	£121.06
200.9686.5013.0	FOR HDM25/HDS20/HDS30	£123.61
FOR FLOW250		POA

PNEUMATIC PROPORTIONAL CONTROL

PART NO.	DESCRIPTION	PRICE
200.9686.5009.0	FOR HDM18 and HDS15	£133.93
200.9686.5010.0	FOR HDM25/HDS20/HDS30	£146.50
FOR FLOW250		POA

ELECTRO-PNEUMATIC ON-OFF

PART NO.	DESCRIPTION	PRICE
200.9686.6023.0	12VDC FOR HDM18/HDS15	£410.61
200.9686.6026.0	24VDC FOR HDM18/HDS15	£410.61
200.9686.6024.0	12VDC FOR HDM25/HDS20/HDS30	£410.61
200.9686.6027.0	24VDC FOR HDM25 HDS20/HDS30	£410.61
FOR FLOW250		POA

ADDITIONS FOR VALVES

HYDRAULIC ON-OFF VALVE

PART NO.	DESCRIPTION	PRICE
200.9686.5049.0	FOR HDM140/HDM11S/HDS11	£117.61
200.9686.5011.0	FOR HDM18/HDS15	£121.11
200.9686.5013.0	FOR HDM25,HDS20/HDS30	£123.61
FOR FLOW250		POA

HYDRAULIC PROPORTIONAL VALVE

PART NO.	DESCRIPTION	PRICE
200.9686.5019.0	FOR HDM18/HDS15	£105.06
200.9686.5020.0	FOR HDM25 AND HDS20	£112.08
200.9686.5017.0	FOR HDS30	£111.86
FOR FLOW250		POA

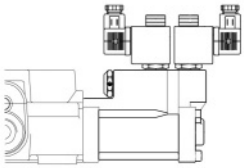

ELECTRO-HYDRAULIC ON-OFF INTERNAL PILOT VERSION VALVE

PART NO.	DESCRIPTION	PRICE
200.9686.6038.0	FOR HDM18/HDS15	£505.54
200.9686.6039.0	FOR HDS20/HDS30	£505.54

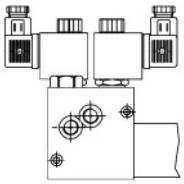

ELECTRO-HYDRAULIC ON-OFF EXTERNAL PILOT VERSION VALVE

PART NO.	DESCRIPTION	PRICE
200.9686.6031.0	FOR HDM18/HDS15	£639.65
200.9686.6032.0	FOR HDS20/HDS30	£639.65
200.9686.6051.0	FOR HDM25	£639.65

ELECTRO MAGNETIC ON-OFF VALVE

PART NO.	DESCRIPTION	PRICE
200.9686.1179.0	12VDC FOR HDM18 AND HDS15	£381.71
200.9686.1180.0	24VDC FOR HDM18 AND HDS15	£381.71

ELECTRO MAGNETIC ON-OFF VALVE

DESCRIPTION	PRICE
FOR HDS11	£200.90
FOR HDS15	£200.90

MICROSWITCH KITS FOR VALVES

DESCRIPTION		PRICE
200.9686.1064.0	Assembly for HDM140, HDM11 AND HDS11	£52.08
200.9686.1065.0	Assembly for HDM18 and HDS15	£64.10
200.9686.1054.0	Assembly for HDS20 and HDS30	£108.16

DESCRIPTION		PRICE
200.9625.0001.0	Microswitch only for HDM18, HDS15, HDS20 and HDS30	£46.06
200.9625.0006.0	Microswitch only for HDM11 and HDS11	£39.05

MISCELLANEOUS ADD-ONS

JUST ADD THE PRICE TO THE VALVE SELECTED

FLOWFIT

BUCHER HYDRAULICS

HIGH PRESSURE CARRYOVER CONNECTOR (ADD ON PER VALVE)

DESCRIPTION	PRICE
HDM11	£12.50
HDM18	£20.35
HDM25	£21.26
SD18	£26.81
HDS11	£12.50
HDS15	£20.35
HDS20	£21.24
HDS30	£22.56
SD25	£27.84
FLOW250	£28.16

NOTE: HDM140 NOT AVAILABLE

ADDITIONS FOR VALVES

CLOSED CENTRE VALVE SOLUTIONS (ADD ON PER VALVE)

DESCRIPTION	PRICE
HDM140	£7.61
HDM11	£7.61
HDM18	£18.30
HDM25	£18.30
SD18	£22.67
HDS11	£7.61
HDS15	£18.34
HDS20	£19.18
HDS30	£20.50
SD25	£17.33
FLOW250	£17.33

RELIEF VALVE BLANKING PLUG

DESCRIPTION	PRICE
RELIEF BLANKING PLUG FOR HDM140, HDM11, HDM18, HDM25, SD18, HDS11, HDS15, HDS20, HDS30 and SD25	£18.36
FLOW250	£18.32

REMOTE CABLE ASSEMBLY

DESCRIPTION		PRICE
1 METRE CABLE ASSEMBLY	SUITS ALL VALVES EXCEPT SD18/SD25	£134.60
1.5 METRE CABLE ASSEMBLY		£142.37
2.5 METRE CABLE ASSEMBLY		£150.63
4 METRE CABLE ASSEMBLY		£167.13
5 METRE CABLE ASSEMBLY		£185.71
FLOW250		POA

JOYSTICK ASSEMBLY

DESCRIPTION	PRICE
JOYSTICK ASSEMBLY FOR HDM11, HDM18, HDM25, HDS11, HDS15, HDS20 and HDS30	£142.37
FLOW250	POA

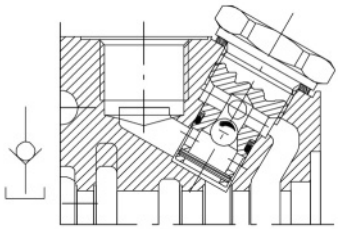

ANTI-CAVITATION VALVES TYPE 'C'
C/A OR C C/AB

DESCRIPTION	PRICE
C/A OR B FOR HDS11	£28.77
C/AB FOR HDS11	£37.67
C/A OR B FOR HDS15	£42.33
C/AB FOR HDS15	£55.60
C/A OR B FOR HDS20/HDS30	£58.98

ANTI-SHOCK AND ANTI-CAVITATION VALVES TYPE 'UC'
UC/A UCAB

DESCRIPTION	PRICE
UC/A OR B FOR HDS11	£60.55
UC/AB FOR HDS11	£88.99
UC/A OR B FOR HDS15	£66.73
UC/AB FOR HDS15	£117.42
UC/A OR B FOR HDS20/HDS30	£126.04
UC/AB FOR HDS20/HDS30	£171.19
EK20KOI FOR FLOW250	£91.58

ANTI-SHOCK VALVES TYPE 'OA'
OA/A OR B OAAB

DESCRIPTION	PRICE
OA/A OR B FOR HDS11	£55.60
OA/AB FOR HDS11	£73.52
OA/A OR B FOR HDS15	£67.35
OA/AB FOR HDS15	£92.71
OA/A OR B FOR HDS20/HDS30	£75.45
OA/AB FOR HDS20/HDS30	£99.52

FLOWFIT's extensive product range includes three types of diverter valves. DF and DH versions are available with manual and mechanical controls, whilst the DFE versions are solenoid operated.

SOLENOID DIVERTER VALVES

DFE052
3 WAY
3/8" BSP

DFE20
3 WAY
3/4" BSP

Diverters are an added extra facility to the directional control valve when it is needed for a sequence of operations, such as a safety operation or to control a selected actuator.

3 WAY SOLENOID DIVERTER VALVES

PART NUMBER	PORT SIZE BSP	TYPE	VOLTAGE	NOMINAL FLOW L/MIN	MAX PRESSURE STANDARD (BAR)	MAX PRESSURE WITH DRAIN (BAR)	WEIGHT (KG)	PRICE
12A240020	3/8"	DFE052	12V DC	30	160	250	1.6	£295.06
12A240040	3/8"	DFE052	24V DC	30	160	250	1.6	£295.06
12A440013	1/2"	DFE10	12V DC	60	160	250	2.9	£388.67
12A440025	1/2"	DFE10	24V DC	60	160	250	2.9	£388.91
12A640014	3/4"	DFE20	12V DC	110	160	250	4.2	£526.79
12A640026	3/4"	DFE20	24V DC	110	160	250	4.2	£526.79

6 WAY SOLENOID DIVERTER VALVES

PART NUMBER	PORT SIZE BSP	TYPE	VOLTAGE	NOMINAL FLOW L/MIN	MAX PRESSURE STANDARD (BAR)	MAX PRESSURE WITH DRAIN (BAR)	WEIGHT (KG)	PRICE
12A270033	3/8"	DFE052	12V DC	30	160	250	2	£334.68
12A270023	3/8"	DFE052	24V DC	30	160	250	2	£334.68
12A470013	1/2"	DFE10	12V DC	60	160	250	3.7	£410.25
12A470025	1/2"	DFE10	24V DC	60	160	250	3.7	£410.25
12A670014	3/4"	DFE20	12V DC	110	160	250	6.3	£577.56
12A670026	3/4"	DFE20	24V DC	110	160	250	6.3	£577.56

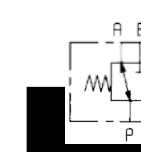

DFE10
6 WAY • 1/2" BSP

OPTIONAL EXTRAS

* Connect to tank to give max. pressure of 250 bar.

PART NUMBER	DESCRIPTION	PRICE
2X1001010	TYPE CO2 (ISO4400) 12/24V DC HERSCHMANN CONNECTOR	£5.17
5GIU001	DRAIN CONNECTOR TO SUIT DFE052	£16.88
5GIU004	DRAIN CONNECTOR TO SUIT DFE10	£19.66
5GIU007	DRAIN CONNECTOR TO SUIT DFE20	£23.88

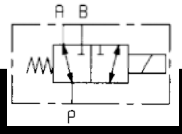

3 way

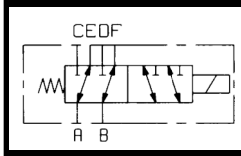

6 way

LEVER OPERATED DIVERTER VALVES 'DF' SERIES

DF5/3A/17L

DF5/6A/17L

PART NUMBER	DESCRIPTION – LEVER OPERATED	PORT SIZE BSP	FLOW RATE L/MIN	MAX. PRESS. BAR	PRICE
122052040	DF5/3A/12/L 3 PORT 2 POSITION DETENT	3/8"	60	315	£195.81
122054040	DF5/3A/17/L 3 PORT 2 POSITION SPRING CONTROL BIAS TO 'A' PORT	3/8"	60	315	£174.67
124052040	DF10/3A/12/L 3 PORT 2 POSITION DETENT	1/2"	90	315	£257.93
124054040	DF10/3A/17/L 3 PORT 2 POSITION SPRING CONTROL BIAS TO 'A' PORT	1/2"	90	315	£234.98
126052040	DF20/3A/12/L 3 PORT 2 POSITION DETENT	3/4"	140	315	£363.30
126054040	DF20/3A/17/L 3 PORT 2 POSITION SPRING CONTROL BIAS TO 'A' PORT	3/4"	140	315	£334.95
127052040	DF25/3A/12/L 3 PORT 2 POSITION DETENT	1"	280	315	£567.24
127054040	DF25/3A/17/L 3 PORT 2 POSITION SPRING CONTROL BIAS TO 'A' PORT	1"	280	315	£532.12
122082040	DF5/6A/12/L 6 PORT 2 POSITION DETENT	3/8"	60	315	£229.60
122084040	DF5/6A/17/L 6 PORT 2 POSITION SPRING CONTROL BIAS TO 'A' PORT	3/8"	60	315	£213.37
124082040	DF10/6A/12/L 6 PORT 2 POSITION DETENT	1/2"	90	315	£295.77
124084040	DF10/6A/17/L 6 PORT 2 POSITION SPRING CONTROL BIAS TO 'A' PORT	1/2"	90	315	£272.79
126082040	DF20/6A/12/L 6 PORT 2 POSITION DETENT	3/4"	140	315	£403.82
126084040	DF20/6A/17/L 6 PORT 2 POSITION SPRING CONTROL BIAS TO 'A' PORT	3/4"	140	315	£375.45

NEW

HYDRAULIC HOSE-REEL VALVE

NEW

HYDRAULIC HOSE-REEL VALVE LEVER OPERATED C/W FLOW CONTROL.....81
HYDRAULIC HOSE-REEL VALVE WITHOUT FLOW CONTROL 82

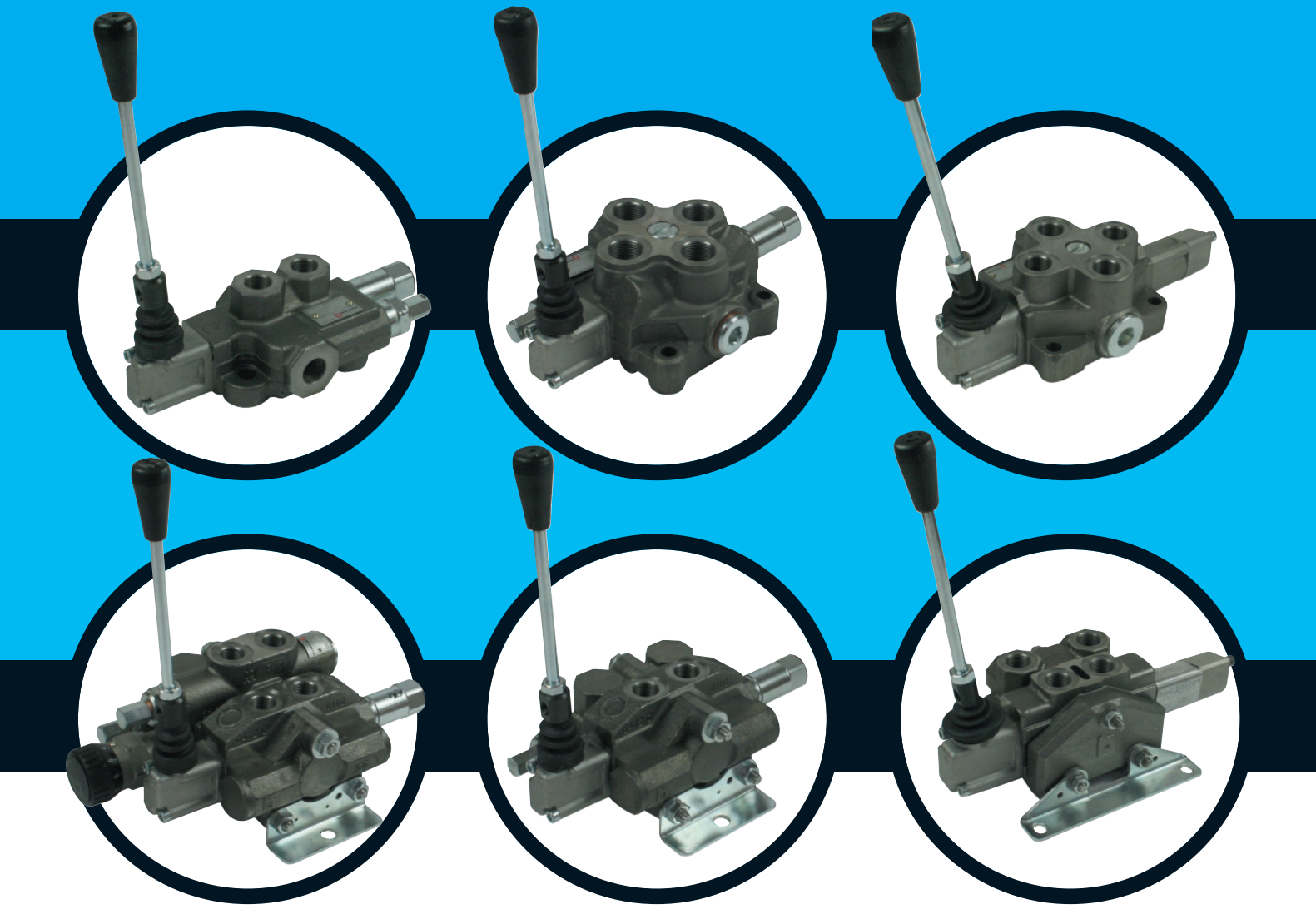

FLOWFIT

50% OFF ALL PRICES

HYDRAULIC HOSE-REEL VALVE LEVER OPERATED C/W FLOW CONTROL

GENERAL

This compact valve has been specifically designed to operate hose and cable reels.

The valve is fitted with an adjustable priority flow control on the inlet section, this is pressure compensated, the excess flow returns to tank.

The main relief is adjustable from 96 - 210 bar, other spring settings available upon request.

The lever operating spool slice has 4 positions.

The desired speed is selected using the speed control knob then the direction of the flow is selected using the spring centre lever, you can select forward, neutral or reverse. The lever can also be detented into a fourth position - commonly known as 'floating fourth', the fourth position allows the reel to 'free wheel' enabling the hose to be pulled off by hand. In the neutral position the reel is locked hydraulically.

Features

- Very compact
- Light weight
- Variable speed
- Pressure compensated maintaining constant speed irrespective of load or flow
- Adjustable relief valve
- Quality floating fourth kit??

ZZ001864

ZZ001865

SLICE VALVE						
PART NO	DESCRIPTION	FLOW L/MIN	MAX INTERMITTENT PEAK PRESSURE BAR	PORT SIZE BSP		PRICE £
				P, A + B	T	
ZZ001864	HDS11/2(15)T09/P04/K90 - 2 /K09Z04L100	45	320	3/8"	3/8"	£448.76
ZZ001865	HDS15/2(15)T03/P31/K90 - 3 /K03Z136L100	60	320	1/2"	1/2"	£558.66

HYDRAULIC HOSE-REEL VALVE WITHOUT FLOW CONTROL

These compact valves have been specifically designed to operate hose and cable reels. Each valve comes complete with a main relief valve fully adjustable from 96 - 210 bar, other spring settings available upon request.

The lever operating spool slice has 4 positions.

The direction of flow is selected using the spring centred lever valve, select forward, neutral or reverse. The lever can also be detented into a fourth position - commonly known as a “floating fourth”, the fourth position allows the reel to “free wheel” enabling the hose to be pulled off by hand. In the neutral position the reel is locked hydraulically and the pump will unload the flow to tank.

ZZ001868

ZZ001869

ZZ000208

ZZ001870

ZZ001871

MONOBLOCK VALVE

PART NO	DESCRIPTION	FLOW L/MIN	MAX INTERMITTENT PEAK PRESSURE BAR	PORT SIZE BSP		PRICE £
				P, A + B	T	
ZZ001868	HDM140/1(15)K02/Z04L100 C/W HANDLEVER	40	320	3/8"	3/8"	£137.38
ZZ001869	HDM115/1(15)KC3/Z04L100 C/W HANDLEVER	45	400	1/2"	1/2"	£230.10
ZZ000208	HDM18/1(15)K02/Z136L100 C/W HANDLEVER	70	400	1/2"	1/2"	£266.74
ZZ001881	HDM25/1(15)K03/Z128L100 C/W HANDLEVER	100	320	3/4"	3/4"	£325.12

SLICE VALVE

PART NO	DESCRIPTION	FLOW L/MIN	MAX INTERMITTENT PEAK PRESSURE BAR	PORT ???SIZE BSP		PRICE £
				P, A + B	T	
ZZ001870	HDS11/1(15)T09P04K04204 L100 C/W HAND LEVER	45	320	3/8"	3/8"	£253.00
ZZ001871	HDS15/1(15)T03P31K03Z136 L100 C/W HANDLEVER	60	320	1/2"	1/2"	£312.53
ZZ001882	HDS20/1(15)T02P021K02/Z128 L100 C/W HANDLEVER	80	320	3/4",1/2"+1/2"	3/4"	£382.36
ZZ001883	HDS30/1(15)T02P021K02Z125 L100 C/W HANDLEVER	100	320	3/4"	3/4"	£520.21

50% OFF ALL PRICES

ROTARY HYDRAULIC OPERATED LEVER VALVES

FLOWFIT

ROTARY HYDRAULIC OPERATED LEVER VALVES

GENERAL

All valves are double acting three position rotary control detent notched in the neutral position.

All valves have an integral main relief 30-280BAR/435PSI - 4060PSI.
Max operating pressure - see below.
Ports 3/8" - 1/2" and 3/4" BSP available.
Painted - Primer Expo Inver No1 and finished with black paint castalux CAS - RAL 9005.

These valves are fully marinised and will outlive an agricultural market valve by many years when used in a sea water environment.

The rotary versions give good speed control in conjunction with excellent spool metering.

Ideal for winch applications and built to withstand harsh on-deck conditions.

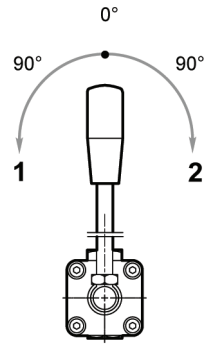

PART NO	DESCRIPTION	FLOW L/MIN	OPERATION PRESSURE BAR	PORT SIZE BSP		PRICE £
				P, A + B	T	
ZZ002054	Q25 F1S(N) - 103/RTLS - F3D	40	350	3/8"	3/8"	£190.04

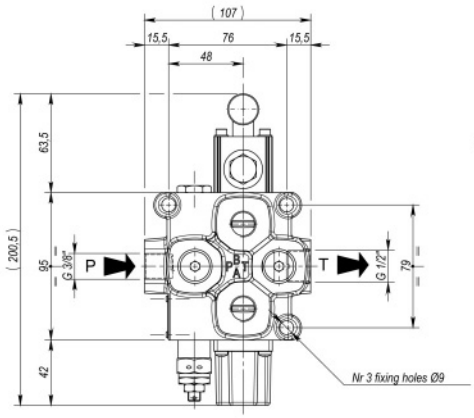

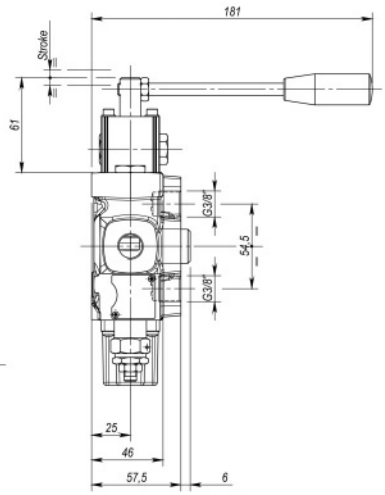

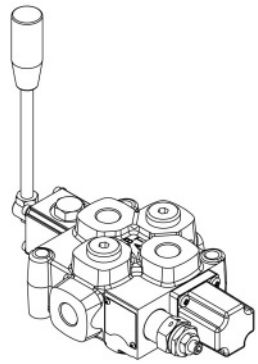

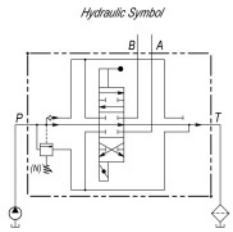

50% OFF ALL PRICES

PART NO	DESCRIPTION	FLOW L/MIN	OPERATION PRESSURE BAR	PORT SIZE BSP		PRICE £
				P, A + B	T	
ZZ001867	Q45 F1S(N) - 103/RTLS - F3D	60	350	1/2"	1/2"	£208.35

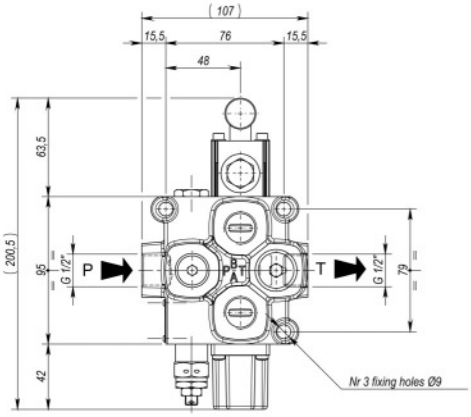

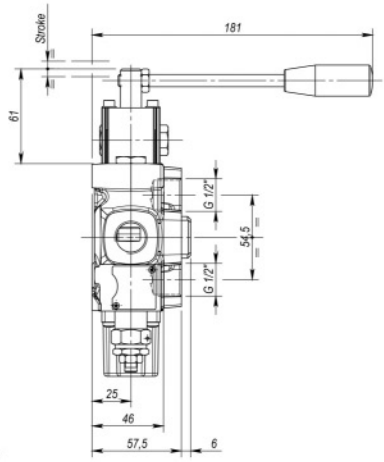

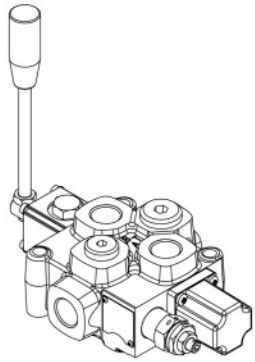

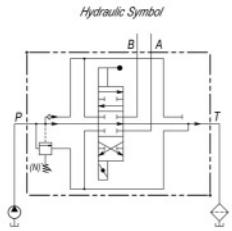

PART NO	DESCRIPTION	FLOW L/MIN	OPERATION PRESSURE BAR	PORT SIZE BSP		PRICE £
				P, A + B	T	
ZZ002055	Q75 F1S(N) - 103/RTLS - F3D	90	350	1/2"	3/4"	£331.99

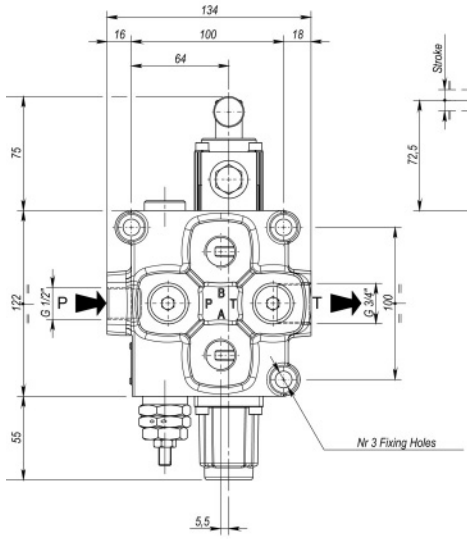

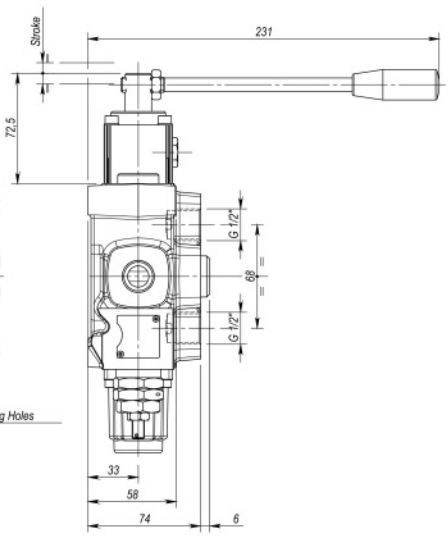

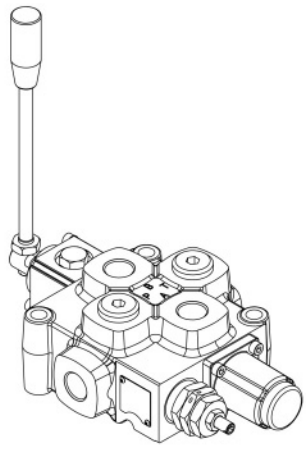

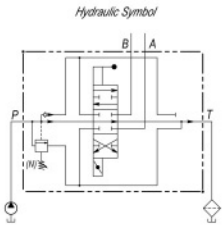

PART NO	DESCRIPTION	FLOW L/MIN	OPERATION PRESSURE BAR	PORT SIZE BSP		PRICE £
				P, A + B	T	
ZZ002056	Q95 F1S(N) - 103/RTLS - F3D	120	350	3/4"	3/4"	£340.01

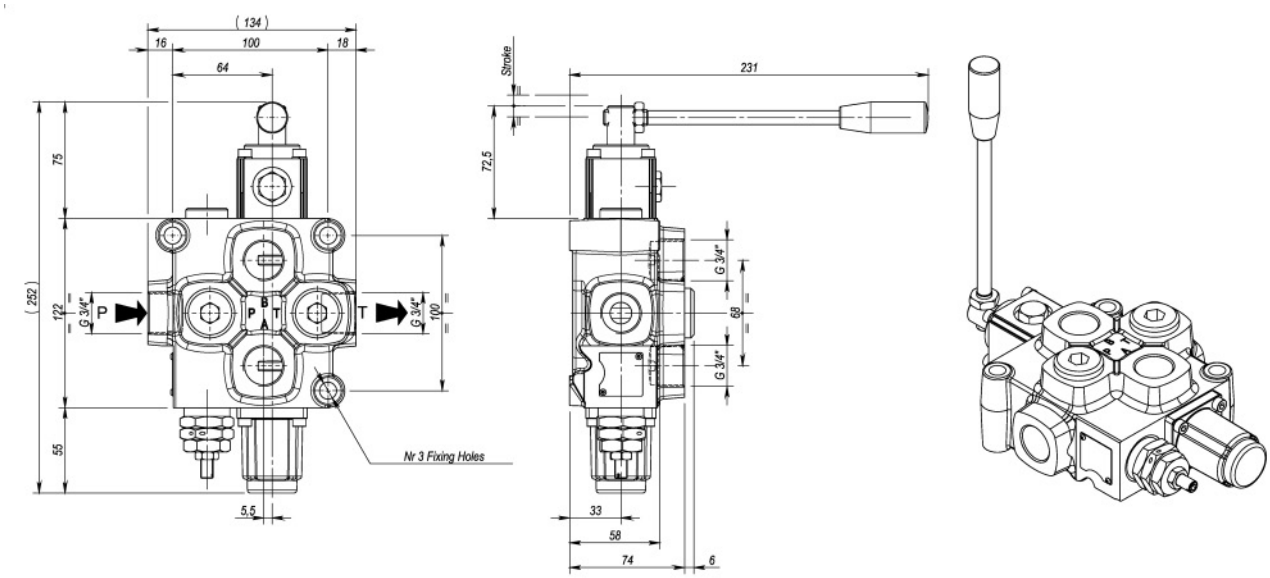

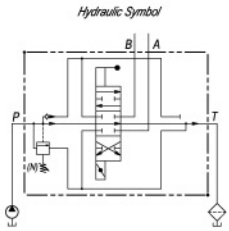

MONOBLOCK CONTROL VALVE C/W FLOW CONTROL

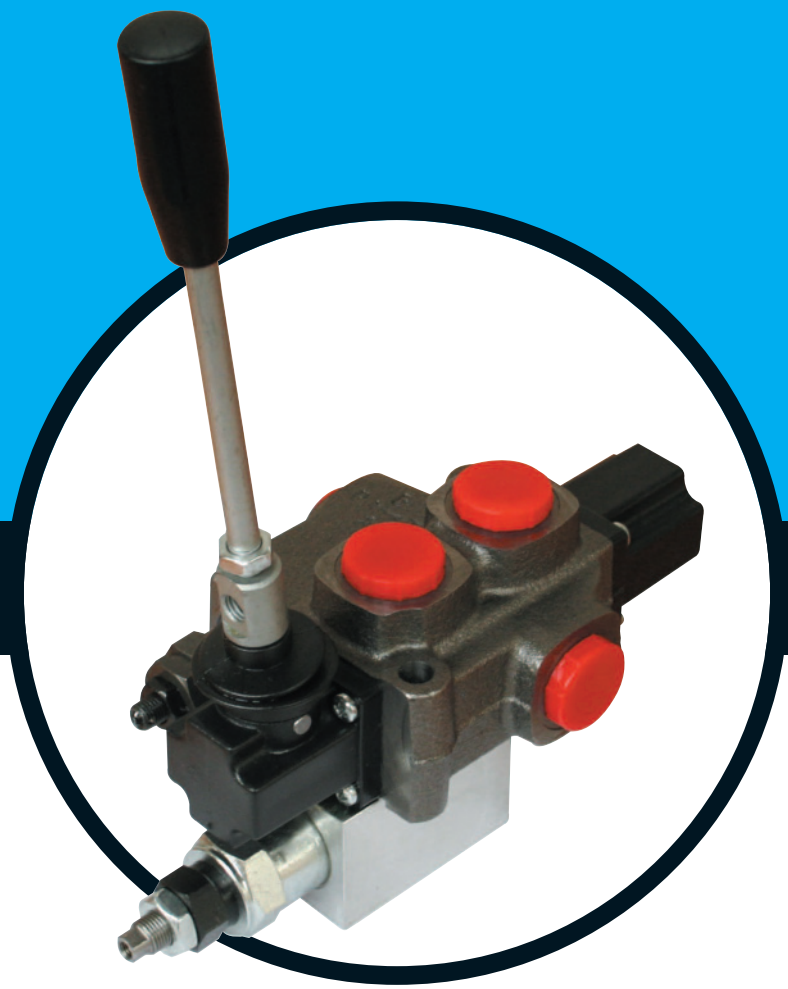

FLOWFIT

MONOBLOCK CONTROL VALVE C/W FLOW CONTROL

Ideal for control of hydraulic motors and hydraulic cylinders.

GENERAL

The valve is double acting c/w 3 position detent kit.
Valves have an integral main relief 30-280BAR/435PSI - 4060PSI.
Max operating pressure 300 BAR
Ports P, A, B and T 1/2" BSP
Max input flow 50L/Min
The pressure compensated flow control will control the speed of a hydraulic motor or hydraulic cylinder. All residual flow will return down the tank line.

MONOBLOCK VALVE

PART NO	DESCRIPTION	FLOW L/MIN	OPERATION PRESSURE BAR	PORT SIZE BSP		PRICE £
				P, A + B	T	
ZZ002059	Q35 F7S(N) - 103/A1/R3/RPA Double acting spool valves C/W 3 position detent lever control C/W pressure compensated flow control	50	300	1/2"	1/2"	Price on application OEM supply only

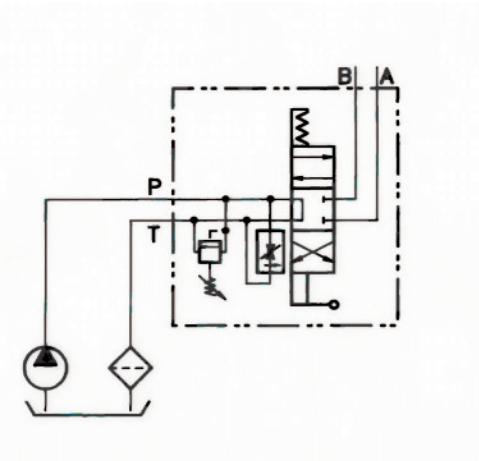

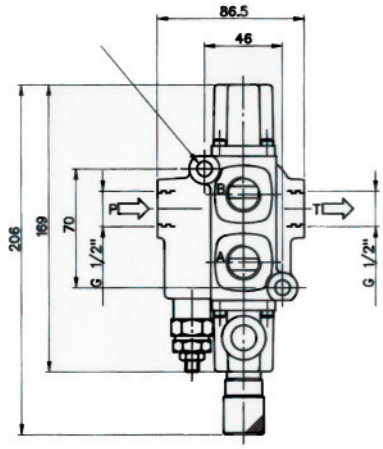

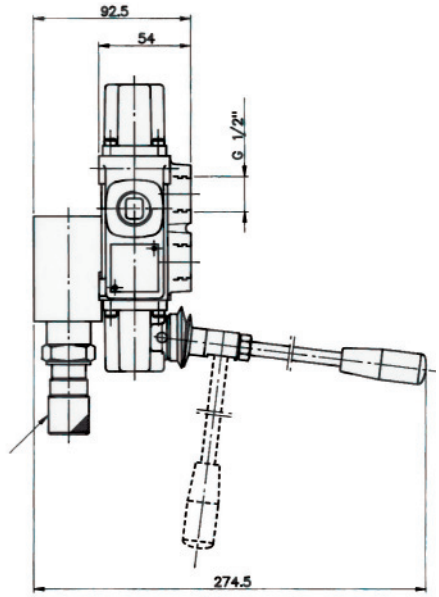

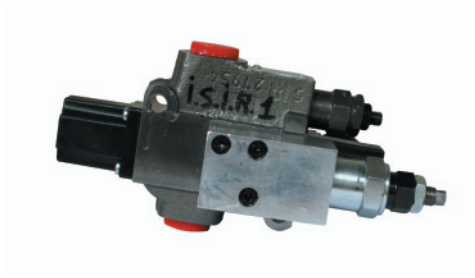

50% OFF ALL PRICES

HYDRAULIC CETOP VALVES

KOMPASS DIRECTIONAL CONTROL VALVES.....90
KOMPASS HAND OPERATED DIRECTIONAL CONTROL VALVES.....91
KOMPASS SUBPLATES FOR CETOP VALVES.....91
KOMPAS SMANIFOLDS for cetop valves.....92
KOMPASS MODULAR VALVES cetop 3, 5, 7 and 8.....96
KOMPASS RELIEF VALVES inline and subplate mounted.....99
KOMPASS PRESSURE REDUCING VALVES inline and subplate mounted 100
KOMPASS SEQUENCE, COUNTER BALANCE & UNLOADING inline and subplate mounted.....100
flowfit 2 WAY CARTRIDGE ELECTRIC VALVES.....100
ELECTRO-HYDRAULIC PROPORTIONAL VALVES.....101

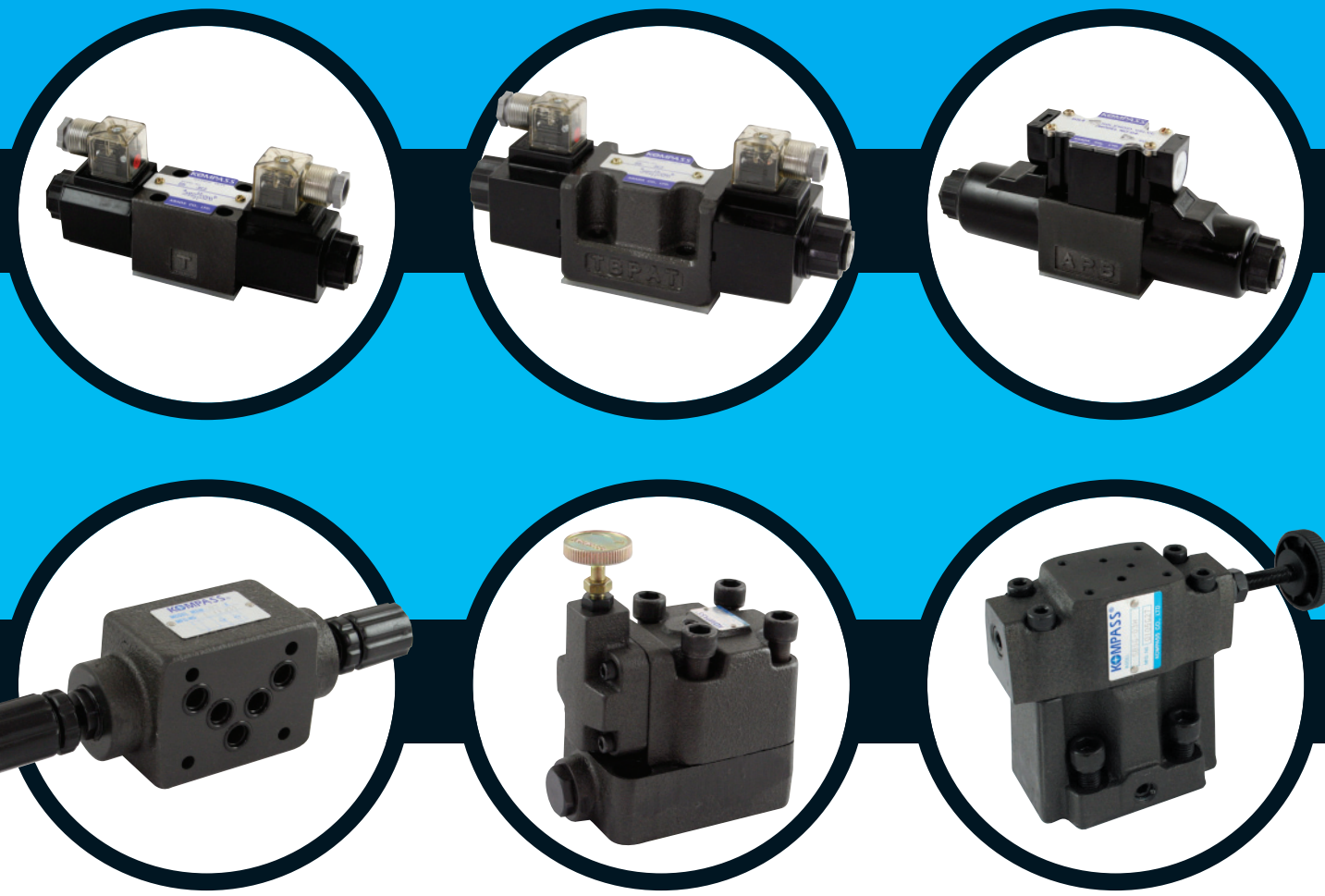

KOMPASS®

CETOP 3 • NG - 06 VALVES

MAXIMUM FLOW: 63 l/min
MAXIMUM PRESSURE: 315 Bar
The above are also available in various Voltages and Spool Configurations.
Please call for assistance
All the valves come with Din Plugs c/w LEDs and Bolt Kits

VOLTAGES AVAILABLE:
12VDC=D1, 24VDC=D2, 110V/AC 50HZ=A1, 220V/AC 50HZ=A2 • 60HZ ALSO AVAILABLE

DIN PLUG STYLE

TERMINAL BOX STYLE

CODE		PRICE
D5 - DIN PLUG STYLE		
D5-02-2B2-5-L 2 Position Valve	SINGLE	£123.89
D5-02-3C2-5-L 3 Position Valve	DOUBLE	£173.12
D5-02-3C3-5-L 3 Position Valve	DOUBLE	£173.12
D5-02-3C4-5-L 3 Position Valve	DOUBLE	£173.12
D5-02-3C60-5-L 3 Position Valve	DOUBLE	£173.12
D4 - TERMINAL BOX STYLE		
D4-02-2B2 2 Position Valve	SINGLE	£123.89
D4-02-3C2 3 Position Valve	DOUBLE	£173.12
D4-02-3C3 3 Position Valve	DOUBLE	£173.12
D4-02-3C4 3 Position Valve	DOUBLE	£173.12
D4-02-3C60 3 Position Valve	DOUBLE	£173.12
D5/D4 DETENTED 2 POSITION WITH ANY SPOOL AS LISTED BELOW		
D5-02-2D2, 2D3, 2D4, 2D40, 2D7, 2D2A, 2D3A, 2D4A, 2D40A, 2D5A, 2D60A, 2D7A, 2D9A, 2D10A, 2D11A OR 2D12A		£173.12

CETOP 5 • NG - 10 VALVES

MAXIMUM FLOW: 120 l/min
MAXIMUM PRESSURE: 315 Bar
The above are also available in various Voltages and Spool Configurations. Please call for assistance
All the valves come with Din Plugs c/w LEDs and Bolt Kits

VOLTAGES AVAILABLE:
12VDC=D1, 24VDC=D2, 110V/AC 50HZ=A1, 220V/AC 50 HZ=A2 • 60HZ ALSO AVAILABLE

CODE		PRICE
D5 - DIN PLUG STYLE		
D5-03-2B2-5-L 2 Position Valve	SINGLE	£196.79
D5-03-3C2-5-L 3 Position Valve	DOUBLE	£255.11
D5-03-3C3-5-L 3 Position Valve	DOUBLE	£255.11
D5-03-3C4-5-L 3 Position Valve	DOUBLE	£255.11
D5-03-3C60-5-L 3 Position Valve	DOUBLE	£255.11
D4 - TERMINAL BOX STYLE		
D4-03-2B2 2 Position Valve	SINGLE	£233.24
D4-03-3C2 3 Position Valve	DOUBLE	£300.66
D4-03-3C3 3 Position Valve	DOUBLE	£300.66
D4-03-3C4 3 Position Valve	DOUBLE	£300.66
D4-03-3C60 3 Position Valve	DOUBLE	£300.66
D5/D4 DETENTED 2 POSITION WITH ANY SPOOL AS LISTED BELOW		
D5-03-2D2, 2D2, 2D3, 2D4, 2D40, 2D7, 2D2A, 2D3A, 2D4A, 2D40A, 2D5A, 2D60A, 2D7A, 2D9A, 2D10A, 2D11A OR 2D12A		£255.11

CETOP 7 • NG - 16 VALVES

MAXIMUM FLOW: 300 l/min
MAXIMUM PRESSURE: 315 Bar
These valves are the bottom deck only, they must be used together with solenoid valves
Please contact us for all your requirements

CODE	PRICE
04-2B2	£337.12
04-3C2	£337.12
04-3C3	£337.12
04-3C4	£337.12
04-3C6	£337.12
2B* = 2 Position Valve, 3C* = 3 Position Valve	

CETOP 8 • NG - 25 VALVES

MAXIMUM FLOW: 500 l/min
MAXIMUM PRESSURE: 315 Bar
These valves are the bottom deck only, they must be used together with solenoid valves.
Please contact us for all your requirements

CODE	PRICE
06-2B2	£411.60
06-3C2	£411.60
06-3C3	£411.60
06-3C4	£411.60
06-3C6	£411.60
2B* = 2 Position Valve, 3C* = 3 Position Valve	

CETOP 10 • NG - 32 VALVES

MAXIMUM FLOW: 1100 l/min
MAXIMUM PRESSURE: 315 Bar
These valves are the bottom deck only, they must be used together with solenoid valves
Please contact us for all your requirements

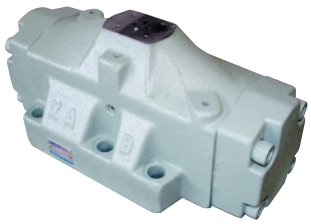

CODE	PRICE
10-2B2	£1618.15
10-3C2	£1618.15
10-3C3	£1618.15
10-3C4	£1618.15
10-3C6	£1618.15
2B* = 2 Position Valve, 3C* = 3 Position Valve	

STANDARD SPOOL CONFIGURATIONS AVAILABLE FOR ALL VALVES SPRING OFFSET 2 POSITION

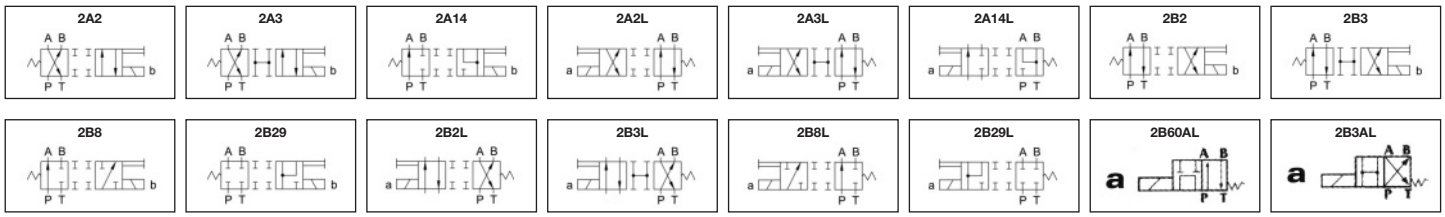

STANDARD SPOOL CONFIGURATIONS AVAILABLE FOR ALL VALVES SPRING CENTERED 3 POSITION

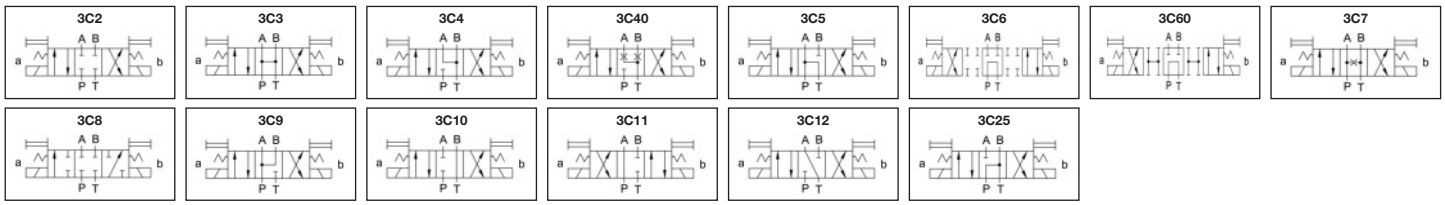

NO SPRINGS DETENTED 2 POSITION

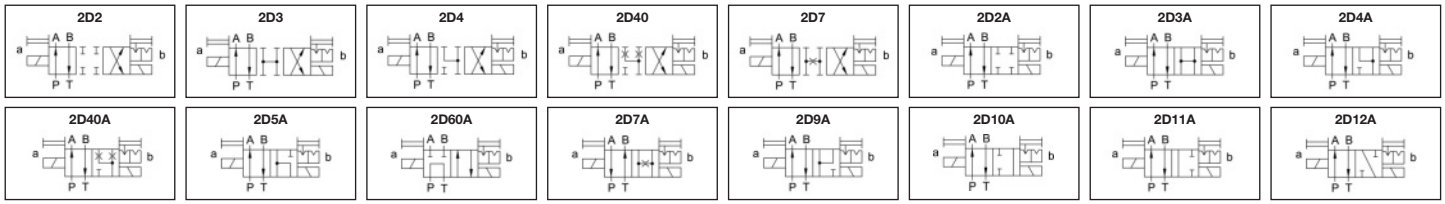

HAND OPERATED DIRECTIONAL CONTROL VALVES

KOMPASS

KOMPASS

CETOP 3

MAXIMUM FLOW: 30 l/min
MAXIMUM PRESSURE: 250 Bar

SUBPLATE	SPRING CENTRED	DETENT	PRICE
DMG-02-*	W	******	£196.79
DMG-02-*	******	O	£204.08
* = Spool Configuration SEE ABOVE			

KOMPASS

CETOP 5

MAXIMUM FLOW: 50 l/min
MAXIMUM PRESSURE: 250 Bar

SUBPLATE	SPRING CENTRED	DETENT	PRICE
DMG-03-*	W	******	£262.41
DMG-03-*	******	O	£280.62
* = Spool Configuration SEE ABOVE			

SUBPLATES FOR CETOP VALVES

KOMPASS

KOMPASS

CETOP 3

Bottom ported, side ported or 2 side 2 bottom port 3/8" BSPP Ports

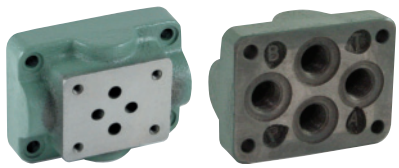

CODE	DESCRIPTION	PRICE
DSGM-02-03-S4-BSPP	CETOP 3, 3/8" BSP SIDE PORTS	£58.30
DSGM-02-03-B4-BSPP	CETOP 3, 3/8" BSP PORTS IN BOTTOM	£58.30
DSGM-02-03-2B2S-BSPP	CETOP 3, 3/8" BSP P+T BOTTOM, A+B SIDE	£58.30

KOMPASS

CETOP 5

Bottom ported or side ported 1/2" BSPP Ports

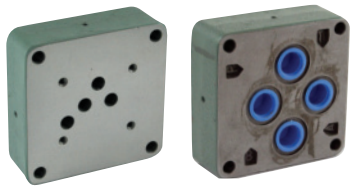

CODE	DESCRIPTION	PRICE
DSGM-03-04-S4-BSPP	CETOP 5, 1/2" BSP SIDE PORTS	£94.75
DSGM-03-04-B4-BSPP	CETOP 5, 1/2" BSP PORTS IN BOTTOM	£94.75
DSGM-03-04-2B2S-BSPP	CETOP 5, 1/2" BSP P+T BOTTOM, A+B SIDE	£94.75

KOMPASS

CETOP 7

Bottom ported or side ported 3/4" BSPP Ports

CODE	DESCRIPTION	PRICE
DSGM-04-06-B4-BSPP	CETOP 7, 3/4" BSP PORTS IN BOTTOM	£154.89
DSGM-04-06-S4-BSPP	CETOP 7, 3/4" BSP SIDE PORTS	£154.89

KOMPASS

CETOP 8

Bottom ported or side ported 3/4" BSPP Ports

CODE	DESCRIPTION	PRICE
DSGM-06-06-B4-BSPP	CETOP 8, 3/4" BSP PORTS IN BOTTOM	£229.60
DSGM-06-06-S4-BSPP	CETOP 8, 3/4" BSP SIDE PORTS	£229.60

KOMPASS

CETOP 10

Bottom ported
1 1/4" NPT Ports

CODE	DESCRIPTION	PRICE
DSGM-10-10-B4-NPT	CETOP 10, 1 1/4" NPT PORTS IN BOTTOM	£437.33

CETOP MANIFOLDS

SIDE ENTRY • CETOP 3

ORDERING CODE INFORMATION

Steel	Code No. 105161/★
Alum. Alloy	Available on request
★= Number of stations	
Material	Steel Alum. Alloy
Working Pressure	Steel 315 Bar Alum. Alloy 250 Bar
'A' and 'B' Ports	3/8" BSP
'P' and 'T' Ports	1/2" BSP
Valve Fixings	M5 x 12 Full Thread
Manifold Fixings	6.8 Dia Through C'Bore 11 Dia x 9 dp
Pitch	54.0mm

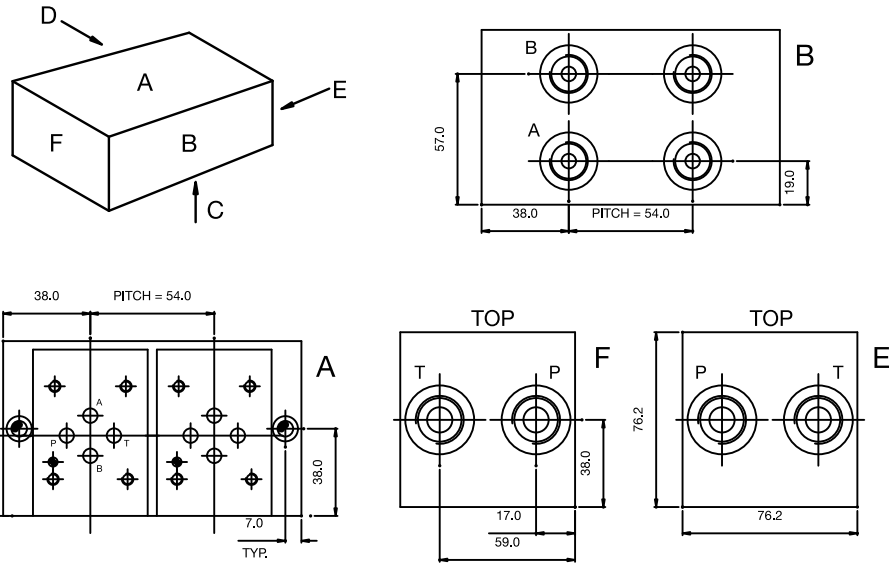

SIDE ENTRY • CETOP 3				
ORDER CODE	NUMBER OF STATIONS	OVERALL LENGTH	OVERALL WEIGHT	PRICE
105161/1	ONE	76.0	3.0 Kgs	£124.12
105161/2	TWO	130.0	5.3 Kgs	£183.37
105161/3	THREE	184.0	7.6 Kgs	£234.26
105161/4	FOUR	238.0	10.0 Kgs	£293.61
105161/5	FIVE	292.0	12.2 Kgs	£369.73
105161/6	SIX	346.0	14.5 Kgs	£446.26
105161/7	SEVEN	400.0	16.8 Kgs	£531.90
105161/8	EIGHT	454.0	19.1 Kgs	£615.61

SIDE ENTRY TEST POINT • CETOP 3

ORDERING CODE INFORMATION

Steel	Code No. 125161/★
Alum. Alloy	Available on request
★= Number of stations	
Material	Steel Alum. Alloy
Working Pressure	Steel 315 Bar Alum. Alloy 250 Bar
'A' and 'B' Ports	1/2" BSP
'P' and 'T' Ports	1/2" BSP
Test Points	1/4" BSP
Valve Fixings	M5 x 12 Full Thread
Manifold Fixings	6.8 Dia Through C'Bore 11 Dia x 9 dp
Pitch	54.0mm

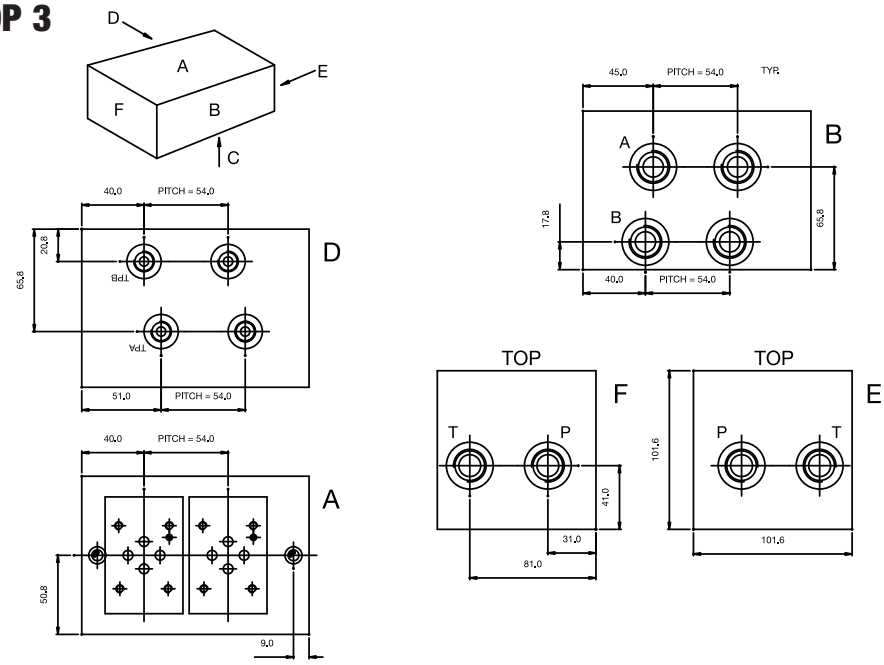

SIDE ENTRY TEST POINT • CETOP 3				
ORDER CODE	NUMBER OF STATIONS	OVERALL LENGTH	OVERALL WEIGHT	PRICE
125161/1	ONE	92.0	6.7 Kgs	£277.17
125161/2	TWO	146.0	10.7 Kgs	£418.51
125161/3	THREE	200.0	14.6 Kgs	£559.19
125161/4	FOUR	254.0	18.6 Kgs	£702.12
125161/5	FIVE	308.0	22.5 Kgs	£844.07
125161/6	SIX	362.0	26.5 Kgs	£990.08
125161/7	SEVEN	416.0	30.5 Kgs	£1137.92
125161/8	EIGHT	416.0	34.5 Kgs	£1283.56

FOR TWO PUMP "HI-LOW" UNLOADING NG6/NG10 MANIFOLDS

SEE CARTRIDGE VALVE SECTION

50% OFF ALL PRICES

SIDE ENTRY RELIEF VALVE • CETOP 3

ORDERING CODE INFORMATION

Steel	Code No. 115161/★
Alum. Alloy	Available on request

★= Number of stations

Material	Steel Alum. Alloy
Working Pressure	Steel 315 Bar Alum. Alloy 250 Bar
'A' and 'B' Ports	3/8" BSP
'P' and 'T' Ports	1/2" BSP
Valve Fixings	M5 x 12 Full Thread
Manifold Fixings	6.8 Dia Through C'Bore 11 Dia x 9 dp
Adjustable Press. Range	5 to 420 Bar
Pitch	54.0mm

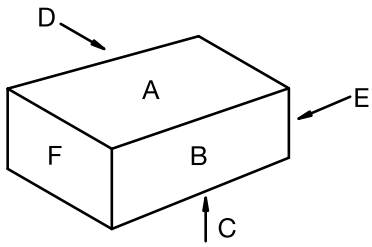

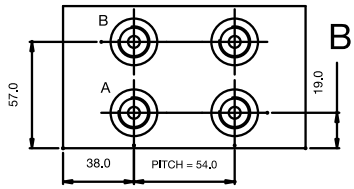

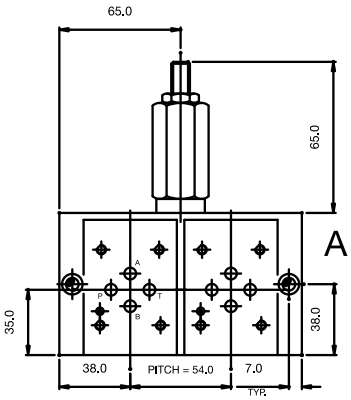

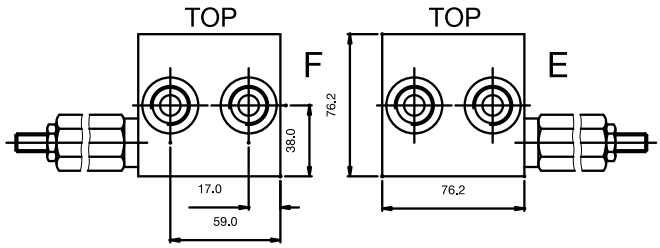

FOR TWO PUMP "HI-LOW" UNLOADING NG6/NG10 MANIFOLDS
SEE CARTRIDGE VALVE SECTION

SIDE ENTRY RELIEF VALVE • CETOP 3				
ORDER CODE	**NUMBER OF STATIONS**	**OVERALL LENGTH**	**OVERALL WEIGHT**	**PRICE**
115161/1	ONE	105.0	4.1 Kgs	£381.68
115161/2	TWO	130.0	5.3 Kgs	£410.16
115161/3	THREE	184.0	7.6 Kgs	£492.02
115161/4	FOUR	238.0	10.0 Kgs	£551.34
115161/5	FIVE	292.0	12.2 Kgs	£627.60
115161/6	SIX	346.0	14.5 Kgs	£703.78
115161/7	SEVEN	400.0	16.8 Kgs	£789.44
115161/8	EIGHT	454.0	19.1 Kgs	£872.55

SIDE ENTRY • CETOP 5

ORDERING CODE INFORMATION

Steel	Code No. 205171/★
Alum. Alloy	Available on request

★= Number of stations

Material	Steel Alum. Alloy
Working Pressure	Steel 315 Bar Alum. Alloy 250 Bar
'A' and 'B' Ports	3/4" BSP
'P' and 'T' Ports	3/4" BSP
Valve Fixings	M6 x 12 Full Thread
Manifold Fixings	8.5 Dia Through C'Bore 11 Dia x 9 dp
Pitch	80.0mm

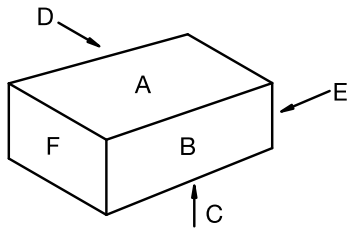

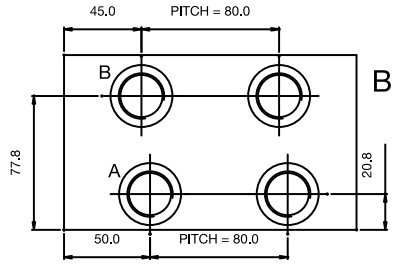

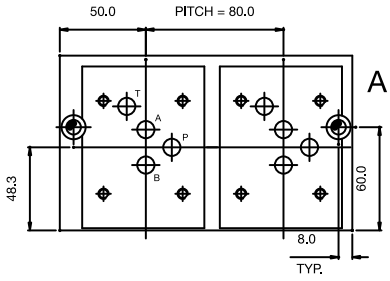

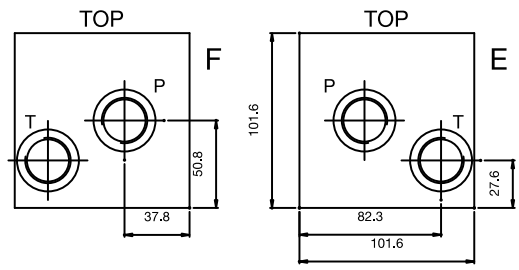

FOR TWO PUMP "HI-LOW" UNLOADING NG6/NG10 MANIFOLDS
SEE CARTRIDGE VALVE SECTION

SIDE ENTRY • CETOP 5				
ORDER CODE	**NUMBER OF STATIONS**	**OVERALL LENGTH**	**OVERALL WEIGHT**	**PRICE**
205171/1	ONE	90.0	7.0 Kgs	£213.26
205171/2	TWO	170.0	12.5 Kgs	£292.13
205171/3	THREE	250.0	18.0 Kgs	£386.62
205171/4	FOUR	330.0	24.0 Kgs	£498.55
205171/5	FIVE	410.0	30.0 Kgs	£612.84
205171/6	SIX	490.0	36.0 Kgs	£742.47

SIDE ENTRY TEST POINT • CETOP 5

ORDERING CODE INFORMATION

Steel Code No. 225171/★
Alum. Alloy Available on request
★= Number of stations

Material Steel
Alum. Alloy

Working Pressure Steel 315 Bar
Alum. Alloy 250 Bar

'A' and 'B' Ports 3/4" BSP

'P' and 'T' Ports 3/4" BSP

Test Points 1/4" BSP

Valve Fixings M6 x 12
Full Thread

Manifold Fixings 8.5 Dia Through
C'Bore 11 Dia x 9 dp

Pitch 80.0mm

FOR TWO PUMP "HI-LOW" UNLOADING NG6/NG10 MANIFOLDS
SEE CARTRIDGE VALVE SECTION

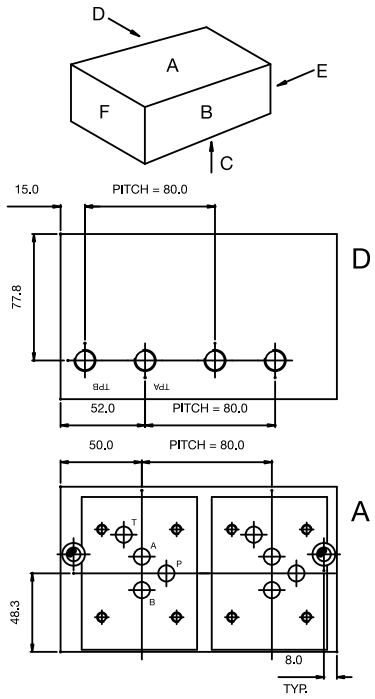

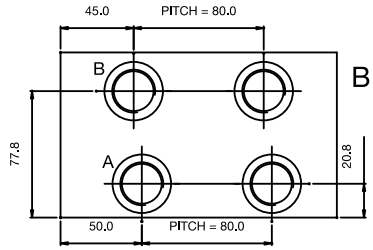

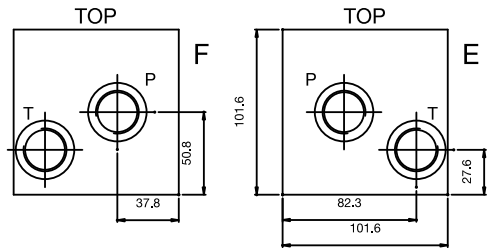

SIDE ENTRY TEST POINT • CETOP 5				
ORDER CODE	NUMBER OF STATIONS	OVERALL LENGTH	OVERALL WEIGHT	PRICE
225171/1	ONE	90.0	7.0 Kgs	£296.21
225171/2	TWO	170.0	12.5 Kgs	£457.94
225171/3	THREE	250.0	18.0 Kgs	£640.07
225171/4	FOUR	330.0	24.0 Kgs	£835.53
225171/5	FIVE	410.0	30.0 Kgs	£1031.12
225171/6	SIX	490.0	36.0 Kgs	£1247.22

SIDE ENTRY RELIEF VALVE • CETOP 5

ORDERING CODE INFORMATION

Steel Code No. 215171/★
Alum. Alloy Available on request
★= Number of stations

Material Steel
Alum. Alloy

Working Pressure Steel 315 Bar
Alum. Alloy 250 Bar

'A' and 'B' Ports 3/4" BSP

'P' and 'T' Ports 3/4" BSP

Valve Fixings M6 x 12
Full Thread

Manifold Fixings 8.5 Dia Through
C'Bore 11 Dia x 9 dp

Adjustable Press. Range 5 to 420 Bar

Pitch 80.0mm

FOR TWO PUMP "HI-LOW" UNLOADING NG6/NG10 MANIFOLDS
SEE CARTRIDGE VALVE SECTION

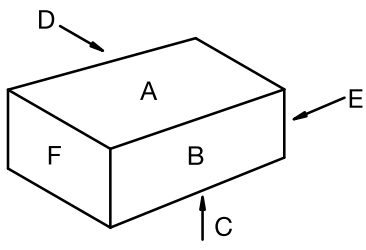

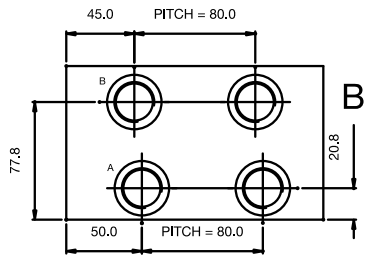

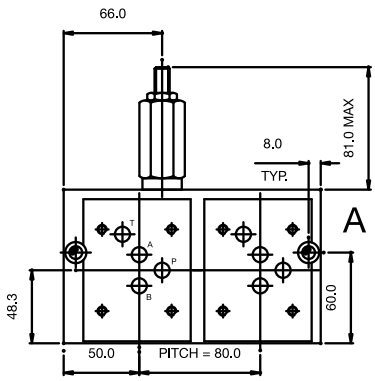

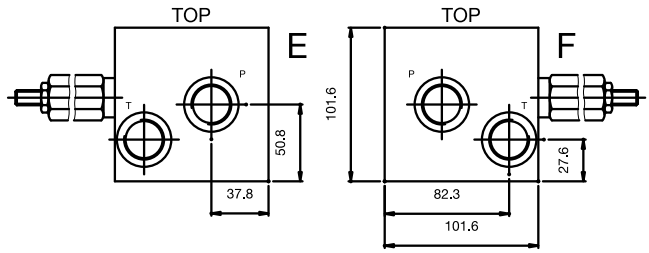

SIDE ENTRY RELIEF VALVE • CETOP 5				
ORDER CODE	NUMBER OF STATIONS	OVERALL LENGTH	OVERALL WEIGHT	PRICE
215171/1	ONE	90.0	7.0 Kgs	£575.07
215171/2	TWO	170.0	12.5 Kgs	£616.52
215171/3	THREE	250.0	18.0 Kgs	£706.51
215171/4	FOUR	330.0	24.0 Kgs	£812.74
215171/5	FIVE	410.0	30.0 Kgs	£918.96
215171/6	SIX	490.0	36.0 Kgs	£1041.12

50% OFF ALL PRICES

SIDE ENTRY • CETOP 7

ORDERING CODE INFORMATION

Steel	Code No. 705161/★
★= Number of stations	
Material	Steel
Working Pressure	Steel 315 Bar
'A' and 'B' Ports	1" BSP
'P' Port	1 1/4" BSP Through
'T' Port	1 1/2" BSP Through
'DR' Port	3/8" BSP Through
Valve Fixings	M10 x 16 Full Thread M6 x 12 Full Thread
Manifold Fixings	M12 x 20 Deep Full Thread
Pitch	100.0mm

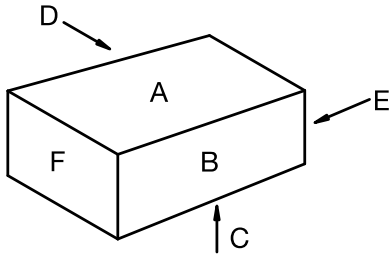

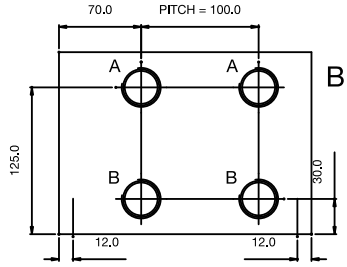

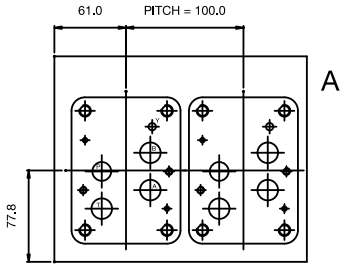

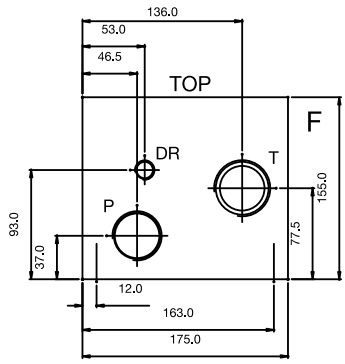

SIDE ENTRY • CETOP 7				
ORDER CODE	NUMBER OF STATIONS	OVERALL LENGTH	OVERALL WEIGHT	PRICE
705161/1	ONE	115.0	21.0 Kgs	£1066.86
705161/2	TWO	215.0	38.0 Kgs	£1760.42
705161/3	THREE	315.0	47.0 Kgs	£2610.99

SIDE ENTRY • CETOP 8

ORDERING CODE INFORMATION

Steel	Code No. 805161/★
★= Number of stations	
Material	Steel
Working Pressure	Steel 315 Bar
'A' and 'B' Ports	1 1/4" BSP
'P' Port	1 1/2" BSP Through
'T' Port	2" SAE 3000 Flange Through
'DR' Port	1/2" BSP Through
Valve Fixings	M12 x 20 Full Thread
Manifold Fixings	M12 x 20 Deep Full Thread
Pitch	125.0mm

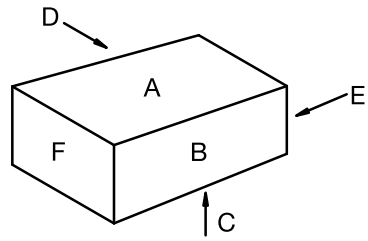

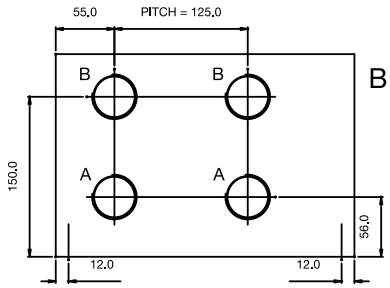

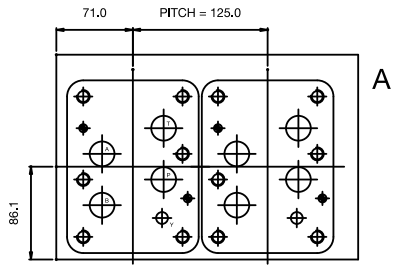

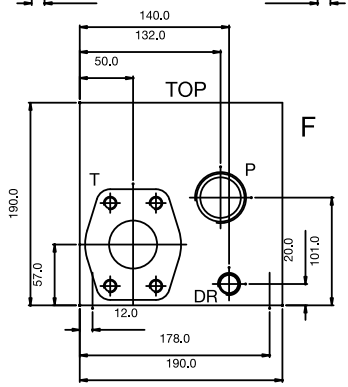

SIDE ENTRY • CETOP 8				
ORDER CODE	NUMBER OF STATIONS	OVERALL LENGTH	OVERALL WEIGHT	PRICE
805161/1	ONE	155.0	21.0 Kgs	£1499.07
805161/2	TWO	280.0	38.0 Kgs	£2534.31

CETOP ADAPTOR, BLANKING AND TAPPING PLATES

ORDER CODE	DESCRIPTION	PRICE
BP-31	CETOP 3 Blanking Plate	£78.11
BP-51	CETOP 5 Blanking Plate	£90.91
BP-71	CETOP 7 Blanking Plate	£260.28
BP-81	CETOP 8 Blanking Plate	£286.34
TP-31AB	CETOP 3 - A & B Tapping Plate	£99.64
TP-31PT	CETOP 3 - P & T Tapping Plate	£99.64
TP-51AB	CETOP 5 - A & B Tapping Plate	£121.26

ORDER CODE	DESCRIPTION	PRICE
TP-51PT	CETOP 5 - P & T Tapping Plate	£170.32
AP-531	CETOP 5 to 3 Adaptor Plate	£488.53
AP-731	CETOP 7 to 3 Adaptor Plate	£1245.70
AP-751	CETOP 7 to 5 Adaptor Plate	£847.40
AP-831	CETOP 8 to 3 Adaptor Plate	£1277.02
AP-851	CETOP 8 to 5 Adaptor Plate	£1794.47
AP-871	CETOP 8 to 7 Adaptor Plate	£2242.47

KOMPASS MODULAR VALVES MAXIMUM PRESSURE: 250 BAR

KOMPASS

CETOP 3 RELIEF VALVES

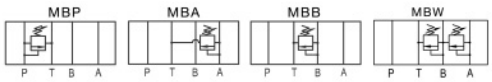

CODE KOMPASS	PRICE
MBP-02-★	£136.67
MBA-02-★	£136.67
MBB-02-★	£136.67
MBW-02-★	£185.87
Pressure Ranges B = 7 - 70 Bar, C = 35 - 140 Bar, H = 70 - 250 Bar	
Max. Flow 02 = 40 l/m • ★ = Pressure Range	

CETOP 3 PRESSURE REDUCING VALVES

CODE KOMPASS	PRICE
MRP-02-★	£136.67
MRA-02-★	£136.67
MRB-02-★	£136.67
Pressure Ranges A = 3 - 35 Bar, B = 8 - 70 Bar, C = 8 - 140 Bar, H = 10 - 250 Bar	
Max. Flow 02 = 40 l/m • ★ = Pressure Range	

CETOP 3 COUNTER BALANCE VALVE

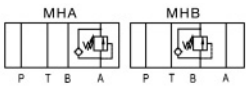

CODE KOMPASS	PRICE
MHA-02-★	£182.22
MHB-02-★	£182.22
Pressure Ranges B = 8 - 70 Bar, H = 20 - 250 Bar	
Max. Flow 02 = 40 l/m • ★ = Pressure Range	

CETOP 3 CHECK VALVES

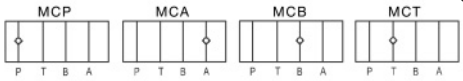

CODE KOMPASS	PRICE
MCP-02-★	£72.43
MCA-02-★	£72.43
MCB-02-★	£72.43
MCT-02-★	£72.43
Cracking Pressure A = 0.5 Bar, B = 3.5 Bar	
Max. Flow 02 = 40 l/m • ★ = Cracking Pressure	

CETOP 3 PILOT OPERATED CHECK VALVES

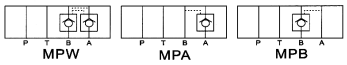

CODE KOMPASS	PRICE
MPA-02-★	£109.33
MPB-02-★	£109.33
MPW-02-★	£129.38
Cracking Pressure A = 0.5 Bar, B = 3.5 Bar	
Max. Flow 02 = 40 l/m • ★ = Cracking Pressure	

CETOP 3 FLOW CONTROL C/W CHECK VALVE

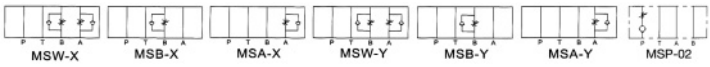

CODE KOMPASS	PRICE
MSA-02-★	£123.89
MSB-02-★	£123.89
MSW-02-★	£149.42
MSP-02-★	£116.62
Metering X = Meter Out, Y = Meter In	
Max. Flow 02 = 40 l/m • ★ = Metering In or Out	

CETOP 3 SEQUENCE VALVES

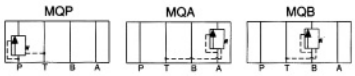

CODE KOMPASS	PRICE
MQP-02-★	£216.03
MQA-02-★	£216.03
MQB-02-★	£216.03
Pressure Ranges B = 8 - 70 Bar, C = 35 - 140 Bar, H = 105 - 250 Bar	
Max. Flow 02 = 40 l/m • ★ = Pressure Range	

CETOP 5 RELIEF VALVES

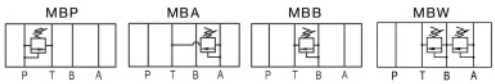

CODE KOMPASS	PRICE
MBP-03-★	£189.51
MBA-03-★	£189.51
MBB-03-★	£189.51
MBW-03-★	£200.45
Pressure Ranges B = 7 - 70 Bar, C = 35 - 140 Bar, H = 70 - 250 Bar	
Max. Flow 03 = 80 l/m • ★ = Pressure Range	

CETOP 5
PRESSURE REDUCING VALVES

CODE KOMPASS	PRICE
MRP-03-★	£171.30
MRA-03-★	£171.30
MRB-03-★	£171.30
Pressure Ranges A = 3 - 35 Bar, B = 8 - 70 Bar, C = 8 - 140 Bar, H = 10 - 250 Bar	
Max. Flow 03 = 80 l/m • ★ = Pressure Range	

CETOP 5
COUNTER BALANCE VALVE

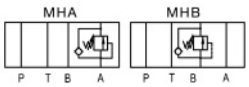

CODE KOMPASS	PRICE
MHA-03-★	£233.24
MHB-03-★	£233.24
Pressure Ranges B = 8 - 70 Bar, H = 20 - 250 Bar	
Max. Flow 03 = 80 l/m • * = Pressure Range	

CETOP 5
CHECK VALVES

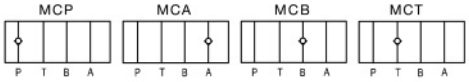

CODE KOMPASS	PRICE
MCP-03-★	£105.68
MCA-03-★	£105.68
MCB-03-★	£105.68
MCT-03-★	£105.68
Cracking Pressure A = 0.5 Bar, B = 3.5 Bar	
Max. Flow 03 = 80 l/m • * = Cracking Pressure	

CETOP 5
PILOT OPERATED CHECK VALVES

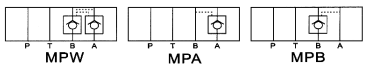

CODE KOMPASS	PRICE
MPA-03-★	£123.89
MPB-03-★	£123.89
MPW-03-★	£123.89
Cracking Pressure A = 0.5 Bar, B = 3.5 Bar	
Max. Flow 03 = 80 l/m • * = Cracking Pressure	

CETOP 5
FLOW CONTROL C/W CHECK VALVE

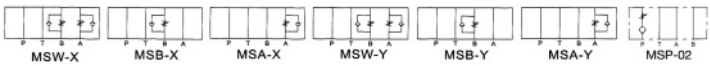

CODE KOMPASS	PRICE
MSA-03-★Max Flow 80 L/Min	£136.67
MSB-03-★Max Flow 80 L/Min	£136.67
MSW-03-★ Max Flow 80 L/Min	£189.51
MSP-03-★Max Flow 80 L/Min	£176.76
Metering X = Meter Out, Y = Meter In	
Max. Flow 03 = 80 l/m • ★ = Metering In or Out	

CETOP 5
SEQUENCE VALVES

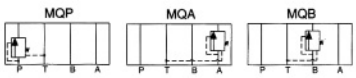

CODE KOMPASS	PRICE
MQP-03-★	£306.13
MQA-03-★	£306.13
MQB-03-★	£306.13
Pressure Ranges B = 8 - 70 Bar, C = 35 - 140 Bar, H = 105 - 250 Bar	
Max. Flow 03 = 80 l/m • ★ = Pressure Range	

CETOP 7
RELIEF VALVES

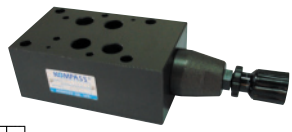

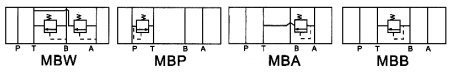

CODE KOMPASS	PRICE
MBW-04-★	£506.58
MBP-04-★	£506.58
MBA-04-★	£506.58
MBB-04-★	£506.58
Pressure Ranges B = 7 - 70 Bar, C = 35 - 140 Bar, H = 70 - 250 Bar	
Max. Flow 06 = 200 l/m • ★ = Pressure Range	

CETOP 7
PRESSURE REDUCING VALVES

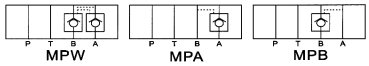

CODE KOMPASS	PRICE
MRP-04-★	£506.58
MRA-04-★	£506.58
MRB-04-★	£506.58
Pressure Ranges A = 3 - 35 Bar, B = 8 - 70 Bar, C = 8 - 140 Bar, H = 70 - 250 Bar	
Max. Flow 06 = 200 l/m • ★ = Pressure Range	

CODE KOMPASS	MAX OPERATING PRESSURE	PRICE
MCP-04-★	250 BAR	£380.85
Cracking Pressure A = 0.5 Bar, B = 3.5 Bar		
Max. Flow 04 = 200 l/m • ★ = Cracking Pressure		

CETOP 7
PILOT OPERATED CHECK VALVES

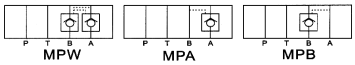

CODE	MAX OPERATING PRESSURE	PRICE
MPA-04-★	250 BAR	£455.55
MPB-04-★	250 BAR	£455.55
MPW-04-★	250 BAR	£543.03
Cracking Pressure A = 0.5 Bar, B = 3.5 Bar		
Max. Flow 04 = 200 l/m • ★ = Cracking Pressure		

CETOP 7
COUNTER BALANCE VALVE

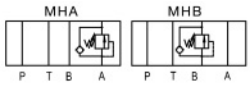

CODE	MAX OPERATING PRESSURE	PRICE
MHA-04-★		£592.22
MHB-04-★		£592.22
Pressure Range B = 8-70 Bar, C = 20-250 Bar		
Max. Flow 04 = 200 l/m • ★ = Cracking Pressure		

CETOP 7
FLOW CONTROL C/W CHECK VALVE

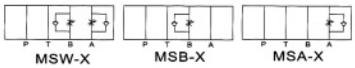

CODE	MAX OPERATING PRESSURE	PRICE
MSA-04-★	250 BAR	£501.12
MSB-04-★	250 BAR	£501.12
MSW-04-★	250 BAR	£543.03
Metering X = Meter Out, Y = Meter In		
Max. Flow 04 = 200 l/m • ★ = Metering In or Out		

CETOP 8
RELIEF VALVES

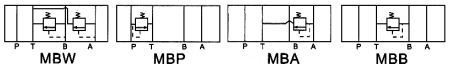

CODE KOMPASS	PRICE
MBP-06-★	£634.13
MBA-06-★	£634.13
MBB-06-★	£634.13
MBW-06-★	£634.13
Pressure Ranges B = 7 - 70 Bar, C = 35 - 140 Bar, H = 70 - 250 Bar	
Max. Flow 08 = 200 l/m • ★ = Pressure Range	

CETOP 8
PRESSURE REDUCING VALVES

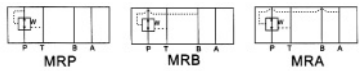

CODE KOMPASS	PRICE
MRP-06-★	£634.13
MRA-06-★	£634.13
MRB-06-★	£634.13
Pressure Ranges A = 3 - 35 Bar, B = 8 - 70, C = 8 - 140 Bar, H = 70 - 250 Bar	
Max. Flow 08 = 200 l/m • ★ = Pressure Range	

CETOP 8
FLOW CONTROL C/W CHECK VALVE

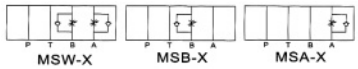

CODE KOMPASS	PRICE
MSA-06-★	£508.31
MSB-06-★	£508.31
MSW-06-★	£609.99
Metering X = Meter Out, Y = Meter In	
Max. Flow 06 = 200 l/m • ★ = Metering In or Out	

CETOP 8
PILOT OPERATED CHECK VALVES

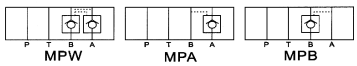

CODE	PRICE
MPA-06-★	£711.64
MPB-06-★	£711.64
MPW-06-★	£609.98
Cracking Pressure A = 0.5 Bar, B = 3.5 Bar, C = 4.6 Bar	
Max. Flow 06 = 200 l/m • ★ = Cracking Pressure	

CETOP 8
CHECK VALVES

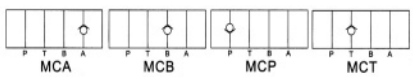

CODE	PRICE
MCP-06-★	£392.76
MCA-06-★	£392.76
MCB-06-★	£392.83
MCT-06-★	£392.76
Cracking Pressure A = 0.5 Bar, B = 3.5 Bar, C = 4.6 Bar	
Max. Flow 06 = 200 l/m • ★ = Cracking Pressure	

CETOP 8
COUNTER BALANCE VALVE

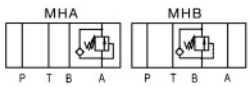

CODE	MAX OPERATING PRESSURE	PRICE
MHA-06-★	250 BAR	£765.34
MHB-06-★	250 BAR	£765.34
Pressure Range B = 8-70 Bar, C = 20-250 Bar		
Max. Flow 06 = 200 l/m • ★ = Cracking Pressure		

50% OFF ALL PRICES

DIRECT OPERATED RELIEF VALVE

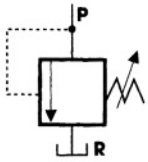

DG-02 & DT-02 are direct operating relief valves.
DG-01 & DT-01 are remote control type.

SUBPLATE MOUNTED	MAX FLOW L/MIN	MAX PRESSURE BAR	PRICE
DG-01-★	2	250	£63.78
DG-02-★	16	250	£105.68
THREADED PORTS IN LINE	**MAX FLOW L/MIN**	**MAX PRESSURE BAR**	**PRICE**
DT-01-★	2	250	£60.74
DT-02-★	16	250	£100.66
Pressure Ranges B = 10 - 70 Bar, C = 35 - 140 Bar, H = 70 - 250 Bar			
Max. Flow 01 = 2 l/m, 02 = 16 l/m • ★ = Pressure Range			
G = Subplate Mtd. **T** = Threaded Ports			

PILOT OPERATED RELIEF VALVE

This valve is able to pre-select max pressure of pump & control valves to prevent damage or overload.

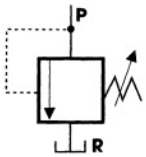

BG/BT Pilot Operated Relief Valve
BHG/BHT Pilot Operated Relief Valve – Reinforced type
SBG Pilot Operated Relief Valve – Low noise, smooth, stable operation

SUBPLATE MOUNTED	MAX FLOW L/MIN	MAX PRESSURE BAR	PRICE
BG-03-★	100	250	£171.30
BG-06-★	200	250	£189.51
BG-10-★	400	250	£360.79
BHG-06-★	200	250	£189.51
BHG-10-★	400	250	£433.70
SBG-03-★	100	250	£215.01
SBG-06-★	200	250	£240.52
SBG-10-★	400	250	£652.36
Subplate Sizes 03 = Cetop 6R, 06 = Cetop 8R, 10 = Cetop 10R			

THREADED PORTS IN LINE	PORTS	MAX FLOW L/MIN	MAX PRESSURE BAR	PRICE
BT-03-★	3/8"	100	250	£127.55
BT-06-★	3/4"	200	250	£164.00
BT-10-★	1 1/4"	400	250	£342.58
BHT-03-★	3/8"	100	250	£127.55
BHT-06-★	3/4"	200	250	£178.58
BHT-10-★	1 1/4"	400	250	£342.58
Pressure Ranges B = 10 - 70 Bar, C = 35 - 140 Bar, H = 70 - 250 Bar				
Max. Flow 03 = 100 l/m, 06 = 200 l/m, 10 = 400 l/m • ★ = Pressure Range				

SOLENOID CONTROLED RELIEF VALVE

These valves incorporate combinations with solenoid directional control valves.

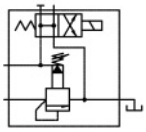

BS★ Solenoid Control Pilot Operated Relief Valve
SBSG Solenoid Control Pilot Operated Relief Valve – Low noise, smooth, stable operation

SUBPLATE MOUNTED	MAX FLOW L/MIN	PRICE
BSG-03-★	100	£342.58
BSG-06-★	200	£360.69
BSG-10-★	400	£579.46
SBSG-03-★	100	£515.70
SBSG-06-★	200	£533.91
Subplate Sizes 03 = Cetop 6R, 06 = Cetop 8R, 10 = Cetop 10R		

THREADED PORTS IN LINE	PORTS	MAX FLOW L/MIN	PRICE
BST-03-★	3/8"	100	£280.62
BST-06-★	3/4"	200	£298.85
BST-10-★	1 1/4"	400	£462.84
Pressure Ranges B = 10 - 70 Bar, C = 35 - 140 Bar, H = 70 - 250 Bar			
Max. Flow 03 = 100 l/m, 06 = 200 l/m, 10 = 400 l/m • ★ = Pressure Range			

BS	G	6	H	2B2	A2	5	D5	2P
SERIES NBR	TYPE OF CONNECTION	VALVE SIZE	PRESS. RANGE BAR	TYPE OF FUNCTION	SOLENOID TYPE	HERTZ	TERMINAL	CONTROLS
BS, BS	G=SUBPLATE	3	B = 1 0- 7 0	For Venting Conditions See Below	A1=AC110V	5=50hz	D4=JIS	NONE=SINGLE PRESSURE
BHS, BHS	T=THREADED	6	C = 35 - 140		A2=AC220V	6=60hz	D5=DIN	2P=DUO PRESSURE
SBS		10	H = 70 - 250		D1=DC12V			3P=TRI PRESSURE
					D2=DC24V			

KOMPASS RELIEF VALVES

UNLOADING RELIEF VALVE

Use for accumulator or hi-lo pressure pump systems.

SUBPLATE MOUNTED	MAX FLOW L/MIN	MAX PRESSURE BAR	PRICE
BUCG-06-★	125	250	£607.41
Pressure Ranges B = 10 - 70 Bar, C = 35 - 140 Bar, H = 70 - 250 Bar			
Max. Flow 125 l/m • ★ = Pressure Range			

KOMPASS RELIEF VALVES CONTINUED

KOMPASS

UNLOADING RELIEF VALVE

Use for accumulator or hi-lo pressure pump systems.

SUBPLATE MOUNTED	MAX FLOW L/MIN	MAX PRESSURE BAR	PRICE
BUCG-06-★	125	250	£656.00
Pressure Ranges B = 10 - 70 Bar, C = 35 - 140 Bar, H = 70 - 250 Bar			
Max. Flow 125 l/m • ★ = Pressure Range			

KOMPASS PRESSURE REDUCING VALVES

KOMPASS

PRESSURE REDUCING VALVE

Pressure which is lower than main system can be obtained by setting reducing valve.

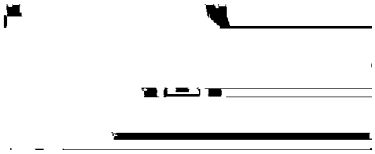

R
REDUCING VALVE

RC
REDUCING VALVE WITH CHECK VALVE

SUBPLATE MOUNTED	MAX FLOW L/MIN	MAX PRESSURE BAR	PRICE
RG-03-★	50	250	£218.67
RCG-03-★	50	250	£273.34
RG-06-★	125	250	£273.34
RCG-06-★	125	250	£397.25
RG-10-★	250	250	£561.25
RCG-10-★	250	250	£725.25
Subplate Sizes 03 = Cetop 6P, 06 = Cetop 8P, 10 = Cetop 10P			

THREADED PORTS IN LINE	PORTS	MAX FLOW L/MIN	MAX PRESSURE BAR	PRICE
RT-03-★	3/8"	50	250	£231.79
RCT-03-★	3/8"	50	250	£289.74
RT-06-★	3/4"	125	250	£289.74
RCT-06-★	3/4"	125	250	£421.09
RT-10-★	1 1/4"	250	250	£594.93
RCT-10-★	1 1/4"	250	250	£768.77
Pressure Ranges B = 5 - 70 Bar, C = 35 - 140 Bar, H = 70 - 250 Bar				
Max. Flow 03 = 50 l/m, 06 = 125 l/m, 10 = 250 l/m • ★ = Presure Range				
RG/T = Reducing, **RCG/T** = Reducing c/w Integral Check Valve				

SEQUENCE, COUNTER BALANCE & UNLOADING

KOMPASS

SEQUENCE, COUNTER BALANCE & UNLOADING

These valves are direct operated pressure control & contain pilot pressure ports which can be operated by internal or external pilots.

Buy 1 valve – covers any one of Sequence, Counter Balance, and Unloading Valve all in one. Ask for details how to convert.

SUBPLATE MOUNTED	MAX FLOW L/MIN	MAX PRESSURE BAR	PRICE
HG-03-★	50	250	£215.02
HG-06-★	125	250	£244.17
HG-10-★	250	250	£327.41
HCG-03-★	50	250	£215.02
HCG-06-★	125	250	£317.07
HCG-10-★	250	250	£488.36
Subplate Sizes 03 = ISO 5781-AG-06-2-A, 06 = ISO 5781-AG-08-2-A, 10 = ISO 5781-AJ-10-2-A			

THREADED PORTS IN LINE	MAX FLOW L/MIN	MAX PRESSURE BAR	PRICE
HT-03-★	50	250	£200.45
HT-06-★	125	250	£207.74
HT-10-★	250	250	£353.51
HCT-03-★	50	250	£215.02
HCT-06-★	125	250	£273.34
HCT-10-★	250	250	£433.70
Pressure Ranges A = 18 - 35 Bar, B = 35 - 70 Bar, C = 70 - 140 Bar, H = 70 - 250 Bar			
Max. Flow 03 = 50 l/m, 06 = 125 l/m, 10 = 250 l/m • ★ = Presure Range			
C = Added to Designate Integral Check			

2 WAY CARTRIDGE ELECTRIC VALVES

2 WAY, 2 POSITION PILOT OPERATED SOLENOID VALVES POPPET TYPE

Max Pressure 210 Bar • Max Flow 22 L/min • Protection IP65 • Feeding Tolerance +/-10% • Energising Time ED 100% • Insulation Class H • Absorbed Power in A.C. 20VA • Absorbed Power at pickup 28 VA • Absorbed Power in DC 18W • Weight 0.25kg • Steel Body Nickel Plated

EV★★

- EVC6
- EVE6
- EVA6

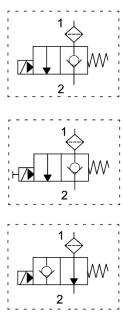

★★★

140	BSP 1/4"
380	BSP 3/8"

★★★★★

012DC	12VDC
024DC	24VDC
02450	24V/50HZ
11050	110V/50HZ
22050	220V/50HZ
024RAC	24RAC
110RAC	110RAC
220RAC	220RAC

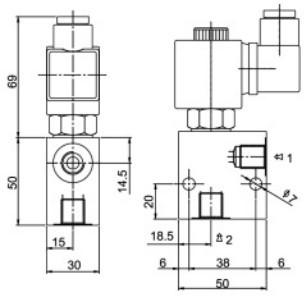

ORDER CODE	LIST PRICE
EVC6-★★★-★★★★★	£142.12
EVE6-★★★-★★★★★	£143.95
EVA6-★★★-★★★★★	£149.42

50% OFF ALL PRICES

KOMPASS

ELECTRO-HYDRAULIC PROPORTIONAL PILOT RELIEF VALVE

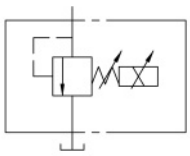

MODEL	FLOW L/M	PRESSURE ADJ RANGE (BAR)	RATED CURRENT MA	COIL RESISTANCE	HYSTERESIS	REPEATABILITY
EDG-01	0.3 - 2	B = 5 - 70	800	10	3%	1%
		C = 10 - 160	900			
		H = 12 - 250	950			

SERIES NBR	VALVE SIZE	PRESSURE ADJ. RANGE	CONTROL
EDG	O1	B = 5 - 70	* = Normal
		C = 10 - 160	V = Unloading
		H = 12 - 250	Control Type

CODE	PRICE
EDG-01-*	£473.78

KOMPASS

ELECTRO-HYDRAULIC PROPORTIONAL RELIEF VALVE

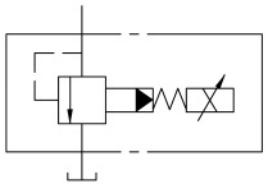

MODEL	FLOW L/M	PRESSURE ADJ RANGE (BAR)	RATED CURRENT MA	COIL RESISTANCE	HYSTERESIS	REPEATABILITY
EBG-03	3 - 100	C =5 - 160	C:770/H:820	10	2%	1%
EBG-06	3 - 200		C:750/H:800			
EBG-10	3 - 400	H = 10 - 250	C:730/H:780			

SERIES NBR	VALVE SIZE	PRESSURE ADJ. RANGE	SAFETY VALVE
EBG	O3	C =5 - 160	* = With
	O6		T = Without
	10	H = 10 - 250	

CODE	PRICE
EBG-03	£725.25
EBG-06	£668.51
EBG-10	£1093.34

KOMPASS

ELECTRO-HYDRAULIC PROPORTIONAL RELIEF & FLOW CONTROL VALVE

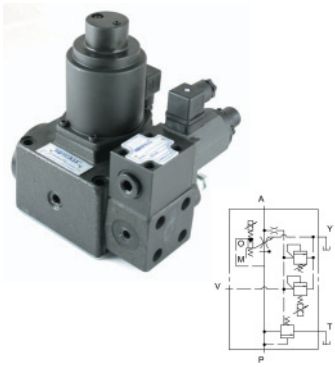

MODEL	DESCRIPTION	EFBG-03-125	EFBG-06-250	EFBG-10-500
Flow Control	Metered Flow Adj. Range	1 - 125	2.5 - 250	5 - 500
	Rated Current (mA)	680	580	700
	Coil Resistance (Ohms)	43.5	43.5	43.5
	Differencial Pressure	6	7	9
	Hysteresis	<7%	<7%	<7%
	Repeatability	1%	1%	1%
Pressure Control	Pressure Adj. Range	C = 14 - 140	C = 15 - 140	C = 16 - 140
	Bar	H = 14 - 210	H = 15 - 210	H = 16 - 210
	Rated Current (mA)	C = 710	C = 690	C = 690
		H = 770	H = 730	H = 690
	Coil Resistance (Ohms)	10	10	10
	Hysteresis	>3%	>3%	>3%
	Repeatability	1%	1%	1%

SERIES NBR.	VALVE SIZE	MAX. ADJ. FLOW	PILOT RELIEF PRESS. ADJ. RANGE
EFBG	O3	125 -125l/min.	C =14 - 140 Bar
	O6	250 =250l/min.	
	10	500 = 500l/min.	H = 14 - 210 Bar

CODE	PRICE
EFBG-03	£1561.93
EFBG-06	£2175.79
EFBG-10	£5235.36

KOMPASS

POWER AMPLIFIERS FOR PROPORTIONAL VALVES

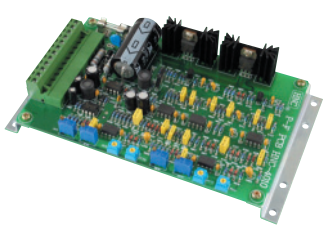

MODEL	FUNCTION	MAX OUTPUT	MAX INPUT	APPLICATION
HNC-1085	DC Input	1A (10 Ohms)	DC+10V	EDG-01
				EBG-03
				EBG-06

MODEL	SUPPLY VOLTAGE/ FUSE	LOAD COIL RESIS. FLOW	LOAD COIL RESIS. PRESSURE	INPUT CONTROL VOLTAGE	MAX CURRENT OUTPUT RANGE (FLOW)	MAX CURRENT OUTPUT RANGE (PRESSURE)
HNC-4010	DC Input	J3,J4 - 40 Ohms 20 Deg C	J5,J6 - 10 Ohms 20 Deg C	0V - +10V	FCT2 -0mA	PCT2-0mA
					FCT2-750mA	PCT1 - 850mA

CODE	PRICE
HNC-1085	£302.46

HYDRAULIC CARTRIDGE VALVES

DOUBLE PILOT OPERATED CHECK VALVES.....103
SINGLE PILOT OPERATED CHECK VALVES.....105
OVERCENTRE VALVES.....107
RELIEF VALVES.....109
DUAL CROSS RELIEF VALVES.....112
CHECK VALVES.....115
HOSE BURST VALVES.....115
FLOW CONTROL VALVES.....116
2 WAY FLOW DIVIDERS.....119
SEQUENCE VALVES.....120
TWO PUMP "HI-LOW" UNLOADING VALVES.....121
HIGH PRESSURE BALL VALVES.....122
DIVERTER VALVES.....123
END STROKE VALVES.....125
ROTATING COUPLINGS.....126
PLOUGH OVERTURNING VALVES.....127

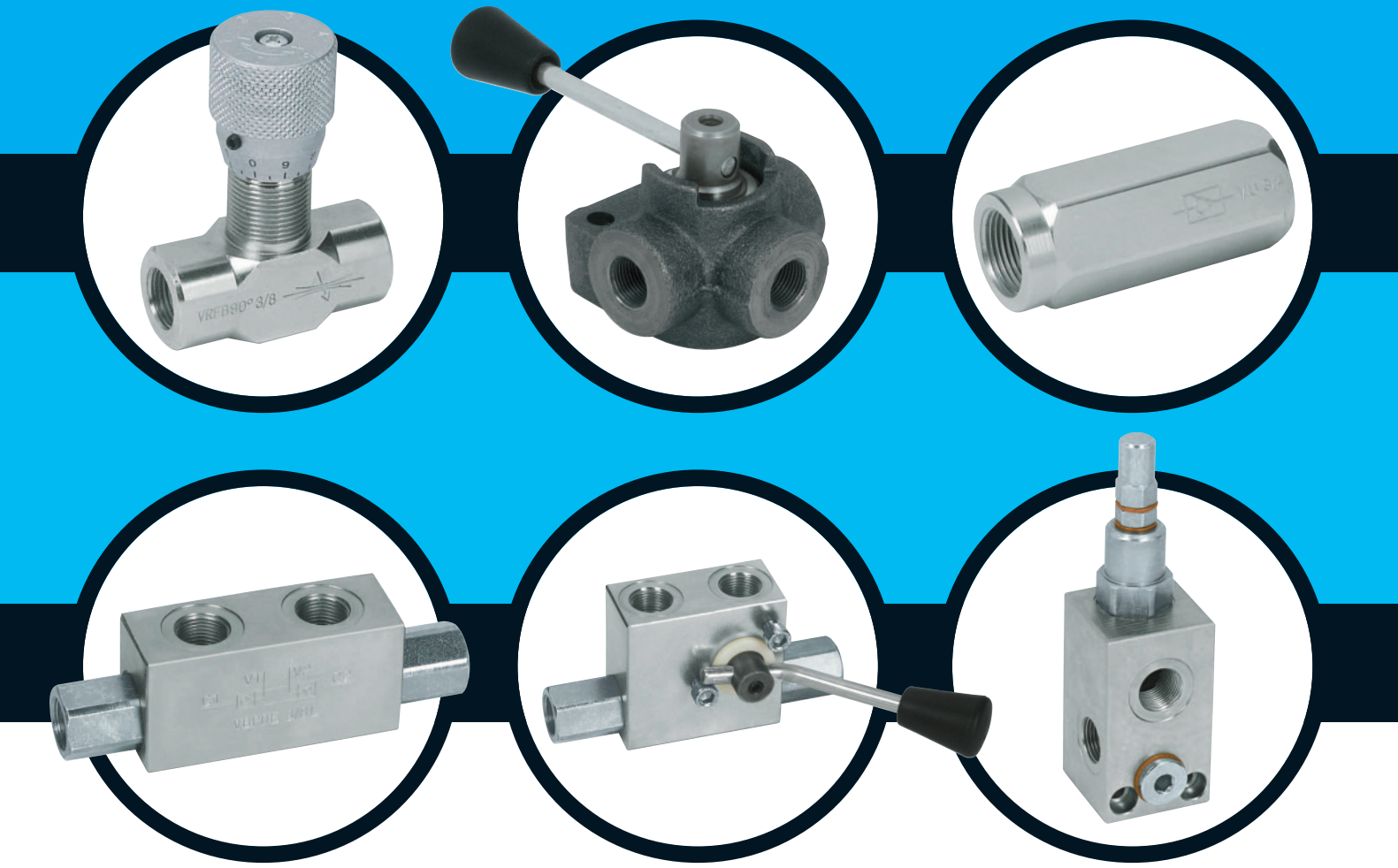

FLOWFIT

50% OFF ALL PRICES

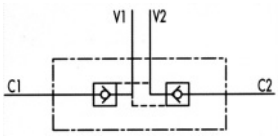

DOUBLE PILOT OPERATED CHECK VALVES

USE AND OPERATION

Pilot check valves are used to block the cylinder in both directions.
Flow is free in one direction and blocked in the reverse direction until pilot pressure is applied.
Body: zinc-plated steel, **Internal parts**: Hardened and ground steel, **Seals**: Buna N standard, **Poppet type:** No leakage
Applications: connect v1 and v2 to pressure flow and c1 and c2 to the actuator.
ON REQUEST: WITHOUT SEAL ON PILOT PISTON, 1 BAR SPRING, 8 BAR SPRING

CODE	TYPE	PORTS BSP	PILOT RATIO	MAX FLOW L/MIN	MAX PRESSURE BAR	CRACKING PRESSURE BAR	PRICE
V0010	VBPDE 1/4 L	1/4"	1:5,5	20	350	4	£30.98
V0020	VBPDE 3/8" L	3/8"	1:5,5	35	350	3	£37.16
V0030	VBPDE 1/2" L	1/2"	1:5	50	350	3	£44.48
V0050	VBPDE 3/8"	3/8"	1:5	45	350	3.5	£53.08
V0060	VBPDE 18	1/8"	1:5	45	350	3.5	£58.42
V0070	VBPDE 1/2"	1/2"	1:4	70	350	3.5	£56.65
V0040	VBPDE 3/4"	3/4"	1:4	100	300	2	£76.11

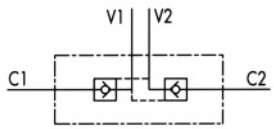

DOUBLE PILOT OPERATED CHECK VALVES FOR 12MM PIPE MOUNTING (DIN 2353)

USE AND OPERATION

Pilot check valves are used to block the actuator in both directions. Flow is free in one direction and blocked in the reverse direction until pilot pressure is applied. They are easily assembled on a cylinder. We supply on request fittings kit for mounting on cylinder with a specific centre distance.
Body: zinc-plated steel, **Internal parts**: Hardened and ground steel, **Seals**: Buna N standard, **Poppet type:** No leakage
Applications: connect v1 and v2 to pressure flow and c1 and c2 to the actuator with the pipe.
ON REQUEST: WITH OUT SEAL ON PILOT PISTON, 1 BAR SPRING, 8 BAR SPRING

CODE	TYPE	PILOT RATIO	MAX FLOW L/MIN	MAX PRESSURE BAR	CRACKING PRESSURE BAR	PRICE
V0090	VBPDE 1/4" L 2 CEXC 12L	1:5,5	20	350	4	£43.36
V0110	VBPDE 3/8" L 2 CEXC 12L	1:5,5	30	350	4	£43.36
V0091	VBPDE 1/4" L 2 CEXC-10L	XZ1:5,5	20	350	5.5	£46.94

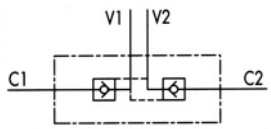

CODE	TYPE	PILOT RATIO	MAX FLOW L/MIN	MAX PRESSURE BAR	CRACKING PRESSURE BAR	PRICE
V0130	VBPDE 3/8" L 2 CC 12L	1:5,5	35	350	3	£46.92
V0135	VBPDE 1/2" L 2 CC 15L	1:5	50	350	3	£58.42

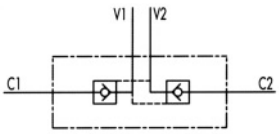

DOUBLE PILOT OPERATED CHECK VALVE WITH ADJUSTABLE BANJO UNION

USE AND OPERATION

Pilot check valves are used to block the cylinder in both directions. Flow is free in one direction and blocked in the reverse direction until pilot pressure is applied. This valve is ideal for very short distance centre cylinders. The check cartridge serves also as fixing banjo, allowing after nut releasing a 90° regulation
Body: zinc-plated steel, **Internal parts**: Hardened and ground steel, **Seals**: Buna N standard, **Poppet type:** No leakage
Applications: connect v1 and v2 to pressure flow, connect c1 directly to the cylinder through the 3/8" screw and c2 to the cylinder through the banjo.
ON REQUEST: WITH OUT SEAL ON PILOT PISTON, 1 BAR SPRING, 8 BAR SPRING

CODE	TYPE	PILOT RATIO	MAX FLOW L/MIN	MAX PRESSURE BAR	CRACKING PRESSURE BAR	PRICE
V0112	VBPDE 3/8" L SC 12L	1:5,5	30	350	4	£60.20

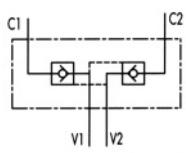

DOUBLE PILOT OPERATED CHECK VALVES - TYPE A

USE AND OPERATION

Pilot check valves are used to block the cylinder in both directions. Flow is free in one direction and blocked in the reverse direction until pilot pressure is applied.
Body: zinc-plated steel, **Internal parts**: Hardened and ground steel, **Seals**: Buna N standard, **Poppet type:** No leakage
Applications: connect v1 and v2 to pressure flow and c1 and c2 to the actuator
ON REQUEST: WITH OUT SEAL ON PILOT PISTON, 1 BAR SPRING, 8 BAR SPRING

CODE	TYPE	PILOT RATIO	MAX FLOW L/MIN	MAX PRESSURE BAR	CRACKING PRESSURE BAR	PRICE
V0178	VBPDE 1/4" A	1:5,5	20	350	4.5	47.78
V0180	VBPDE 3/8" A	1:5,5	30	350	4.5	£58.42
V0190	VBPDE 1/2 " A	1:4,5	55	350	3	£81.43

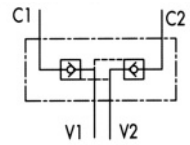

DOUBLE PILOT OPERATED CHECK VALVES FLANGEABLE

USE AND OPERATION

Pilot check valves are used to block the cylinder in both directions. Flow is free in one direction and blocked in the reverse direction until pilot pressure is applied. The face mounting enables assembly directly on the cylinder
Body: zinc-plated steel, **Internal parts**: Hardened and ground steel, **Seals**: Buna N standard, **Poppet type:** No leakage
Applications: connect v1 and v2 to pressure flow and c1 and c2 to the actuator through the flanges
ON REQUEST: WITH OUT SEAL ON PILOT PISTON, 1 BAR SPRING, 8 BAR SPRING

CODE	TYPE	PILOT RATIO	MAX FLOW L/MIN	MAX PRESSURE BAR	CRACKING PRESSURE BAR	PRICE
V0185	VBPDE 3/8" FL	1:5,5	30	350	4.5	£64.26
V0195	VBPDE 1/2" FL	1:4,5	55	350	3	£81.43
B5000	FLANGE FOR 3/8"					£17.25
B5500	FLANGE FOR 1/2"					£20.07

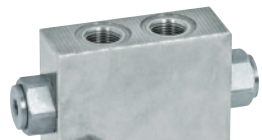

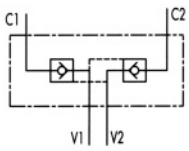

DOUBLE PILOT OPERATED CHECK VALVES FLANGEABLE BY SCREW

USE AND OPERATION

Pilot check valves are used to block the actuator in both directions. Flow is free in one direction and blocked in the reverse direction until pilot pressure is applied. This valve can be fixed directly on cylinder through the drilled screw supplied with the valve
Body: zinc-plated steel, **Internal parts**: Hardened and ground steel, **Seals**: Buna N standard, **Poppet type:** No leakage
Applications: connect v1 and v2 to pressure flow and c1 and c2 to the actuator (c1 by the pipe and c2 by the screw)
ON REQUEST: WITH OUT SEAL ON PILOT PISTON, 1 BAR SPRING, 8 BAR SPRING

CODE	TYPE	PILOT RATIO	MAX FLOW L/MIN	MAX PRESSURE BAR	CRACKING PRESSURE BAR	PRICE
V0178/FLV	VBPDE 1/4" A FLV	1:5,5	20	350	4.5	£64.60
V0180/FLV	VBPDE 3/4" A FLV	1:5,5	30	350	4.5	£81.43

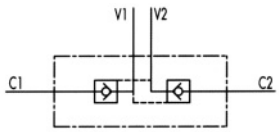

CYLINDRICAL DOUBLE PILOT OPERATED CHECK VALVE

USE AND OPERATION

Pilot check valves are used to block the cylinder in both directions. Flow is free in one direction and blocked in the reverse direction until pilot pressure is applied. Cylindrical type instead of standard one (parallelepiped)
Body: zinc-plated steel, **Internal parts**: Hardened and ground steel, **Seals**: Buna N standard, **Poppet type:** No leakage
Applications: connect v1 and v2 to pressure flow and c1 and c2 to the actuator

CODE	TYPE	PILOT RATIO	MAX FLOW L/MIN	MAX PRESSURE BAR	CRACKING PRESSURE BAR	PRICE
V0055	VBPDE 3/8" CYLINDRICAL	.1:5	45	350	3	£58.42

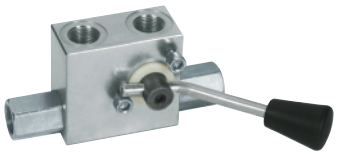

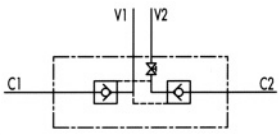

DOUBLE PILOT OPERATED CHECK VALVES WITH MANUAL SHUT-OFF

USE AND OPERATION

Pilot check valves are used to block the actuator in both directions. Flow is free in one direction and blocked in the reverse direction until pilot pressure is applied. These valves are very safe, that's why they are ideal to be assembled on crane hydraulic cylinders.
Body: zinc-plated steel, **Internal parts**: Hardened and ground steel, **Seals**: Buna N standard, **Poppet type:** No leakage
Applications: connect v1 and v2 to pressure flow and c1 and c2 to the actuator
ON REQUEST: WITH OUT SEAL ON PILOT PISTON, RIGHT OR LEFT SIDE LEVER (TO SPECIFY IN THE ORDER)

CODE	TYPE	PILOT RATIO	MAX FLOW L/MIN	MAX PRESSURE BAR	CRACKING PRESSURE BAR	PRICE
V0072	VBPDE 1/4" L C/RUBINETTO	1:5,5	20	350	4	£63.73
V0074	VBPDE 3/8" L C/RUBINETTO	1:5,5	30	350	3	£64.60
V0076	VBPDE 1/2" L C/RUBINETTO	1:5	50	350	3	£78.76
V0132*	VBPDE 1/4" L C/RUB. 2 CEXC 12L	1:5,5	20	350	4	£67.27
V0134*	VBPDE 3/8" L C/RUB. 2 CEXC 12L	1:5,5	30	350	4	£67.27
V0136*	VBPDE 1/2" L C/RUB.2 CC 15L	1:5	50	350	3	£83.19
* = Pipe DIN 2353						

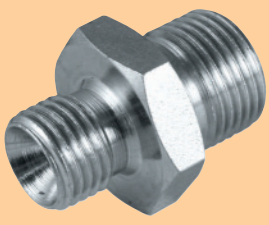

FLOWFIT

SEE OUR HYDRAULIC ADAPTOR SECTION FOR A FULL RANGE OF ADAPTOR SOLUTIONS.

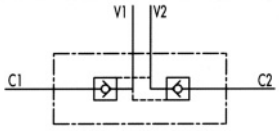

DOUBLE PILOT OPERATED CHECK VALVES WITH LATERAL JOINS

USE AND OPERATION

Pilot check valves are used to block the cylinder in both directions. Flow is free in one direction and blocked in the reverse direction until pilot pressure is applied. The feature of this valve is the side position of the ports

Body: zinc-plated steel, **Internal parts**: Hardened and ground steel, **Seals**: Buna N standard, **Poppet type:** No leakage

Applications: connect v1 and v2 to pressure flow and c1 and c2 to the actuator

ON REQUEST: WITH OUT SEAL ON PILOT PISTON

CODE	TYPE	PILOT RATIO	MAX FLOW L/MIN	MAX PRESSURE BAR	CRACKING PRESSURE BAR	PRICE
V0181	VBPDE 1/4" AL	1:5,5	20	350	4	£47.78
V0182	VBPDE 3/8" AL	1:5,5	35	350	3	£56.65

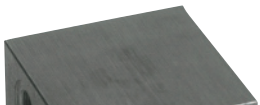

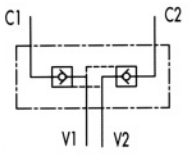

DOUBLE PILOT OPERATED CHECK VALVES TO WELD

USE AND OPERATION

Having inside the check cartridge, the function of this valve is nearly the same of the pilot check valves, Directly weld on the cylinder. Q 70 available in the single operated type. The feature of this valve is the high pressure drop, so as to reduce speed and to limit vibrations.

Body: Steel, **Internal parts**: Hardened and ground steel, **Seals**: Buna N standard, **Poppet type:** No leakage

Applications: connect v1 and v2 to pressure flow and weld c1 and c2 to the actuator. The check cartridge and pilot piston have to be mounted after installation of the valve, so they are supplied separately

CODE	TYPE	PILOT RATIO	MAX FLOW L/MIN	MAX PRESSURE BAR	CRACKING PRESSURE BAR	PRICE
V1011	VBAS 70	1:5,5	25	350	3	£72.66
V1010	VBAS 80	1:5,5	25	350	2	£79.10
V1012	VBAS 90	1:5,5	25	350	2	£87.38

SINGLE PILOT OPERATED CHECK VALVES

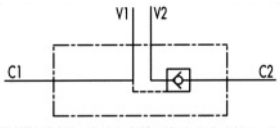

SINGLE PILOT OPERATED CHECK VALVE

USE AND OPERATION

These valves are used to block the cylinder in one direction. The flow is free in one direction and blocked in the reverse direction until pilot pressure is applied. They are easily assembled on cylinders.

Specific distance-centre mounting fittings kit on request.

Body: zinc-plated steel, **Internal parts**: Hardened and ground steel, **Seals**: Buna N standard, **Poppet type:** No leakage

Applications: connect v1 and v2 to pressure flow, c1 to the free flow side of the actuator and c2 to the actuator's side you want the flow to be blocked

ON REQUEST: WITH OUT SEAL ON PILOT PISTON, 1 BAR SPRING, 8 BAR SPRING

CODE	TYPE	PILOT RATIO	MAX FLOW L/MIN	MAX PRESSURE BAR	CRACKING PRESSURE BAR	PRICE
V0220	VBPSE 1/4" L 4 VIE	15,5	20	350	4	£29.38
V0230	VBPSE 3/8" L 4 VIE	1:5,5	35	350	3	£34.30
V0240	VBPSE 1/2" L 4 VIE	1:5	50	350	6	£41.66
V0250	VBPSE 3/8" 4 VIE	1:5	45	350	8	£34.30
V0260	VBPSE 1/2" 4 VIE	1:4	70	350	3.5	£50.52
V0245	VBPSE 3/4" 4 VIE	1:4	100	350	2	£72.19

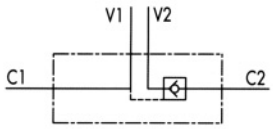

SINGLE PILOT OPERATED CHECK VALVES FOR 12MM PIPE MOUNTING (DIN 2353)

USE AND OPERATION

These valves are used to block the cylinder in one direction. The flow is free in one direction and blocked in the reverse direction until pilot pressure is applied

Body: zinc-plated steel, **Internal parts**: Hardened and ground steel, **Seals**: Buna N standard, **Poppet type:** No leakage

Applications: connect v1 and v2 to the pressure flow, c1 to the free flow side of the actuator and c2 to the actuator's side you want the flow to be blocked

ON REQUEST: WITH OUT SEAL ON PILOT PISTON, WITH OUT NUT AND OLIVE, 1 BAR SPRING, 8 BAR SPRING

CODE	TYPE	PILOT RATIO	MAX FLOW L/MIN	MAX PRESSURE BAR	CRACKING PRESSURE BAR	PRICE
V0090/SE	VBPSE 1/4" L 2 CEXC	1:5,5	20	350	4	£39.70
V0110/SE	VBPSE 3/8" L 2 CEXC	1:5,5	30	350	4	£39.70
V0135/SE	VBPSE 1/2 L 2 CC	1:5	50	350	3	£52.33

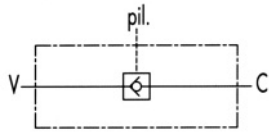

3 WAYS SINGLE PILOT OPERATED CHECK VALVES, IN LINE

USE AND OPERATION

These valves are used to block the cylinder in one direction. The flow is free in one direction and blocked in the reverse direction until pilot pressure is applied

Body: Yellow-plated steel, **Internal parts**: Hardened and ground steel, **Seals**: Buna N standard, **Poppet type:** No leakage

Applications: connect V to the pressure flow, c to the actuator's side you want the flow to be blocked and pil to the pilot line

ON REQUEST: 8 BAR SPRING

CODE	TYPE	PILOT RATIO	MAX FLOW L/MIN	MAX PRESSURE BAR	CRACKING PRESSURE BAR	PRICE
V0201	VBPSL 1/4"	1:9,8	15	350	2.5	£37.90
V0202	VBPSL 3/8"	1:6,5	30	300	5	£43.86
V0203	VBPSL 1/2"	1:4,6	45	300	3	£49.08
V0204	VBPSL 3/4"	1:4,4	80	250	0.5	£82.85
V0205	VBPSL 1"	1:3,5	120	220	1	£180.39

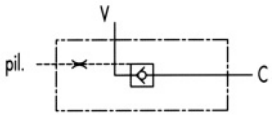

SINGLE PILOT OPERATED CHECK VALVES, HIGH PILOT

USE AND OPERATION

These valves are used to block the cylinder in one direction. The flow is free in one direction and blocked in the reverse direction until pilot pressure is applied, Thanks to its high pilot ratio and to a time-lag locking device, it's suitable for circuits with heavy loads to avoid vibrations.

WARNING: Please ask the producer for use with distributors or open centre solenoid valves

Body: zinc-plated steel, **Internal parts**: Hardened and ground steel, **Seals**: Buna N standard, **Poppet type:** No leakage

Applications: connect V to the pressure flow, c to the actuator's side you want the flow to be blocked and pil to the pilot line

ON REQUEST: 1 BAR SPRING, 8 BAR SPRING

CODE	TYPE	PILOT RATIO	MAX FLOW L/MIN	MAX PRESSURE BAR	CRACKING PRESSURE BAR	PRICE
V0273	VBL/3 SE 1/4"	1:8	20	350	4	£40.96
V0275	VBL/3 SE 3/8"	1:8	40	350	3.5	£46.91
V0277	VBL/3 SE 1/2"	1:7	70	350	3.5	£52.69

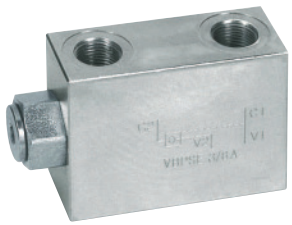

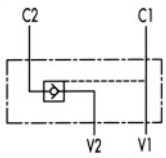

SINGLE PILOT OPERATED CHECK VALVES TYPE A

USE AND OPERATION

These valves are used to block the cylinder in one direction. flow is free in one direction and blocked in the reverse direction until pilot pressure is applied.

Body: zinc-plated steel, **Internal parts**: Hardened and ground steel, **Seals**: Buna N standard, **Poppet type:** No leakage

Applications: connect v1 to the pressure flow, c1 to the free flow side of the actuator and c2 to the actuator's side you want the flow to be blocked

ON REQUEST: WITHOUT SEAL ON PILOT PISTON 1 BAR SPRING, 8 BAR SPRING

CODE	TYPE	PILOT RATIO	MAX FLOW L/MIN	MAX PRESSURE BAR	CRACKING PRESSURE BAR	PRICE
V0272	VBPSE 1/4" A	1:5,5	20	350	4.5	£48.17
V0274	VBPSE 3/8" A	1:5,5	30	350	4.5	£49.63
V0276	VBPSE 1/2" A	1:4,5	55	350	3	£59.56

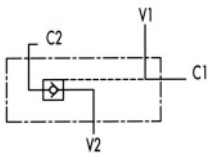

SINGLE PILOT OPERATED CHECK VALVES FLANGEABLE

USE AND OPERATION

These valves are used to block the cylinder in one direction. flow is free in one direction and blocked in the reverse direction until pilot pressure is applied, This valve can be fixed directly on cylinder

Body: zinc-plated steel, **Internal parts**: Hardened and ground steel, **Seals**: Buna N standard, **Poppet type:** No leakage

Applications: Connect v1 and v2 to the pressure flow, c1 to the free flow side of the actuator and c2 to the actuator's side you want the flow to be blocked

ON REQUEST: WITHOUT SEAL ON PILOT PISTON

CODE	TYPE	PILOT RATIO	MAX FLOW L/MIN	MAX PRESSURE BAR	CRACKING PRESSURE BAR	PRICE
V0268	VBPSE 1/4" FL	1:5,5	20	350	4.5	£53.78
V0269	VBPSE 3/8" FL	1:5,5	30	350	4.5	£55.05
V0270	VBPSE 1/2" FL	1:4,5	55	350	3	£67.67

FLOWFIT

SEE OUR HYDRAULIC ADAPTOR SECTION FOR A FULL RANGE OF ADAPTOR SOLUTIONS.

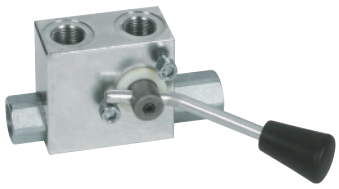

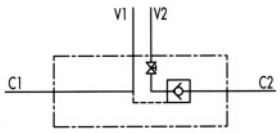

SINGLE PILOT OPERATED CHECK VALVES WITH MANUAL SHUT-OFF

USE AND OPERATION

Pilot check valves are used to block the actuator in both direction. Flow is free in one direction and blocked in the reverse direction until pilot pressure is applied. These valves are very safe, that's why they are ideal to be assembled on crane hydraulic cylinders. The shut-off system enables to exclude and risk caused by possible manoeuvring errors.
Body: zinc-plated steel, **Internal parts**: Hardened and ground steel, **Seals**: Buna N standard, **Poppet type:** No leakage
Applications: Connect v1 and v2 to the pressure flow, c1 to the free flow side of the actuator and c2 to the actuator's side you want the flow to be blocked
ON REQUEST: WITHOUT SEAL ON PILOT PISTON, RIGHT OF LEFT SIDE LEVER (TO SPECIFY IN THE ORDER)

CODE	TYPE	PILOT RATIO	MAX FLOW L/MIN	MAX PRESSURE BAR	CRACKING PRESSURE BAR	PRICE
V0072/SE	VBPSE 1/4" L C/RUBINETTO	1:5,5	20	350	4	£63.17
V0074/SE	VBPSE 3/8" L C/RUBINETTO	1:5,5	30	350	3	£63.17
V0076/SE	VBPSE 1/2" L C/RUBINETTO	1:5	50	350	3	£77.59
V0132/SE	VBPSE 1/4" L C/RUB.2 CEXC	1:5,5	20	350	4	£64.98
V0134/SE	VBPSE 3/8" L C/RUB.2 CEXC	1:5,5	30	350	4	£64.98
V0136/SE	VBPSE 1/2" L C/RUB.2 CC	1:5	50	350	3	£80.70

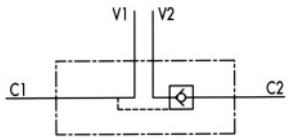

EXTERNAL SINGLE PILOT OPERATED CHECK VALVES

USE AND OPERATION

These valves are used to block the cylinder in one direction. The flow is free in one direction and blocked in the reverse one until pilot pressure is applied. Separated mounting enables valves to be insensitive to back pressure on the line V. Assembly on 2 or more parallel cylinders with flow regulator valve to allow balanced and soft descent is highly recommended
Body: Aluminium, **Internal parts**: Hardened and ground steel, **Seals**: Buna N standard, **Poppet type:** No leakage
Applications: Connect v1 and v2 to the pressure flow and c1 and c2 to the actuator as indicated in the diagram

CODE	TYPE	PILOT RATIO	MAX FLOW L/MIN	MAX PRESSURE BAR	CRACKING PRESSURE BAR	PRICE
V0231	VBPSE 3/8" PS	1:12	35	350	3	£60.46

OVERCENTRE VALVES

USE AND OPERATION

These valves are used to control actuator's movement and block in one direction in order to enable the following functions: Under control descent of a load: load's weight doesn't carry it way as the valve prevent any cavitations of the actuator. Limited maximum pressure in case of shocks created by loads, over loads or sudden manoeuvring (load control with open centre distributor)
Body: Zinc-plated steel **Internal parts**: Hardened and ground steel, **Seals**: Buna N standard, **Tightness**: minor leakage
Standard settings: 320 bar
Valve setting must be at least 1,3 times more than load pressure in order to enable the valve to close even when undergone to the maximum load pressure
Applications: Connect v1 and v2 to the pressure flow, c1 to the free flow side of the actuator and c2 to the actuator's side you want the low to be blocked. In-line mounting
ON REQUEST: OTHER SETTINGS AVAILABLE, PILOT RATION 1:8 (SPECIFY CODE/RP18), SEALING CAP (CODE / P) AND ARRANGED SEALING CAP (CODE/PP)

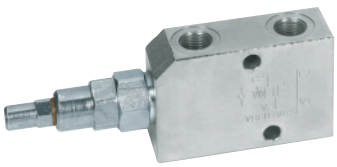

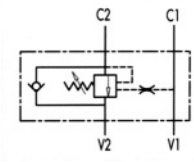

SINGLE OVER CENTRE VALVES

CODE	TYPE	PILOT RATIO	MAX FLOW L/MIN	MAX PRESSURE BAR	PRICE
V0390	VBCD 3/8" SE	1:3,1	35	350	£84.26
V0410	VBCD 1/2" SE	1:3,1	50	350	£85.34
V0411	VBCD 3/4" SE	1:5,5	105	350	£140.64
V0390/RP18	VBCD 3/8" SE RP 1 : 8	1:8	35	350	£100.38
V0410/RP18	VBCD 1/2" SE RP 1 : 8	1:8	50	350	£102.58
V0411/RP18	VBCD 3/4" SE RP 1 : 8	1:8	105	350	£167.34

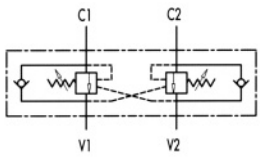

DOUBLE OVERCENTRE VALVES

CODE	TYPE	PILOT RATIO	MAX FLOW L/MIN	MAX PRESSURE BAR	PRICE
V0420	VBCD 3/8" DE	1:3,1	35	350	£137.04
V0430	VBCD 1/2" DE	1:3,1	50	350	£141.84
V0431	VBCD 3/4" DE	1:5,5	105	350	£216.37
V0420/RP18	VBCD 3/8" DE RP 1 : 8	1:8	35	350	£163.67
V0430/RP18	VBCD 1/2" DE RP 1 : 8	1:8	50	350	£171.15
V0431/RP18	VBCD 3/4" DE RP 1 : 8	1:8	105	350	£260.21

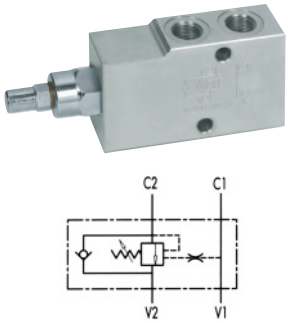

SINGLE OVERCENTRE VALVES TYPE A

The A type is different in the connections position and the pilot ratio

CODE	TYPE	PILOT RATIO	MAX FLOW L/MIN	MAX PRESSURE BAR	PRICE
V0382	VBCD 1/4" SE/A	1:4,5	20	350	£81.22
V0392	VBCD 3/8" SE/A	1:4,5	40	350	£81.22
V0412	VBCD 1/2" SE/A	1:4,5	60	350	£85.73
V0419	VBCD 3/4" SE/A	1:5,5	95	350	£141.69
V0417	VBCD 1" SE/A	1:6,2	160	350	£255.65

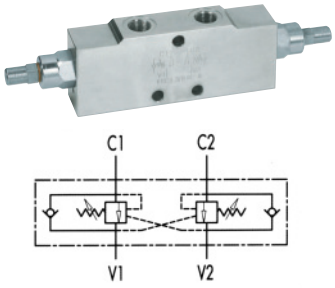

DOUBLE OVERCENTRE VALVES TYPE A

The A type is different in the connections position and the pilot ratio

CODE	TYPE	PILOT RATIO	MAX FLOW L/MIN	MAX PRESSURE BAR	PRICE
V0418	VBCD 1/4" DE/A	1:4,5	20	350	£133.55
V0422	VBCD 3/8" DE/A	1:4,5	40	350	£133.55
V0432	VBCD 1/2" DE/A	1:4,5	60	350	£140.76
V0435	VBCD 3/4" DE/A	1:5,5	95	350	£214.78
V0436	VBCD 1" DE/A	1:6,2	160	350	£373.75

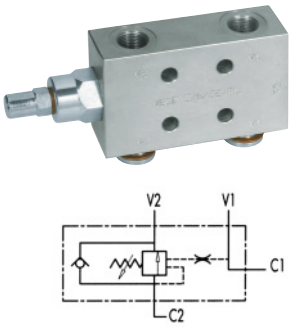

SINGLE OVERCENTRE VALVES FLANGEABLE

Flange ports enable direct mounting of the valve on the actuator

CODE	TYPE	PILOT RATIO	MAX FLOW L/MIN	MAX PRESSURE BAR	PRICE
V0400	VBCD 3/8" SE/FL	1:4,5	40	350	£90.60
V0402	VBCD 1/2" SE/FL	1:4,5	60	350	£95.64
B8000	FLANGE FOR 3/8" & 1/2" SE				£11.81

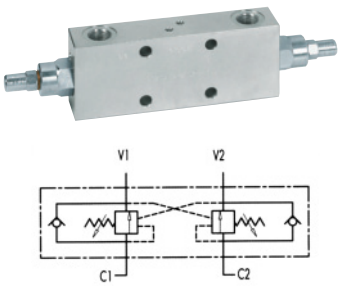

DOUBLE OVERCENTRE VALVES FLANGEABLE

Flange ports enable direct mounting of the valve on the actuator

CODE	TYPE	PILOT RATIO	MAX FLOW L/MIN	MAX PRESSURE BAR	PRICE
V0424	VBCD 3/8" DE/FL	1:4,5	40	350	£145.73
V0434	VBCD 12" DE/FL	1:4,5	60	350	£153.41
B8500	FLANGE FOR 3/8" & 1/2" DE				£17.26

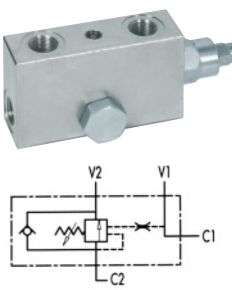

SINGLE OVERCENTRE VALVES FLANEABLE BY SCREW

The special connection by screw, supplied with valve, enables direct mounting of the valve on the actuator

CODE	TYPE	PILOT RATIO	MAX FLOW L/MIN	MAX PRESSURE BAR	PRICE
V0392/FLV	VBCD 3/8" SE/A FLV	1:4,5	40	350	£98.01
V0412/FLV	VBCD 1/2" SE/A FLV	1:4,5	60	350	£102.88

DOUBLE OVERCENTRE VALVES FLANGEABLE BY SCREW

The special connection by screw, supplied with valve, enables direct mounting of the valve on the actuator

CODE	TYPE	PILOT RATIO	MAX FLOW L/MIN	MAX PRESSURE BAR	PRICE
V0422/FLV	VBCD 3/8" DE/A FLV	1:4,5	40	350	£160.63
V0432/FLV	VBCD 1/2" DE/A FLV	1:4,5	60	350	£167.84

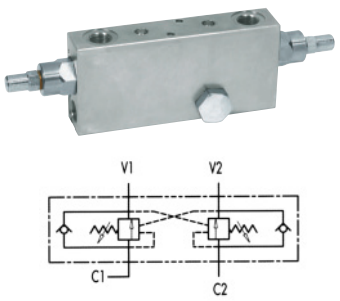

SEE KOMPASS VALVE SECTION FOR MORE OVERCENTRE VALVE OPTIONS.

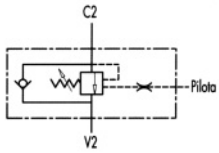

SINGLE OVER CENTRE VALVES, 3 WAYS

External pilot line

CODE	TYPE	PILOT RATIO	MAX FLOW L/MIN	MAX PRESSURE BAR	PRICE
V0394	VBCD 3/8" SE 3 VIE	1:4,5	40	350	£77.18
V0414	VBCD 1/2" SE 3 VIE	1:4,5	60	350	£80.41

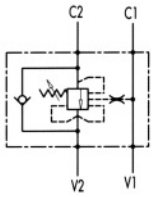

SINGLE OVERCENTRE VALVES FOR CLOSED CENTRE

This valve is ideal when normal overcentre valves doesn't work properly as it's not sensitive to back pressure

CODE	TYPE	PILOT RATIO	MAX FLOW L/MIN	MAX PRESSURE BAR	PRICE
V0391	VBCD 3/8" SE-A-CC	1:4,5	40	350	£98.83
V0393	VBCD 1/2" SE-A-CC	1:4,5	60	350	£102.40
V0407	VBCD 3/8" SE CC	1:3,1	35	350	£111.53
V0408	VBCD 1/2 " SE CC	1:3,1	50	350	£114.61
V0409	VBCD 3/4" SE CC	1:5,5	105	350	£177.77
V0407/RP18	VBCD 3/8" SE CC	1:8	35	350	£122.75
V0408/RP18	VBCD 1/2 " SE CC	1:8	50	350	£126.08
V0409/RP18	VBCD 3/4" SE CC	1:8	105	350	£195.39

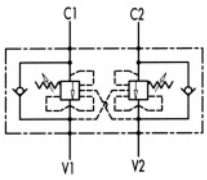

DOUBLE OVERCENTRE VALVES FOR CENTRE CLOSED

This valve is ideal when normal overcentre valves doesn't work properly as it's not sensitive to back pressure

CODE	TYPE	PILOT RATIO	MAX FLOW L/MIN	MAX PRESSURE BAR	PRICE
V0441	VBCD 3/8" DE CC	1:3,1	35	350	£192.58
V0442	VBCD 1/2" DE CC	1:3,1	50	350	£199.07
V0443	VBCD 3/4" DE CC	1:5,5	105	350	£283.36
V0441/RP18	VBCD 3/8" DE CC	1:8	35	350	£211.87
V0442/RP18	VBCD 1/2" DE CC	1:8	50	350	£218.94
V0443/RP18	VBCD 3/4" DE CC	1:8	105	350	£311.38
V0421	VBCD 3/8" DE-A-CC	1:4,5	40	350	£167.40
V0423	VBCD 1/2" DE-A-CC	1:4,5	60	350	£174.52

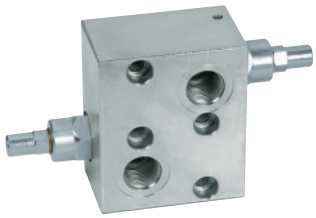

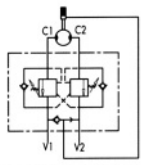

VBCDF DE OMP/OMR

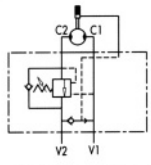

VBCDF SE OMP/OMR

OVERCENTRE VALVES FLANGEABLE ON DANFOSS MOTORS OMP/OMR

Direct flange is ideal for Danfoss motor type omp-omr and provides a maximum safety, very low pressure drops and solid installation

CODE	TYPE	PILOT RATIO	MAX FLOW L/MIN	MAX PRESSURE BAR	PRICE
V0415	VBCDF 1/2" SE OMP-OMR	1:4,5	50	350	£103.77
V0425	VBCDF 1/2" DE OMP-OMR	1:4,5	50	350	£173.89
V0415/SF	VBCDF 1/2" SE OMP-OMR SF/ BRAKE UNCLAPING	1:4,5	50	350	£114.85
V0425/SF	VBCDF 1/2" DE OMP-OMR SF/ BRAKE UNCLAPING	1:4,5	50	350	£185.16
NB. BRAKE UNCLAPING MEANS " A MECHANICAL FAIL SAFE BRAKE "					

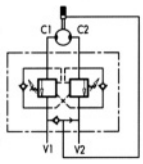

VBCDF DE OMS

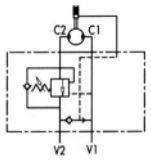

VBCDF SE OMS

OVERCENTRE VALVES FLANGEABLE ON DANFOSS MOTORS OMS

Direct flange is ideal for danfoss engine type oms and provides a maximum safety, very low pressure drops and solid installation

CODE	TYPE	PILOT RATIO	MAX FLOW L/MIN	MAX PRESSURE BAR	PRICE
V0416	VBCDF 1/2" SE OMS	1:4,5	50	350	£101.06
V0426	VBCDF 1/2" DE OMS	1:4,5	50	350	£171.47
V0416/SF	VBCDF 1/2" SE OMS /SF BRAKE UNCLAPING	1:8	50	350	£110.10
V0426/SF	VBCDF 1/2" DE OMS SF/ BRAKE UNCLAPING	1:8	50	350	£181.00
NB. BRAKE UNCLAPING MEANS " A MECHANICAL FAIL SAFE BRAKE "					

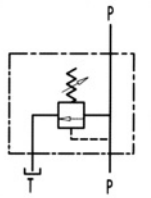

LIGHT RELIEF VALVES

USE AND OPERATION

The relief valve provides overload protection in a fast and accurate way: when it reaches pressure setting, the valve opens allowing pressure relief in order not to exceed this setting

Body: Zinc-plated steel **Internal parts**: Hardened and ground steel, **Seals**: Buna N standard, **Poppet type**: minor leakage

Applications:Connect circuit port with pressure to P and tank port to T, Port p is reversible

ON REQUEST: DIFFERENT SETTING RANGE AVAILABLE (SEE TABLE BELOW) OTHER SETTINGS AVAILABLE (CODE/T: PLEASE SPECIFY THE DESIRED SETTING)

CODE	TYPE	MAX FLOW L/MIN	MAX PRESSURE BAR	PRICE
V0689	VMP 1/4" L	30	300	£27.64
V0690	VMP 3/8" L	40	300	£36.06
V0689/T	VMP 1/4" L PRESSURE PRESET	30	300	£32.47
V0690/T	VMP 3/8" L PRESSURE PRESET	40	300	£35.05
V0689/V	VMP 1/4" L HANDKNOB	30	300	£33.73
V0690/V	VMP 3/8" L HANDKNOB	40	300	£36.32
V0689/P	VMP 1/4" L SEALING CAP	30	300	£35.36
V0690/P	VMP 3/8" L SEALING CAP	40	300	£38.02

SPRINGS

SETTING RANGE BAR	PRESSURE INCREASE (BAR/TURN)	STANDARD SETTING BAR
10 - 50*	7	30
10 - 180 (Standard)	40	100
80 - 300	50	150
* = For setting less than 70 Bar Q = 12 l/m		

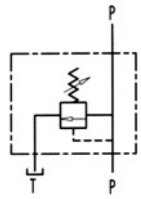

RELIEF VALVES

USE AND OPERATION

The relief valve provides overload protection in a fast and accurate way: when it reaches pressure setting, the valve opens allowing pressure relief in order not to exceed this setting

Body: Zinc-plated steel **Internal parts**: Hardened and ground steel, **Seals**: Buna N standard, **Poppet type**: minor leakage

Applications:Connect circuit port with pressure to P and tank port to T, Port p is reversible

ON REQUEST: DIFFERENT SETTING RANGE AVAILABLE (SEE TABLE BELOW) OTHER SETTINGS AVAILABLE (CODE/T: PLEASE SPECIFY THE DESIRED SETTING)

CODE	TYPE	MAX FLOW L/MIN	MAX PRESSURE BAR	PRICE
V0700	VMP 3/8"	45	300	£36.65
V0710	VMP 1/2"	70	300	£40.23
V0720	VMP 3/4"	120	300	£52.89
V0700/T	VMP 3/8" PRESSURE PRESET	45	300	£42.56
V0710/T	VMP 1/2" PRESSURE PRESET	70	300	£46.68
V0720/T	VMP 3/4" PRESSURE PRESET	120	300	£61.23
V0700/V	VMP 3/8" HANDKNOB	45	300	£43.65
V0710/V	VMP 1/2" HANDKNOB	70	300	£47.63
V0720/V	VMP 3/4" HANDKNOB	120	300	£61.98
V0700/P	VMP 3/8" SEALING CAP	45	300	£45.55
V0710/P	VMP 1/2" SEALING CAP	70	300	£49.60
V0720/P	VMP 3/4" SEALING CAP	120	300	£64.18

SPRINGS

SETTING RANGE BAR	PRESSURE INCREASE (BAR/TURN)	STANDARD SETTING BAR
10 - 50*	7	30
20 - 100	12	75
10 - 180 (Standard)	30	90
50 - 250	45	130
80 - 300	50	150
* = For setting less than 70 Bar Q = 12 l/m		

KOMPASS®

SEE KOMPASS VALVE SECTION FOR MORE RELIEF VALVES AND RELIEF UNLOADING OPTIONS.

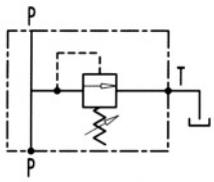

DIFFERENTIAL TYPE RELIEF VALVES

USE AND OPERATION

The relief valve provides overload protection in a fast and accurate way: when it reaches pressure setting, the valve opens allowing pressure relief in order not to exceed this setting. The differential valve opening is slower than the standard one, but the setting is more stable when the flow changes.

Body: Zinc-plated steel **Internal parts**: Hardened and ground steel, **Seals**: Buna N standard, **Poppet type**: minor leakage

Applications:Connect circuit port with pressure to P and tank port to T. The 1" size is supplied with a double exit T (1 exit can be capped according with mounting needs)

ON REQUEST: DIFFERENT SETTING RANGE AVAILABLE (SEE TABLE BELOW) OTHER SETTINGS AVAILABLE (CODE/T: PLEASE SPECIFY THE DESIRED SETTING)

CODE	TYPE	MAX FLOW L/MIN	MAX PRESSURE BAR	PRICE
V0725	VMPP 3/4"	120	400	£116.60
V0735	VMPP 1"	180	400	£135.19
V0725/T	VMPP 3/4" PRESSURE PRESET	120	400	£120.91
V0735/T	VMPP 1" PRESSURE PRESET	180	400	£139.74
V0725/V	VMPP 3/4" HANDKNOB	120	400	£120.52
V0735/V	VMPP 1" HANDKNOB	180	400	£139.01
V0725/P	VMPP 3/4" SEALING CAP	120	400	£120.28
V0735/P	VMPP 1" SEALING CAP	180	400	£142.71

SPRINGS

SETTING RANGE BAR	PRESSURE INCREASE (BAR/TURN)	STANDARD SETTING BAR
20 - 200	40	160
50 - 400 (Standard)	80	180

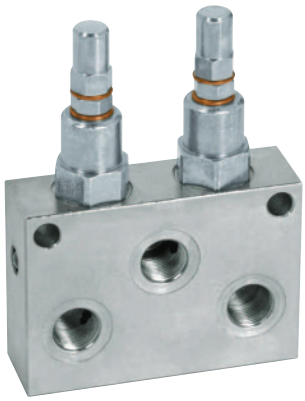

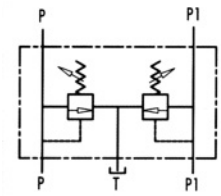

DOUBLE RELIEF VALVES

USE AND OPERATION

Made up by 2 relief valves, the double relief valve provides overload protection in 2 lines-hydraulic circuits with 1 tank. It allows 2 different pressure setting

Body: Zinc-plated steel **Internal parts**: Hardened and ground steel, **Seals**: Buna N standard, **Poppet type**: minor leakage

Applications: Connect P and P1 to the pressure flow, the remaining P1 and P ports to the 2 lines to be controlled but in the reverse way; connect T to the tank.

ON REQUEST: DIFFERENT SETTING RANGE AVAILABLE (SEE TABLE BELOW) OTHER SETTINGS AVAILABLE (CODE/T: PLEASE SPECIFY THE DESIRED SETTING)

CODE	TYPE	MAX FLOW L/MIN	MAX PRESSURE BAR	PRICE
V0732	VMPP 3/8"	45	300	£74.60
V0734	VMPP 1/2"	70	300	£76.32
V0732/T	VMPP 3/8" PRESSURE PRESET	45	300	£79.80
V0734/T	VMPP 1/2" PRESSURE PRESET	70	300	£82.02
V0732/V	VMPP 3/8" HANDKNOB	45	300	£82.43
V0734/V	VMPP 1/2" HANDKNOB	70	300	£84.64
V0732/P	VMPP 3/8" SEALING CAP	45	300	£86.10
V0734/P	VMPP 1/2" SEALING CAP	70	300	£88.32

SPRINGS

SETTING RANGE BAR	PRESSURE INCREASE (BAR/TURN)	STANDARD SETTING BAR
10 - 50*	7	30
20 - 100	12	75
10 - 180 (Standard)	30	90
50 - 250	45	130
80 - 300	50	150
* = For setting less than 70 Bar Q = 12 l/m		

KOMPASS®

SEE KOMPASS VALVE SECTION FOR MORE RELIEF VALVES AND RELIEF UNLOADING OPTIONS.

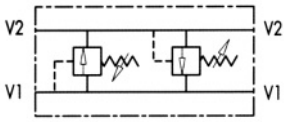

DUAL CROSS RELIEF VALVES

USE AND OPERATION

Made up by 2 relief valves with crossed tank, this valve is used to block pressure to a certain setting in the 2 ports of an actuator/hydraulic motor. It's ideal to provide protection against sudden shock pressures and to adjust different pressures in the 2 ports of an hydraulic circuit as well.
Body: Zinc-plated steel **Internal parts**: Hardened and ground steel, **Seals**: Buna N standard, **Poppet type**: minor leakage
Applications: Connect V1 and V2 to the pressure flow or to the actuator/hydraulic motor. Vice versa for the remaining port V1 and V2. Mounting by the actuator is highly recommended in order to avoid pressure drops.
ON REQUEST: DIFFERENT SETTING RANGE AVAILABLE (SEE TABLE BELOW) OTHER SETTINGS AVAILABLE (CODE/T: PLEASE SPECIFY THE DESIRED SETTING)

CODE	TYPE	MAX FLOW L/MIN	MAX PRESSURE BAR	PRICE
V0438	VAU 1/4"	30	300	£57.76
V0440	VAU 3/8"	45	300	£63.17
V0450	VAU 1/2"	70	300	£66.78
V0460	VAU 3/4"	110	300	£88.44
V0438/T	VAU 1/4" PRESSURE PRESET	30	300	£62.15
V0440/T	VAU 3/8" PRESSURE PRESET	45	300	£69.23
V0450/T	VAU 1/2" PRESSURE PRESET	70	300	£72.39
V0460/T	VAU 3/4" PRESSURE PRESET	110	300	£94.31
V0438/V	VAU 1/4" HANDKNOB	30	300	£64.88
V0440/V	VAU 3/8" HANDKNOB	45	300	£70.07
V0450/V	VAU 1/2" HANDKNOB	70	300	£74.79
V0460/V	VAU 3/4" HANDKNOB	110	300	£96.33
V0438/P	VAU 1/4" SEALING CAP	30	300	£68.08
V0440/P	VAU 3/8" SEALING CAP	45	300	£73.39
V0450/P	VAU 1/2" SEALING CAP	70	300	£78.28
V0460/P	VAU 3/4" SEALING CAP	110	300	£100.17

SPRINGS

SETTING RANGE BAR	PRESSURE INCREASE (BAR/TURN)	STANDARD SETTING BAR
10 - 50*	7	30
20 - 100	12	75
10 - 180 (Standard)	30	90
50 - 250	45	130
80 - 300	50	150
* = For setting less than 70 Bar Q = 12 l/m		

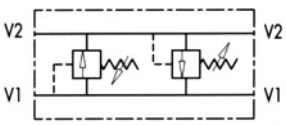

DIFFERENTIAL DUAL CROSS RELIEF VALVES

USE AND OPERATION

Made up by 2 relief valves with crossed tank, this valve is used to block pressure to a certain setting in the 2 ports of an actuator/hydraulic motor. It's ideal to provide protection against sudden shock pressures and to adjust different pressures in the 2 ports of an hydraulic circuit as well. The differential valve makes the opening slower but more constant setting even with flow changes.
Body: Zinc-plated steel **Internal parts**: Hardened and ground steel, **Seals**: Buna N standard, **Poppet type**: minor leakage
Applications: Connect V1 and V2 to the pressure flow or to the actuator/hydraulic motor. Vice versa for the remaining port V1 and V2. Mounting by the actuator is highly recommended in order to avoid pressure drops.
ON REQUEST: DIFFERENT SETTING RANGE AVAILABLE (SEE TABLE BELOW) OTHER SETTINGS AVAILABLE (CODE/T: PLEASE SPECIFY THE DESIRED SETTING)

CODE	TYPE	MAX FLOW L/MIN	MAX PRESSURE BAR	PRICE
V0470	VAU 1"	160	400	£234.96
V0470/T	VAU 1" PRESSURE PRESET	160	400	£238.92
V0470/V	VAU 1" HANDKNOB	160	400	£242.55
V0470/P	VAU 1" SEALING CAP	160	400	£244.40

SPRINGS

SETTING RANGE BAR	PRESSURE INCREASE (BAR/TURN)	STANDARD SETTING BAR
20 - 200	40	160
50 - 400 (Standard)	80	180

KOMPASS®

SEE KOMPASS VALVE SECTION FOR PRESSURE REDUCING VALVES

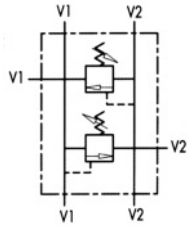

DUAL CROSS RELIEF VALVES

USE AND OPERATION

Made up by 2 relief valves with crossed tank, this valve is used to block pressure to a certain setting in the 2 ports of an actuator/hydraulic motor. It's ideal to provide protection against sudden shock pressures and to adjust different pressures in the 2 ports of an hydraulic circuit as well. The 6 ports (2 ways in and 4 ways out reversible) enable to use just 1 valve for 2 cylinders.

Body: Zinc-plated steel **Internal parts**: Hardened and ground steel, **Seals**: Buna N standard, **Poppet type**: minor leakage

Applications: Connect V1 and V2 to the pressure flow or to the actuator/hydraulic motor. Vice versa for the remaining port V1 and V2. Mounting by the actuator is highly recommended in order to avoid pressure drops.

ON REQUEST: DIFFERENT SETTING RANGE AVAILABLE (SEE TABLE BELOW) OTHER SETTINGS AVAILABLE (CODE/T: PLEASE SPECIFY THE DESIRED SETTING)

CODE	TYPE	MAX FLOW L/MIN	MAX PRESSURE BAR	PRICE
V0737	VMPDI 3/8"	45	300	£74.36
V0738	VMPDI 1/2"	70	300	£79.42
V0737/T	VMPDI 3/8" PRESSURE PRESET	45	300	£79.42
V0738/T	VMPDI 1/2" PRESSURE PRESET	70	300	£84.14
V0737/V	VMPDI 3/8" HANDKNOB	45	300	£81.87
V0738/V	VMPDI 1/2" HANDKNOB	70	300	£86.41
V0737/P	VMPDI 3/8" SEALING CAP	45	300	£85.10
V0738/P	VMPDI 1/2" SEALING CAP	70	300	£89.82

SPRINGS

SETTING RANGE BAR	PRESSURE INCREASE (BAR/TURN)	STANDARD SETTING BAR
10 - 50*	7	30
20 - 100	12	75
10 - 180 (Standard)	30	90
50 - 250	45	130
80 - 300	50	150
* = For setting less than 70 Bar Q = 12 l/m		

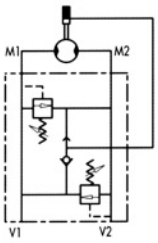

DUAL CROSS RELIEF VALVE FLANGEABLE ON DANFOSS MOTORS OMS-OMP/OMR-OMT

USE AND OPERATION

Made up by 2 relief valves with crossed tank, this valve is used to block pressure to a certain setting in the 2 ports of an actuator/hydraulic motor. It's ideal to provide protection against sudden shock pressures and to adjust different pressures in the 2 ports of an hydraulic circuit as well. Direct flange is ideal for Danfoss motors type OMS, OMP/OMR and OMT and provides a maximum safety, very low pressure drops and solid installation.

Body: Zinc-plated steel **Internal parts**: Hardened and ground steel, **Seals**: Buna N standard, **Poppet type**: minor leakage

Applications: Flange M1 and M2 directly to the motor and connect V1 and V2 to pressure flow.

ON REQUEST: DIFFERENT SETTING RANGE AVAILABLE (SEE TABLE BELOW) OTHER SETTINGS AVAILABLE (CODE/T: PLEASE SPECIFY THE DESIRED SETTING). SINGLE ACTING WITH JUST 1 RELIEF AVAILABLE (CODE/ SE). BRAKE UNCLAPING (CODE/ SF)

CODE	TYPE	MAX FLOW L/MIN	MAX PRESSURE BAR	PRICE
V0490	VAU 1/2" OMS	50	300	£78.46
V0500	VAU 1/2" OMP/OMR	60	300	£79.95
V0505	VAU 3/4" OMT	100	300	£95.64
V0490/SE	VAU 1/2" OMS SE/ SINGLE ACTING	50	300	£75.55
V0500/SE	VAU 1/2" OMP/OMR SE/SINGLE ACTING	60	300	£78.02
V0505/SE	VAU 3/4" OMT SE/SINGLE ACTING	100	300	£93.48
V0490/T	VAU 1/2" OMS PRESSURE PRESET	50	300	£82.12
V0500/T	VAU 1/2" OMP/OMR PRESSURE PRESET	60	300	£83.95
V0505/T	VAU 3/4" OMT PRESSURE PRESET	100	300	£99.44
V0490/V	VAU 1/2" OMS HANDKNOB	50	300	£85.94
V0500/V	VAU 1/2" OMP/OMR HANDKNOB	60	300	£88.03
V0505/V	VAU 3/4" OMT HANDKNOB	100	300	£85.30
V0490/P	VAU 1/2" OMS SEALING CAP	50	300	£88.00
V0500/P	VAU 1/2" OMP/OMR SEALING CAP	60	300	£89.77
V0505/P	VAU 3/4" OMT SEALING CAP	100	300	£105.24
V0490/SF	VAU 1/2" OMS SF/ BRAKE UNCLAPING	50	300	£87.68
V0500/SF	VAU 1/2" OMP/OMR SF/ BRAKE UNCLAPING	60	300	£89.44
V0505/SF	VAU 3/4" OMT SF/ BRAKE UNCLAPING	100	300	£104.98
NB. BRACE UNCLAPING MEANS " A MECHANICAL FAIL SAFE BRAKE "				

SPRINGS

SETTING RANGE BAR	PRESSURE INCREASE (BAR/TURN)	STANDARD SETTING BAR
10 - 50*	7	30
20 - 100	12	75
10 - 180 (Standard)	30	90
50 - 250	45	130
80 - 300	50	150
* = For setting less than 70 Bar Q = 12 l/m		

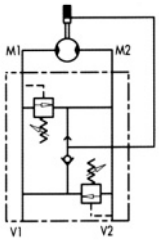

DUAL CROSS RELIEF VALVE FLANGEABLE ON SAMHYDRAULIK MOTORS AG - AR

USE AND OPERATION

Made up by 2 relief valves with crossed tank, this valve is used to block pressure to a certain setting in the 2 ports of an actuator/hydraulic motor. It's ideal to provide protection against sudden shock pressures and to adjust different pressures in the 2 ports of an hydraulic circuit as well. Direct flange is ideal for Samhydraulic motors type AG - AR and provides a maximum safety, very low pressure drops and solid installation.

Body: Zinc-plated steel **Internal parts**: Hardened and ground steel, **Seals**: Buna N standard, **Poppet type**: minor leakage

Applications: Flange M1 and M2 directly to the motor and connect V1 and V2 to pressure flow.

ON REQUEST: DIFFERENT SETTING RANGE AVAILABLE (SEE TABLE BELOW) OTHER SETTINGS AVAILABLE (CODE/T: PLEASE SPECIFY THE DESIRED SETTING). BRAKE UNCLAPING (CODE/ SF)

CODE	TYPE	MAX FLOW L/MIN	MAX PRESSURE BAR	PRICE
V0455	VAU 1/" AG - AR	60	300	£81.58
V0455/T	VAU 1/" AG - AR PRESSURE PRESET	60	300	£85.28
V0455/V	VAU 1/" AG - AR HANDKNOB	60	300	£89.06
V0455/P	VAU 1/" AG - AR SEALING CAP	60	300	£90.97
V0455/SF	VAU 1/" AG - AR SF/ BRAKE UNCLAPING	60	300	£90.97
BRACE UNCLAPING MEANS " A MECHANICAL FAIL SAFE BRAKE "				

SPRINGS

SETTING RANGE BAR	PRESSURE INCREASE (BAR/TURN)	STANDARD SETTING BAR
10 - 50*	7	30
20 - 100	12	75
10 - 180 (Standard)	30	90
50 - 250	45	130
80 - 300	50	150
* = For setting less than 70 Bar Q = 12 l/m		

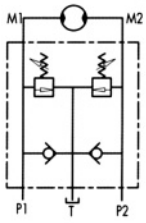

DUAL CROSS RELIEF VALVES WITH ANTI-CAVITATION

USE AND OPERATION

This valve is used to block pressure to a certain setting in the 2 ports of an hydraulic motor: when it reaches pressure setting, the valve opens allowing pressure relief in T. The relief valve provides overload protection in a fast and accurate way and Cavitation is avoided thanks to the check valve.

Body: Zinc-plated steel (VAUAC 1/2") and Aluminium VAUAC 3/4" **Internal parts**: Hardened and ground steel, **Seals**: Buna N standard, Poppet type: minor leakage

Applications: Flange M1 and M2 directly to the motor and connect P1 and P2 to pressure flow. Connect T to the tank. Mounting by the actuator is highly recommended in order to avoid pressure drops and get prompt duty.

ON REQUEST: DIFFERENT SETTING RANGE AVAILABLE (SEE TABLE BELOW) OTHER SETTINGS AVAILABLE (CODE/T: PLEASE SPECIFY THE DESIRED SETTING).

CODE	TYPE	MAX FLOW L/MIN	MAX PRESSURE BAR	PRICE
V0508	VAUAC 1/2"	70	300	£191.31
V0510	VAUAC 3/4"	110	300	£297.80
V0508/T	VAUAC 1/2" PRESSURE PRESET	70	300	£195.07
V0510/T	VAUAC 3/4" PRESSURE PRESET	110	300	£300.51
V0508/V	VAUAC 1/2" HANDKNOB	70	300	£198.86
V0510/V	VAUAC 3/4" HANDKNOB	110	300	£189.82
V0508/P	VAUAC 1/2" SEALING CAP	70	300	£200.74
V0510/P	VAUAC 3/4" SEALING CAP	110	300	£306.20

SPRINGS

SETTING RANGE BAR	PRESSURE INCREASE (BAR/TURN) Q = 4 l/m	STANDARD SETTING BAR
10 - 180 Standard	30	90
80 - 300	50	150
For VAUAC 3/4"		
20 - 200	40	160
50 - 400 Standard	80	180

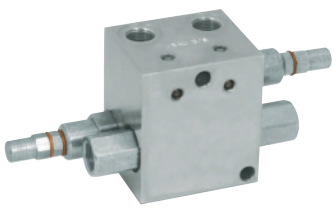

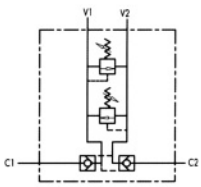

DUAL CROSS RELIEF VALVES WITH PILOT CHECK VALVE

USE AND OPERATION

Made up by 1 double pilot check valve together with one double cross relief valve, this valve enables to block the actuator in one position and to limit inlet pressure to the actuator.

Body: Zinc-plated steel **Internal parts**: Hardened and ground steel, **Seals**: Buna N standard, **Poppet type**: minor leakage

Applications: Connect V1 and V2 to the pressure flow and C1 and C2 to the actuator.

ON REQUEST: OTHER SETTINGS AVAILABLE (CODE/T: PLEASE SPECIFY THE DESIRED SETTING)

CODE	TYPE	MAX FLOW L/MIN	MAX PRESSURE BAR	PRICE
V444	VBAU 3/8"	35	180	£150.80
V444/T	VBAU 3/8" PRESSURE PRESET	35	180	£154.58
V444/V	VBAU 3/8" HANDKNOB	35	180	£158.61
V444/P	VBAU 3/8" SEALING CAP	35	180	£160.53

CHECK VALVES

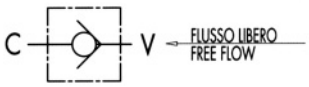

CHECK VALVES

USE AND OPERATION

In the check valve flow is free in one direction and blocked in the reverse one.
Body: Zinc-plated steel **Internal parts**: Hardened and ground steel, **Seals**: Buna N standard, **Poppet type**: No leakage
Applications: Connect V to the pressure flow and C to the actuator. Flow is free from V to C and blocked in the reverse direction.
ON REQUEST: DIFFERENT CRACKING PRESSURES: 1-3-5-8 BAR (PLEASE SPECIFY THE DESIRED CRACKING PRESSURE IN THE PRODUCT DESCRIPTION). SET VALVE IS USED TO KEEP A HYDRAULIC SYSTEM UNDER PRESSURE.

CODE	TYPE	MAX FLOW L/MIN	MAX PRESSURE BAR	CRACKING PRESSURE BAR	PRICE
V0592	VU 1/8"	3	350	+- 0.4 / 0.7	£17.53
V0590	VU 1/4"	20	350	+- 0.4 / 0.7	£8.42
V0600	VU 3/8"	45	350	+- 0.4 / 0.7	£9.01
V0610	VU 1/2"	70	350	+- 0.4 / 0.7	£12.50
V0620	VU 3/4"	110	350	+- 0.4 / 0.7	£18.39
V0630	VU 1"	160	350	+- 0.4 / 0.7	£21.75
V0631	VU 1 1/4"	200	350	+- 0.4 / 0.7	£54.86
V0632	VU 1 1/2"	300	350	+- 0.4 / 0.7	£80.09

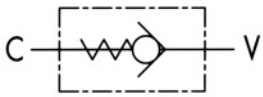

INTEGRATED CHECK VALVES

USE AND OPERATION

In the check valve flow is free in one direction and blocked in the reverse one. Small dimensions and their insert configuration makes these valves ideal for installation into custom designed hydraulic integrated circuit.
Body: Zinc-plated steel. **Exterior Tightness:** Through O-Ring seal.
Applications: Screw the valve keeping into consideration that flow is free from V to C.

CODE	TYPE	MAX FLOW L/MIN	MAX PRESSURE BAR	CRACKING PRESSURE BAR	PRICE
V0591	VUI 1/4"	20	350	0.5	`£17.16
V0601	VUI 3/8"	30	350	0.5	£19.50
V0611	VUI 1/2"	50	350	0.5	£24.77
V0621	VUI 3/4"	80	350	0.5	£29.21

HOSE BURST VALVES

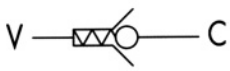

HOSE BURST VALVES CARTRIDGE

USE AND OPERATION

These valves are used to prevent uncontrolled decent of a load in case of hose failure.
When it exceeds the setting (reaction flow), the valve blocks the flow.
Body: Steel, burnished.
Applications: Screw in the valve connecting V to the pressure flow and C to the actuator. Being used with a flow control valve is recommended. system). Hole on the flat (CODE/F, please specify the hole dimension) for a slow load decent with closed valve. Also available with male-female or female-female body for inline mounting.

CODE	TYPE	MAX FLOW L/MIN	MAX PRESSURE BAR	PRICE
V0770	VUBA 1/4"	25	350	£7.13
V0780	VUBA 3/8"	50	350	£7.13
V0790	VUBA 1/2"	80	350	£7.13
V0800	VUBA 3/4"	140	350	£10.82
V0810	VUBA 1"	180	350	£20.22
V0770/F	VUBA 1/4" WITH HOLE	25	350	£14.43
V0780/F	VUBA 3/8" WITH HOLE	50	350	£14.82
V0790/F	VUBA 1/2" WITH HOLE	80	350	£17.12
V0800/F	VUBA 3/4" WITH HOLE	140	350	£21.65
V0810/F	VUBA 1" WITH HOLE	180	350	£32.62

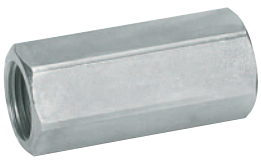

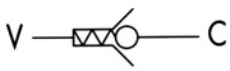

HOSE BURST VALVES CARTRIDGE WITH FEMALE/FEMALE THREADED BODY

CODE	TYPE	MAX FLOW L/MIN	MAX PRESSURE BAR	PRICE
V0771	VUBA 1/4" MFF	25	350	£11.08
V0781	VUBA 3/8" MFF	50	350	£11.25
V0791	VUBA 1/2" MFF	80	350	£13.37
V0801	VUBA 3/4" MFF	140	350	£19.13
V0811	VUBA 1" MFF	180	350	£37.93
V0771/F	VUBA 1/4" MFF/ WITH HOLE	25	350	£18.57
V0781/F	VUBA 3/8" MFF/ WITH HOLE	50	350	£19.80
V0791/F	VUBA 1/2" MFF/ WITH HOLE	80	350	£24.52
V0801/F	VUBA 3/4" MFF/ WITH HOLE	140	350	£29.52
V0811/F	VUBA 1" MFF/ WITH HOLE	180	350	£44.02

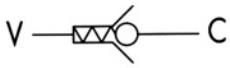

HOSE BURST VALVES CARTRIDGE WITH MALE/FEMALE THREADED BODY

CODE	TYPE	MAX FLOW L/MIN	MAX PRESSURE BAR	PRICE
V0772	VUBA 1/4" MMF	25	350	£10.46
V0782	VUBA 3/8" MMF	50	350	£10.62
V0792	VUBA 1/2" MMF	80	350	£12.62
V0802	VUBA 3/4" MMF	140	350	£17.90
V0812	VUBA 1" MMF	180	350	£35.82
V0772/F	VUBA 1/4" MMF/ WITH HOLE			£18.57
V0782/F	VUBA 3/8" MMF/ WITH HOLE			£19.80
V0792/F	VUBA 1/2" MMF/ WITH HOLE			£23.16
V0802/F	VUBA 3/4" MMF/ WITH HOLE			£27.87
V0812/F	VUBA 1" MMF/ WITH HOLE			£41.57

MMF

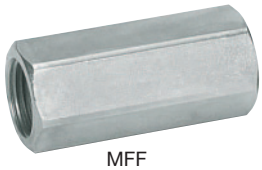

MFF

BODY ONLY - MALE/FEMALE OR FEMALE/FEMALE

CODE	TYPE	PRICE
MFF 1/4"	BODY FEMALE/FEMALE 1/4"	£3.90
MFF 3/8"	BODY FEMALE/FEMALE 3/8"	£4.71
MFF 1/2"	BODY FEMALE/FEMALE 1/2"	£7.06
MFF 3/4"	BODY FEMALE/FEMALE 3/4"	£7.43
MFF 1"	BODY FEMALE/FEMALE 1"	£10.77
MMF 1/4"	BODY MALE/FEMALE 1/4"	£3.90
MMF 3/8"	BODY MALE/FEMALE 3/8"	£4.71
MMF 1/2"	BODY MALE/FEMALE 1/2"	£7.06
MMF 3/4"	BODY MALE/FEMALE 3/4"	£7.43
MMF 1"	BODY MALE/FEMALE 1"	£10.77

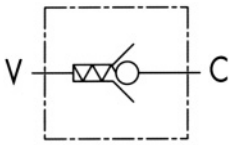

HOSE BURST VALVE WITH EXTERNAL ADJUSTMENT

USE AND OPERATION

These valves are used to prevent uncontrolled decent of a load in case of hose failure. When it exceeds the setting (reaction flow), the valve blocks the flow. Unlike the standard hose burst valve, it enables external flow adjustment through the knob. **Body:** Zinc-plated steel. **Internal Components:** Hardened and ground steel. **Tightness:** Ball type. **Applications:** Connect V to the pressure flow and C to the actuator. To adjust flow (1 turn = 15 litre), keep the nut on the valve to prevent oil leakage.

CODE	TYPE	MAX FLOW L/MIN	MAX PRESSURE BAR	PRICE
V0785	VUB 3/8"	40	300	£25.02
V0795	VUB 1/2"	70	300	£26.01

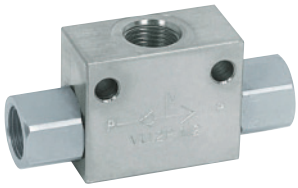

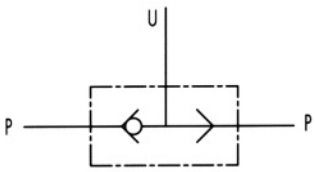

SHUTTLE VALVES

USE AND OPERATION

This valve is used to select higher pressure between two pressure lines. **Body:** Zinc-plated steel. **Seal:** BUNA N. **Tightness:** Ball type. **Applications:** Connect ports P to the 2 lines to select and U to the line to feed.

CODE	TYPE	MAX FLOW L/MIN	MAX PRESSURE BAR	PRICE
V0666	VU2P 1/4"	30	450	£19.64
V0668	VU2P 3/8"	45	450	£21.87
V0670	VU2P 1/2"	70	450	£25.31
V0680	VU2P 3/4"	110	350	£51.06
V0685	VU2P 1"	150	300	£124.82

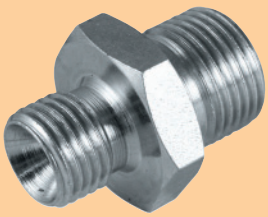

FLOWFIT

SEE OUR HYDRAULIC ADAPTOR SECTION FOR A FULL RANGE OF ADAPTOR SOLUTIONS.

BARREL FLOW CONTROL VALVES WITH CHECK

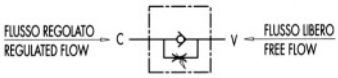

USE AND OPERATION This valve is used to adjust flow speed of actuators in one direction; flow is free in reverse one. As pressure compensation is not provided, flow adjustment depends on pressure and oil viscosity.
Body: Zinc-plated steel **Internal parts**: Hardened and ground steel, **Seals**: Buna N standard, **Tightness:** By diameter combination. Minor leakage with closed valve.
Applications: Connect V to the pressure flow and C to the actuator to set. The flow is adjusted from C to V and free in the reverse direction. When used on actuator with double pilot check valve, VRF has to be mounted between the actuator and the double pilot check valve. Flow adjustment is made by rotating the coupling: by clockwise rotation flow increases and vice versa. Once the flow has been set, lock the nut in order to keep the desired settings, even case of vibrations.

CODE	TYPE	MAX FLOW L/MIN	MAX PRESSURE BAR	CRACKING PRESSURE BAR	PRICE
V0540	VRF 1/4"	20	300	0.5	£24.53
V0550	VRF 3/8"	45	300	0.5	£27.72
V0560	VRF 1/2"	70	300	0.5	£35.47
V0570	VRF 3/4"	110	250	0.5	£51.69
V0580	VRF 1"	160	250	0.5	£78.13

BARREL FLOW CONTROL VALVES NO CHECK

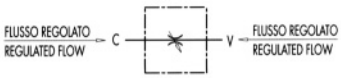

USE AND OPERATION This valve is used to adjust flow speed of actuators in both directions. As pressure compensation is not provided, flow adjustment depends on pressure and oil viscosity.
Body: Zinc-plated steel **Internal parts**: Hardened and ground steel, **Seals**: Buna N standard, **Tightness:** By diameter combination. Minor leakage with closed valve.
Applications: Connect V to the pressure flow and C to the actuator to set; when used on an actuator with double pilot check, VRB has to be mounted between the actuator and the double pilot check valve. Flow adjustment is made by rotating the coupling: by clockwise rotation flow increases and vice versa. Once the flow has been set, lock the nut in order to keep the desired settings even in case of vibrations.

CODE	TYPE	MAX FLOW L/MIN	MAX PRESSURE BAR	PRICE
V0545	VRB 1/4"	20	300	£21.48
V0555	VRB 3/8"	45	300	£22.38
V0565	VRB 1/2"	70	300	£26.70
V0575	VRB 3/4"	110	250	£53.22
V0585	VRB 1"	160	250	£94.75

FIXED SETTING THROTTLE CHECK VALVES

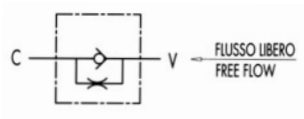

USE AND OPERATION Flow is free in one direction and fixed in the reverse one. Flow is fixed as flow adjustment depends on the throttling hole diameter.
Body: Zinc-plated steel **Internal parts**: Hardened and ground steel, **Seals**: Buna N standard, **Poppet type:** Standard
Applications: Connect V to the pressure flow and C to the actuator. Flow is free from V to C and fixed in the reverse one. Throttling is obtained through one or two calibrated holes, the diameter of which has to be specified in the order.
On Request: Other settings available: 1-3-5-8 Bar (please specify in the description the desired setting).

CODE	TYPE	MAX FLOW L/MIN	MAX PRESSURE BAR	CRACKING PRESSURE BAR	PRICE
V0590/1F	VUSF 1/4" WITH 1 HOLE	20	350	+- 0.4 / 0.7	£10.21
V0600/1F	VUSF 3/8" WITH 1 HOLE	45	350	+- 0.4 / 0.7	£11.06
V0610/1F	VUSF 1/2" WITH 1 HOLE	70	350	+- 0.4 / 0.7	£14.90
V0620/1F	VUSF 3/4" WITH 1 HOLE	110	350	+- 0.4 / 0.7	£21.52
V0630/1F	VUSF 1" WITH 1 HOLE	160	350	+- 0.4 / 0.7	£25.18
V0631/1F	VUSF 1 1/4" WITH 1 HOLE	200	350	1	£87.27
V0632/1F	VUSF 1 1/2" WITH 1 HOLE	300	350	1	£117.51
V0590/2F	VUSF 1/4" WITH 2 HOLES	20	350	+- 0.4 / 0.7	£10.48
V0600/2F	VUSF 3/8" WITH 2 HOLES	45	350	+- 0.4 / 0.7	£11.44
V0610/2F	VUSF 1/2" WITH 2 HOLES	70	350	+- 0.4 / 0.7	£15.21
V0620/2F	VUSF 3/4" WITH 2 HOLES	110	350	+- 0.4 / 0.7	£22.12
V0630/2F	VUSF 1" WITH 2 HOLES	160	350	+- 0.4 / 0.7	£25.99
V0631/2F	VUSF 1 1/4" WITH 2 HOLES	200	350	1	£89.82
V0632/2F	VUSF 1 1/2" WITH 2 HOLES	300	350	1	£120.96

90° PRESSURE COMPENSATED 90° FLOW REGULATOR VALVES

USE AND OPERATION This valve is used to adjust flow speed of actuators in one direction; flow is free in the reverse one. The internal compensation system allows to keep a constant speed even when the load varies. High adjustment sensitivity.
Body: Zinc-plated steel **Internal parts**: Hardened and ground steel, **Seals**: Buna N standard, **Tightness:** Needle type
Applications: Connect A to the pressure flow and B to the actuator to set; flow is adjusted from B to A and is free in the reverse direction. Flow adjustment is made by rotating the plastic hand knob after loosening the side locking screw. This particular configuration allows an accurate and sensitive adjustment.

CODE	TYPE	BSP PORTS	MAX FLOW FROM A TO B L/MIN	MAX FLOW FROM B TO A L/MIN	MAX PRESSURE BAR	PRICE
V0581/C	VRFU 90° 1/4" PCFCV	1/4"	15	25	250	£78.13
V0582/C	VRFU 90° 3/8" PCFCV	3/8"	15	25	250	£79.33
V0583/C	VRFU 90° 1/2" PCFCV	1/2"	30	45	250	£120.20

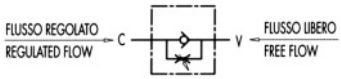

FLOW REGULATOR VALVES WITH CHECK

USE AND OPERATION

This valve is used to adjust flow speed of actuators in one direction; flow is free in the reverse one. As pressure compensation is not provided, flow adjustment depends on pressure and fluid viscosity. High adjustment sensitivity.
Body: Zinc-plated steel **Internal parts**: Hardened and ground steel, **Seals**: Buna N standard, **Tightness:** Needle type, Minor leakage with closed valve.
Applications: Connect V to the pressure flow and C to the actuator to set; flow is adjusted from C to V and is free in the reverse direction. When used on actuator with double pilot check valve, VRFU has to be mounted between the actuator and the double pilot check valve. Flow adjustment is made by rotating the aluminium hand knob after loosening the side locking screw. This configuration allows an accurate and sensitive adjustment.

CODE	TYPE	MAX FLOW L/MIN	MAX PRESSURE BAR	CRACKING PRESSURE BAR	PRICE
V0581	VRFU 1/4"	15	350	0.5	£34.64
V0582	VRFU 3/8"	30	350	0.5	£38.80
V0583	VRFU 1/2"	50	350	0.5	£48.73
V0588	VRFU 3/4"	60	280	0.5	£88.44
V0576	VRFU 1"	80	250	0.5	£144.04

CODE	DESCRIPTION	PRICE
DAD090	Locking Nut to suit V0581/V0582/V0583	£3.59

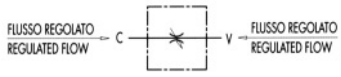

FLOW CONTROL VALVES WITHOUT CHECK

USE AND OPERATION

This valve is used to adjust flow speed of actuators in both directions. As pressure compensation is not provided, flow adjustment depends on pressure and fluid viscosity. High adjustment sensitivity.
Body: Zinc-plated steel **Internal parts**: Hardened and ground steel, **Seals**: Buna N standard, **Tightness:** Needle type, Minor leakage with closed valve.
Applications: Connect a port to the pressure. Flow will be adjusted in the other one. When used on actuator with double pilot check valve, VRFB has to be mounted between the actuator and the double pilot check valve. Flow adjustment is made by rotating the aluminium hand knob after loosening the side locking screw. This particular configuration allows an accurate and sensitive adjustment.

CODE	TYPE	MAX FLOW L/MIN	MAX PRESSURE BAR	PRICE
V0584	VRFB 1/4"	15	350	£26.34
V0586	VRFB 3/8"	30	350	£35.36
V0587	VRFB 1/2"	50	350	£38.18
V0589	VRFB 3/4"	80	280	£72.20
V0577	VRFB 1"	80	250	£151.13

CODE	DESCRIPTION	PRICE
DAD090	Locking Nut to suit V0584/86/87/89	£3.59

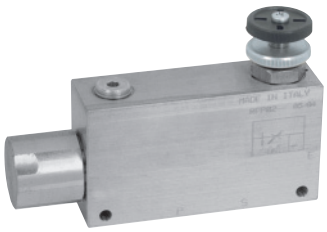

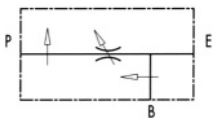

3 PORT FLOW CONTROL VALVE WITH ONGOING PRESSURE LINE

USE AND OPERATION

This valve enables to keep “P” flow constant to a certain setting, independently of the required pressure or the inlet flow of the valve. Exceeded flow is drained in “B” and it is available for a second use. Also port “B” is insensitive to pressure changes, but not to flow changes. **Body**: Zinc-plated steel **Internal parts**: Hardened and ground steel, **Seals**: Buna N standard, **Tightness:** By diameter combination. Minor leakage (few drops per minute) is needed. Connect B to the tank or to a second actuator. To adjust inlet pressure in P screw in or out, hand wheel, after loosening the locknut.

CODE	TYPE	MAX FLOW L/MIN	MAX ADJUSTED FLOW	MAX PRESSURE BAR	PRICE
V1060	VRP3 3/8"	50	40	250	£151.45
V1070	VRP3 1/2"	85	60	250	£152.78
V1080	VPR 3/4"	150	90	210	£264.45
V1090	VPR 1"	250	150	210	£322.14

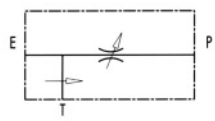

3 PORT FLOW CONTROL VALVE WITH EXCESS BACK TO TANK

USE AND OPERATION

This valve enables to keep “P” flow constant to a certain setting, independently of the required pressure or the inlet flow of the valve. Exceeded flow is drained directly in T (tank).
Body: Zinc-plated steel **Internal parts**: Hardened and ground steel, **Seals**: Buna N standard, **Tightness:** By diameter combination. Minor leakage (few drops per minute)
Applications: Connect E to the pressure and P to the line where flow adjustment is needed.. Connect T to the tank. To adjust inlet pressure in P screw in or out, hand wheel, after loosening the locknut.

CODE	TYPE	MAX FLOW L/MIN	MAX ADJUSTED FLOW	MAX PRESSURE BAR	PRICE
V1110	RFP3 3/8"	50	30	250	£133.83
V1120	RFP 1/2"	85	50	250	£141.29
V9999	VCF.BC.3/2A06B	150	90	210	£301.41

50% OFF ALL PRICES

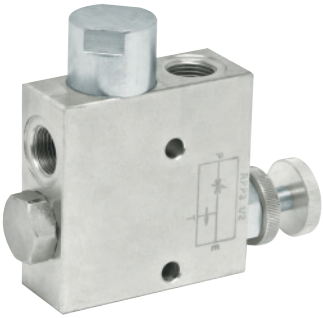

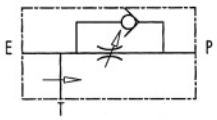

3 PORT FLOW CONTROL VALVE WITH EXCESS TO TANK WITH CHECK VALVE

USE AND OPERATION

This valve enables to keep “P” flow constant to a certain setting, independently of the required pressure or the inlet flow of the valve. Exceeded flow is drained directly in T (tank). The check valve allows those applications where we require the return of the free flow.

Body: Zinc-plated steel **Internal parts**: Hardened and ground steel, **Seals**: Buna N standard, **Tightness:** By diameter combination. Minor leakage (few drops per minute)

Applications: Connect E to the pressure and P to the line where flow adjustment is needed. Connect T to the tank. To adjust inlet pressure in P screw in or out, hand wheel, after loosening the locknut.

CODE	TYPE	BSP PORTS	MAX INLET FLOW L/MIN	MAX ADJUSTED FLOW L/MIN	MAX PRESSURE BAR	PRICE
V1110/VU	RFP3 3/8" c/VU	3/8"	50	30	350	£164.81
V1120/VU	RFP3 1/2" c/VU	1/2"	85	50	350	£166.11

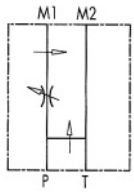

3 PORT FLOW CONTROL VALVE EXCESS TO TANK FLANGEABLE ON DANFOSS MOTORS OMP/OMR

USE AND OPERATION

This valve enables to keep "P" flow constant to a certian setting, independently of the required pressure or the inlet flow of the valve. Exceeded flow is drained directly in T (tank).

Body: zinc-plated steel

Internal parts: Hardened and ground steel

Seals: Buna N standard

Tightness: By diameter combination. Minor leakage (few drops per minute)

Applications: Connect M1 and M2 to the motor and P and T to the pressure.

PART NO.	TYPE	BSP PORTS	MAX INLET FLOW	MAX ADJUSTED FLOW	MAX PRESSURE (BAR)	PRICE
V1121	RFP3 1/2" OMP/OMR	1/2"	50 L/MIN	30 L/MIN	350	£149.74

2 WAY FLOW DIVIDERS

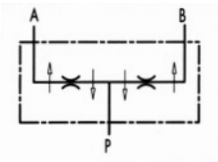

2 WAY FLOW DIVIDER

USE AND OPERATION

These valves allow the division of inlet flow into two equal parts (50/50) and they unify in the reverse direction, independently of ant pressure changes and flow. These valves are used when two equal actuators, that are not mechanically coupled, supplied by the same pump and controlled by a single distributor, must move simultaneously both at input and output.

Body: cast iron / steel. **Internal Parts:** Hardened and ground steel. **Seals:** BUNA N standard and Teflon.

Tightness: By diameter combination. Cylinder stroke error tolerance of 2%. Any synchronisation differences are compensated by the terminal position of the stroke.

Applications: Connect P to the pressure flow and A and B to the actuators.

CODE	TYPE	PORTS	MIN. FLOW * L/MIN	MAX. FLOW * L/MIN	WORKING PRESS. BAR	PEAK PRESS. BAR	PRICE
V1001	V-EQ 8	3/8"	1	3	250	300	£249.27
V1000	V-EQ 10	3/8"	3	6	250	300	£231.20
V1002	V-EQ 15	3/8"	6	10	250	300	£231.20
V1003	V-EQ 20	3/8"	10	20	250	300	£231.20
V1004	V-EQ 22	3/8"	20	32	250	300	£231.20
V1005	V-EQ 25	1/2"	25	40	250	300	£234.25
V1006	V-EQ 30	1/2"	40	60	250	300	£234.25
V1007	V-EQ 50	1/2"	60	80	250	300	£249.27
* = Capacity values refers to input P							

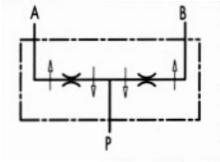

STEEL FLOW DIVIDERS

USE AND OPERATION

These valves allow the division of inlet flow into two equal parts (50/50) and they unify in the reverse direction, irrespective of any pressure differences and flow. These valves are used when two equal actuators, that are not mechanically coupled, supplied by the same pump and controlled by a single distributor, must move simultaneously both at input and output.

Body: Zinc plated steel. **Internal Parts:** Hardened and ground steel. **Seals:** BUNA N standard and Teflon.

Tightness: By diameter combination. Minor leakage

Applications: Connect P to the pressure flow and A and B to the actuators.

CODE	TYPE	BSP PORTS		MIN FLOW L/MIN	WORKING PRESSURE BAR	PEAK PRESSURE BAR	PRICE
		P	A+B				
V1022	DFL6-10	3/8"	3/8"	10	250	300	£176.70
V1023	DFL10-20	3/8"	3/8"	20	250	300	£176.70
V1025	DFL25-40	1/2"	3/8"	40	250	300	£176.70

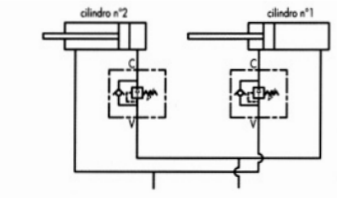

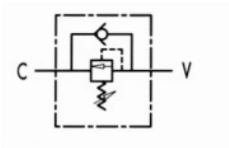

DIRECT ACTING SEQUENCE VALVES

USE AND OPERATION

Sequence valve is used to feed 2 cylinders in sequence: it provides flow to the secondary circuit when a primary circuit function has been completed reaching the pressure setting. Return flow is free. It's ideal for circuit with low pressure on the secondary actuator as the pressure adds to it.

Body: Zinc-plated steel **Internal parts**: Hardened and ground steel, **Seals**: Buna N standard, **Tightness:** Minor leakage.

Applications: For use with 2 actuators, follow the mounting instructions indicated in the scheme. For different uses, mount the valve keeping consideration that, when the valve reaches the setting pressure, the flow goes from **V** towards **C**, whilst flow is free from **C** to **V**.

ON REQUEST: DIFFERENT SETTING RANGE (SEE THE TABLE). OTHER SETTINGS AVAILABLE (CODE/T: PLEASE SPECIFY THE DESIRED SETTING)

CODE	TYPE	MAX FLOW L/MIN	MAX PRESSURE BAR	PRICE
V0640	VS2C 3/8"	35	350	£60.45
V0660	VS2C 1/2"	70	350	£60.45
V0665	VS2C 3/4"	110	350	£142.14
V0640/T	VS2C 3/8" PRESSURE PRESET	35	350	£56.48
V0660/T	VS2C 1/2" PRESSURE PRESET	70	350	£67.66
V0665/T	VS2C 3/4" PRESSURE PRESET	110	350	£144.02
V0640/V	VS2C 3/8" HANDKNOB	35	350	£58.37
V0660/V	VS2C 1/2" HANDKNOB	70	350	£69.68
V0665/V	VS2C 3/4" HANDKNOB	110	350	£145.93
V0640/P	VS2C 3/8" SEALING CAP	35	350	£59.33
V0660/P	VS2C 1/2" SEALING CAP	70	350	£70.63
V0665/P	VS2C 3/4" SEALING CAP	110	350	£146.86

SPRINGS

SETTING RANGE BAR	PRESSURE INCREASE (BAR/TURN) Q = 4 l/m	STANDARD SETTING BAR
10 - 50*	7	30
20 - 100	12	75
10 - 180 (Standard)	30	90
50 - 250	45	130
80 - 300	50	150

SETTING RANGE BAR	PRESSURE INCREASE (BAR/TURN) Q = 4 l/m	STANDARD SETTING BAR
20-200	40	160
50-400 (Standard)	80	180

KOMPASS®

SEE KOMPASS VALVE SECTION FOR MORE SEQUENCE VALVE OPTIONS.

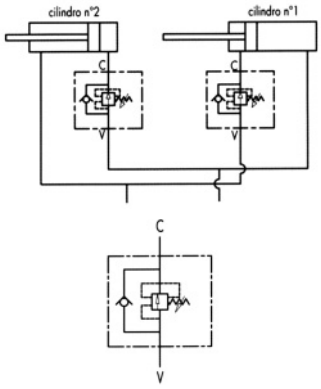

SEQUENCE VALVES

USE AND OPERATION

Sequence valve is used to feed 2 cylinders in sequence: it provides flow to the secondary circuit when a primary circuit function has been completed reaching the pressure setting. Return flow is free.
Being insensitive to back pressures, it allows to use the circuit pressure to control both the actuators.
Body: Zinc-plated steel **Internal parts**: Hardened and ground steel, **Seals**: Buna N standard, **Tightness:** Minor leakage.
Applications: For use with 2 actuators, follow the mounting instructions indicated in the scheme. For different uses, mount the valve keeping consideration that, when the valve reaches the setting pressure, the flow goes from **V** towards **C**, whilst flow is free from **C** to **V**.
ON REQUEST: DIFFERENT SETTING RANGE (SEE THE TABLE). OTHER SETTINGS AVAILABLE (CODE/T: PLEASE SPECIFY THE DESIRED SETTING)

CODE	TYPE	MAX FLOW L/MIN	MAX PRESSURE BAR	PRICE
V0642	VSQAPP 3/8"	35	250	£76.70
V0662	VSQAPP 1/2"	70	250	£89.34
V0642/T	VSQAPP 3/8" PRESSURE PRESET	35	250	£78.77
V0662/T	VSQAPP 1/2" PRESSURE PRESET	70	250	£91.47
V0642/V	VSQAPP 3/8" HANDKNOB	35	250	£80.73
V0662/V	VSQAPP 1/2" HANDKNOB	70	250	£93.43
V0642/P	VSQAPP 3/8" SEALING CAP	35	250	£81.74
V0662/P	VSQAPP 1/2" SEALING CAP	70	250	£94.36

SPRINGS

SETTING RANGE BAR	PRESSURE INCREASE (BAR/TURN) Q = 4 l/m	STANDARD SETTING BAR
10 - 50*	7	30
20 - 100	12	75
10 - 180 (Standard)	30	90
50 - 250	45	130
80 - 300	50	150
* = For setting less than 70 Bar Q = 12 l/m		

TWO PUMP "HI-LOW" UNLOADING VALVES

FLOWFIT

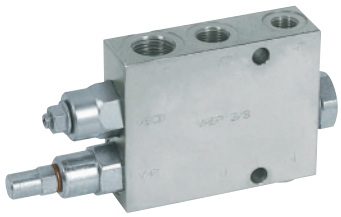

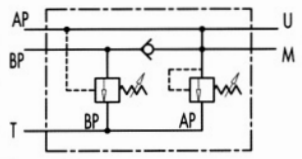

TWO PUMP "HI - LOW" UNLOADING VALVES

USE AND OPERATION

This valve is used in a 2 parallel-working pumps circuit in order to release the excess of the higher flow pump to the tank when this gets the required pressure setting. Since this moment and on, the actuator works with the lower flow pump at higher pressure, consuming less energy.
Body: Zinc-plated steel **Internal parts**: Hardened and ground steel, **Seals**: Buna N standard, **Tightness:** Minor leakage.
Applications: Connect BP to the higher flow pump, AP to the lower flow pump, T to the tank, M to the eventual manometer and U as for necessity.

CODE	TYPE	MAX FLOW L/MIN			MAX PRESSURE BAR	PRICE
		AP	BP	T		
V0512	VABP 3/8"	15	30	40	350	£196.20
V0513	VABP 1/2"	25	45	65	350	£270.73
V0514	VABP 3/4"	30	80	100	350	£279.74

SPRINGS

STANDARD SPRINGS		
VALVE	BP (BAR)	AP (BAR)
VABP 3/8"	20-120	50-350
VABP 1/2"	20-120	50-350
VABP 3/4"	20-100	50-330

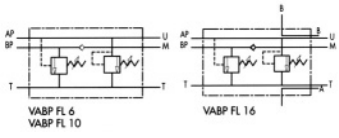

TWO PUMP "HI-LOW" UNLOADING VALVES FLANGEABLE (BASE NG6-NG10 AND NG16

USE AND OPERATION

This valve is used in a 2 parallel-working pumps circuit in order to release the excess of the higher flow pumps to the tank when this gets the required pressure setting. Since this moment and on, the actuator works with the lower flow pumps at higher pressure, consuming less energy. It is ideal for direct flange-mounting on solenoid valves.
Body: Zinc-plated steel **Internal parts**: Hardened and ground steel, **Seals**: Buna N standard, **Tightness:** Minor leakage.
Applications: Fix the valve to the pressure flow by connecting BP to the higher flow pumps, AP to the lower flow pumps, T to the tank and M to the eventual manometer. Flange the solenoid valve to the VABP and connect A and B to the actuator.
SEE POWERUNITS SECTION ON PAGE 23 – DOUBLE PUMP WITH HI-LOW VALVES BUILT UP

CODE	TYPE	MAX FLOW L/MIN			MAX PRESSURE BAR	PRICE
		AP	BP	T		
V0518	VABP FL 6 NG6	15	30	40	350	£293.75
V0515	VABP FL 10 NG10	20	45	60	350	£324.87
V0516	VABP FL 16 NG16	35	80	100	350	£631.72

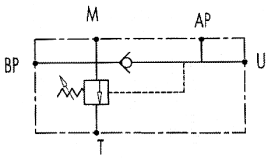

TWO PUMP "HI-LOW" UNLOADING VALVES FLANGEABLE ON LOW-PRESSURE PUMP

USE AND OPERATION This valve is used in a 2 parallel-working pumps circuit in order to release the excess of the higher flow pump to tank when this gets the required pressure setting. Since this moment and on the actuator works with the lower flow pumps at higher pressure, consuming less energy. This valve is designed for direct flanging on lower flow pump. To adjust the high pressure, you have to mount an inline relief valve.
Body: Zinc-plated steel **Internal parts**: Hardened and ground steel, **Seals**: Buna N standard, **Tightness:** Minor leakage.
Applications: Connect BP to the higher flow pump, AP to the lower flow pump, T to the tank, M to the eventual manometer and U as for necessity.

CODE	TYPE	BSP PORTS	MAX FLOW L/MIN			MAX PRESSURE		MAX PRESSURE BAR	WEIGHT	PRICE
			AP	BP	T	AP	BP			
V0517	VEP FLP 1/2"	1/2"	15	45	55	350	80	350	2.5	£121.97

HIGH PRESSURE BALL VALVES

FLOWFIT

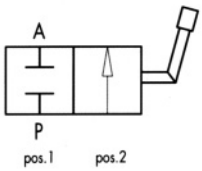

2 WAY BALL VALVES

USE AND OPERATION These valves are used to open or close oil flow in a circuit even with maximum pressure.
Body: Zinc-plated steel **Internal parts**: Hardened and ground steel, **Seals**: Buna N standard and POM seals, **Tightness:** No leakage.
Applications: Connect either A or P to the ports where flow has to be blocked. Flow is blocked with lever at 90 deg (position 1) and free with lever in line (position 2). **ON REQUEST:** FIXING HOLES (CODE / FF).

CODE	TYPE	MAX FLOW L/MIN	MAX PRESSURE BAR	PRICE
	DIN/ISO 228 BSP FEMALE CONNECTION			
V0830	RS 2 VIE 1/4"	25	500	£15.93
V0840	RS 2 VIE 3/8"	35	500	£18.40
V0850	RS 2 VIE 1/2"	60	500	£20.18
V0860	RS 2 VIE 3/4"	100	400	£51.49
V0870	RS 2 VIE 1"	180	350	£64.66
V0871	RS 2 VIE 1 1/4"	180	350	£64.60
V0874	RS 2 VIE 1 1/2"	180	350	£69.74

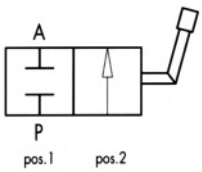

2 WAY BALL VALVES WITH FIXING HOLES

CODE	TYPE	MAX FLOW L/MIN	MAX PRESSURE BAR	PRICE
V0830/FF	RS 2 VIE 1/4" FF	25	500	£25.77
V0840/FF	RS 2 VIE 3/8" FF	35	500	£27.74
V0850/FF	RS 2 VIE 1/2" FF	60	500	£30.29
V0860/FF	RS 2 VIE 3/4" FF	100	400	£61.52
V0870/FF	RS 2 VIE 1" FF	180	350	£67.41
V0871/FF	RS 2 VIE 1 1/4" FF	180	350	£87.85
V0874/FF	RS 2 VIE 1 1/2" FF	180	350	£95.47

CODE	TYPE	MAX FLOW L/MIN	MAX PRESSURE BAR	PRICE
	DIN 2353 LIGHT SERIES CONNECTION			
RS2-6L	RS 2 VIE M12X1.5	25	500	£9.56
RS2-8L	RS 2 VIE M14X1.5	25	500	£9.56
RS2-10L	RS 2 VIE M16X1.5	25	500	£9.56
RS2-12L	RS 2 VIE M18X1.5	35	500	£22.47
RS2-15L	RS 2 VIE M22X1.5	35	500	£25.13
RS2-18L	RS 2 VIE M26X1.5	60	500	£25.13
RS2-22L	RS 2 VIE M30X2	60	500	£51.49
RS2-28L	RS 2 VIE M36X2	100	350	£68.15
RS2-35L	RS 2 VIE M45X2	180	350	£151.34
RS2-42L	RS 2 VIE M52X2	180	350	£151.34

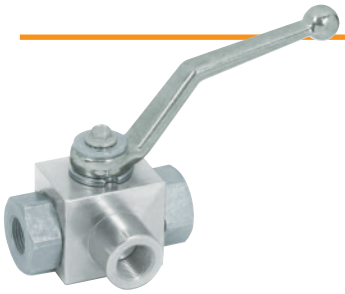

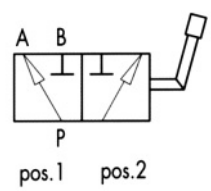

3 WAY BALL VALVES

USE AND OPERATION These valves are used to divert the inlet flow towards 2 alternate ports (**"L"** configuration)
Body: Zinc-plated steel **Internal parts**: Hardened and ground steel, **Seals**: Buna N standard and POM seals, **Tightness:** No leakage.
Applications: Connect P to the pressure flow, A and B to the circuit ports where the flow has to be diverted to. With the lever at 90 deg. Flow is connected to port A (position 1), with lever in line flow is connected to port B (position 2).
ON REQUEST: FIXING HOLES (CODE / FF).

CODE	TYPE	MAX FLOW L/MIN	MAX PRESSURE BAR	PRICE
	DIN/ISO 228 BSP FEMALE CONNECTION			
V0832	RS 3 VIE 1/4"	25	500	£39.12
V0842	RS 3 VIE 3/8"	35	500	£39.12
V0852	RS 3 VIE 1/2"	60	500	£44.60
V0862	RS 3 VIE 3/4"	100	400	£72.57
V0872	RS 3 VIE 1"	180	350	£88.51
V0873	RS 3 VIE 1 1/4"	180	350	£115.18
V0875	RS 3 VIE 1 1/2"	180	350	£142.51

50% OFF ALL PRICES

3 WAY BALL VALVES WITH FIXING HOLES

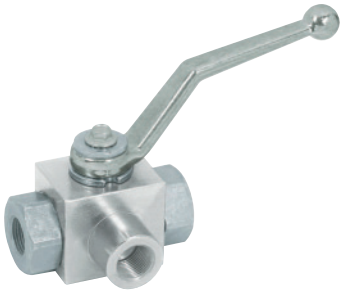

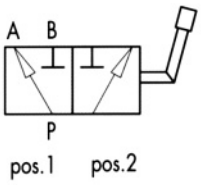

CODE	TYPE	MAX FLOW L/MIN	MAX PRESSURE BAR	PRICE
V0832/FF	RS 3 VIE 1/4" FF	25	500	£53.53
V0842/FF	RS 3 VIE 3/8" FF	35	500	£54.71
V0852/FF	RS 3 VIE 1/2" FF	60	500	£56.60
V0862/FF	RS 3 VIE 3/4" FF	100	400	£90.81
V0872/FF	RS 3 VIE 1" FF	180	350	£94.35
V0873/FF	RS 3 VIE 1 1/4" FF	180	350	£120.38
V0875/FF	RS 3 VIE 1 1/2" FF	180	350	£147.21

CODE	TYPE	MAX FLOW L/MIN	MAX PRESSURE BAR	PRICE
	DIN 2353 LIGHT SERIES CONNECTION			
RS3-6L	RS 3 VIE M12X1.5	25	500	£57.92
RS3-8L	RS 3 VIE M14X1.5	25	500	£57.92
RS3-10L	RS 3 VIE M16X1.5	25	500	£57.92
RS3-12L	RS 3 VIE M18X1.5	35	500	£60.83
RS3-15L	RS 3 VIE M22X1.5	60	500	£65.17
RS3-18L	RS 3 VIE M26X1.5	60	500	£65.17
RS3-22L	RS 3 VIE M30X2	60	500	£108.86
RS3-28L	RS 3 VIE M36X2	100	350	£122.15
RS3-35L	RS 3 VIE M45X2	180	350	£134.52
RS3-42L	RS 3 VIE M52X2	180	350	£537.03

DIVERTER VALVES

FLOWFIT

3 WAY DIVERTER VALVES

OPEN CENTRE

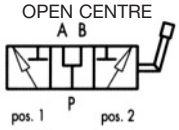

CC = CLOSED CENTRE

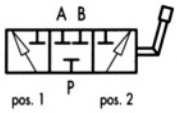

USE AND OPERATION

3 way diverter valves are used to divert the flow towards 2 different outlets.

Body: Cast iron **Colour:** Black **Internal parts**: Hardened and ground steel, **External Parts:** White Zinc plated **Seals**: Buna N standard, **Tightness:** Minor leakage. **Applications:** Connect P to the pressure flow, A and B to the circuit ports where the flow has to be diverted to. With the lever in position 1, the flow is connected towards port A; with the lever in position 2, the flow is connected towards port B. With the lever in the central position, ports P,A and B are all connected (open centre).
ON REQUEST: CLOSED CENTRE (CODE/CC). HIGH PRESSURE - UP TO 400 BAR (CODE/AP).

CODE	TYPE	MAX FLOW L/MIN	MAX PRESSURE BAR	PRICE
3 WAY OPEN CENTRE				
7000.0104	1/4" 3 WAY DIVERTER VALVE OPEN CENTRE	60	350	£61.40
7000.0100	3/8" 3 WAY DIVERTER VALVE OPEN CENTRE	60	350	£61.40
7000.0101	1/2" 3 WAY DIVERTER VALVE OPEN CENTRE	90	350	£61.40
7000.0102	3/4" 3 WAY DIVERTER VALVE OPEN CENTRE	120	350	£64.48
7000.0103	1" 3 WAY DIVERTER VALVE OPEN CENTRE	200	300	£69.08
3 WAY CLOSED CENTRE				
7000.0111	1/4" 3 WAY DIVERTER VALVE CLOSED CENTRE	60	350	£69.08
7000.0107	3/8" 3 WAY DIVERTER VALVE CLOSED CENTRE	60	350	£115.39
7000.0108	1/2" 3 WAY DIVERTER VALVE CLOSED CENTRE	90	350	£129.48
7000.0109	3/4" 3 WAY DIVERTER VALVE CLOSED CENTRE	120	350	£142.59
7000.0110	1" 3 WAY DIVERTER VALVE CLOSED CENTRE	200	300	£569.25

4 WAY DIVERTER VALVES

CLOSED CENTRE

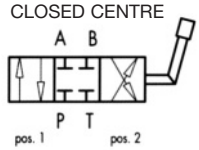

CA = OPEN CENTRE

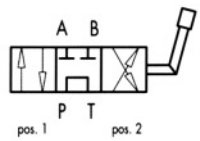

USE AND OPERATION

This valve is used to reverse oil flow from 2 ways in towards two ways out. It could be used to control a double acting actuator or to reverse the rotation of an hydraulic motor.

Body: Cast iron **Colour:** Black **Internal parts**: Hardened and ground steel, **External Parts:** White Zinc plated **Seals**: Buna N standard, **Tightness:** Low leakage.**Applications:** Connect P to the pressure flow, T to the tank and ports A and B to the actuators or motor. With lever in position 1, P is connected to A and at the same time B drains into the tank T; with lever in position 2, P is connected to B and at the same time A drains into tank T. With lever in the central position all ports are closed (closed centre). **ON REQUEST:** OPEN CENTRE (CODE/CC). HIGH PRESSURE - UP TO 400 BAR (CODE/AP).

CODE	TYPE	MAX FLOW L/MIN	MAX PRESSURE BAR	PRICE
4 WAY OPEN CENTRE				
7000.0104	1/4" 4 WAY DIVERTER VALVE OPEN CENTRE	60	350	£65.08
7000.0100	3/8" 4 WAY DIVERTER VALVE OPEN CENTRE	60	350	£65.08
7000.0101	1/2" 4 WAY DIVERTER VALVE OPEN CENTRE	90	350	£65.08
7000.0102	3/4" 4 WAY DIVERTER VALVE OPEN CENTRE	120	350	£68.35
7000.0103	1" 4 WAY DIVERTER VALVE OPEN CENTRE	200	300	£73.22
4 WAY CLOSED CENTRE				
7000.0111	1/4" 4 WAY DIVERTER VALVE CLOSED CENTRE	60	350	£73.22
7000.0107	3/8" 4 WAY DIVERTER VALVE CLOSED CENTRE	60	350	£122.31
7000.0108	1/2" 4 WAY DIVERTER VALVE CLOSED CENTRE	90	350	£137.25
7000.0109	3/4" 4 WAY DIVERTER VALVE CLOSED CENTRE	120	350	£151.15
7000.0110	1" 4 WAY DIVERTER VALVE CLOSED CENTRE	200	300	£603.41

6 WAY DIVERTER VALVES

USE AND OPERATION

This valve is made up of two 3-way diverters coupled: each of the 2 parts are used to divert the inlet flow towards two ports. The single lever controls both the parts at the same time. It's ideal to control 2 actuators.
Body: Cast iron **Colour:** Black **Internal parts**: Hardened and ground steel, **External Parts:** White Zinc plated **Seals**: Buna N standard, **Tightness:** Minor leakage. **Applications:** Connect P and P' to the 2 pressure flows, Ports A and B to the first actuator and ports A' and B' to the second actuator. With lever in position 1, P is connected to A and P' to A'; with lever in position 2, P is connected to B and P' to B'. With lever in central position all ports are connected to each other (open centre)
ON REQUEST: CLOSED CENTRE (CODE/CC). HIGH PRESSURE - UP TO 400 BAR (CODE/AP).

OPEN CENTRE

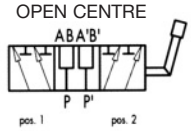

CLOSED CENTRE

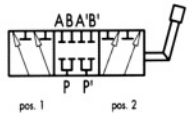

CODE	TYPE	MAX FLOW L/MIN	MAX PRESSURE BAR	PRICE
6 WAY OPEN CENTRE				
7000.0104	1/4" 6 WAY DIVERTER VALVE OPEN CENTRE	60+60	350	£85.90
7000.0100	3/8" 6 WAY DIVERTER VALVE OPEN CENTRE	60+60	350	£85.90
7000.0101	1/2" 6 WAY DIVERTER VALVE OPEN CENTRE	90+90	350	£104.26
7000.0102	3/4" 6 WAY DIVERTER VALVE OPEN CENTRE	120+120	350	£124.55
7000.0103	1" 6 WAY DIVERTER VALVE OPEN CENTRE	200+200	300	£178.57
6 WAY CLOSED CENTRE				
7000.0111	1/4" 6 WAY DIVERTER VALVE CLOSED CENTRE	60+60	350	£85.90
7000.0107	3/8" 6 WAY DIVERTER VALVE CLOSED CENTRE	60+60	350	£85.90
7000.0108	1/2" 6 WAY DIVERTER VALVE CLOSED CENTRE	90+90	350	£104.26
7000.0109	3/4" 6 WAY DIVERTER VALVE CLOSED CENTRE	120+120	350	£124.63
7000.0110	1" 6 WAY DIVERTER VALVE CLOSED CENTRE	200+200	300	£178.57

HIGH PRESSURE 3-WAY DIVERTER VALVES, STEEL BODY

USE AND OPERATION

Diverter flow is used to divert the flow towards 2 different outlets.
Body: Steel **Internal parts**: Hardened and ground steel, **Seals**: Buna N standard, **Tightness:** Minor leakage.
Applications: Connect P to the pressure flow, A and P to the ports of the hydraulic circuit where flow has to be diverted. With lever in position 1 the flow is connected towards port A; with lever in position 2, the flow is connected towards port B. With lever in central position ports P, A and B are all connected (open centre).

OPEN CENTRE

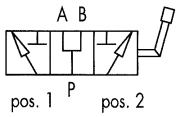

CLOSED CENTRE

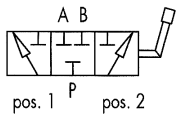

CODE	TYPE	BSP PORTS	MAX FLOW L/MIN	MAX PRESSURE BAR	WEIGHT KG	PRICE
VO879/AP	DF 3 VIE 1/4" AP ACC.	1/4"	20	500	0.65	£57.09
VO881/AP	DF 3 VIE 3/8" AP ACC.	3/8"	35	500	0.72	£57.09
VO891/AP	DF 3 VIE 1/2" AP ACC.	1/2"	60	500	0.92	£68.78
VO901/AP	DF 3 VIE 3/4" AP ACC.	3/4"	100	500	1.57	£75.26
VO911/AP	DF 3 VIE 1" AP ACC.	1"	180	500	2.17	£115.50

6 WAY DIVERTER VALVES, STEEL BODY

USE AND OPERATION

This valve is used to divert the flow from 2 ways in towards 4 ports (two at a time alternatively). It's ideal to control 2 actuators.
Body: Zinc-plated steel **Internal parts**: Hardened and ground steel, **Seals**: Buna N standard, **Tightness:** Minor leakage.
Applications: Connect P and P' to the 2 pressure flows, ports A and B to the first actuator and ports A' and B' to the second actuator. With lever in position 1, P is connected to A and P' to A'; with lever in position 2, P is connected to B and P' to B'. Use with lever in central position is NOT recommended.

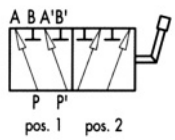

CODE	TYPE	MAX FLOW L/MIN	MAX PRESSURE BAR	PRICE
V0930	DF 6 VIE 3/8" ACCIAIO	40	300	£109.10
V0932	DF 6 VIE 1/2" ACCIAIO	60	300	£128.44

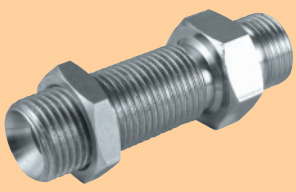

FLOWFIT

SEE OUR HYDRAULIC ADAPTOR SECTION FOR A FULL RANGE OF ADAPTOR SOLUTIONS.

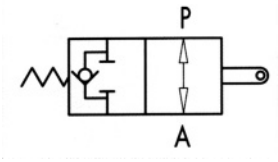

END STROKE VALVES, NORMALLY OPEN

USE AND OPERATION

This valve is used to stop oil inlet in a hydraulic circuit or to stop actuator's stroke (normally opened valve).
The valve closing, obtained by pulling or pushing the slider, allows an immediate and total stop of the oil flow.
Body: Cast iron **Internal parts**: Hardened and ground steel, **Seals**: Buna N standard and POM seals, **Tightness:** Minor leakage.
Applications: Connect P to the distributor and A to the circuit or to the actuator. When the slider is operating, flow is blocked from P towards A, whilst the check valve enables free flow oil flow in the reverse direction (from A towards P).

CODE	TYPE	PORT SIZE BSP	MAX FLOW L/MIN	MAX PRESSURE BAR	PRICE
V0824	V-FCR 1T 60	3/8"	60	350	£98.48
V0826	V-FCR 1T 80	1/2"	80	350	£101.77
V0825	V-FCR 1T 120	3/4"	120	350	£213.13

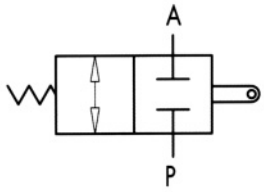

END STROKE VALVES, NORMALLY CLOSED

USE AND OPERATION

This valve is used to enable oil inlet in a hydraulic circuit (normally closed valve). The valve opens by pulling or pushing the slider.
Body: Cast iron **Internal parts**: Hardened and ground steel, **Seals**: Buna N standard and POM seals, **Tightness:** Minor
Applications: Connect independently A and P to the distributor and to the circuit. When slider is operating, flow is free in both directions, vice versa it is blocked.

CODE	TYPE	PORT SIZE BSP	MAX FLOW L/MIN	MAX PRESSURE BAR	PRICE
V0820	V-FCR 2T 60	3/8"	60	350	£93.48
V0822	V-FCR 2T 80	1/2"	80	350	£95.50
V0823	V-FCR 2T 120	3/4"	120	350	£201.08

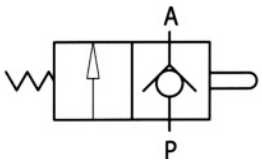

PUSHBUTTON END STROKE VALVES, NORMALLY CLOSED

USE AND OPERATION

This valve allows oil passage in a hydraulic circuit (normally closed valve). Once the slider is set into action, oil flow is free from P to A. It can be used: (a) to set the sequence of 2 actuators (b) as end
Body: Zinc-plated steel **Internal parts**: Hardened and ground steel, **Seals**: Buna N standard, **Tightness:** No leakage.
Applications: Connect A directly to the tank line P as for necessity. Mounting scheme can vary according to the use.

CODE	TYPE	MAX FLOW L/MIN	MAX PRESSURE BAR	PRICE
V0827	V - 101 3/8" NC	40	350	£90.31
V0828	V - 101 1/2" NC	60	350	£100.76
V0829	V - 101 3/4" NC	100	350	£135.37

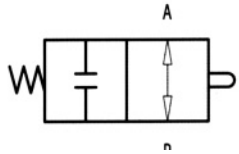

PUSHBUTTON END STROKE VALVES, NORMALLY OPENED

USE AND OPERATION

This valve is used to block oil passage in a hydraulic circuit (normally opened valve). The valve is closed by pushing mechanically the slider.
Body: Zinc-plated steel **Internal parts**: Hardened and ground steel, **Seals**: Buna N standard, **Tightness:** No leakage.
Applications: Connect independently A or P to the distributor and to the circuit. When button is operating, flow is blocked in both directions, vice versa it is free.

CODE	TYPE	MAX FLOW L/MIN	MAX PRESSURE BAR	PRICE
V0817	V - 101 3/8" NA	35	350	£104.98
V0818	V - 101 1/2" NA	50	350	£108.41

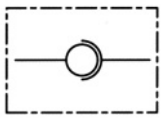

IN LINE ROTATING COUPLING

USE AND OPERATION

These valves are mounted between the end of a flexible hose and a fixed component to compensate hose's rotations and torsions and prevent its damaging. **They are not suitable for fast and continuous rotations.** They are used in every production field where systems have flexible moving hoses. In line mounting.
Body: Zinc-plated steel. **Tightness:** Low friction seals.
Applications: Connect port P to the uses.

CODE	TYPE	MAX FLOW L/MIN	MAX PRESSURE (BAR) WHEN ROTATING	MAX PRESSURE BAR	MAX ROTATION SPEED	PRICE
G1050	GGL 1/4"	25	200	400	212	£14.99
G1060	GGL 3/8"	35	200	400	173	£15.94
G1070	GGL 1/2"	60	150	300	160	£18.63
G1080	GGL 3/4"	100	150	300	120	£27.71
G1090	GGL 1"	180	100	300	100	£38.04
G1091	GGL 1 1/4"	200	100	300	86	£68.57
G1092	GGL 1 1/2"	250	80	300	73	£102.92
G1093	GGL 2"	300	50	250	50	£142.87

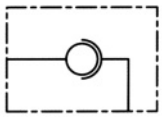

90 DEGREE ROTATING COUPLING

USE AND OPERATION

These valves are mounted between the end of a flexible hose and a fixed component to compensate hose's rotations and torsions and prevent its damaging. **They are not suitable for fast and continuous rotations.** They are used in every production field where systems have flexible moving hoses. 90 deg. mounting.
Body: Zinc-plated steel. **Tightness:** Low friction seals.
Applications: Connect port P to the uses.

CODE	TYPE	MAX FLOW L/MIN	MAX PRESSURE (BAR) WHEN ROTATING	MAX PRESSURE BAR	MAX ROTATION SPEED	PRICE
G0990	GG 90DEG 1/4"	25	200	400	212	£16.03
G1010	GG 90DEG 3/8"	35	200	400	173	£17.73
G1020	GG 90DEG 1/2"	60	150	300	160	£20.98
G1030	GG 90DEG 3/4"	100	150	300	120	£32.39
G1040	GG 90DEG 1"	180	100	300	100	£42.07
G1042	GG 90DEG 1 1/4"	200	100	300	86	£107.89
G1043	GG 90DEG 1 1/2"	250	80	300	73	£141.33
G1044	GG 90DEG 2"	300	50	250	50	£195.95

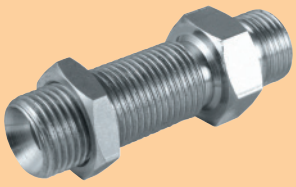

FLOWFIT

SEE OUR HYDRAULIC ADAPTOR SECTION FOR A FULL RANGE OF ADAPTOR SOLUTIONS.

PLOUGH OVERTURNING VALVES

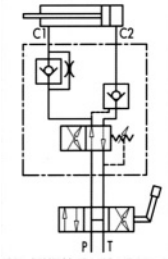

SINGLE ACTING PLOUGH OVERTURNING VALVES

USE AND OPERATION

This valve has been realised for use on cylinders for reversible plough to obtain the automatic backflow and therefore the reversal of the motion of the hydraulic cylinder that makes the plough rotate. It is provided with a single pilot check valve which guarantees safety just on the block side, whilst the stem side it must be leaned on the plough mechanical locks. Assembly on balanced and light plough with internal diameters 40/50mm and 60/80mm is recommended.
Body: Zinc-plated steel **Internal parts**: Hardened and ground steel, **Seals**: Buna N standard, **Tightness:** No leakage.
These valves are supplied with exchange pressure at 140 Bar: according to your requirements, pressure setting can be modified by acting on the pressure regulator.
Applications: Connect C1 to the cylinder's stem, C2 to the block, P and T to the machine inlet. Due to it's shape, it can be in-line assembled on a hydraulic cylinder or directly fixed on the plough by means of the threaded hole on the body.

CODE	TYPE	PORTS	MAX FLOW L/MIN	MAX PRESSURE BAR	PRICE
V0278	VRA 40/50 SE	3/8"	200	400	£173.98
V0280	VRA 60/80 SE	3/8"	200	400	£173.98

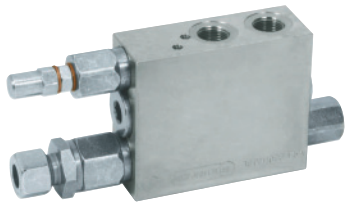

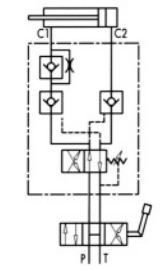

DOUBLE ACTING PLOUGH OVERTURNING VALVES

USE AND OPERATION

This valve has been realised for use on cylinders for reversible plough to obtain the automatic backflow and therefore the motion reversal of the hydraulic cylinder that makes the plough rotate. It is provided with a double pilot check valve which guarantees safety and enables to put and block the cylinder in any position. The motion reversal of the piston is made through a differential type relief valve exactly in the dead point of the plough, generating more power and speed. It can be assembled on heavy and unbalanced plough with the following internal diameters: 40/50, 60/80, 80.100, 100/110, 110/130 mm.
Body: Zinc-plated steel **Internal parts**: Hardened and ground steel, **Seals**: Buna N standard, **Tightness:** No leakage.
These valves are supplied with exchange pressure at 140 Bar: according to your requirements, pressure setting can be modified by acting on the pressure regulator.
Applications: Connect C1 to the cylinder's stem, C2 to the block, P and T to the machine inlet. Due to it's shape, it can be in-line assembled on a hydraulic cylinder or directly fixed on the plough by means of the threaded hole on the body.

CODE	TYPE	PORTS	MAX FLOW L/MIN	MAX PRESSURE BAR	PRICE
V0282	VRAP 40/50 SE	3/8"	250	400	£200.08
V0290	VRAP 60/80 SE	3/8"	250	400	£200.08
V0300	VRAP 80/100 SE	3/8"	250	400	£200.08
V0302	VRAP 100/110 SE	3/8"	250	400	£200.08
V0320	VRAP 110/130 SE	3/8"	250	400	£203.91

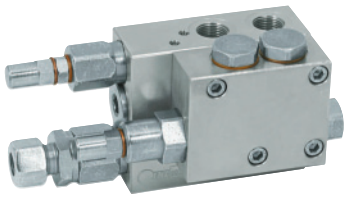

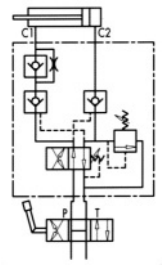

DOUBLE ACTING PLOUGH OVERTURNING VALVES WITH RELIEF VALVE

USE AND OPERATION

This valve has been realised for use on cylinders for reversible plough to obtain the automatic backflow and therefore the motion reversal of the hydraulic cylinder that makes the plough rotate. It is provided with a double pilot check valve and with a relief valve that enables to reduce the thrust (block side) in order not to damage the mechanical locks and the plough's head. The motion reversal of the piston is made through a differential type relief valve exactly in the dead point of the plough, generating more
power and speed. It's ideal for assembly on heavy and unbalanced plough with the following internal diameters: 60/80, 80.100, 100/110, 110/130 mm.
Body: Zinc-plated steel **Internal parts**: Hardened and ground steel, **Seals**: Buna N standard, **Tightness:** No leakage.
These valves are supplied with exchange pressure at 140 Bar: according to your requirements, pressure setting can be modified by acting on the pressure regulator.
Applications: Connect C1 to the cylinder's stem, C2 to the block, P and T to the machine inlet. Due to it's shape, it can be in-line assembled on a hydraulic cylinder or directly fixed on the plough by means of the threaded hole on the body.

CODE	TYPE	PORTS	MAX FLOW L/MIN	MAX PRESSURE BAR	PRICE
V0350	VRAP 60/80 SE + VMP	3/8"	250	400	£213.13
V0360	VRAP 80/100 SE + VMP	3/8"	250	400	£249.73
V0376	VRAP 100/110 SE + VMP	3/8"	250	400	£249.73
V0380	VRAP 110/130 SE + VMP	3/8"	250	400	£252.94

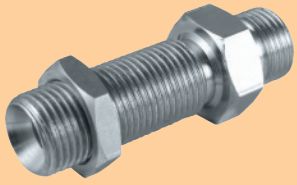

FLOWFIT

SEE OUR HYDRAULIC ADAPTOR SECTION FOR A FULL RANGE OF ADAPTOR SOLUTIONS.

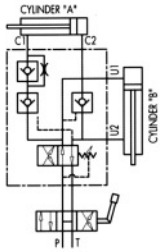

DOUBLE ACTING PLOUGH OVERTURNING VALVE BY DOWN MOULDBOARD LOAD SHIFTING

USE AND OPERATION

This valve has been realised for use on cylinders for reversible plough to obtain the automatic backflow and therefore the motion reversal of the hydraulic cylinder that makes the plough rotate. It has been designed to set in action 2 cylinders with disadvantageous rotation load (see diagram).
Operating Instructions: First cylinder B starts lining up the load. Before the manoeuvre ends, cylinder A starts overturning.
Body: Zinc-plated steel **Internal parts**: Hardened and ground steel, **Seals**: Buna N standard, **Tightness:** No leakage.
These valves are supplied with exchange pressure at 140 Bar: according to your requirements, pressure setting can be modified by acting on the pressure regulator.
Applications: Connect C1 to the stem, C2 to the cylinder's block A, U1 to the block and U2 to B port of the cylinder; P and T to the machine inlet. Due to it's shape, it can be in-line assembled on a hydraulic cylinder or directly fixed on the plough by means of the threaded hole on the body.

CODE	TYPE	MAX FLOW L/MIN	MAX PRESSURE BAR	PRICE
V0330	VRAP 80/100 SS	250	400	£213.13

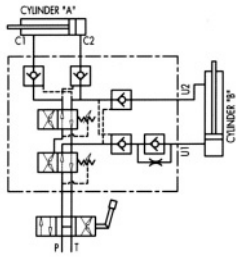

DOUBLE ACTING PLOUGH OVERTURNING VALVE BY UP MOULDBOARD LOAD SHIFTING

USE AND OPERATION

This valve has been realised for use on cylinders for reversible plough to obtain the automatic backflow and therefore the motion reversal of the hydraulic cylinder that makes the plough rotate. It has been designed to set in action 2 cylinders with disadvantageous rotation load (see diagram).
Operating Instructions: Sequence working: first cylinder B starts lining up the load; once it has got to the end of it's stroke, cylinder A starts overturning. When this gets to the dead point, A and B start working at the same time, B with a delayed speed in relation to A.
Body: Zinc-plated steel **Internal parts**: Hardened and ground steel, **Seals**: Buna N standard, **Tightness:** No leakage.
These valves are supplied with exchange pressure at 140 Bar: according to your requirements, pressure setting can be modified by acting on the pressure regulator.
Applications: Connect C1 to the stem, C2 to the cylinder's block A, U1 to the block and U2 to B port of the cylinder; P and T to the machine inlet. Due to it's shape, it can be in-line assembled on a hydraulic cylinder or directly fixed on the plough by means of the threaded hole on the body.

CODE	TYPE	MAX FLOW L/MIN	MAX PRESSURE BAR	PRICE
V0340	VRAP 80/100 SV TN	230	400	£564.38

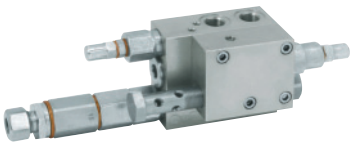

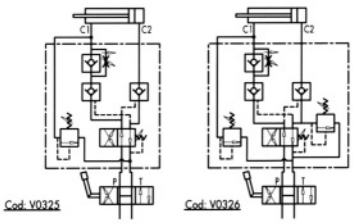

DOUBLE ACTING PLOUGH OUTSIDE DRILLS OVERTURNING VALVES FOR CYLINDER WITH MEMORYAND WITHOUT MEMORY

USE AND OPERATION

Valves for actuators with memory (V0325): Designed for use on cylinders with memory for outside drills reversible ploughs, it's provided with a duel cross relief valve which provides protection against tear's shocks when the plough exceeds the dead point.
Valves for actuators without memory: Designed for use on cylinders without memory for outside drills reversible ploughs, it is provided with a duel cross relief valve: this enables to reduce the thrust pressure (block side) in order not to damage the mechanical locks on the plough's head.
Both systems are provided with a fixed compensated flow control valve which allows to keep a constant speed, whether the plough works inside the drills or outside.
Body: Zinc-plated steel **Internal parts**: Hardened and ground steel, **Seals**: Buna N standard, **Tightness:** No leakage.
These valves are supplied with exchange pressure at 140 Bar: according to your requirements, pressure setting can be modified by acting on the pressure regulator.
Applications: Connect C1 and the duel cross relief valve to the cylinder from the rod side through the double banjo bolt (supplied with the valve) and double banjos, connect C2 to the cylinder from the block's side, P and T to the machine inlet.

CODE	TYPE	MAX FLOW L/MIN	MAX PRESSURE BAR	PRICE
V0325	VRAP 110/130 FSCM	250	400	£294.32
V0326	VRAP 110/130 FSSM	250	400	£322.17

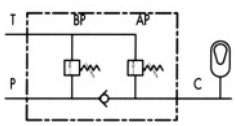

1 WAY SPECIAL BLOCK FOR NO-STOP PLOUGH AND SUB-SOILERS TILLERS

USE AND OPERATION

This valve is made up of 2 relief valves and 1 check valve. It is used to supply pressure to tanked systems on non-stop plough and sub-soilers tillers in order to provide protection against shocks.
Body: Zinc-plated steel **Internal parts**: Hardened and ground steel, **Seals**: Buna N standard, **Tightness:** No leakage.
Applications: Connect P to the machine inlet, T to the draining or to the tank for eventual reutilization and IC to the system.
* BP adjusts the charge pressure of system and is set ay 80 Bar.
* AP adjusts the eventual security drainage opening and is set at 250 Bar.

CODE	TYPE	MAX PRESSURE BAR	PRICE
V0295	MASSELLO 1 VIA 3/8"	350	£202.78
V0296	MASSELLO 1 VIA 1/2"	350	£217.94

50% OFF ALL PRICES

FLOWFIT HYDRAULIC MOTORS

HYDRAULIC MOTOR SERIES FFPMM.....131
HYDRAULIC MOTOR PRICE LIST – BUILD YOUR OWN.....138
HYDRAULIC MOTOR PRICE LIST – COMPLETE.....138
HYDRAULIC MOTOR SERIES FFPM.....139
HYDRAULIC MOTOR PRICE LIST – BUILD YOUR OWN.....148
HYDRAULIC MOTOR PRICE LIST – COMPLETE.....148
HYDRAULIC MOTOR SERIES FFPRM.....150
HYDRAULIC MOTOR PRICE LIST - BUILD YOUR OWN 159
HYDRAULIC MOTOR PRICE LIST - COMPLETE 159
HYDRAULIC MOTOR SERIES FFPMH.....161
HYDRAULIC MOTOR PRICE LIST - BUILD YOUR OWN 168
HYDRAULIC MOTOR PRICE LIST - COMPLETE 168
HYDRAULIC MOTOR SERIES FFPMS.....169
HYDRAULIC MOTOR PRICE LIST - BUILD YOUR OWN 177
HYDRAULIC MOTOR PRICE LIST - COMPLETE 177
HYDRAULIC MOTOR SERIES FFPMSY.....179
HYDRAULIC MOTOR SERIES FFPMT.....184
HYDRAULIC MOTOR PRICE LIST - BUILD YOUR OWN 191
HYDRAULIC MOTOR PRICE LIST - COMPLETE 192
HYDRAULIC MOTOR SERIES FFPMV.....193
HYDRAULIC MOTOR PRICE LIST - BUILD YOUR OWN 199
HYDRAULIC MOTOR PRICE LIST - COMPLETE 199
HYDRAULIC MOTOR CALCULATIONS.....200

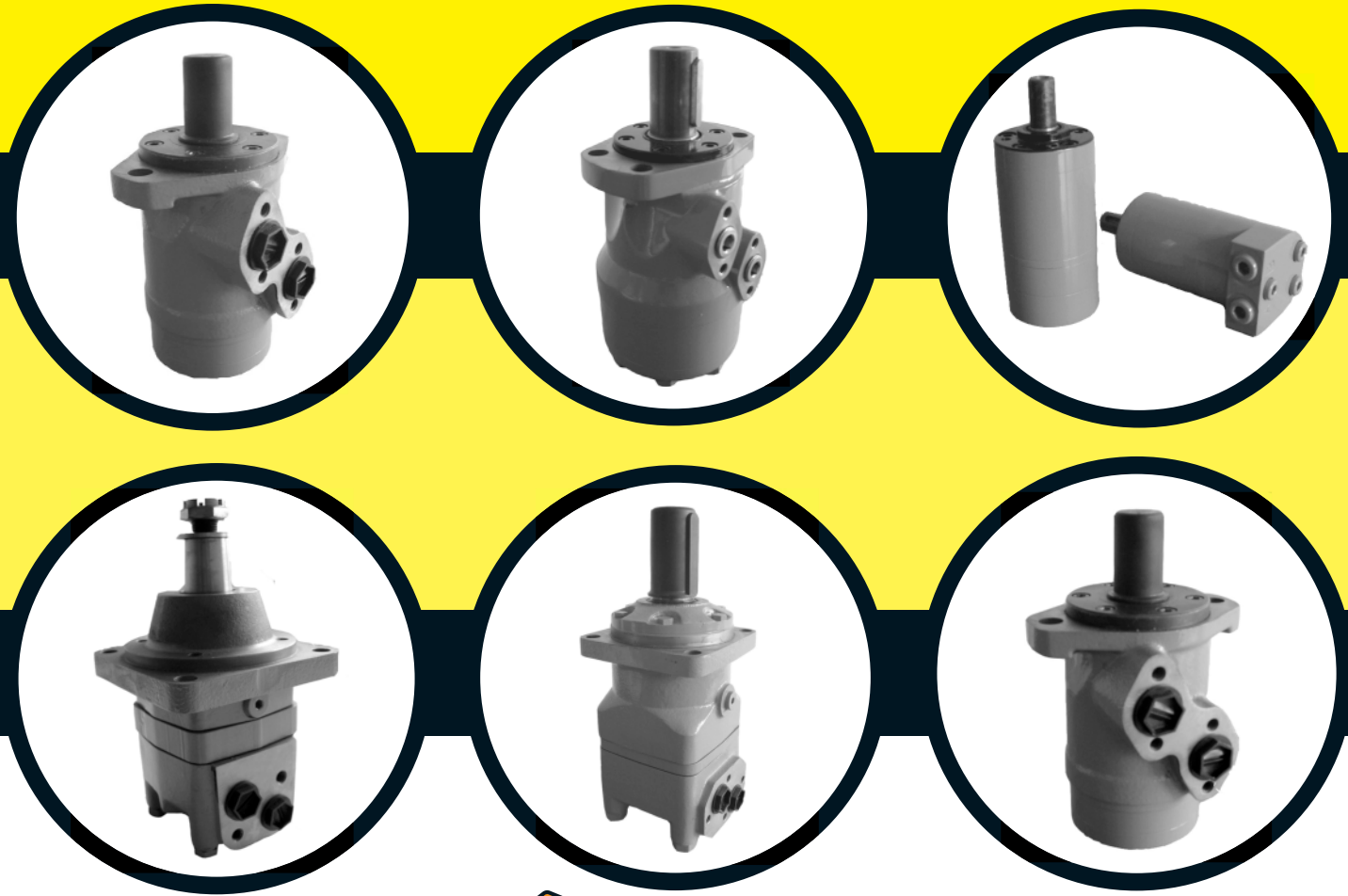

FLOWFIT

Inhaltsverzeichnis / *Contents*

FFPMM Hydraulik Motor/*FFPMM Hydraulic Motor* **131**
Leistungsdaten / *Performance data* 132
Abmessungen / *Dimensions* 134
Abtriebswellen / *Output shafts* 136
Bestellinformationen / *Order Information* 137
Price List 138
FFPM Hydraulik Motor /*FFPM Hydraulic Motor* **139**
Leistungsdaten / *Performance data* 140
Abmessungen / *Dimensions* 143
Abmessungen FFMW / *Dimensions FFPMW* 144
Abtriebswellen / *Output shafts* 145
Bestellinformationen / *Order Information* 146
Price List 148
FFPRM Hydraulik Motor/*FFPRM Hydraulic Motor* **150**
Leistungsdaten / *Performance data* 151
Abmessungen / *Dimensions* 154
Abtriebswellen / *Output shafts* 155
Bestellinformationen / *Order Information* 158
Price List 159
FFPMH Hydraulik Motor/*FFPMH Hydraulic Motor* **161**
Leistungsdaten / *Performance data* 162
Abmessungen / *Dimensions* 165
Abtriebswellen / *Output shafts* 166
Bestellinformationen / *Order Information* 167
Price List 168
FFPMS Hydraulik Motor/*FFPMS Hydraulic Motor* **169**
Leistungsdaten / *Performance data* 170
Abmessungen / *Dimensions* 172
Abtriebswellen / *Output shafts* 175
Bestellinformationen / *Order Information* 176
Price List 177
FFPMSY Hydraulik Motor /*FFPMSY Hydraulic Motor* **179**
Leistungsdaten / *Performance data* 180
Abmessungen / *Dimensions* 182
Bestellinformationen / *Order Information* 183
FFPMT Hydraulik Motor /*FFPMT Hydraulic Motor* **184**
Leistungsdaten / *Performance data* 185
Abmessungen / *Dimensions* 187
Abtriebswellen / *Output shafts* 190
Bestellinformationen / *Order Information* 191
Price List 191
FFPMV Hydraulik Motor /*FFPMV Hydraulic Motor* **193**
Leistungsdaten / *Performance data* 194
Abmessungen / *Dimensions* 196
Abtriebswellen / *Output shafts* 198
Bestellinformationen / *Order Information* 198
Price List 199

Calculation of wheel drives **200**

FFPMM Hydraulik Motor

- Modell Längsschieberventil mit Gerotor
- Mit oder ohne Flansch
- Ideal für enge Bauräume
- Internes Rückschlagventil
- Seiten- und Endanschluss
- Verwendung ohne Leckölanschluss möglich

FFPMM Hydraulic Motor

- *Spool valve type with gerotor*
- *With or without flange*
- *Optimized for small spaces*
- *Internal check valve*
- *Side and rear ports*
- *Usage without drain line possible*

TYP / *Type*		FFPMM 8	FFPMM 12.5	FFPMM 20	FFPMM 32	FFPMM 40	FFPMM 50
Schluckvolumen / *Displacement* [cm^3/REV]		8.2	12.9	19.9	31.6	39.8	50.3
Max. Drehzahl / *Max. Speed* [RPM]	Dauerbetrieb / *Cont.*	1950	1550	1000	630	500	400
	Int.(1)	2450	1940	1250	800	630	500
Max. Drehmoment / *Max. Torque* [daNm]	Dauerbetrieb / *Cont.*	11	16	25	40	45	46
	Int.(1)	15	23	35	57	70	88
	Spitze / *Peak* (2)	21	33	51	64	82	100
Max. Leistungsabgabe / *Max. Output Power* [kW]	Dauerbetrieb / *Cont.*	1.8	2.4	2.4	2.4	2.2	1.8
	Int.(1)	2.6	3.2	3.2	3.2	3.2	3.2
Max. Druckgefälle / *Max. Pressure Drop* [bar]	Dauerbetrieb / *Cont.*	100	100	100	100	90	70
	Int.(1)	140	140	140	140	140	140
	Spitze / *Peak* (2)	200	200	200	160	160	160
Max. Ölstrom / *Max. Oil flow* [l/min]	Dauerbetrieb / *Cont*	16	20	20	20	20	20
	Int.(1)	20	25	25	25	25	25
Max. Eingangsdruck / *Max. Input Pressure* [bar]	Dauerbetrieb / *Cont.*	175	175	175	175	175	175
	Int.(1)	225	225	225	225	225	225
Gewicht / *Weight* [kg]		1.9	2	2.1	2.2	2.3	2.4

(1) Intermittierender Betrieb max. 6 Sekunden / Minute
(2) Spitzenbetrieb max. 0,6 Sekunden / Minute

(1) Intermittend operation rating applies to 6 sec. of every minute
(2) Peak load rating applies to 0,6 sec of every minute

Leistungsdaten

Performance data

FFPMM 8 (8.2 cm³/U)

Durchflussmenge / *Oil flow* (l/min)	Druck / *pressure* (bar) 35	50	70	100 (Max. cont.)	120	140 (Max. Int.)	
2	0.3	0.5	0.8	1.0	1.2	1.4	daNm
	228	**218**	**206**	**156**	**111**	**58**	RPM
4	0.3	0.5	0.7	1.1	1.3	1.5	
	474	**471**	**463**	**426**	**391**	**331**	
8	0.3	0.5	0.7	1.1	1.3	1.5	
	935	**946**	**926**	**884**	**855**	**816**	
12	0.2	0.5	0.7	1.0	1.3	1.5	
	1444	**1426**	**1402**	**1360**	**1324**	**1288**	
15 (Max. cont.)		0.4	0.7	1.0	1.2	1.4	
		1912	**1900**	**1861**	**1833**	**1780**	
20 (Max. int.)		0	0.6	1.0	1.0	1.4	
		2432	**2395**	**2350**	**2328**	**2281**	

FFPMM 12.5 (12.9 cm³/U)

Durchflussmenge / *Oil flow* (l/min)	Druck / *pressure* (bar) 35	50	70	100 (Max. cont.)	120	140 (Max. Int.)	
2	6	8	11	16	19		daNm
	140	**136**	**119**	**68**	**35**		RPM
4	6	8	12	17	19	23	
	296	**289**	**274**	**229**	**200**	**145**	
8	5	8	12	17	20	24	
	605	**596**	**583**	**543**	**514**	**469**	
12	5	8	11	16	20	24	
	912	**905**	**895**	**859**	**834**	**784**	
15	5	7	11	16	19	23	
	1152	**1144**	**1136**	**1102**	**1078**	**1036**	
20 (Max. cont.)	3	7	10	15	19	22	
	1542	**1532**	**1521**	**1500**	**1482**	**1437**	
25 (Max. int.)	2	6	9	14	18	22	
	1910	**1891**	**1878**	**1848**	**1828**	**1788**	

FFPMM 20 (19.9 cm³/U)

Durchflussmenge / *Oil flow* (l/min)	Druck / *pressure* (bar) 17	35	50	70	100 (Max. cont.)	120	140 (Max. Int.)	
2	3	9	14	19	26	30		daNm
	99	**96**	**89**	**74**	**42**	**21**		RPM
4	4	9	14	19	26	31	36	
	197	**191**	**182**	**178**	**134**	**112**	**74**	
8	4	9	13	19	27	31	36	
	398	**395**	**391**	**377**	**340**	**319**	**288**	
12	3	8	13	18	26	31	37	
	596	**594**	**588**	**579**	**545**	**523**	**493**	
15	3	8	12	17	25	30	36	
	745	**741**	**738**	**728**	**695**	**684**	**660**	
20 (Max. cont.)	1	6	11	19	24	29	35	
	998	**995**	**991**	**985**	**962**	**916**	**885**	
25 (Max. int.)		4	9	14	23	28	33	
		1247	**1245**	**1242**	**1189**	**1180**	**1176**	

50% OFF ALL PRICES

Leistungsdaten

Performance data

FFPMM 32 (31.6 cm³/U)

Druck / *pressure* (bar)

Durchflussmenge / *Oil flow* (l/min)		20	35	50	70	100 (Max. cont.)	120	140 (Max. Int.)	
	2	7	15	21	28	40			daNm
		61	**57**	**52**	**47**	**16**			RPM
	4	7	15	21	29	41	48	57	
		126	**121**	**114**	**106**	**82**	**67**	**49**	
	8	7	15	21	29	41	49	58	
		250	**244**	**239**	**231**	**207**	**194**	**167**	
	12	6	13	20	28	40	48	58	
		378	**374**	**369**	**362**	**338**	**322**	**297**	
	15	4	12	18	27	39	47	57	
		476	**472**	**468**	**462**	**441**	**429**	**406**	
Max. cont.	20	3	10	17	25	37	46	55	
		633	**630**	**627**	**619**	**601**	**585**	**566**	
Max. int.	25	1	8	15	23	35	43	52	
		791	**789**	**787**	**783**	**766**	**735**	**732**	

FFPMM 40 (39.8 cm³/U)

Druck / *pressure* (bar)

Durchflussmenge / *Oil flow* (l/min)		30	50	70	85 (Max. cont.)	100	120 (Max. Int.)	
	2	16	27	36	44	51		daNm
		45	**40**	**34**	**28**	**17**		RPM
	4	16	27	37	44	52	62	
		96	**93**	**85**	**79**	**65**	**52**	
	8	15	26	36	44	52	63	
		197	**195**	**182**	**176**	**166**	**154**	
	12	14	25	35	43	51	62	
		293	**287**	**282**	**277**	**268**	**257**	
	15	13	24	34	42	50	62	
		371	**365**	**360**	**355**	**347**	**338**	
Max. cont.	20	10	21	31	39	48	59	
		497	**492**	**487**	**480**	**472**	**463**	
Max. int.	25	7	19	29	37	44	56	
		622	**617**	**612**	**607**	**600**	**591**	

FFPMM 50 (50.3 cm³/U)

Druck / *pressure* (bar)

Durchflussmenge / *Oil flow* (l/min)		15	30	50	70 (Max. cont.)	100 (Max. Int.)	
	2	11	23	36	50		daNm
		37	**33**	**27**	**22**		RPM
	4	11	22	36	50	70	
		76	**73**	**68**	**63**	**55**	
	8	11	21	35	50	71	
		157	**154**	**149**	**145**	**137**	
	12	11	20	33	49	71	
		237	**234**	**231**	**226**	**218**	
	15	10	18	32	47	69	
		296	**295**	**294**	**288**	**282**	
Max. cont.	20	8	14	29	44	64	
		395	**395**	**393**	**390**	**391**	
Max. int.	25	4	10	25	40	59	
		498	**496**	**494**	**490**	**484**	

Abmessungen

Anschlüsse / *Porting*

Hintenanschluss / ***Rear ports***

Version G M U

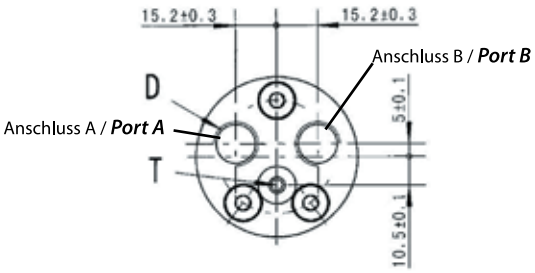

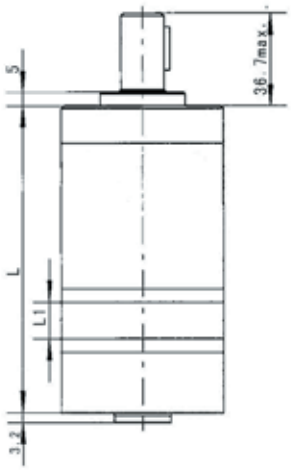

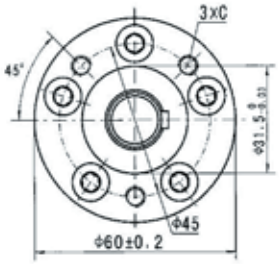

An-schluss / *Port*	Versionen / *Versions*	
	Leer / *Omit*	U
P(A,B)	2 x G 3/8"	2 x 9/16-18 UNF
T	G 1/8"	3/8-24 UNF
C	3 x M6	3 x 1/4-28 UNF-2B

Dimensions

Anbaumaße / *Mounting*

Ovalflansch / ***Oval Mount*** 2-Loch / ***2 holes***

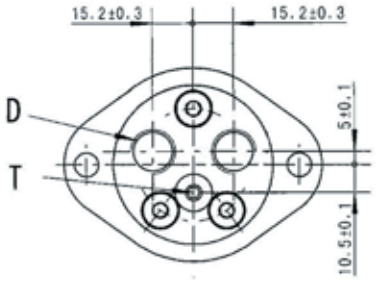

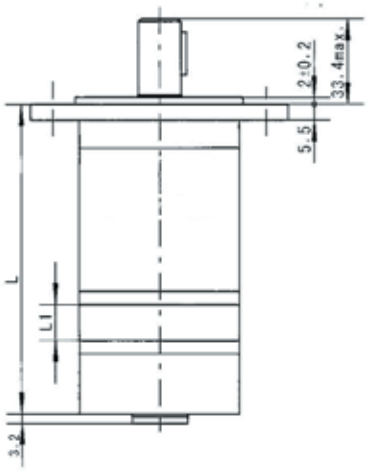

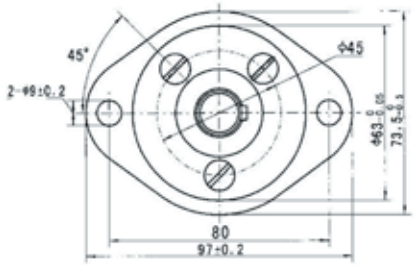

Typ / *Type*	L	L_1	Typ / *Type*	L	L_1
FFPMM 8	104	3.5	FFPMMF 8	107.5	3.5
FFPMM 12.5	106	5.5	FFPMMF 12.5	109.5	5.5
FFPMM 20	109	8.5	FFPMMF 20	112.5	8.5
FFPMM 32	114	13.5	FFPMMF 32	117.5	13.5
FFPMM 40	117.5	17	FFPMMF 40	121	17
FFPMM 50	122	21.5	FFPMMF 50	125.5	21.5

50% OFF ALL PRICES

Abmessungen

Anschlüsse / *Porting*

Seitenanschluss / ***Side Ports***

Version G M U

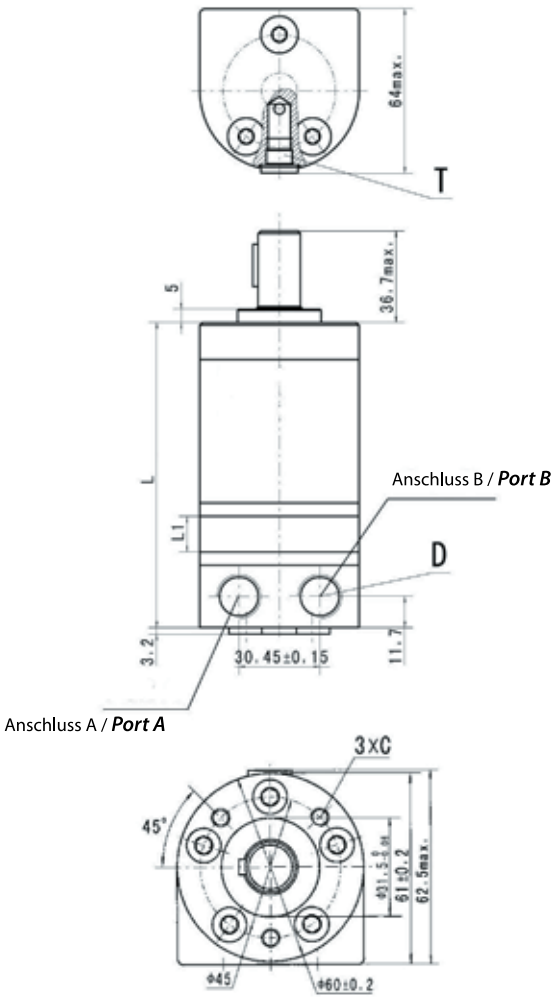

Dimensions

Anbaumaße / *Mounting*

Ovalflansch / ***Oval Mount*** 2-Loch / ***2 holes***

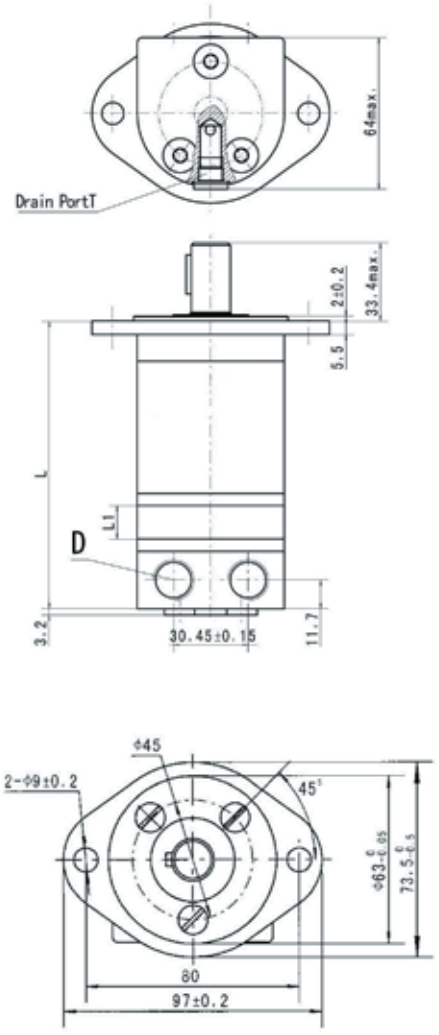

An-schluss / *Port*	Versionen / *Versions*	
	Leer / *Omit*	U
P(A,B)	2 x G 3/8"	2 x 9/16-18 UNF
T	G 1/8"	3/8-24 UNF
C	3 x M6	3 x 1/4-28 UNF-2B

Typ / *Type*	L	L_1	Typ / *Type*	L	L_1
FFPMMS 8	105	3.5	FFPMMFS 8	108.5	3.5
FFPMMS 12.5	107	5.5	FFPMMFS 12.5	110.5	5.5
FFPMMS 20	110	8.5	FFPMMFS 20	113.5	8.5
FFPMMS 32	115	13.5	FFPMMFS 32	118.5	13.5
FFPMMS 40	118.5	17	FFPMMFS 40	122	17
FFPMMS 50	123	21.5	FFPMMFS 50	126.5	21.5

Abtriebswellen

C - Ø 16 mm zylindrisch mit Passfeder 5 x 5 x 16. Max. Drehmoment: 3.9 daNm / ***Ø 16 mm straight, parallel key 5 x 5 x 16. Max. torque: 3.9 daNm***

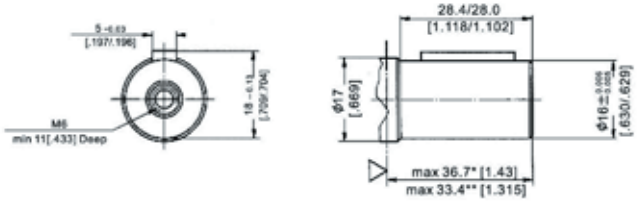

CO - Ø 15.8 mm (5/8") zylindrisch mit Passfeder 3/16" x 3/16" x 3/4". Max. Drehmoment: 3.9 daNm / ***Ø 15.8mm (5/8") straight, parallel key" 3/16 x 3/16" x 3/4". Max. torque: 3.9 daNm***

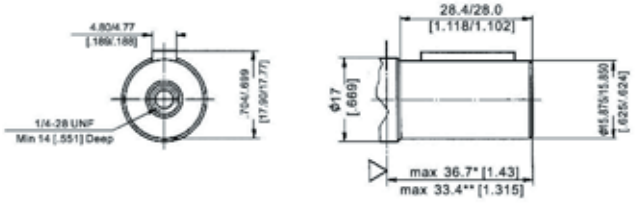

Output shafts

H - Ø 15.8 mm (5/8") zylindrisch mit Querloch Ø 4.82 mm. Max. Drehmoment: 3.9 daNm / ***Ø 15.8mm (5/8")straight, cross hole Ø 4.82 mm. Max. torque: 3.9 daN.***

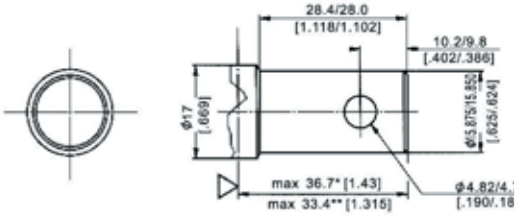

SH - Ø 16.5 mm verzahnt , B17 x 14. Max. Drehmoment: 4.4 daNm / ***Ø 16.5 mm splined, B17 x 14. Max. torque: 4.4 daNm***

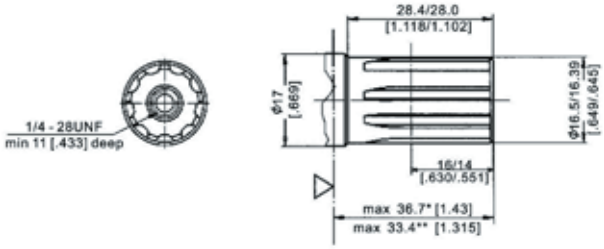

Radiallast / *Shaft Load*

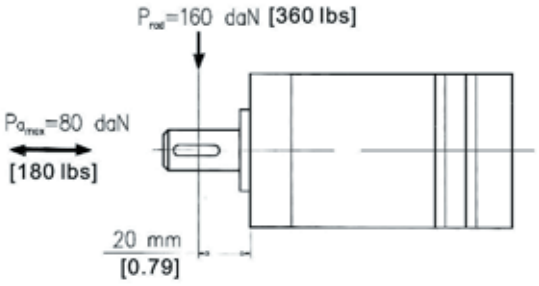

Die zulässige Radiallast berechnet sich aus dem Abstand L zwischen Kraftangriffspunkt und der Montagefläche des Flansches / ***The permissible radial shaft load is calculated from the distance L between the point load application and the mounting surface:***

$$Frad = \frac{600}{n} \cdot \frac{13040}{61{,}5 + L} [daN]$$

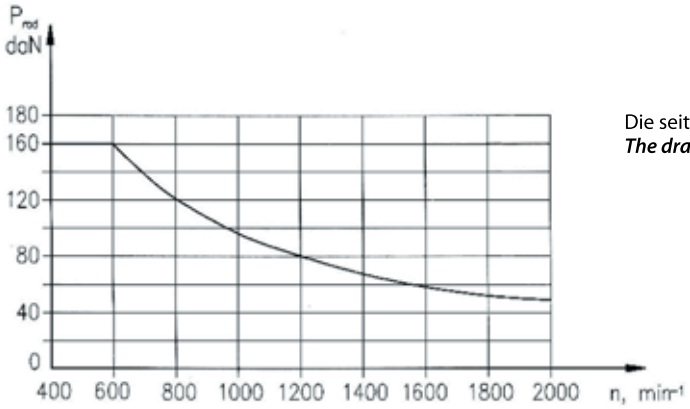

Die seitliche Grafik zeigt den zulässigen Radiallastverlauf bei L=20mm. ***The drawing shows the permissible shaft load when L=20mm***

50% OFF ALL PRICES

Max. Rücklaufdruck ohne Leckölleitung bzw. max. Druck in der Leckölleitung / ***Max. return pressure without drain line or max. pressure in drain line***

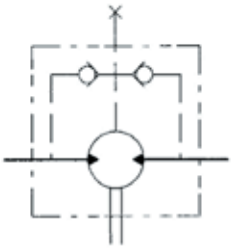

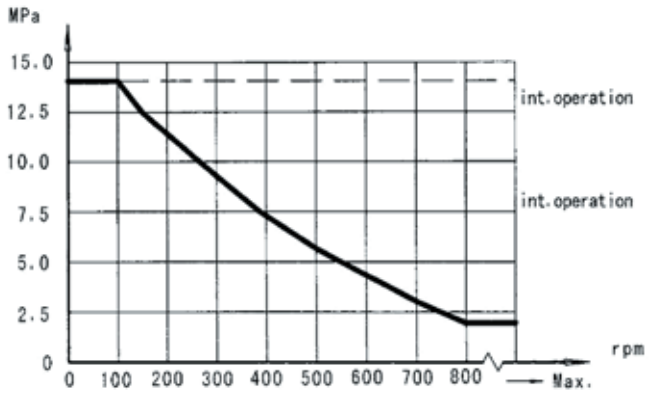

Drehrichtungsauswahl
Rotation selection

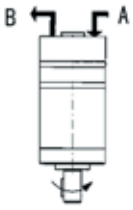

FFMM Endanschluss /
FFMM rear port

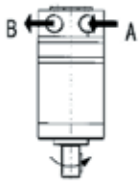

FFMM Seitenanschluss /
FFMM side port

Standardeinstellung:
Drehrichtung rechts, wenn Anschluss A druckbeaufschlagt ist.
Drehrichtung links, wenn Anschluss B druckbeaufschlagt ist.

Standard direction of rotation:
Clockwise when port „A" is pressurized.
Counter-Clockwise when port „B" is pressurized.

Bestellinformationen

	1	2	3	4	5	6	7
FFPMM							

Pos. 1	Montageflansch / *Mounting flange*
Leer / *Omit*	Runder Flansch (3 Schrauben) / *Round flange (3 bolts)*
F	Ovalflansch 2-loch / *Oval mount 2 holes*

Pos. 2	Anschlüsse / Port type
Leer / Omit	Endanschlüsse / *Rear ports*
S	Seitliche Anschlüsse / *Side ports*

Pos. 3	Schluckvolumen / *Displacement*
8	8 cm^3/U / *8 ccm/REV*
12.5	12.5 cm^3/U / *12.5 ccm/REV*
20	20 cm^3/U / *20 ccm/REV*
32	32 cm^3/U / *32 ccm/REV*
40	40 cm^3/U / *40 ccm/REV*
50	50 cm^3/U / *50 ccm/REV*

Order Information

Pos. 4	Wellenausführungen / *Shaft extensions*
C	Ø 16 mm zylindrisch mit Passfeder 5 x 5 x 16 *Ø 16 mm straight with parallel key 5 x 5 x 16*
CO	Ø 15.8 mm (5/8") zylindrisch mit Passfeder 3/16" x 3/16" x 3/4" *Ø 15.8 mm /(5/8") straight with parallel key 3/16" x 3/16" x 3/4"*
HA	Ø15.8 mm (5/8") mit Querloch 4.82 mm / *Ø 15.8 mm (5/8") with cross hole 4.82 mm*
SH	Ø 16.5 mm verzahnt B17 x 14 / *Ø 16.5 mm splined B17 x 14*

Pos. 5	Anschlüsse / *Porting*
Leer / *Omit*	2 x G 3/8", 1 x G 1/8" / *2 x G 3/8", 1 x G 1/8"*
U	2 x 9/16-18 UNF, O-Ring, 1 x 3/8-24 UNF/ *2 x 9/16-18 UNF, O-Ring, 1 x 3/8-24 UNF*

Pos. 6	Farbe / *Painting*
Leer / *Omit*	Grau / *Grey*
RAL...	+ Ralfarbe (z.B. 7021) / *+ Ral colour (e.g. 7021)l*

Pos. 7	Drehrichtung / *Rotation direction*
Leer / *Omit*	Standarddrehrichtung / *Standard Rotation*
R	Umgekehrte Drehrichtung / *Reverse Rotation*

FLOWFIT HYDRAULIC MOTOR PRICE LIST – BUILD YOUR OWN

FFPMM MINI HYDRAULIC MOTOR

STANDARD: OPTIONS INCLUDED FFPMM	PART NUMBER	PRICE
SIDE OR REAR PORTS	FFPMM 8	£115.60
ROUND FLANGE	FFPMM 12.5	£115.60
SHAFT TYPE "C" Ø16 MM	FFPMM 20	£115.60
SHAFT TYPE "CO" Ø15,875 MM	FFPMM 32	£118.19
	FFPMM 40	£120.78
	FFPMM 50	£123.35
OPTIONS: OPTIONAL EXTRAS FFPMM		
SPLINED SHAFT B17 X 14 DIN5482	SH: ADD	£2.57
2 - HOLE FLANGE	F: ADD	£3.85

FLOWFIT HYDRAULIC MOTOR PRICE LIST – COMPLETE

PART NUMBER	DESCRIPTION	PRICE
FFPMM12,5C	HYDRAULIC MOTOR FFPMM12.5C, 12,9 CCM/REV, SHAFT 16MM, G 3/8 INCH, REAR PORTS	£115.60
FFPMM20C	HYDRAULIC MOTOR FFPMM20C, 19,9 CCM/REV, SHAFT 16MM, G3/8 INCH, REAR PORTS	£115.60
FFPMM32C	HYDRAULIC MOTOR FFPMM32C, 31,6 CCM/REV, SHAFT 16MM, G3/8 INCH, REAR PORTS	£118.19
FFPMM32SH	HYDRAULIC MOTOR FFPMM32SH, 31,6 CCM/REV, SPLINED SHAFT 16,5MM 14T., G3/8 INCH, REAR PORTS	£120.77
FFPMM40C	HYDRAULIC MOTOR FFPMM40C, 39,8 CCM/REV, SHAFT 16MM, G 3/8 INCH, REAR PORTS	£120.78
FFPMM40SH	HYDRAULIC MOTOR FFPMM40SH, 39,8 CCM/REV, SPLINED SHAFT 16,5MM 14T., G3/8 INCH, REAR PORTS	£123.35
FFPMM50C	HYDRAULIC MOTOR FFPMM50C, 50,3 CCM/REV, SHAFT 16MM, G 3/8 INCH, REAR PORTS	£123.35
FFPMM8C	HYDRAULIC MOTOR FFPMM8C, 8,2 CCM/REV, SHAFT 16MM, G 3/8 INCH, REAR PORTS	£116.15
FFPMMFS12,5C	HYDRAULIC MOTOR FFPMMFS12,5C, 12,9 CCM/REV, SHAFT 16MM, G 3/8 INCH, OVAL MOUNT, SIDE PORTS	£122.02
FFPMMFS20C	HYDRAULIC MOTOR FFPMMFS20C, 19,9 CCM/REV, SHAFT 16MM, G 3/8 INCH, OVAL MOUNT, SIDE PORTS	£122.02
FFPMMFS32C	HYDRAULIC MOTOR FFPMMFS32C, 31,6 CCM/REV, SHAFT 16MM, G 3/8 INCH, OVAL MOUNT, SIDE PORTS	£124.60
FFPMMFS8C	HYDRAULIC MOTOR FFPMMFS8C, 8,2 CCM/REV, SHAFT 16MM, G 3/8 INCH, OVAL MOUNT, SIDE PORTS	£124.60
FFPMMS12.5C	HYDRAULIC MOTOR FFPMMS12.5C, 12,9 CCM/REV, SHAFT 16MM, G 3/8 INCH, SIDE PORTS	£118.17
FFPMMS20C	HYDRAULIC MOTOR FFPMMS20C, 19,9 CCM/REV, SHAFT 16MM, G 3/8 INCH, SIDE PORTS	£118.17
FFPMMS32C	HYDRAULIC MOTOR FFPMMS32C, 31,6 CCM/REV, SHAFT 16MM, G 3/8 INCH, SIDE PORTS	£120.77
FFPMMS40C	HYDRAULIC MOTOR FFPMMS40C, 39,8 CCM/REV, SHAFT 16MM, G 3/8 INCH, SIDE PORTS	£123.35
FFPMMS50C	HYDRAULIC MOTOR FFPMMS50C, 50,3 CCM/REV, SHAFT 16MM, G 3/8 INCH, SIDE PORTS	£125.92
FFPMMS8C	HYDRAULIC MOTOR FFPMMS8C, 8,2 CCM/REV, SHAFT 16MM, G 3/8 INCH, SIDE PORTS	£118.17

FFPM Hydraulik Motor

- Modell Längsschieberventil
- Kompakte Bauweise
- Ideal für enge Bauräume
- Internes Rückschlagventil
- Verwendung ohne Leckölanschluss möglich
- Hochdruckwellendichtring ist standard

FFPM Hydraulic Motor

- *Spool valve type*
- *Compact design*
- *Optimized for small spaces*
- *Internal check valve*
- *Usage without drain line possible*
- *High pressure seal is standard*

TYP / *Type*		FFPM 50	FFPM 80	FFPM 100	FFPM 125	FFPM 160	FFPM(1) 200	FFPM(2) 200	FFPM(1) 250	FFPM(2) 250	FFPM(1) 315	FFPM(2) 315	FFPM(1) 400	FFPM(2) 400
Schluckvolumen / *Displacement* [cm^3/REV]		51.7	77.7	96.2	117.2	155.5	189.9	189.9	231	231	311.7	311.7	386.2	386.2
Max. Drehzahl / *Max. Speed* [RPM]	Dauerbetrieb / *Cont.*	1180	760	600	485	380	302	302	240	240	190	190	150	150
	Int.(3)	1380	940	750	600	475	380	380	302	302	235	235	190	190
Max. Drehmoment / *Max. Torque* [daNm]	Dauerbetrieb / *Cont.*	9.3	14.9	19	23.4	31	36.4	35.9	45.2	35.1	46.3	34.2	48.2	34.8
	Int.(3)	12	19	23	29	37	45.2	43.5	58.9	46.8	54.3	49.2	55.5	45.4
	Spitze / *Peak* (4)	14	21.9	26.5	36.2	42.6	54.5	54.5	64.2	58.5	70.5	68.4	78.7	68.8
Max. Leistungsabgabe / *Max. Output Power* [kW]	Dauerbetrieb / *Cont.*	10.2	10.1	10.3	10	10	10	9.6	9.4	7.4	7.5	5.6	6.3	4.6
	Int.(3)	12.3	12.3	12.5	12	12	12	12	12	12	9	9	7.8	7.8
Max. Druckgefälle / *Max. Pressure Drop* [bar]	Dauerbetrieb / *Cont.*	140	140	140	140	140	140	135	135	105	115	80	90	65
	Int.(3)	175	175	175	175	175	175	160	175	140	135	115	110	90
	Spitze / *Peak* (4)	210	210	210	210	210	210	210	200	175	175	160	160	140
Max. Ölstrom / *Max. Oil flow* [l/min]	Dauerbetrieb / *Cont*	50	60	60	60	60	60	60	60	60	60	60	60	60
	Int.(3)	60	75	75	75	75	75	75	75	75	75	75	75	75
Max. Eingangsdruck / *Max. Input Pressure* [bar]	Dauerbetrieb / *Cont.*	160	160	160	160	160	160	160	160	160	160	160	160	160
	Int.(3)	175	175	175	175	175	175	175	175	175	175	175	175	175
	Spitze / *Peak* (4)	210	210	210	210	210	210	210	210	210	210	210	210	210
Gewicht / *Weight* [kg]		5.6	5.7	5.9	6.0	6.2	6.4	6.4	6.6	6.6	6.9	6.9	7.4	7.4

(1) FFPM Motor mit CB, SH, K und SB Wellen
(2) FFPM Motor mit C, CO und S Wellen
(3) Intermittierender Betrieb max. 6 Sekunden / Minute
(4) Spitzenbetrieb max. 0,6 Sekunden / Minute

(1) FFPM Motor with CB, SH, K and SB shafts
(2) FFPM Motor with C, CO and S shafts
(3) Intermittend operation rating applies to 6 sec. of every minute
(4) Peak load rating applies to 0,6 sec of every minute

Leistungsdaten

Performance data

FFPM 50 (51.7 cm³/U)

Druck / *pressure* (bar)

Durchflussmenge / ***Oil flow*** (l/min)

	30	60	80	100	125	140 (Max. cont.)	160	175 (Max. Int.)	
8	2.0	4.1	5.6	6.9	8.9	9.5			daNm
	151	**134**	**115**	**90**	**56**	**42**			RPM
15	1.9	4.0	5.6	7.1	9.1	10.0	11.2	12.0	
	286	**274**	**261**	**243**	**204**	**182**	**139**	**102**	
20	1.8	3.9	5.5	7.1	9.2	10.1	11.7	12.8	
	382	**373**	**361**	**348**	**318**	**309**	**287**	**251**	
30	1.7	3.8	5.5	7.1	9.1	9.8	11.6	12.4	
	573	**568**	**558**	**535**	**503**	**488**	**462**	**548**	
35	1.7	3.8	5.4	6.9	8.9	9.8	11.7	12.4	
	670	**661**	**652**	**640**	**606**	**589**	**562**	**548**	
45	1.4	3.6	5.3	6.7	8.8	9.8	11.4	12.3	
	863	**858**	**849**	**837**	**807**	**788**	**764**	**746**	
55	1.2	3.3	5.0	6.5	8.5	9.6	11.1	12.1	
	1055	**1042**	**1028**	**1010**	**979**	**963**	**947**	**920**	
60 (Max. cont.)	1.0	3.2	4.7	6.4	8.3	9.4	10.8	11.9	
	1150	**1143**	**1126**	**1111**	**10799**	**1065**	**1043**	**1015**	
75 (Max. int.)	0.6	2.5	4.2	5.6	7.6	8.7	10.1	11.2	
	1440	**1430**	**1416**	**1395**	**1367**	**1351**	**1335**	**1312**	

FFPM 80 (77.7 cm³/U)

Druck / *pressure* (bar)

Durchflussmenge / ***Oil flow*** (l/min)

	30	60	80	100	125	140 (Max. cont.)	16	175 (Max. Int.)	
8	3.2	6.2	8.5	10.4	12.9	14.4			daNm
	97	**87**	**74**	**55**	**33**	**22**			RPM
15	3.2	6.3	8.4	10.7	12.6	14.4	16.5		
	186	**181**	**170**	**154**	**132**	**118**	**86**		
20	3.1	6.3	8.4	10.7	13.2	14.6	16.8	18.5	
	251	**243**	**236**	**225**	**207**	**196**	**178**	**155**	
30	3.1	6.2	8.3	10.6	13.1	14.6	16.8	18.6	
	281	**379**	**368**	**355**	**332**	**316**	**285**	**263**	
35	3.0	5.9	8.1	10.2	13.0	14.4	16.7	18.5	
	443	**435**	**426**	**415**	**397**	**383**	**361**	**342**	
45	2.5	5.8	7.9	10.0	12.6	14.2	16.5	18.2	
	570	**564**	**554**	**543**	**526**	**509**	**483**	**458**	
55	2.3	5.7	7	9.7	12.4	14.0	16.1	17.9	
	696	**685**	**672**	**656**	**643**	**630**	**602**	**579**	
60 (Max. cont.)	2.0	5.3	7.5	9.4	12.0	13.7	16.0	17.7	
	761	**753**	**744**	**736**	**720**	**706**	**681**	**660**	
75 (Max. int.)	1.4	4.4	6.7	8.7	11.2	15.1	16.9	16.9	
	948	**940**	**931**	**920**	**906**	**890**	**871**	**854**	

FFPM 100 (96.2 cm³/U)

Druck / *pressure* (bar)

Durchflussmenge / ***Oil flow*** (l/min)

	30	60	80	100	125	140 (Max. cont.)	160	175 (Max. Int.)	
8	4.0	7.7	10.5	13.0	16.1	18.0			daNm
	81	**75**	**69**	**57**	**36**	**24**			RPM
15	3.9	7.7	10.6	13.0	16.0	18.0	20.8		
	152	**149**	**145**	**140**	**122**	**103**	**881**		
20	3.6	7.4	10.4	12.8	16.1	17.9	20.5	22.7	
	204	**200**	**1955**	**190**	**177**	**166**	**148**	**133**	
30	3.3	7.2	10.3	12.5	16.0	17.7	20.3	22.5	
	308	**304**	**298**	**290**	**280**	**268**	**255**	**231**	
35	3.0	7.0	9.8	12.2	15.9	17.6	20.2	22.4	
	360	**352**	**343**	**331**	**320**	**306**	**294**	**275**	
45	2.9	6.7	9.5	11.8	1.5	17.4	20.0	22.0	
	462	**458**	**451**	**443**	**433**	**419**	**402**	**383**	
55	2.5	6.4	9.3	11.6	15.2	17.0	19.8	21.7	
	566	**558**	**549**	**540**	**529**	**515**	**498**	**478**	
60 (Max. cont.)	2.2	6.0	9.1	11.4	14.9	16.7	19.4	21.3	
	618	**611**	**601**	**589**	**580**	**5770**	**558**	**540**	
75 (Max. int.)	1.5	5.4	8.3	10.6	14.1	16.0	18.6	20.5	
	771	**763**	**755**	**744**	**735**	**724**	**708**	**693**	

50% OFF ALL PRICES

Leistungsdaten

Performance data

FFPM 125 (120.2 cm³/U)

Druck / *pressure* (bar)

Durchflussmenge / *Oil flow* (l/min)	30	60	80	100	125	140 (Max. cont.)	160	175 (Max. Int.)	
8	5.1	9.8	13.7	16.8	20.8	23.6			daNm
	63	**60**	**55**	**47**	**28**	**15**			RPM
15	5.1	10.1	13.8	16.8	20.9	23.6	26.7		
	121	**116**	**110**	**102**	**89**	**73**	**48**		
20	4.8	9.8	13.5	16.7	21.1	23.7	26.9	29.0	
	162	**158**	**153**	**148**	**137**	**128**	**109**	**94**	
30	4.6	9.6	13.2	16.4	20.9	23.2	26.4	28.7	
	243	**239**	**234**	**227**	**216**	**202**	**189**	**176**	
35	4.2	9.2	13.0	16.0	20.6	22.9	26.0	28.4	
	284	**279**	**274**	**269**	**259**	**247**	**231**	**222**	
45	3.7	8.9	12.5	15.7	20.1	22.4	26.1	28.1	
	370	**362**	**355**	**348**	**340**	**327**	**310**	**296**	
55	3.3	8.4	12.2	15.2	19.6	21.8	25.2	27.5	
	452	**446**	**438**	**4431**	**420**	**412**	**402**	**384**	
60 (Max. cont.)	2.9	7.8	11.7	14.6	19.1	21.5	24.8	27.2	
	490	**482**	**475**	**468**	**459**	**448**	**439**	**427**	
75 (Max. int.)	1.8	6.6	10.7	13.3	17.9	20.2	23.6	26.0	
	615	**606**	**598**	**586**	**575**	**563**	**549**	**528**	

FFPM 160 (157.2 cm³/U)

Druck / *pressure* (bar)

Durchflussmenge / *Oil flow* (l/min)	30	60	80	100	125	140 (Max. cont.)	160	175 (Max. Int.)	
8	6.2	12.0	17.0	21.2	26.3	29.0			daNm
	49	**48**	**46**	**42**	**26**	**14**			RPM
15	6.0	12.2	17.2	21.5	26.4	29.4	34.0		
	93	**91**	**88**	**85**	**76**	**68**	**48**		
20	5.7	12.0	17.0	21.4	26.2	29.0	34.0	37.1	
	125	**123**	**120**	**117**	**110**	**106**	**92**	**81**	
30	5.3	11.5	16.4	20.6	25.9	28.8	33.5	36.8	
	187	**184**	**181**	**178**	**175**	**168**	**155**	**139**	
35	4.9	11.0	16.0	20.2	25.5	28.4	32.8	36.2	
	220	**216**	**213**	**209**	**205**	**202**	**192**	**176**	
45	4.4	10.2	15.4	19.6	24.8	27.8	32.1	35.8	
	283	**280**	**276**	**272**	**267**	**260**	**250**	**238**	
55	4.0	9.9	14.8	19.1	24.3	27.2	31.6	35.1	
	345	**342**	**340**	**336**	**331**	**328**	**320**	**303**	
60 (Max. cont.)	3.3	9.4	14.4	18.8	23.6	26.7	30.8	34.5	
	377	**374**	**371**	**367**	**363**	**359**	**353**	**342**	
75 (Max. int.)	1.9	8.0	12.4	17.0	21.6	25.2	29.6	32.5	
	473	**469**	**465**	**459**	**453**	**447**	**440**	**424**	

FFPM 200 (194.5 cm³/U)

Druck / *pressure* (bar)

Durchflussmenge / *Oil flow* (l/min)	30	60	80	100	125	140 (Max. cont.)	16	175 (Max. Int.)	
8	7.9	16.4	20.7	25.0	32.0	36.0			daNm
	40	**39**	**38**	**35**	**28**	**22**			RPM
15	7.8	16.2	20.5	25.0	33.2	36.1	41.0		
	76	**75**	**74**	**71**	**66**	**61**	**51**		
20	7.6	15.8	20.3	24.7	32.0	35.8	40.3	42.2	
	100	**98**	**97**	**95**	**92**	**89**	**73**	**57**	
30	7.0	15.3	20.0	24.5	31.5	35.0	39.8	41.7	
	151	**149**	**147**	**145**	**142**	**139**	**131**	**120**	
35	6.6	14.9	19.4	23.2	29.7	34.3	38.6	41.5	
	177	**175**	**173**	**171**	**168**	**166**	**160**	**149**	
45	6.3	14.6	19.0	23.0	29.4	30.4	38.3	41.0	
	228	**226**	**224**	**221**	**218**	**215**	**210**	**198**	
55	5.4	14.0	18.1	22.4	28.6	33.4	37.1	40.0	
	280	**278**	**276**	**274**	**271**	**269**	**263**	**250**	
60 (Max. cont.)	3.8	12.7	16.4	21.2	27.0	32.5	35.6	39.5	
	304	**302**	**300**	**297**	**294**	**291**	**286**	**272**	
75 (Max. int.)	2.2	9.6	14.5	19.2	23.5	29.3	32.1	36.7	
	382	**378**	**374**	**371**	**368**	**364**	**360**	**350**	

Leistungsdaten

Performance data

FFPM 250 (240.3 cm³/U)

Druck / *pressure* (bar)

Durchflussmenge / *Oil flow* (l/min)	30	60	80	100	125	140 (Max. cont.)	160	175 (Max. Int.)	
8	9.6	19.0	26.8	32.6	40.3				daNm
	30	**28**	**24**	**21**	**11**				RPM
15	98	194	270	32.7	40.5	45.0	51.0		
	60	**58**	**54**	**50**	**40**	**30**	**12**		
20	9.2	18.8	26.7	32.5	40.5	45.6	51.4	56.5	
	82	**80**	**77**	**76**	**69**	**64**	**52**	**38**	
30	8.5	18.0	25.9	32.0	40.0	44.8	51.3	56.1	
	123	**120**	**118**	**114**	**106**	**98**	**87**	**76**	
35	7.7	17.6	25.2	31.1	38.9	43.6	50.4	55.7	
	143	**141**	**139**	**135**	**128**	**122**	**112**	**101**	
45	7.0	16.8	24.3	30.0	37.7	42.8	49.5	54.3	
	185	**182**	**178**	**174**	**168**	**161**	**152**	**139**	
55	6.3	15.9	23.7	29.0	36.9	41.7	48.3	53.1	
	226	**223**	**218**	**213**	**209**	**202**	**193**	**185**	
Max. cont. 60	6.0	15.0	22.8	28.0	35.8	40.7	47.3	52.0	
	248	**26**	**243**	**239**	**233**	**2226**	**215**	**207**	
Max. int. 75	3.4	12.8	20.2	26.4	34.2	38.7	44.8	48.8	
	309	**306**	**302**	**297**	**292**	**286**	**278**	**264**	

FFPM 315 (314.5 cm³/U)

Druck / *pressure* (bar)

Durchflussmenge / *Oil flow* (l/min)	30	60	70	90	100	125 (Max. cont.)	140 (Max. Int.)	
8	12.3	21.5	29.2	36.8	40.5			daNm
	25	**23**	**21**	**17**	**11**			RPM
15	11.8	21.1	28.7	36.7	40.4	49.5	56.8	
	47	**46**	**44**	**40**	**28**	**21**	**10**	
20	11.0	20.5	27.8	36.0	39.5	49.4	56.6	
	62	**61**	**60**	**57**	**46**	**40**	**36**	
30	10.1	19.6	27.1	34.9	38.8	49.0	56.5	
	94	**93**	**91**	**88**	**76**	**68**	**65**	
35	9.6	18.8	26.4	34.1	38.2	47.8	55.7	
	109	**107**	**106**	**104**	**96**	**89**	**84**	
45	8.9	18.0	25.4	33.7	37.2	46.8	55.3	
	141	**140**	**138**	**135**	**127**	**120**	**115**	
55	7.6	16.6	23.9	32.5	36.2	45.7	54.8	
	173	**172**	**170**	**167**	**160**	**152**	**143**	
Max. cont. 60	6.5	15.4	22.7	30.8	34.8	44.3	52.9	
	188	**186**	**184**	**182**	**178**	**172**	**163**	
Max. int. 75	4.0	12.0	20.1	27.9	32.3	41.8	49.7	
	236	**234**	**232**	**228**	**226**	**223**	**214**	

FFPM 400 (386.2 cm³/U)

Druck / *pressure* (bar)

Durchflussmenge / *Oil flow* (l/min)	30	45	55	65	80	100 (Max. cont.)	125 (Max. Int.)	
8	16.6	23.2	28.7	34.0	41.8			daNm
	20	**19**	**18**	**16**	**12**			RPM
15	16.5	22.8	27.7	33.7	41.7	49.6	61.2	
	38	**36**	**35**	**33**	**31**	**27**	**21**	
20	16.2	22.3	27.3	33.1	41.3	49.5	60.8	
	50	**49**	**49**	**48**	**45**	**41**	**35**	
30	15.4	21.6	26.6	31.8	40.5	48.6	60.0	
	76	**75**	**74**	**73**	**71**	**67**	**60**	
35	14.6	21.0	25.6	31.2	39.5	48.0	58.8	
	88	**87**	**87**	**86**	**83**	**80**	**75**	
45	13.2	19.7	24.3	30.0	38.3	46.4	57.6	
	114	**113**	**112**	**110**	**108**	**106**	**99**	
55	11.7	18.4	22.7	28.3	36.3	45.0	55.2	
	139	**137**	**136**	**135**	**135**	**132**	**123**	
Max. cont. 60	10.2	16.3	21.5	27.2	34.7	43.6	53.2	
	153	**152**	**150**	**148**	**146**	**143**	**138**	
Max. int. 75	5.3	12.8	18.2	23.4	31.8	39.1	48.4	
	191	**189**	**187**	**185**	**183**	**180**	**176**	

50% OFF ALL PRICES

Abmessungen

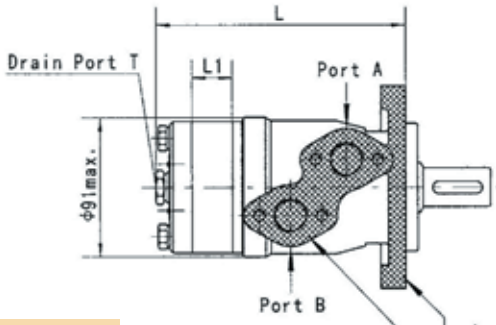

Anschlüsse / *Porting*

Seitenanschluss / ***Side Ports***

Version G M U P

Anschluss A / ***Port A***

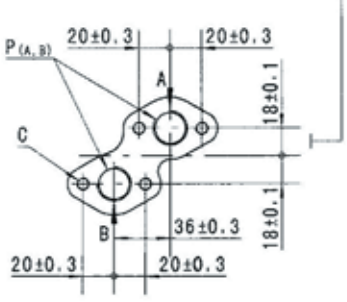

Anschluss B / ***Port B***

E Endanschluss auf Anfrage / ***Rear Ports on request***

An-schluss / *Port*	Versionen / *Versions*			
	Leer / *Omit*	M	U	P
P(A,B)	2 x G ½"	2 x M22 x 1,5	7/8-14 O-Ring	2 x ½ NPTF
T	G ¼"	M14	7/16-20UNF	7/16-20UNF
C	4 x M8	4 x M8	5/16-18 UNC	5/16-18 UNC

Dimensions

Anbaumaße / *Mounting*

Ovalflansch / ***Oval Mount*** SAE A (2-Loch) / ***2 holes***

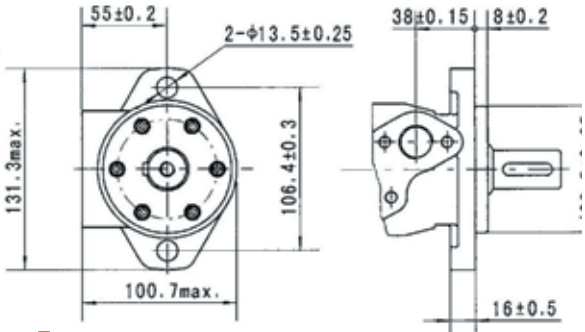

F Magneto Flansch / ***Magneto Mount*** (4-Loch / ***4 holes***)

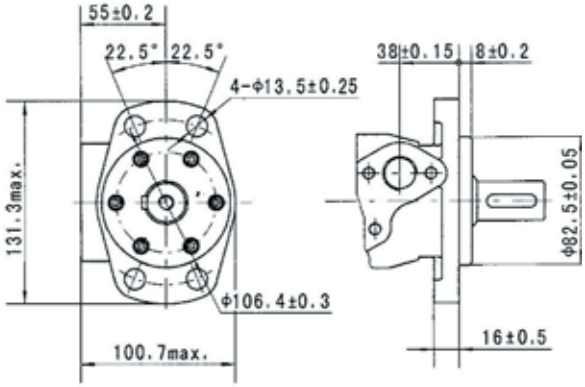

Q Quadratflansch / ***Square flange*** (4 Schrauben / ***4 bolts***)

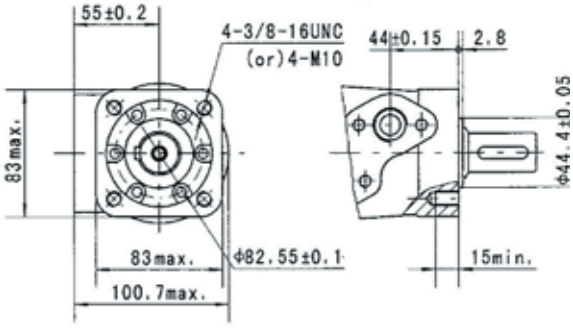

Typ / *Type*	L	L1	Typ / *Type*	L	L1
FFPM(F) 50	137	7	FFPMQ 50	143	7
FFPM(F) 80	140.5	10.5	FFPMQ 80	146.5	10.5
FFPM(F) 100	143	13	FFPMQ 100	149	13
FFPM(F) 125	146	16	FFPMQ 125	152	16
FFPM(F) 160	151	21	FFPMQ 160	157	21
FFPM(F) 200	157	26	FFPMQ 200	163	26
FFPM(F) 250	162	32	FFPMQ 250	168	32
FFPM(F) 315	172	42	FFPMQ 315	178	42
FFPM(F) 400	182	52	FFPMQ 400	188	52

Abmessungen FFPMW

Radmontage /

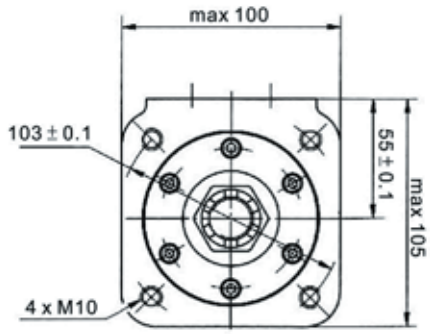

Typ / *Type*	L	L1
FFPMW(N) 50	81	7
FFPMW(N) 80	84.5	10.5
FFPMW(N) 100	87	13
FFPMW(N) 125	90	16
FFPMW(N) 160	95	21
FFPMW(N) 200	100	26
FFPMW(N) 250	106	32
FFPMW(N) 315	116	42
FFPMW(N) 400	126	52

An-schluss / *Port*	Versionen / *Versions*			
	Leer / *Omit*	M	U	P
P(A,B)	2 x G ½"	2 x M22 x 1,5	⅞-14 O-Ring	2 x ½ NPTF
T	G ¼"	M14	7/16-20UNF	7/16-20UNF

Dimensions FFPMW

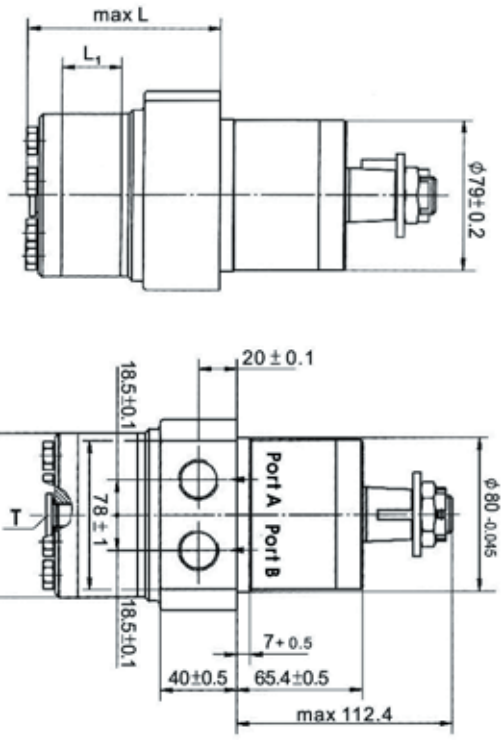

Radiallast / *Shaft Load*

FFPMWN

Die Kurven basieren auf einer B10 Lebensdauer von 2000 Stunden
The curves apply to a B10 bearing life of 2000 hours

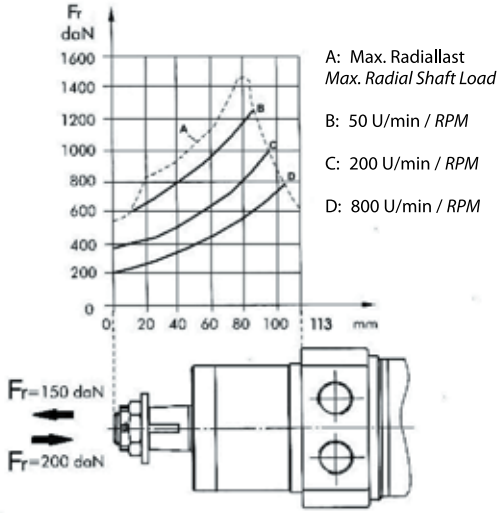

A: Max. Radiallast
Max. Radial Shaft Load

B: 50 U/min / *RPM*

C: 200 U/min / *RPM*

D: 800 U/min / *RPM*

FFPMW

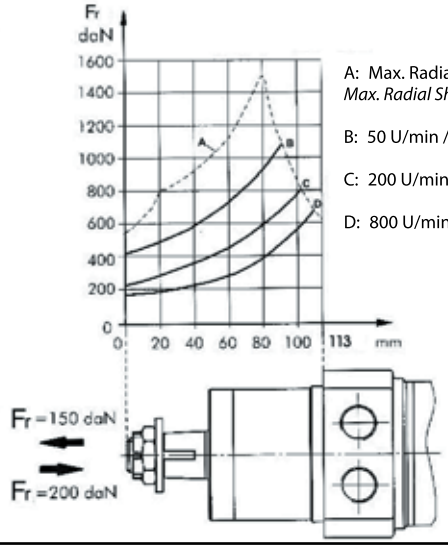

A: Max. Radiallast
Max. Radial Shaft Load

B: 50 U/min / *RPM*

C: 200 U/min / *RPM*

D: 800 U/min / *RPM*

50% OFF ALL PRICES

Abtriebswellen

C - Ø 25 mm zylindrisch mit Passfeder A8 x 7 x 32. Max. Drehmoment: 34 daNm / ***Ø 25 mm straight, parallel key A8 x 7 x 32. Max. torque: 34 daNm***

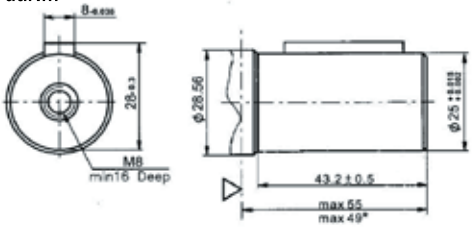

CO - Ø 25.4 mm (1") zylindrisch mit Passfeder ¼" x ¼" x 1¼". Max. Drehmoment: 34 daNm / ***Ø 25.4 mm (1") straight, parallel key ¼" x ¼" x 1¼". Max. torque: 34 daNm***

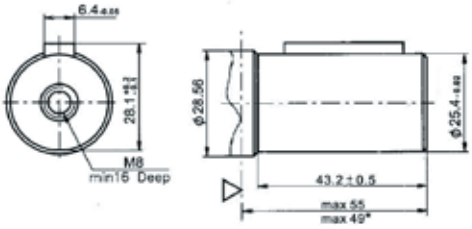

C1 - Ø 1¼" zylindrisch mit Passfeder 5/16" x 5/16" x 1¼". Max. Drehmoment: 77 daNm / ***Ø 1¼" straight, parallel key 5/16" x 5/16" x 1¼". Max. torque: 77 daNm***

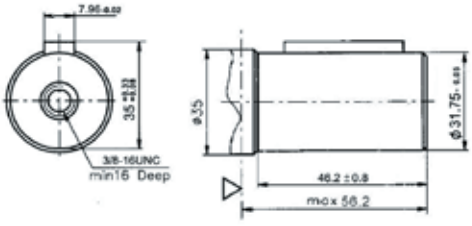

S - Ø 31.75 (1 ¼") verzahnt, 14 Zähne, DP 12/24. Max. Drehmoment: 77 daNm / ***Ø 31.75 (1¼") splined, 14T, DP 12/24. Max. torque: 77 daNm***

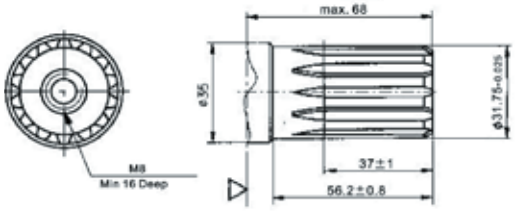

HA - cyl. Ø25.4 mm mit Querloch 8 mm / ***cyl. 25.4 mm with cross hole 8 mm***

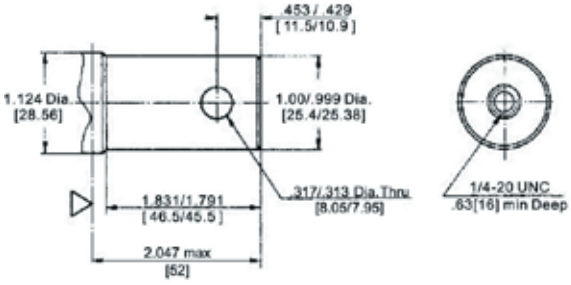

Output shafts

CB - Ø 32 mm zylindrisch mit Passfeder A10 x 8 x 45. Max. Drehmoment: 77 daNm / ***Ø 32 mm straight, parallel key A10 x 8 x 45. Max. torque: 77 daNm***

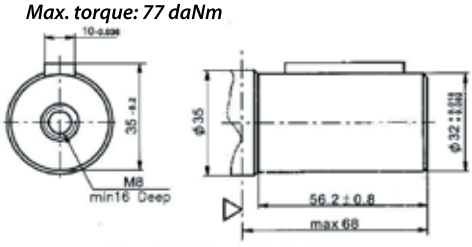

SH - verzahnt (SAE 6B). Max. Drehmoment: 40 daNm / ***splined, (SAE 6B), Max. torque: 77 daNm***

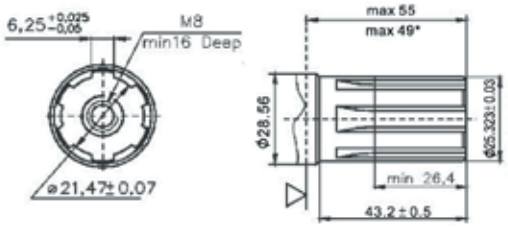

KA - kon. 1:8, SAE J 501, mit Passfeder 5/16" x 5/16" x 1¼". Max. Drehmoment: 77 daNm / ***conical 1:8, SAE J 501, parallel key 5/16" x 5/16" x 1¼". Max. torque: 77 daNm***

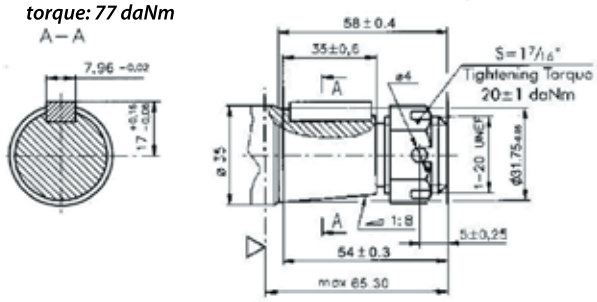

SB - verzahnt 14 Zähne, DP 12/24. Max. Drehmoment: 77 daNm / ***splined, 14 T, DP 12/24, Max. torque: 77 daNm***

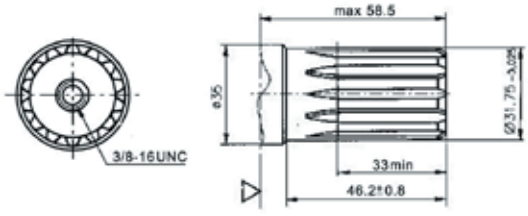

K - kon. 1:10 mit Passfeder B5 x 5 x 14. Max. Drehmoment: 40 daNm / ***conical 1:10, parallel key B5 x 5 x 14. Max. torque: 40 daNm***

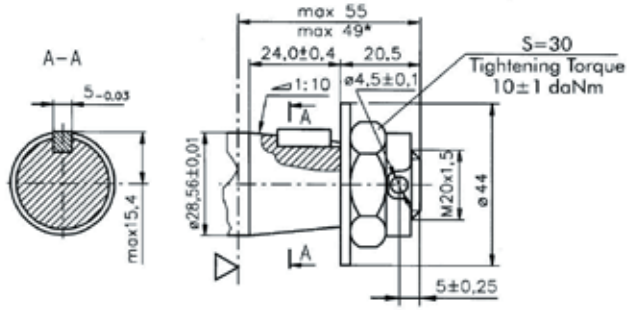

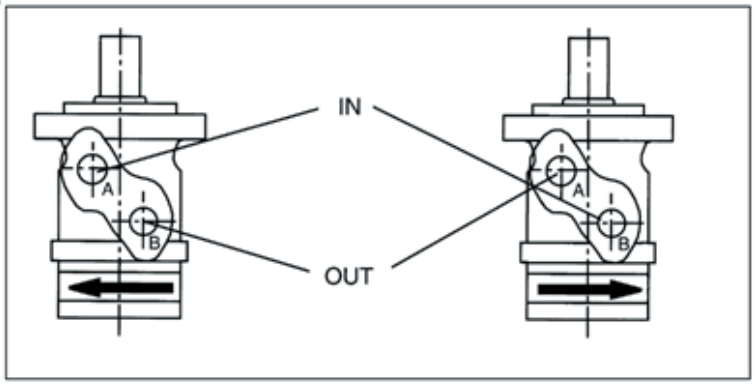

Drehrichtungsauswahl
Rotation selection

Standardeinstellung:
Drehrichtung rechts, wenn Anschluss A druckbeaufschlagt ist.
Drehrichtung links, wenn Anschluss B druckbeaufschlagt ist.

Standard direction of rotation:
Clockwise when port „A" is pressurized.
Counter-Clockwise when port „B" is pressurized.

Max. Rücklaufdruck ohne Leckölleitung bzw. max. Druck in der Leckölleitung / ***Max. return pressure without drain line or max. pressure in drain line***

Drehzahl/ *RPM*	Dauerdruck / *cont. Pressure* (bar)
0-100	75
100-300	50
300-1000	25

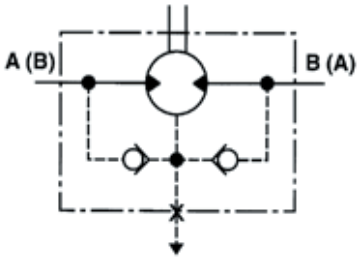

Leckölanschluss / ***Drain Line***

Max. Rücklaufdruck mit Leckölleitung / ***Max. return pressure with drain line***

Dauerbetrieb / *Continuous*	160 bar
Kurzzeitig / *Intermittent*	175 bar
Spitze / *Peak*	210 bar

Wellenbelastung
Shaft Load

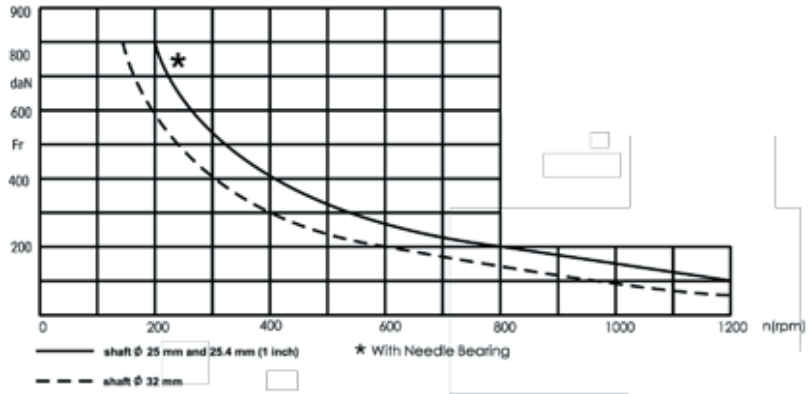

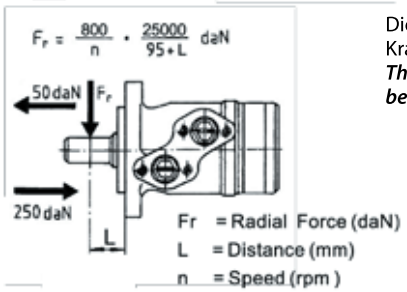

Die zulässige Radiallast berechnet sich aus dem Abstand L zwischen Kraftangriffspunkt und der Montagefläche des Flansches /
The permissible radial shaft load is calculated from the distance L between the point load application and the mounting surface:

50% OFF ALL PRICES

Bestellinformationen

	1	2	3	4	5	6	7	8	9
FFPM									

Pos. 1	Montageflansch / *Mounting flange*
Leer / *Omit*	Ovalflansch 2-loch, SAE A / *Oval mount 2-holes SAE A*
F	Magnetoflansch 4-loch / *Magneto mount 4 holes*
Q	Quadratflansch, 4-loch / *Square flange 4 holes*
W	Radflansch / *Wheel mount*

Pos. 2	Lageroptionen / *Bearing options*
Leer / *Omit*	Standard / *None*
N	Nadellager / *Needle bearing*

Pos. 3	Anschlüsse / Port type
Leer / Omit	Seitl. Anschlüsse / *Side ports*
E	Endanschlüsse (auf Anfrage) / *Rear ports (on request)*

Pos.4	Schluckvolumen / *Displacement*
50	50 cm^3/U / *50 ccm/REV*
80	80 cm^3/U / *80 ccm/REV*
100	100 cm^3/U / *100 ccm/REV*
125	125 cm^3/U / *125 ccm/REV*
160	160 cm^3/U / *160 ccm/REV*
200	200 cm^3/U / *200 ccm/REV*
250	250 cm^3/U / *250 ccm/REV*
315	315 cm^3/U / *315 ccm/REV*
400	400 cm^3/U / *400 ccm/REV*

Pos. 5	Wellenausführungen / *Shaft extensions*
C	Ø25 mm zylindrisch mit Passfeder A8 x 7 x 28 *Ø25 mm straight with parallel key A8 x 7 x 28*
CO	Ø1" (25.4 mm) zylindrisch mit Passfeder ¼" x ¼" x ¼" *Ø1" (25.4 mm) straight with parallel key ¼" x ¼" x ¼"*
HA	cyl. Ø25.4 mm mit Querloch 8 mm / *cyl. 25.4 mm with cross hole 8 mm*

Order Information

S	Ø 31.75 mm (1 ¼") verzahnt, 14 Zähne, DP 12/24 / *Ø 31.75 mm (1¼") splined, 14T, DP 12/24.*
SH	Ø25.32 mm verzahnt (SAE 6B) / *Ø25.32 mm splined (SAE 6B)*
KA	Konisch 1:8 SAE, J501 mit Passfeder 5/16" x 5/16" x 1 ¼" *Conical 1:8 SAE, J501 with key 5/16" x 5/16" x 1 ¼"*
C1	Ø1 1/4" zylindrisch mit Paßfeder 5/16" x 5/16" x 1 ¼" *Ø1 1/4" straight with key 5/16" x 5/16" x 1 ¼"*
CB	Ø32 mm zylindrisch mit Paßfeder A10 x 8 x 45 *Ø32 mm straight with key A10 x 8 x 45*
SB	Verzahnt 14 Zähne, DP 12/24 / *splined, 14 T, DP 12/24*
K	Konisch 1:10 mit Passfeder B5 x 5 x 14 *Conical 1:10 with key B5 x 5 x 14*

Pos. 6	Wellendichtung / *Shaft seal*
D	Hochdruckwellendichtung bis 150 bar (standard) *High Pressure Seal up to 150 bar (standard)*
U	Hochdruckwellendichtung 200 bar *High Pressure Seal 200 bar*

Pos. 7	Anschlüsse / *Porting*
Leer / *Omit*	G ½" / *G ½"*
M	Metrisch / *Metric*
U	7/8-14 UNF, O-Ring / *7/8-UNF, O-ring*
P	½-14 NPTF / *½-14 NPTF*

Pos. 8	Farbe / *Painting*
Leer / *Omit*	Grau / *Grey*
RAL...	+ Ralfarbe (z.B. 7021) / *+ Ral colour (e.g. 7021)I*

Pos. 9	Drehrichtung / *Rotation direction*
Leer / *Omit*	Standarddrehrichtung / *Standard Rotation*
R	Umgekehrte Drehrichtung / *Reverse Rotation*

FLOWFIT HYDRAULIC MOTOR PRICE LIST – BUILD YOUR OWN

FFPM HYDRAULIC MOTOR

STANDARD: OPTIONS INCLUDED FFPM	PART NUMBER	PRICE
SIDE PORTS: 2 X G 1/2" (BSP)	FFPM 50	£117.03
SHAFT T YPE"C" Ø 25MM	FFPM 80	£119.79
SHAFT T YPE"CO" Ø 25,4MM	FFPM 100	£122.65
SHAFTTYPE "H", "HA" ODER / OR "HB"	FFPM 125	£125.39
TYPE WITH CROSS HOLE Ø 25,4MM	FFPM 160	£129.68
SPLINEDT YPE SAE 6B	FFPM 200	£133.74
	FFPM 250	£138.03
FLANGE SAE "A" 2 BOLTS	FFPM 315	£141.01
	FFPM 400	£145.45
OPTIONAL EXTRAS: SHAFT OPTION EXTRAS FFPM		
SHAFT Ø 32 MM	CB : ADD	£3.20
SPLINED SHAFT 1 1/4" 14T	SB : ADD	£5.33
TAPERED KEY SHAFT 1:10 (B5 X 5 X 14)	T ; ADD	£4.27
TAPERED KEY SHAFT 1:8 (SAE J 501)	TA : ADD	£4.27
SHAFT SEAL FOR DRAIN 150 BAR	D: ADD	£8.54
NEEDLE BEARING	N : ADD	£10.68
FLANGE OPTIONS EXTRAS FFPM		
4 HOLE FLANGE SAE A	F: ADD	£3.20
SQUARE FLANGE	Q : ADD	£4.27
WHEEL FLANGE	W :ADD	£15.37
PROTECTION CAP	P: ADD	£12.82
REAR PORTS	E; : ADD	£5.33
SEAL KIT FFPM		£20.29
NEGATIVE DISK BRAKE FOR FFPM MOTORS : FFLB/ 288-7	14,21,32,43,63	£253.30

FLOWFIT HYDRAULIC MOTOR PRICE LIST – COMPLETE

PART NUMBER	DESCRIPTION	PRICE
FFPM100CB	HYDRAULIC MOTOR FFPM100CB, 98,6 CCM/REV, SHAFT 32MM, 2-HOLE SAE A, G 1/2 INCH, HPS	£125.83
FFPM100CD	HYDRAULIC MOTOR FFPM100CD, 98,6 CCM/REV, SHAFT 25MM, 2-HOLE SAE A, G 1/2 INCH, HPS	£131.20
FFPM100COD	HYDRAULIC MOTOR FFPM100COD, 98,6 CCM/REV, SHAFT 25,4MM, 2-HOLE SAE A, G 1/2 INCH, HPS	£131.20
FFPM100SHD	HYDRAULIC MOTOR FFPM100SHD, 98,6 CCM/REV, SPLINED SHAFT SAE 6B, 2-HOLE SAE A, G 1/2 INCH, HPS	£131.20
FFPM125CB	HYDRAULIC MOTOR FFPM125CB, 123,5 CCM/REV, SHAFT 32MM, 2-HOLE SAE A, G 1/2 INCH	£128.59
FFPM125CD	HYDRAULIC MOTOR FFPM125CD, 123,5 CCM/REV, SHAFT 25MM, 2-HOLE SAE A, G 1/2 INCH, HPS	£133.93
FFPM125COD	HYDRAULIC MOTOR FFPM125CD, 123,5 CCM/REV, SHAFT 25,4MM, 2-HOLE SAE A, G 1/2 INCH, HPS	£133.93
FFPM125SHD	HYDRAULIC MOTOR FFPM125SHD, 123,5 CCM/REV, SPLINED SHAFT SAE 6B, 2-HOLE SAE A, G 1/2 INCH	£133.93
FFPM160CB	HYDRAULIC MOTOR FFPM160CB, 158,6 CCM/REV, SHAFT 32MM, 2-HOLE SAE A, G 1/2 INCH, HPS	£132.89
FFPM160CD	HYDRAULIC MOTOR FFPM160CD, 158,6 CCM/REV, SHAFT 25MM, 2-HOLE SAE A, G 1/2 INCH, HPS	£138.23
FFPM160COD	HYDRAULIC MOTOR FFPM160CD, 158,6 CCM/REV, SHAFT 25,4MM, 2-HOLE SAE A, G 1/2 INCH, HPS	£138.23
FFPM160SHD	HYDRAULIC MOTOR FFPM160SHD, 158,6 CCM/REV, SPLINED SAE 6B, 2-HOLE SAE A, G 1/2 INCH, G1/2"	£138.23
FFPM200CB	HYDRAULIC MOTOR FFPM200CB, 197,9 CCM/REV, SHAFT 32MM, 2-HOLE SAE A, G 1/2 INCH, HPS	£136.94
FFPM200CD	HYDRAULIC MOTOR FFPM200CD, 197,9 CCM/REV, SHAFT 25MM, 2-HOLE SAE A, G 1/2 INCH, HPS	£143.09
FFPM200COD	HYDRAULIC MOTOR FFPM200COD, 197,9 CCM/REV, SHAFT 25,4MM, 2-HOLE SAE A, G 1/2 INCH, HPS	£143.09
FFPM200SHD	HYDRAULIC MOTOR FFPM200SHD, 197,9 CCM/REV, SPLINED SHAFT SAE 6B, 2-HOLE SAE A, G 1/2 INCH, HPS	£143.09
FFPM250CB	HYDRAULIC MOTOR FFPM250CB, 247,5 CCM/REV, SHAFT 32MM, 2-HOLE SAE A, G 1/2 INCH, G 1/2"	£141.22
FFPM250CD	HYDRAULIC MOTOR FFPM250CD, 247,5 CCM/REV, SHAFT 25MM, 2-HOLE SAE A, G 1/2 INCH, HPS	£146.57
FFPM250COD	HYDRAULIC MOTOR FFPM250COD, 247,5 CCM/REV, SHAFT 25,4MM, 2-HOLE SAE A, G 1/2 INCH, HPS	£146.57
FFPM250SHD	HYDRAULIC MOTOR FFPM250SHD, 247,5 CCM/REV, SPLINED SHAFT SAE 6B, 2-HOLE SAE A, G 1/2 INCH	£146.57
FFPM315CB	HYDRAULIC MOTOR FFPM315CB, 316,5 CCM/REV, SHAFT 32MM, 2-HOLE SAE A, G 1/2 INCH, HPS	£144.21
FFPM315CD	HYDRAULIC MOTOR FFPM315CD, 316,5 CCM/REV, SHAFT 25MM, 2-HOLE SAE A, G 1/2 INCH, HPS	£149.56
FFPM315COD	HYDRAULIC MOTOR FFPM315COD, 316,5 CCM/REV, SHAFT 25,4MM, 2-HOLE SAE A, G 1/2 INCH, HPS	£149.56
FFPM315SHD	HYDRAULIC MOTOR FFPM315SHD, 316,5 CCM/REV, SPLINED SHAFT SAE 6B, 2-HOLE SAE A, G 1/2 INCH, HPS	£149.56
FFPM400CB	HYDRAULIC MOTOR FFPM400CB, 396,5CCM/REV, SHAFT 32MM, 2-HOLE SAE A, G 1/2 INCH, HPS	£148.67
FFPM400CD	HYDRAULIC MOTOR FFPM400CD, 396,5 CCM/REV, SHAFT 25MM, 2-HOLE SAE A, G 1/2 INCH, HPS	£154.01
FFPM400COD	HYDRAULIC MOTOR FFPM400COD, 396,5 CCM/REV, SHAFT 25,4MM, 2-HOLE SAE A, G 1/2 INCH, HPS	£154.01
FFPM400SHD	HYDRAULIC MOTOR FFPM400SHD, 396,5 CCM/REV, SPLINED SHAFT SAE 6B, 2-HOLE SAE A, G 1/2 INCH, HPS	£154.01
FFPM50CB	HYDRAULIC MOTOR FFPM50CB, 51,2 CCM/REV, SHAFT 32MM, 2-HOLE SAE A, G 1/2 INCH	£120.23
FFPM50CD	HYDRAULIC MOTOR FFPM50CD, 51,2 CCM/REV, SHAFT 25MM, 2-HOLE SAE A, G 1/2 INCH, HPS	£125.58
FFPM50COD	HYDRAULIC MOTOR FFPM50COD, 51,2 CCM/REV, SHAFT 25,4MM, 2-HOLE SAE A, G 1/2 INCH, HPS	£125.58
FFPM50SHD	HYDRAULIC MOTOR FFPM50SHD, 51,2 CCM/REV, SPLINED SHAFT SAE 6B, 2-HOLE SAE A, G 1/2 INCH, HPS	£125.58
FFPM80CB	HYDRAULIC MOTOR FFPM80CB, 78,8 CCM/REV, SHAFT 32MM, 2-HOLE SAE A, G 1/2 INCH	£122.98

50% OFF ALL PRICES

HYDRAULIC MOTOR PRICE LIST – COMPLETE

PART NUMBER	DESCRIPTION	PRICE
FFPM80CD	HYDRAULIC MOTOR FFPM80CD, 78,8 CCM/REV, SHAFT 25MM, 2-HOLE SAE A, G 1/2 INCH, HPS	£128.33
FFPM80COD	HYDRAULIC MOTOR FFPM80CD, 78,8 CCM/REV, SHAFT 25,4MM, 2-HOLE SAE A, G 1/2 INCH, HPS	£128.33
FFPM80SHD	HYDRAULIC MOTOR FFPM80SHD, 78,8 CCM/REV, SPLINED SHAFT SAE 6B, 2-HOLE SAE A, G 1/2 INCH, HPS	£128.33
FFPMF100CB	HYDRAULIC MOTOR FFPMF100CB, 396,5CCM/REV, SHAFT 32MM, 4-HOLE SAE A, G 1/2 INCH, HPS	£129.04
FFPMF100CD	HYDRAULIC MOTOR FFPMF100CD, 98,6 CCM/REV, SHAFT 25MM, 4-HOLE SAE A, G 1/2 INCH, HPS	£134.39
FFPMF125CB	HYDRAULIC MOTOR FFPM125CB, 123,5 CCM/REV, SHAFT 32MM, 4-HOLE SAE, G 1/2 INCH	£131.78
FFPMF160CB	HYDRAULIC MOTOR FFPMF160CB, 158,6 CCM/REV, SHAFT 32MM, 4-HOLE SAE A, G 1/2 INCH, HPS	£136.07
FFPMF200CB	HYDRAULIC MOTOR FFPMF200CB, 197,9 CCM/REV, SHAFT 32MM, 4-HOLE SAE A, G 1/2 INCH, HPS	£140.13
FFPMF250CB	HYDRAULIC MOTOR FFPMF250CB, 247,5 CCM/REV, SHAFT 32MM, 4-HOLE SAE A, G 1/2 INCH, HPS	£144.41
FFPMF315CB	HYDRAULIC MOTOR FFPMF315CB, 316,8CCM/REV, SHAFT 32MM, 4-HOLE SAE A, G 1/2 INCH, HPS	£147.40
FFPMF400CB	HYDRAULIC MOTOR FFPMF400CB, 396,5CCM/REV, SHAFT 32MM, 4-HOLE SAE A, G 1/2 INCH, HPS	£151.86
FFPMF50CB	HYDRAULIC MOTOR FFPMF50CB, 51,2CCM/REV, SHAFT 32MM, 4-HOLE SAE A, G 1/2 INCH, HPS	£123.42
FFPMF80CB	HYDRAULIC MOTOR FFPMF80CB, 78,8CCM/REV, SHAFT 32MM, 4-HOLE SAE A, G 1/2 INCH, HPS	£126.18
FFPMN100CD	HYDRAULIC MOTOR FFPMN100CD, 98,6 CCM/REV, SHAFT 25MM, 2-HOLE SAE A, G 1/2 INCH, HPS NEEDLE BEARING	£141.86
FFPMN125CD	HYDRAULIC MOTOR FFPMN125CD, 123,5 CCM/REV, SHAFT 25MM, 2-HOLE SAE A, G 1/2 INCH, HPS, NEEDLE BEARING	£144.62
FFPMN160CD	HYDRAULIC MOTOR FFPMN160CD, 158,6 CCM/REV, SHAFT 25MM, 2-HOLE SAE A, G 1/2 INCH, HPS, NEEDLE BEARING	£148.91
FFPMN160COD	HYDRAULIC MOTOR FFPM160CD, 158,6 CCM/REV, SHAFT 25,4MM, 2-HOLE SAE A, G 1/2 INCH, HPS, NEEDLE BEARING	£148.89
FFPMN200CD	HYDRAULIC MOTOR FFPMN200CD, 197,9 CCM/REV, SHAFT 25MM, 2-HOLE SAE A, G 1/2 INCH, HPS, NEEDLE BEARING	£152.97
FFPMN250CD	HYDRAULIC MOTOR FFPMN250CD, 247,5 CCM/REV, SHAFT 25MM, 2-HOLE SAE A, G 1/2 INCH, HPS, NEEDLE BEARING	£157.25
FFPMN315CD	HYDRAULIC MOTOR FFPMN315CD, 316,5 CCM/REV, SHAFT 25MM, 2-HOLE SAE A, G 1/2 INCH, HPS, NEEDLE BEARING	£165.94
FFPMN400CD	HYDRAULIC MOTOR FFPMN400CD, 396,5 CCM/REV, SHAFT 25MM, 2-HOLE SAE A, G 1/2 INCH, HPS NEEDLE BEARING	£164.69
FFPMN50CD	HYDRAULIC MOTOR FFPMN50CD, 51,2 CCM/REV, SHAFT 25MM, 2-HOLE SAE A, G 1/2 INCH, HPS, NEEDLE BEARING	£136.25
FFPMN80CD	HYDRAULIC MOTOR FFPMN80CD, 78,8 CCM/REV, SHAFT 25MM, 2-HOLE SAE A, G 1/2 INCH, HPS, NEEDLE BEARING	£139.01
FFPMP200CD	HYDRAULIC MOTOR FFPMP200CD, 197,9 CCM/REV, SHAFT 25MM, 2-HOLE SAE A, G 1/2 INCH, PROTECTION CAP, HPS	£155.10
FFPMP250CD	HYDRAULIC MOTOR FFPMP250CD, 247,5 CCM/REV, SHAFT 25MM, 2-HOLE SAE A, G 1/2 INCH, PROTECTION CAP, HPS	£159.38
FFPMQ100HD	HYDRAULIC MOTOR FFPMQ100HD, 98,6 CCM/REV, SHAFT 25,4MM CROSS HOLE, 4-HOLE FLANGE, HPS	£135.46
FFPMQ125CD	HYDRAULIC MOTOR FFPMQ125CD, 123,5 CCM/REV, SHAFT 25MM, 4-HOLE SQUARE FLANGE, G 1/2 INCH, HPS	£138.19
FFPMQ125HD	HYDRAULIC MOTOR FFPMQ125HAD, 123,5 CCM/REV, SHAFT 25,4MM CROSS HOLE, 4-HOLE FLANGE, HPS	£138.19
FFPMQ160CD	HYDRAULIC MOTOR FFPMQ160CD, 158,6 CCM/REV, SHAFT 25MM, 4-HOLE SQUARE FLANGE, G 1/2 INCH, HPS	£142.50
FFPMQ50CD	HYDRAULIC MOTOR FFPMQ50CD, 51,2 CCM/REV, SHAFT 25MM, 4-HOLE SQUARE FLANGE, G 1/2 INCH, HPS	£129.84
FFPMQ80CD	HYDRAULIC MOTOR FFPMQ80CD, 78,8 CCM/REV, SHAFT 25MM, 4-HOLE FLANGE, HPS,	£132.61
FFPMQ80COD	HYDRAULIC MOTOR FFPMQ80COD, 78,8 CCM/REV, SHAFT 25,4MM, 4-HOLE FLANGE, HPS,	£132.61
FFPMW160CD	HYDRAULIC MOTOR FFPMW160CD, 158,6 CCM/REV, SHAFT 25MM, WHEELFLANGE, HPS, G 1/2"	£153.60
FFPMW200CD	HYDRAULIC MOTOR FFPMW200CD, 197,9 CCM/REV, SHAFT 25MM, WHEELFLANGE, HPS, G 1/2"	£157.66
FFPMW250CD	HYDRAULIC MOTOR FFPMW250CD, 247,5 CCM/REV, SHAFT 25MM, WHEELFLANGE, HPS, G 1/2"	£161.95
FFPMW315CD	HYDRAULIC MOTOR FFPMW315CD, 316,5 CCM/REV, SHAFT 25MM, WHEELFLANGE, HPS, G 1/2"	£164.94
FFPMW400CD	HYDRAULIC MOTOR FFPMW400CD, 396,5 CCM/REV, SHAFT 25MM, WHEELFLANGE, HPS, G 1/2"	£169.39
FFPMW80CD	HYDRAULIC MOTOR FFPMW80CD, 78,8 CCM/REV, SHAFT 25MM, WHEELFLANGE, HPS, G 1/2"	£143.71

FFPRM Hydraulik Motor

- Modell Längsschieberventil mit Geroller
- Geringes Startmoment und hoher Wirkungsgrad
- Ideal für enge Bauräume
- Internes Rückschlagventil
- Verwendung ohne Leckölanschluss möglich
- Hochdruckwellendichtring ist standard

FFPRM Hydraulic Motor

- *Spool valve type with geroler*
- *Low starting torque and high efficiency*
- *Optimized for small spaces*
- *Internal check valve*
- *Usage without drain line possible*
- *High pressure seal is standard*

TYP / *Type*		FFPRM 50	FFPRM 80	FFPRM 100	FFPRM 125	FFPRM 160	FFPRM(1) 200	FFPRM(2) 200	FFPRM(1) 250	FFPRM(2) 250	FFPRM(1) 315	FFPRM(2) 315	FFPRM(1) 400	FFPRM(2) 400
Schluckvolumen / *Displacement* [cm^3/REV]		51.3	80.6	100.8	124.9	157.2	199.2	199.2	252	252	314.5	314.5	396.5	396.5
Max. Drehzahl / *Max. Speed* [RPM]	Dauerbetrieb / *Cont.*	755	750	600	475	375	300	300	240	240	190	190	150	150
	Int.(3)	970	940	750	600	470	375	375	300	300	240	240	190	190
Max. Drehmoment / *Max. Torque* [daNm]	Dauerbetrieb / *Cont.*	10	19.6	24.2	27.1	38.9	45	38.5	53.8	38.8	53.1	38.5	58.5	35.5
	Int.(3)	12.6	22.1	28.1	33.9	42.8	50	46	60.8	57.9	63	57	68.7	59.8
	Spitze / *Peak* (4)	16.8	27	32.1	36.8	45.8	56	56	70.6	65.5	83	83	86.8	71.3
Max. Leistungsabgabe / *Max. Output Power* [kW]	Dauerbetrieb / *Cont.*	6.9	12.6	12	12.4	11.4	11	9	10.5	6.4	9	6	7.7	4.7
	Int.(3)	8.3	15	15	14.5	12.6	13	11.5	12	10.5	11	9.6	10.6	8.7
Max. Druckgefälle / *Max. Pressure Drop* [bar]	Dauerbetrieb / *Cont.*	140	160	160	160	160	160	135	150	105	135	85	110	65
	Int.(3)	175	180	180	180	180	180	175	175	160	150	130	140	75
	Spitze / *Peak* (4)	210	210	210	210	210	210	210	210	200	175	175	175	175
Max. Ölstrom / *Max. Oil flow* [l/min]	Dauerbetrieb / *Cont*	40	60	60	60	60	60	60	60	60	60	60	60	60
	Int.(3)	50	75	75	75	75	75	75	75	75	75	75	75	75
Max. Eingangsdruck / *Max. Input Pressure* [bar]	Dauerbetrieb / *Cont.*	175	175	175	175	175	175	175	175	175	175	175	175	175
	Int.(3)	200	200	200	200	200	200	200	200	200	200	200	200	200
	Spitze / *Peak* (4)	225	225	225	225	225	225	225	225	225	225	225	225	225
Gewicht / *Weight* [kg]		6.7	6.9	6.9	7.2	7.5	8.1	8.1	8.5	9.5	9.1	9.1	9.5	9.5

(1) FFPRM Motor mit CB, SH, K und SB Wellen
(2) FFPRM Motor mit C, CO und S Wellen
(3) Intermittierender Betrieb max. 6 Sekunden / Minute
(4) Spitzenbetrieb max. 0,6 Sekunden / Minute

(1) FFPRM Motor with CB, SH, K and SB shafts
(2) FFPRM Motor with C, CO and S shafts
(3) Intermittend operation rating applies to 6 sec. of every minute
(4) Peak load rating applies to 0,6 sec of every minute

50% OFF ALL PRICES

Leistungsdaten

FFPRM 50 (51.7 cm³/U)

Druck / *pressure* (bar)

Durchflussmenge / ***Oil flow*** (l/min)

		50	70	90	100	120	140 (Max. cont.)	160	175 (Max. Int.)	
	5	3.5	4.5	6.1	6.7	7.7	8.8			daNm
		93	**84**	**76**	**73**	**69**	**46**			RPM
	10	3.6	4.6	6.2	6.9	8.0	9.5	10.8	12.0	
		186	**178**	**166**	**162**	**153**	**136**	**118**	**97**	
	15	3.5	4.9	6.3	7.3	8.8	10.0	10.9	12.3	
		283	**277**	**269**	**261**	**250**	**230**	**211**	**185**	
	20	3.5	4.7	6.1	6.9	8.3	9.6	10.9	12.6	
		377	**375**	**365**	**361**	**346**	**330**	**302**	**270**	
	30	3.3	4.4	6.0	6.7	8.0	9.5	10.8	12.6	
		576	**569**	**561**	**554**	**542**	**531**	**500**	**465**	
	40	3.0	4.1	5.8	6.6	7.9	9.2	10.6	12.2	
		760	**758**	**753**	**750**	**738**	**724**	**700**	**670**	
	45	2.9	4.0	5.7	6.5	7.8	9.0	10.5	12.1	
		856	**853**	**849**	**845**	**835**	**815**	**796**	**770**	
Max. cont.	50	2.6	3.7	5.3	6.0	7.3	8.5	9.9	11.4	
		950	**940**	**925**	**906**	**880**	**852**	**832**	**801**	
Max. int.	60	2.0	3.3	4.8	5.6	6.9	8.1	9.5	10.9	
		1138	**1124**	**1100**	**1075**	**1056**	**1028**	**1006**	**970**	

Performance data

FFPRM 80 (81.5 cm³/U)

Druck / *pressure* (bar)

Durchflussmenge / ***Oil flow*** (l/min)

		50	70	90	100	120	140	160 (Max. cont.)	175	200 (Max. Int.)	
	5	5.0	6.4	8.8	10.8	13.3					daNm
		59	**56**	**50**	**44**	**38**					RPM
	10	5.4	7.7	9.9	10.8	12.9	15.0	17.3			
		118	**113**	**106**	**97**	**86**	**79**	**56**			
	20	5.7	7.8	10.2	11.1	13.4	15.5	17.7	19.6	22.5	
		238	**234**	**227**	**216**	**203**	**190**	**178**	**154**	**135**	
	30	5.4	7.5	10.0	10.8	13.1	15.2	17.6	19.5	22.3	
		360	**352**	**340**	**332**	**316**	**302**	**290**	**274**	**250**	
	40	4.8	7.3	9.6	10.5	2.7	14.8	17.2	19.0	22.0	
		480	**470**	**458**	**445**	**430**	**418**	**403**	**388**	**359**	
	50	4.2	7.0	9.3	10.2	12.4	14.7	17.0	18.8	21.8	
		604	**595**	**582**	**570**	**556**	**540**	**521**	**504**	**487**	
	60	3.7	6.6	8.9	9.8	12.1	14.4	16.6	18.4	21.3	
		726	**715**	**704**	**692**	**678**	**663**	**647**	**622**	**594**	
Max. cont.	70	3.2	6.0	8.3	9.5	11.6	14.0	16.0	17.7	20.8	
		845	**834**	**820**	**802**	**789**	**767**	**754**	**730**	**705**	
Max. int.	75	2.1	5.0	7.8	9.0	11.1	13.5	15.4	17.1	20.0	
		910	**895**	**881**	**867**	**852**	**830**	**806**	**787**	**756**	

FFPRM 100 (102 cm³/U)

Druck / *pressure* (bar)

Durchflussmenge / ***Oil flow*** (l/min)

		50	70	90	100	120	140	160 (Max. cont.)	175	200 (Max. Int.)	
	5	6.6	9.2	12.0	135.	15.6					daNm
		45	**42**	**38**	**34**	**27**					RPM
	10	6.8	9.6	12.5	13.8	15.9	18.8	21.2			
		93	**90**	**86**	**81**	**74**	**57**	**42**			
	20	6.5	9.4	12.3	13.7	15.5	18.6	21.0	23.8	27.4	
		189	**185**	**180**	**173**	**165**	**158**	**150**	**139**	**118**	
	30	6.3	9.2	12.0	13.3	15.3	18.5	20.9	23.5	27.0	
		286	**281**	**275**	**266**	**257**	**246**	**237**	**225**	**207**	
	40	5.7	8.8	11.7	13.0	15.2	18.5	20.8	23.3	26.7	
		385	**378**	**365**	**355**	**345**	**332**	**320**	**314**	**297**	
	50	48	79	110	123	150	183	204	228	260	
		482	**477**	**470**	**460**	**448**	**435**	**420**	**405**	**389**	
	60	38	70	105	120	144	178	200	220	252	
		580	**572**	**560**	**548**	**535**	**523**	**510**	**500**	**478**	
Max. cont.	70	32	65	100	118	141	176	197	215	246	
		678	**670**	**660**	**648**	**638**	**626**	**615**	**606**	**580**	
Max. int.	75	23	59	93	111	136	170	192	210	240	
		728	**720**	**710**	**695**	**681**	**667**	**650**	**634**	**618**	

Leistungsdaten

Performance data

FFPRM 125 (127.2 cm³/U)

Druck / *pressure* (bar)

Durchflussmenge / *Oil flow* (l/min)	50	70	90	100	120	140	160 (Max. cont.)	175	200 (Max. Int.)	
5	7.6	11.0	14.5	16.7	18.9					daNm
	36	**31**	**25**	**19**	**13**					RPM
10	8.4	11.8	15.5	17.6	20.2	22.8	25.3			
	73	**70**	**60**	**48**	**36**	**25**	**19**			
20	8.2	11.7	15.3	17.4	20.0	23.0	25.9	29.4	33.2	
	153	**151**	**148**	**144**	**138**	**128**	**117**	**104**	**73**	
30	7.9	11.6	15.1	17.1	19.8	22.8	25.7	29.2	32.9	
	231	**228**	**224**	**218**	**210**	**201**	**183**	**168**	**137**	
40	7.2	11.4	14.8	16.8	19.6	22.6	25.6	29.0	32.7	
	309	**307**	**303**	**298**	**292**	**280**	**270**	**252**	**218**	
50	6.2	10.5	14.3	16.5	19.5	22.3	25.4	28.7	32.3	
	389	**386**	**382**	**378**	**370**	**360**	**344**	**328**	**292**	
60	5.2	9.8	13.6	16.0	19.1	22.0	25.0	28.2	31.9	
	467	**463**	**459**	**456**	**448**	**427**	**410**	**399**	**352**	
70 (Max. cont.)	4.1	9.0	13.0	15.6	18.7	21.5	24.2	27.8	31.3	
	545	**542**	**538**	**534**	**529**	**520**	**508**	**486**	**430**	
75 (Max. int.)	3.2	7.9	12.6	14.8	18.0	20.8	23.4	26.2	30.0	
	586	**583**	**578**	**570**	**560**	**546**	**532**	**520**	**480**	

FFPRM 160 (157.2 cm³/U)

Druck / *pressure* (bar)

Durchflussmenge / *Oil flow* (l/min)	50	70	90	100	120	140	160 (Max. cont.)	175	200 (Max. Int.)	
5	10.4	14.6	19.0	21.0	24.5					daNm
	26	**23**	**20**	**16**	**10**					RPM
10	10.7	15.0	19.5	21.6	25.0	29.0	33.5			
	59	**56**	**50**	**45**	**37**	**30**	**22**			
20	10.2	15.1	19.8	22.0	25.7	29.8	34.2	37.0	42.0	
	121	**118**	**115**	**113**	**108**	**102**	**97**	**90**	**78**	
30	9.7	14.6	19.0	21.7	25.6	29.5	34.0	36.8	41.6	
	184	**178**	**173**	**170**	**164**	**155**	**143**	**128**	**103**	
40	9.8	14.0	18.5	21.0	25.2	29.0	33.5	36.3	41.2	
	246	**241**	**235**	**228**	**220**	**210**	**194**	**177**	**150**	
50	7.2	12.8	17.9	20.2	24.4	28.4	32.7	35.8	40.9	
	310	**307**	**300**	**295**	**287**	**278**	**262**	**247**	**210**	
60	6.0	11.6	17.0	19.8	24.0	27.9	32.1	35.2	40.0	
	374	**367**	**359**	**354**	**346**	**338**	**323**	**306**	**265**	
70 (Max. cont.)	4.9	10.7	16.4	19.3	23.3	27.1	30.9	34.4	39.0	
	437	**430**	**421**	**415**	**403**	**393**	**381**	**365**	**318**	
75 (Max. int.)	3.6	9.8	15.2	18.5	22.6	26.5	30.0	33.4	37.9	
	472	**463**	**450**	**441**	**431**	**420**	**405**	**389**	**365**	

FFPRM 200 (194.5 cm³/U)

Druck / *pressure* (bar)

Durchflussmenge / *Oil flow* (l/min)	50	70	90	100	120	140	160 (Max. cont.)	175	200 (Max. Int.)	
5	13.2	18.1	23.8	26.2	31.0					daNm
	24	**22**	**18**	**13**	**10**					RPM
10	13.5	18.6	24.0	26.4	31.5	35.6	40.3			
	49	**47**	**45**	**43**	**38**	**33**	**24**			
20	13.1	18.3	23.8	26.0	31.4	35.8	40.4	43.8	49.8	
	99	**97**	**94**	**92**	**88**	**83**	**74**	**64**	**56**	
30	12.6	17.8	23.3	25.4	31.1	35.5	40.2	43.1	48.6	
	149	**147**	**144**	**141**	**135**	**126**	**113**	**105**	**127**	
40	11.2	16.9	22.8	25.0	30.7	35.2	40.0	42.6	47.7	
	200	**197**	**194**	**191**	**185**	**174**	**160**	**151**	**127**	
50	9.5	15.6	22.1	24.6	30.0	35.0	39.8	42.1	47.0	
	252	**249**	**246**	**243**	**238**	**228**	**212**	**194**	**161**	
60	7.8	14.5	21.3	23.8	28.9	34.2	38.6	41.2	45.9	
	304	**301**	**298**	**294**	**286**	**276**	**262**	**243**	**218**	
70 (Max. cont.)	6.7	13.5	20.6	22.8	27.7	33.6	37.5	40.8	45.3	
	355	**353**	**349**	**340**	**329**	**316**	**300**	**288**	**257**	
75 (Max. int.)	5.8	12.5	19.7	22.0	27.0	32.1	36.0	39.8	44.2	
	382	**379**	**373**	**362**	**350**	**337**	**332**	**312**	**278**	

50% OFF ALL PRICES

Leistungsdaten

Performance data

FFPRM 250 (253.5 cm³/U)

Druck / *pressure* (bar)

Durchflussmenge / ***Oil flow*** (l/min)	50	70	90	100	120	140	160 (Max. cont.)	175	200 (Max. Int.)	
5	17.5	24.3	30.4	34.2	40.7					daNm
	17	**16**	**14**	**12**	**10**					RPM
10	17.6	24.6	31.0	34.4	40.9	46.5	52.5			
	37	**35**	**31**	**28**	**23**	**18**	**11**			
20	17.5	24.4	30.8	34.0	40.8	46.3	52.0	55.8	63.6	
	75	**73**	**72**	**70**	**66**	**58**	**53**	**50**	**42**	
30	16.2	23.5	30.4	33.2	40.0	45.5	51.6	55.0	62.1	
	114	**111**	**108**	**106**	**100**	**92**	**83**	**77**	**65**	
40	14.3	22.3	30.0	32.9	39.6	44.7	51.2	54.6	61.7	
	154	**152**	**150**	**147**	**143**	**132**	**120**	**110**	**90**	
50	12.4	20.8	28.9	32.3	38.4	44.0	50.3	53.5	60.0	
	193	**190**	**187**	**174**	**168**	**160**	**149**	**140**	**116**	
60	10.3	19.2	28.0	31.4	37.1	42.6	48.9	51.4	57.8	
	233	**230**	**227**	**224**	**218**	**205**	**190**	**181**	**155**	
70 (Max. cont.)	8.8	17.8	26.4	30.1	35.6	41.8	47.9	49.8	56.0	
	273	**270**	**267**	**263**	**252**	**242**	**226**	**209**	**173**	
75 (Max. int.)	6.2	16.5	25.6	28.8	34.7	41.2	47.4	48.6	54.2	
	294	**291**	**287**	**283**	**274**	**263**	**249**	**236**	**211**	

FFPRM 315 (317.5 cm³/U)

Druck / *pressure* (bar)

Durchflussmenge / ***Oil flow*** (l/min)	50	70	90	100	120	140 (Max. cont.)	160	175 (Max. Int.)	
5	21.5	30.2							daNm
	13	**11**							RPM
10	21.8	30.5	38.3	42.2	48.8	55.1	62.2		
	28	**27**	**25**	**24**	**21**	**18**	**13**		
20	21.5	30.3	38.0	41.8	48.5	54.9	62.0	66.0	
	60	**59**	**57**	**55**	**52**	**49**	**45**	**42**	
30	20.4	29.6	37.5	41.3	48.0	54.2	61.3	65.4	
	91	**89**	**86**	**84**	**81**	**78**	**72**	**67**	
40	19.6	28.7	36.8	41.0	47.7	53.9	60.9	65.0	
	122	**120**	**117**	**112**	**106**	**100**	**94**	**85**	
50	17.6	27.0	35.6	39.3	46.1	52.6	59.7	64.5	
	154	**151**	**147**	**140**	**131**	**120**	**109**	**100**	
60	16.2	24.6	33.9	37.4	44.6	51.1	58.6	62.8	
	185	**182**	**177**	**172**	**163**	**152**	**140**	**134**	
70 (Max. cont.)	14.3	23.5	32.4	35.8	43.0	49.3	56.2	61.4	
	217	**213**	**208**	**201**	**190**	**178**	**166**	**158**	
75 (Max. int.)	12.5	21.2	30.3	33.9	41.7	48.1	54.3	58.2	
	232	**228**	**222**	**216**	**208**	**200**	**183**	**171**	

FFPRM 400 (381.4 cm³/U)

Druck / *pressure* (bar)

Durchflussmenge / ***Oil flow*** (l/min)	30	45	55	65	80	100 (Max. cont.)	125	140 (Max. Int.)	
5	15.3	23.2							daNm
	12	**10**							RPM
10	15.7	23.6	28.4	33.7	40.6	49.7	61.2	66.8	
	24	**23**	**22**	**21**	**19**	**17**	**15**	**12**	
20	15.0	23.2	28.0	33.2	40.1	49.0	60.6	66.0	
	49	**48**	**47**	**46**	**44**	**41**	**38**	**32**	
30	14.2	21.5	27.4	32.7	39.8	48.3	60.3	65.2	
	76	**75**	**74**	**73**	**71**	**67**	**63**	**50**	
40	12.6	21.2	26.8	32.0	39.3	47.7	59.3	63.5	
	103	**101**	**99**	**97**	**95**	**92**	**8870**		
50	10.5	18.7	24.2	30.2	37.6	45.5	58.3	60.8	
	128	**126**	**124**	**121**	**118**	**115**	**111**	**96**	
60	9.0	16.7	22.9	28.1	36.2	44.4	56.6	60.0	
	154	**152**	**150**	**148**	**145**	**138**	**130**	**121**	
70 (Max. cont.)	9.0	14.9	20.0	25.8	34.1	42.5	54.6	58.0	
	180	**179**	**178**	**176**	**173**	**168**	**160**	**148**	
75 (Max. int.)	5.6	12.5	18.2	24.1	32.0	40.8	52.4	56.5	
	195	**194**	**193**	**191**	**189**	**185**	**178**	**170**	

Abmessungen

Dimensions

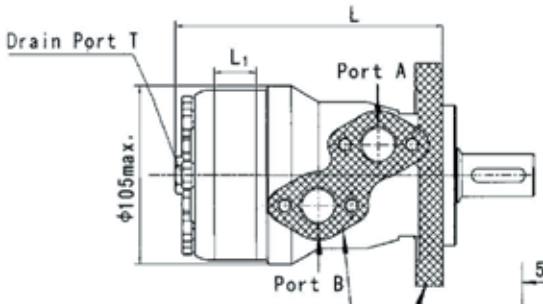

Anschlüsse / *Porting*

Seitenanschluss / ***Side Ports***

Version G M U P

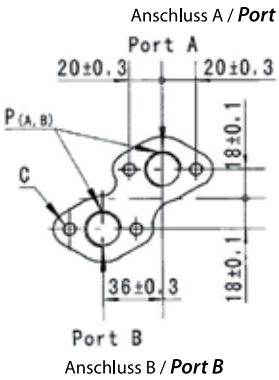

E Endanschluss auf Anfrage / ***Rear ports on request***

An-schluss / *Port*	Versionen / *Versions*			
	Leer / *Omit*	M	U	P
P(A,B)	2 x G ½"	2 x M22 x 1,5	7/8-14 O-Ring	½-14 NPTF
T	G ¼"	M14 x 1,5	7/16-20 UNF	7/16-20 UNF
C	4 x M8	4 x M8	5/16-18 UNC	5/16-18 UNC

Anbaumaße / *Mounting*

Ovalflansch / ***Oval Mount*** SAE A (2-Loch) / ***2 holes***

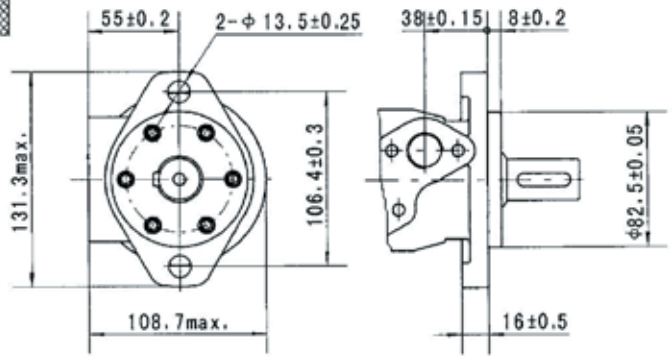

F Magneto Flansch / ***Magneto Mount*** (4-Loch / ***4 holes***)

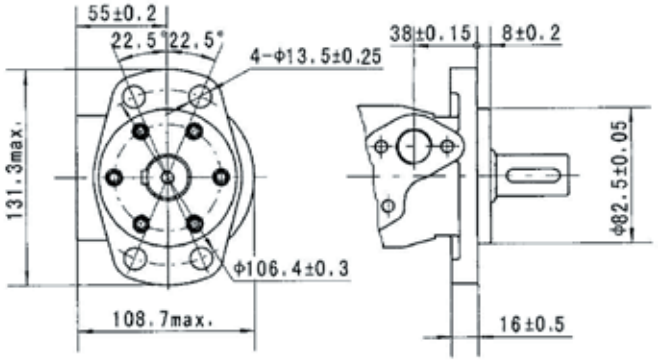

Q Quadratflansch / ***Square flange*** (4 Schrauben / ***4 bolts***)

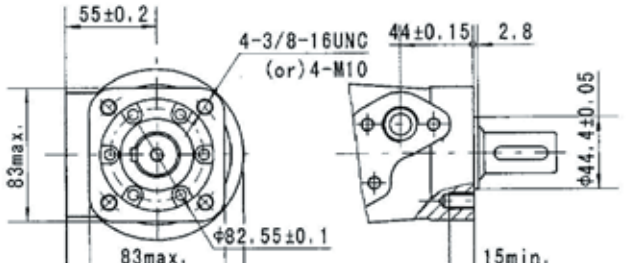

Typ / *Type*	L	L_1	Typ / *Type*	L	L_1
FFPRM(F) 50	140	10	FFPRMQ 50	146	10
FFPRM(F) 80	146	16	FFPRMQ 80	152	16
FFPRM(F) 100	150	20	FFPRMQ 100	156	20
FFPRM(F) 125	155	25	FFPRMQ 125	161	25
FFPRM(F) 160	161.5	30.5	FFPRMQ 160	167.5	30.5
FFPRM(F) 200	170	38.1	FFPRMQ 200	176	38.1
FFPRM(F) 250	180	50	FFPRMQ 250	186	50
FFPRM(F) 315	192	62	FFPRMQ 315	198	62
FFPRM(F) 400	204	74	FFPRMQ 400	188	74

50% OFF ALL PRICES

Abtriebswellen

C - Ø 25 mm zylindrisch mit Passfeder A8 x 7 x 32. Max. Drehmoment: 34 daNm / ***Ø 25 mm straight, parallel key A8 x 7 x 32. Max. torque: 34 daNm***

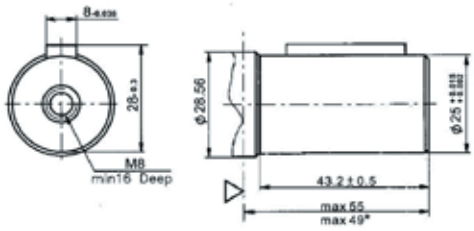

CO - Ø 25.4 mm (1") zylindrisch mit Passfeder ¼" x ¼" x 1¼". Max. Drehmoment: 34 daNm / ***Ø 25.4mm (1") straight, parallel key ¼" x ¼" x 1¼". Max. torque: 34 daNm***

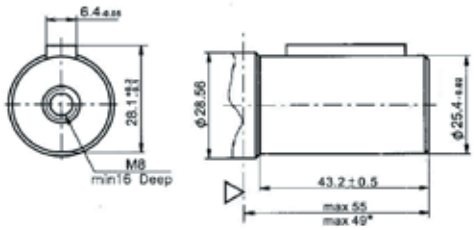

C1 - Ø 1¼" zylindrisch mit Passfeder 5/16" x 5/16" x 1¼". Max. Drehmoment: 77 daNm / ***Ø 1¼" straight, parallel key 5/16" x 5/16" x 1¼". Max. torque: 77 daNm***

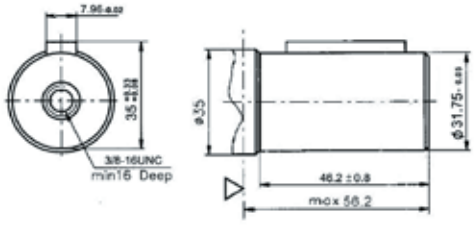

S - Ø 31.75 mm (1 ¼") verzahnt, 14 Zähne, DP 12/24. Max. Drehmoment: 77 daNm / ***Ø 31.75 mm(1¼") splined, 14T, DP 12/24. Max. torque: 77 daNm***

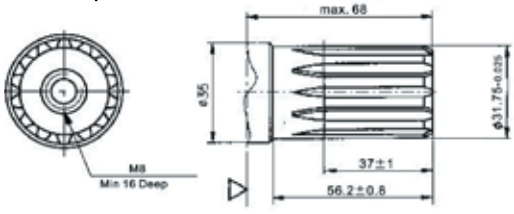

HA - cyl. Ø25.4 mm mit Querloch 8 mm / ***cyl. 25.4 mm with cross hole 8 mm***

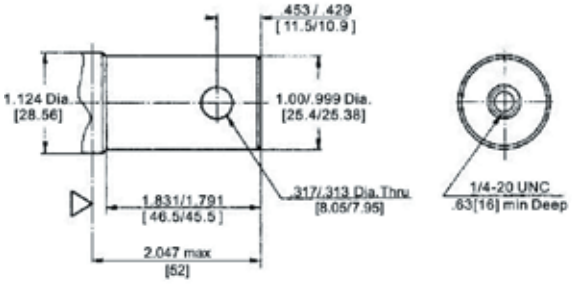

Output shafts

CB - Ø 32 mm zylindrisch mit Passfeder A10 x 8 x 45. Max. Drehmoment: 77 daNm / ***Ø 32 mm straight, parallel key A10 x 8 x 45. Max. torque: 77 daNm***

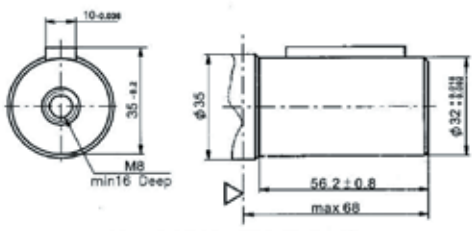

SH - verzahnt (SAE 6B). Max. Drehmoment: 40 daNm / ***splined, (SAE 6B), Max. torque: 77 daNm***

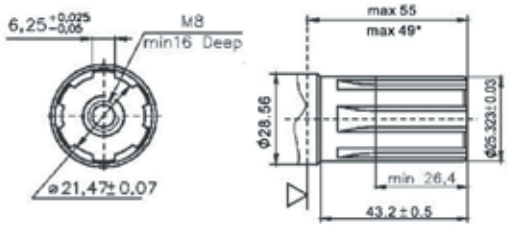

KA - kon. 1:8, SAE J 501, mit Passfeder 5/16" x 5/16" x 1¼". Max. Drehmoment: 77 daNm / ***conical 1:8, SAE J 501, parallel key 5/16" x 5/16" x 1¼". Max. torque: 77 daNm***

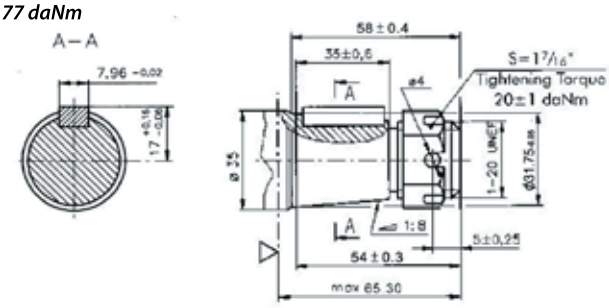

SB - verzahnt 14 Zähne, DP 12/24. Max. Drehmoment: 77 daNm / ***splined, 14 T, DP 12/24. Max. torque: 77 daNm***

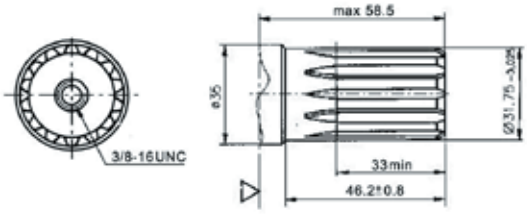

K - kon. 1:10 mit Passfeder B5 x 5 x 14. Max. Drehmoment: 40 daNm / ***conical 1:10, parallel key B5 x 5 x 14. Max. torque: 40 daNm***

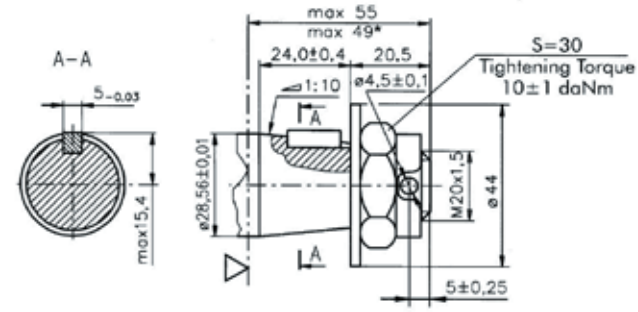

Abtriebswellen

C - Ø 25 mm zylindrisch mit Passfeder A8 x 7 x 32. Max. Drehmoment: 34 daNm / ***Ø 25 mm straight, parallel key A8 x 7 x 32. Max. torque: 34 daNm***

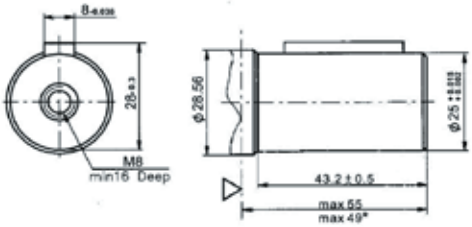

CO - Ø 25.4 mm (1") zylindrisch mit Passfeder ¼" x ¼" x 1¼". Max. Drehmoment: 34 daNm / ***Ø 25.4mm (1") straight, parallel key ¼" x ¼" x 1¼". Max. torque: 34 daNm***

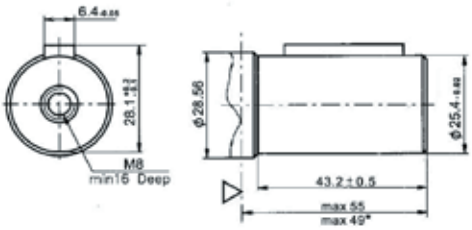

C1 - Ø 1¼" zylindrisch mit Passfeder $^5/_{16}$" x $^5/_{16}$" x 1¼". Max. Drehmoment: 77 daNm / ***Ø 1¼" straight, parallel key $^5/_{16}$" x $^5/_{16}$" x 1¼". Max. torque: 77 daNm***

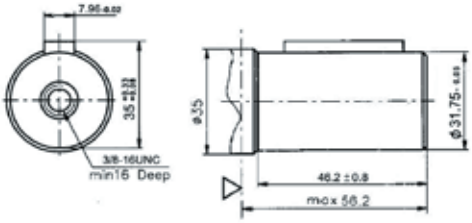

S - Ø 31.75 mm (1 ¼") verzahnt, 14 Zähne, DP 12/24. Max. Drehmoment: 77 daNm / ***Ø 31.75 mm(1¼") splined, 14T, DP 12/24. Max. torque: 77 daNm***

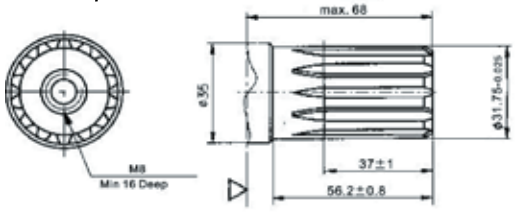

HA - cyl. Ø25.4 mm mit Querloch 8 mm / ***cyl. 25.4 mm with cross hole 8 mm***

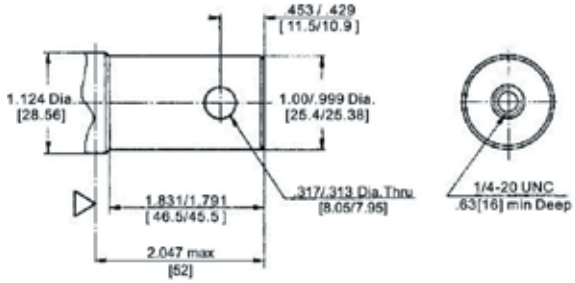

Output shafts

CB - Ø 32 mm zylindrisch mit Passfeder A10 x 8 x 45. Max. Drehmoment: 77 daNm / ***Ø 32 mm straight, parallel key A10 x 8 x 45. Max. torque: 77 daNm***

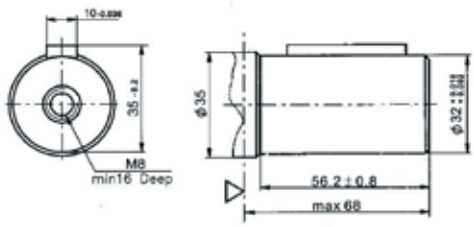

SH - verzahnt (SAE 6B). Max. Drehmoment: 40 daNm / ***splined, (SAE 6B), Max. torque: 77 daNm***

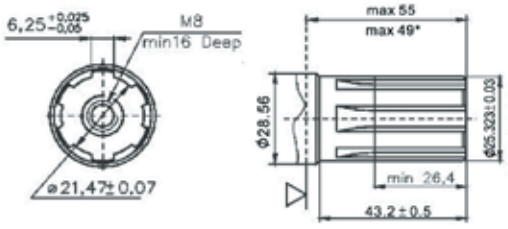

KA - kon. 1:8, SAE J 501, mit Passfeder $^5/_{16}$" x $^5/_{16}$" x 1¼". Max. Drehmoment: 77 daNm / ***conical 1:8, SAE J 501, parallel key $^5/_{16}$" x $^5/_{16}$" x 1¼". Max. torque: 77 daNm***

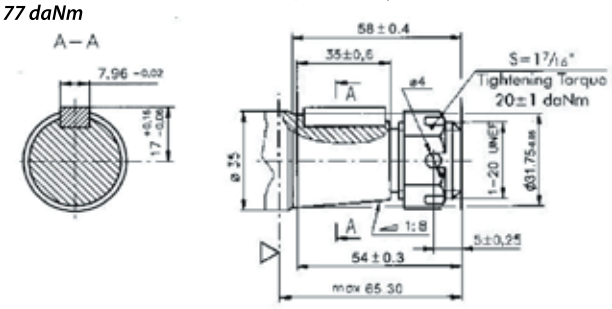

SB - verzahnt 14 Zähne, DP 12/24. Max. Drehmoment: 77 daNm / ***splined, 14 T, DP 12/24. Max. torque: 77 daNm***

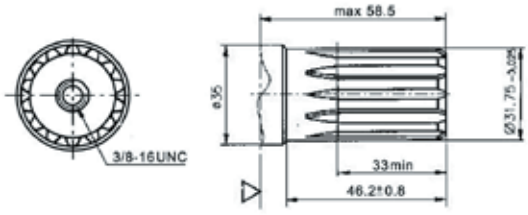

K - kon. 1:10 mit Passfeder B5 x 5 x 14. Max. Drehmoment: 40 daNm / ***conical 1:10, parallel key B5 x 5 x 14. Max. torque: 40 daNm***

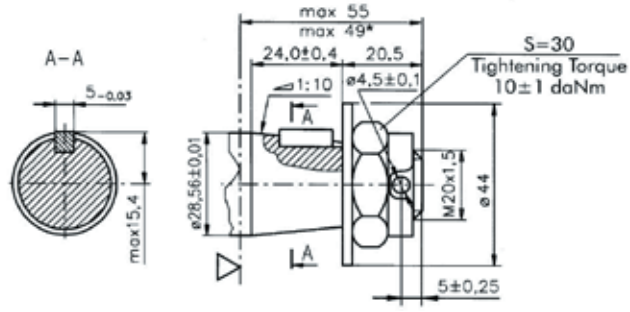

50% OFF ALL PRICES

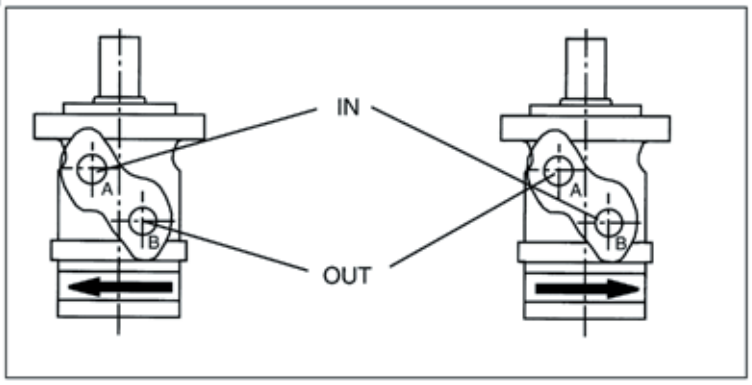

Drehrichtungsauswahl
Rotation selection

Standardeinstellung:
Drehrichtung rechts, wenn Anschluss A druckbeaufschlagt ist.
Drehrichtung links, wenn Anschluss B druckbeaufschlagt ist.

Standard direction of rotation:
Clockwise when port „A" is pressurized.
Counter-Clockwise when port „B" is pressurized.

Max. Rücklaufdruck ohne Leckölleitung bzw. max. Druck in der Leckölleitung / ***Max. return pressure without drain line or max. pressure in drain line***

Drehzahl/ *RPM*	Dauerdruck / *cont. Pressure* (bar)
0-100	75
100-300	50
300-1000	25

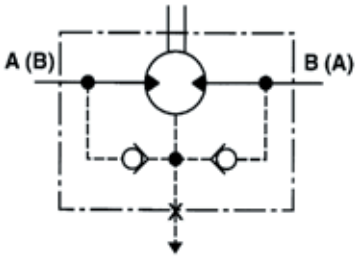

Leckölanschluss / *Drain Line*

Max. Rücklaufdruck mit Leckölleitung / ***Max. return pressure with drain line***

Dauerbetrieb / *Continuous*	160 bar
Kurzzeitig / *Intermittent*	175 bar
Spitze / *Peak*	210 bar

Wellenbelastung
Shaft Load

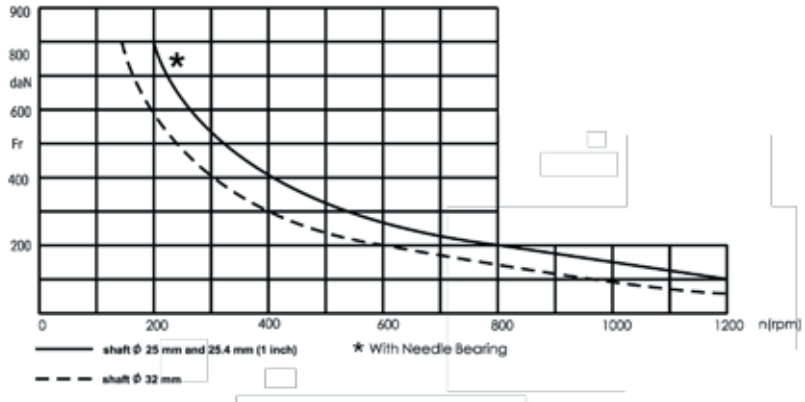

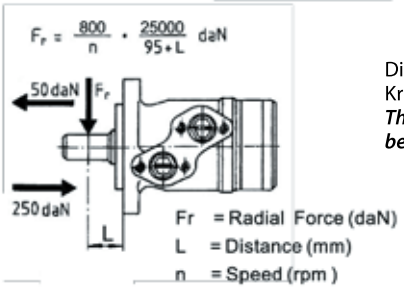

Die zulässige Radiallast berechnet sich aus dem Abstand L zwischen Kraftangriffspunkt und der Montagefläche des Flansches /
The permissible radial shaft load is calculated from the distance L between the point load application and the mounting surface:

Bestellinformationen

	1	2	3	4	5	6	7	8	9
FFPRM									

Pos. 1	Montageflansch / *Mounting flange*
Leer / *Omit*	Ovalflansch 2-loch, SAE A / *Oval mount 2-holes SAE A*
F	Magnetoflansch 4-loch / *Magneto mount 4 holes*
Q	Quadratflansch, 4-loch / *Square flange 4 holes*
W	Radflansch (auf Anfrage) / *Wheel mount (on request)*

Pos. 2	Lageroptionen / *Bearing options*
Leer / *Omit*	Standard / *None*
N	Nadellager / *Needle bearing*

Pos. 3	Anschlüsse / Port type
Leer / Omit	Seitl. Anschlüsse / *Side ports*
E	Endanschlüsse (auf Anfrage) / *Rear ports (on requests)*

Pos.4	Schluckvolumen / *Displacement*
50	50 cm^3/U / *50 ccm/REV*
80	80 cm^3/U / *80 ccm/REV*
100	100 cm^3/U / *100 ccm/REV*
125	125 cm^3/U / *125 ccm/REV*
160	160 cm^3/U / *160 ccm/REV*
200	200 cm^3/U / *200 ccm/REV*
250	250 cm^3/U / *250 ccm/REV*
315	315 cm^3/U / *315 ccm/REV*
400	400 cm^3/U / *400 ccm/REV*

Pos. 5	Wellenausführungen / *Shaft extensions*
C	Ø25 mm zylindrisch mit Passfeder A8 x 7 x 28 *Ø25 mm straight with parallel key A8 x 7 x 28*
CO	Ø1" (25.4mm) zylindrisch mit Passfeder ¼" x ¼" x ¼" *Ø1" (25.4mm) straight with parallel key ¼" x ¼" x ¼"*
HA	cyl. Ø25.4 mm mit Querloch 8 mm / *cyl. 25,4 mm with cross hole 8 mm*

Order Information

S	Ø 31.75 mm (1 ¼") verzahnt, 14 Zähne, DP 12/24 / *Ø 31,75 mm (1¼") splined, 14T, DP 12/24.*
SH	Ø25,32 mm verzahnt (SAE 6B) / *Ø25,32 mm splined (SAE 6B)*
KA	Konisch 1:8 SAE, J501 mit Passfeder 5/16" x 5/16" x 1 ¼" *Conical 1:8 SAE, J501 with key 5/16" x 5/16" x 1 ¼"*
C1	Ø1 1/4" zylindrisch mit Passfeder 5/16" x 5/16" x 1 ¼" *Ø1 1/4" straight with key 5/16" x 5/16" x 1 ¼"*
CB	Ø32 mm zylindrisch mit Passfeder A10 x 8 x 45 *Ø32 mm straight with key A10 x 8 x 45*
SB	verzahnt 14 Zähne, DP 12/24 / *splined, 14 T, DP 12/24*
K	Konisch 1:10 mit Passfeder B5 x 5 x 14 *Conical 1:10 with key B5 x 5 x 14*

Pos. 6	Wellendichtung / *Shaft seal*
D	Hochdruckwellendichtung bis 150 bar (standard) *High Pressure Seal up to 150 bar (standard)l*
U	Hochdruckwellendichtung 200 bar *High Pressure Seal 200 bar*

Pos. 7	Anschlüsse / *Porting*
Leer / *Omit*	G ½" / G ½"
M	Metrisch / *Metric*
U	7/8-14 UNF, O-Ring / 7/8-*UNF, O-ring*
P	½-14 NPTF / ½-*14 NPTF*

Pos. 8	Farbe / *Painting*
Leer / *Omit*	Grau / *Grey*
RAL...	+ Ralfarbe (z.B. 7021) / + *Ral colour (e.g. 7021)l*

Pos. 9	Drehrichtung / *Rotation direction*
Leer / *Omit*	Standarddrehrichtung / *Standard Rotation*
R	Umgekehrte Drehrichtung / *Reverse Rotation*

50% OFF ALL PRICES

HYDRAULIC MOTOR PRICELIST - BUILD YOUR OWN

FFPRM HYDRAULIC MOTOR

STANDARD: OPTIONS INCLUDED FFPRM	PART NUMBER	PRICE
SIDE PORTS: 2 X G 1/2" (BSP	FFPRM 50	£147.65
SHAFT T YPE"C" Ø 25MM	FFPRM 80	£153.23
SHAFT T YPE"CO" Ø 25,4MM	FFPRM 100	£155.90
SHAFT T YPE "H", "HA" ODER / OR "HB"	FFPRM 125	£158.96
TYPE WITH CROSS HOLE Ø 25,4MM	FFPRM 160	£163.48
SHAFT T YPE "SH" SPLINED SAE 6B	FFPRM 200	£169.59
	FFPRM 250	£175.45
FLANGE SAE "A" 2 BOLTS	FFPRM 315	£178.40
	FFPRM 400	£186.42
OPTIONAL EXTRAS FFPRM: SHAFT OPTION EXTRAS FFPRM		
SHAFT Ø 32 MM	CB : ADD	£3.20
SPLINED SHAFT 1 1/4" 14T	SB : ADD	£5.33
1:10 / TAPERED KEY SHAFT 1:10 (B5 X 5 X 14)	T : ADD	£4.27
TAPERED KEY SHAFT 1:8 (SAE J 501)	TA : ADD	£4.27
SHAFT SEAL FOR DRAIN 150 BAR	D ; ADD	£8.54
NEEDLE BEARING	N : ADD	£10.68
FLANGE OPTION EXTRAS FFPRM		
4 HOLE FLANGE SAE A	F : ADD	£3.20
SQUARE FLANGE	Q: ADD	£4.27
PROTECTION CAP	P: ADD	£12.80
REAR PORTS	E: ADD	£5.33
SEAL KIT FFPRM D	SEAL KIT FFPRM	£20.29
NEGATIVE DISK BRAKE FOR FF/FFPRM MOTORS	FFLB / 288 -7	£253.30
	14, 21, 32, 43, 63	

HYDRAULIC MOTOR PRICELIST - COMPLETE

PART NUMBER	DESCRIPTION	PRICE
FFPRM100CB	HYDRAULIC MOTOR FFPRM100CB, 100,8 CCM/REV, SHAFT 32MM, 2-HOLE SAE A, HPS, G 1/2 INCH	£159.12
FFPRM100CD	HYDRAULIC MOTOR FFPRM100CD, 100,8 CCM/REV, SHAFT 25MM, 2-HOLE SAE A, HPS, G 1/2 INCH	£164.61
FFPRM100COD	HYDRAULIC MOTOR FFPRM100COD, 99,0 CCM/REV, SHAFT 25,4MM, 2-HOLE SAE A, HPS	£164.61
FFPRM100SHD	HYDRAULIC MOTOR FFPRM100SHD, 100,8 CCM/REV, SPLINED SHAFT SAE6B, 2-HOLE SAE A, HPS, G 1/2 INCH	£164.61
FFPRM125CB	HYDRAULIC MOTOR FFPRM125CB, 125,1 CCM/REV, SHAFT 32MM, 2-HOLE SAE A, HPS, G 1/2 INCH	£162.16
FFPRM125CD	HYDRAULIC MOTOR FFPRM125CD, 125,1 CCM/REV, SHAFT 25MM, 2-HOLE SAE A, HPS, G 1/2 INCH	£167.51
FFPRM125COD	HYDRAULIC MOTOR FFPRM125COD, 125,1 CCM/REV, SHAFT 25,4MM, 2-HOLE SAE A, HPS, G 1/2 INCH	£167.51
FFPRM125SHD	HYDRAULIC MOTOR FFPRM125SHD, 125,1 CCM/REV, SPLINED SHAFT SAE6B, 2-HOLE SAE A, HPS, G 1/2 INCH	£167.51
FFPRM160CB	HYDRAULIC MOTOR FFPRM160CB, 159,4 CCM/REV, SHAFT 32MM, 2-HOLE SAE A, HPS, G 1/2 INCH	£166.69
FFPRM160CD	HYDRAULIC MOTOR FFPRM160CD, 159,4 CCM/REV, SHAFT 25MM, 2-HOLE SAE A, HPS, G 1/2 INCH	£172.03
FFPRM160COD	HYDRAULIC MOTOR FFPRM160COD, 159,4 CCM/REV, SHAFT 25,4MM, 2-HOLE SAE A, HPS, G 1/2 INCH	£172.03
FFPRM160SHD	HYDRAULIC MOTOR FFPRM160SHD, 159,4 CCM/REV, SPLINED SHAFT SAE 6B, 2-HOLE SAE A, HPS, G 1/2 INCH	£172.03
FFPRM200C/C	HYDRAULIC MOTOR FFPRM200C/C, 199,6 CCM/REV, DOUBLE SHAFTS 25MM, 2-HOLE SAE A, G 1/2 INCH	£244.21
FFPRM200CB	HYDRAULIC MOTOR FFPRM200CB, 199,6 CCM/REV, SHAFT 32MM, 2-HOLE SAE A, HPS, G 1/2 INCH	£172.80
FFPRM200CD	HYDRAULIC MOTOR FFPRM200CD, 199,6 CCM/REV, SHAFT 25MM, 2-HOLE SAE A, HPS	£178.14
FFPRM200COD	HYDRAULIC MOTOR FFPRM200COD, 199,6 CCM/REV, SHAFT 25,4MM, 2-HOLE SAE A, HPS	£178.14
FFPRM200SHD	HYDRAULIC MOTOR FFPRM200SHD, 197,9 CCM/REV, SPLINED SHAFT SAE 6B, 2-HOLE SAE A, HPS, G 1/2 INCH	£178.14
FFPRM250CB	HYDRAULIC MOTOR FFPRM250CB, 249,8 CCM/REV, SHAFT 32MM, 2-HOLE SAE A, G 1/2 INCH	£175.45
FFPRM250CD	HYDRAULIC MOTOR FFPRM250CD, 249,8 CCM/REV, SHAFT 25MM, 2-HOLE SAE A, HPS, G 1/2 INCH	£183.98
FFPRM250COD	HYDRAULIC MOTOR FFPRM250COD, 251,1 CCM/REV, SHAFT 25,4MM, 2-HOLE SAE A, HPS	£183.98
FFPRM250SHD	HYDRAULIC MOTOR FFPRM250SHD, 249,8 CCM/REV, SPLINED SHAFT SAE 6B, 2-HOLE SAE A, HPS, G 1/2 INCH	£183.98
FFPRM315CB	HYDRAULIC MOTOR FFPRM315CB, 315,7 CCM/REV, SHAFT 32MM, 2-HOLE SAE A, HPS, G 1/2 INCH	£181.59
FFPRM315CD	HYDRAULIC MOTOR FFPRM315CD, 315,7 CCM/REV, SHAFT 25MM, 2-HOLE SAE A, HPS, G 1/2 INCH	£186.93
FFPRM315COD	HYDRAULIC MOTOR FFPRM315COD, 315,7 CCM/REV, SHAFT 25,4MM, 2-HOLE SAE A, HPS, G 1/2 INCH	£186.93
FFPRM315SHD	HYDRAULIC MOTOR FFPRM315SHD, 315,7 CCM/REV, SPLINED SHAFT SAE 6B, 2-HOLE SAE A, HPS, G 1/2 INCH	£186.93
FFPRM400CB	HYDRAULIC MOTOR FFPRM400CB, 396,5 CCM/REV, SHAFT 32MM, 2-HOLE SAE A, HPS, G 1/2 INCH	£189.61
FFPRM400CD	HYDRAULIC MOTOR FFPRM400CD, 396,5 CCM/REV, SHAFT 25MM, 2-HOLE SAE A, HPS, G 1/2 INCH	£194.97
FFPRM400COD	HYDRAULIC MOTOR FFPRM400COD, 396,5 CCM/REV, SHAFT 25,4MM, 2-HOLE SAE A, HPS, G 1/2 INCH	£194.97
FFPRM400SHD	HYDRAULIC MOTOR FFPRM400SHD, 396,5 CCM/REV, SPLINED SHAFT SAE 6B, 2-HOLE SAE A, HPS, G 1/2 INCH	£194.97
FFPRM50CB	HYDRAULIC MOTOR FFPRM50CB, 51,2 CCM/REV, SHAFT 25MM, 2-HOLE SAE A, G 1/2 INCH	£150.83
FFPRM50CD	HYDRAULIC MOTOR FFPRM50CD, 51,2 CCM/REV, SHAFT 25MM, 2-HOLE SAE A, HPS, G 1/2 INCH	£150.83
FFPRM50COD	HYDRAULIC MOTOR FFPRM50COD, 51,2 CCM/REV, SHAFT 25,4MM, 2-HOLE SAE A, HPS, G 1/2 INCH	£150.83
FFPRM50SHD	HYDRAULIC MOTOR FFPRM50SHD, 51,2 CCM/REV, SPLINED SHAFT SAE6B, 2-HOLE SAE A, HPS, G 1/2 INCH	£150.83
FFPRM80CB	HYDRAULIC MOTOR FFPRM80CB, 80,5 CCM/REV, SHAFT 32MM, 2-HOLE SAE A, HPS, G 1/2 INCH	£156.42

FLOWFIT HYDRAULIC MOTOR PRICELIST - COMPLETE

PART NUMBER	DESCRIPTION	PRICE
FFPRM80CD	HYDRAULIC MOTOR FFPRM80CD, 80,5 CCM/REV, SHAFT 25MM, 2-HOLE SAE A, HPS, G 1/2 INCH	£161.77
FFPRM80COD	HYDRAULIC MOTOR FFPRM80COD, 80,5 CCM/REV, SHAFT 25,4MM (1 INCH), 2-HOLE SAE A, G 1/2 INCH	£161.77
FFPRM80SHD	HYDRAULIC MOTOR FFPRM80SHD, 80,5 CCM/REV, SPLINED SHAFT SAE6B, 2-HOLE SAE A, HPS, G 1/2 INCH	£161.77
FFPRMF100CB	HYDRAULIC MOTOR FFPRMF100CB, 100,8 CCM/REV, SHAFT 32MM, 4-HOLE SAE A, HPS, G 1/2 INCH	£162.31
FFPRMF125CB	HYDRAULIC MOTOR FFPRMF125CB, 125,1 CCM/REV, SHAFT 32MM, 4-HOLE SAE A, HPS, G 1/2 INCH	£165.31
FFPRMF160CB	HYDRAULIC MOTOR FFPRMF160CB, 159,4 CCM/REV, SHAFT 32MM, 4-HOLE SAE A, HPS, G 1/2 INCH	£169.88
FFPRMF200CB	HYDRAULIC MOTOR FFPRMF200CB, 199,6 CCM/REV, SHAFT 32MM, 4-HOLE SAE A, HPS, G 1/2 INCH	£175.99
FFPRMF250CB	HYDRAULIC MOTOR FFPRMF250CB, 249,8 CCM/REV, SHAFT 32MM, 4-HOLE SAE A, HPS, G 1/2 INCH	£181.84
FFPRMF250CD	HYDRAULIC MOTOR FFPRMF250CD, 249,8 CCM/REV, SHAFT 25MM, 4-HOLE SAE A, HPS, G 1/2 INCH	£187.19
FFPRMF315CB	HYDRAULIC MOTOR FFPRMF315CB, 315,7 CCM/REV, SHAFT 32MM, 4-HOLE SAE A, HPS, G 1/2 INCH	£184.78
FFPRMF400CB	HYDRAULIC MOTOR FFPRMF400CB, 396,5 CCM/REV, SHAFT 32MM, 4-HOLE SAE A, HPS, G 1/2 INCH	£192.81
FFPRMF80CB	HYDRAULIC MOTOR FFPRMF80CB, 80,5 CCM/REV, SHAFT 32MM, 4-HOLE SAE A, HPS, G 1/2 INCH	£159.61
FFPRMF80CD	HYDRAULIC MOTOR FFPRMF80CD, 80,5 CCM/REV, SHAFT 25MM, 4-HOLE SAE A, HPS, G 1/2 INCH	£161.77
FFPRMN100CB	HYDRAULIC MOTOR FFPRMN100CB, 100,8 CCM/REV, SHAFT 32MM, 2-HOLE SAE A, NEEDLE BEAR., G 1/2 INCH	£169.78
FFPRMN100CD	HYDRAULIC MOTOR FFPRMN100CD, 100,8 CCM/REV, SHAFT 25MM, 2-HOLE SAE A, HPS, NEEDLE BEAR., G 1/2 INCH	£175.13
FFPRMN125CB	HYDRAULIC MOTOR FFPRMN125CB, 125,1 CCM/REV, SHAFT 32MM, 2-HOLE SAE A, NEEDLE BEAR., G 1/2 INCH	£172.83
FFPRMN125CD	HYDRAULIC MOTOR FFPRMN125CD, 125,1 CCM/REV, SHAFT 25MM, 2-HOLE SAE A, HPS, NEEDLE BEAR., G 1/2 INCH	£172.83
FFPRMN160CB	HYDRAULIC MOTOR FFPRMN160CB, 159,4 CCM/REV, SHAFT 32MM, 2-HOLE SAE A, NEEDLE BEAR., G 1/2 INCH	£177.36
FFPRMN160CD	HYDRAULIC MOTOR FFPRMN160CD, 159,4 CCM/REV, SHAFT 25MM, 2-HOLE SAE A, HPS, NEEDLE BEAR., G 1/2 INCH	£177.36
FFPRMN200CB	HYDRAULIC MOTOR FFPRMN200CB, 199,6 CCM/REV, SHAFT 32MM, 2-HOLE SAE A, NEEDLE BEAR., G 1/2 INCH	£183.48
FFPRMN200CD	HYDRAULIC MOTOR FFPRMN200CD, 199,6 CCM/REV, SHAFT 25MM, 2-HOLE SAE A, HPS, NEEDLE BEAR., G 1/2 INCH	£188.82
FFPRMN250CB	HYDRAULIC MOTOR FFPRMN250CB, 249,8 CCM/REV, SHAFT 32MM, 2-HOLE SAE A, NEEDLE BEAR., G 1/2 INCH	£189.32
FFPRMN250CD	HYDRAULIC MOTOR FFPRMN250CD, 249,8 CCM/REV, SHAFT 25MM, 2-HOLE SAE A, HPS, NEEDLE BEAR., G 1/2 INCH	£194.66
FFPRMN315CB	HYDRAULIC MOTOR FFPRMN315CB, 315,7 CCM/REV, SHAFT 32MM, 2-HOLE SAE A, HPS, NEEDLE BEAR., G 1/2 INCH	£192.27
FFPRMN315CD	HYDRAULIC MOTOR FFPRMN315CD, 315,7 CCM/REV, SHAFT 25MM, 2-HOLE SAE A, HPS, NEEDLE BEAR., G 1/2 INCH	£196.49
FFPRMN400CB	HYDRAULIC MOTOR FFPRMN400CB, 396,5 CCM/REV, SHAFT 32MM, 2-HOLE SAE A, NEEDLE BEAR., G 1/2 INCH	£200.30
FFPRMN400CD	HYDRAULIC MOTOR FFPRMN400CD, 396,5 CCM/REV, SHAFT 25MM, 2-HOLE SAE A, HPS, NEEDLE BEAR., G 1/2 INCH	£205.64
FFPRMN50CB	HYDRAULIC MOTOR FFPRMN50CB, 51,2 CCM/REV, SHAFT 32MM, 2-HOLE SAE A, NEEDLE BEAR., G 1/2 INCH	£161.51
FFPRMN50CD	HYDRAULIC MOTOR FFPRMN50CD, 51,2 CCM/REV, SHAFT 25MM, 2-HOLE SAE A, HPS, NEEDLE BEAR., G 1/2 INCH	£166.85
FFPRMN80CB	HYDRAULIC MOTOR FFPRMN80CB, 80,5 CCM/REV, SHAFT 32MM, 2-HOLE SAE A, NEEDLE BEAR., G 1/2 INCH	£172.45
FFPRMN80CD	HYDRAULIC MOTOR FFPRMN80CD, 80,5 CCM/REV, SHAFT 25MM, 2-HOLE SAE A, HPS, NEEDLE BEAR., G 1/2 INCH	£158.31
FFPRMSN50COD	HYDRAULIC MOTOR FFPRMSN50COD, 51,2 CCM/REV, SHAFT 25,4MM, 2-HOLE SAE A, HPS, 7/8 UNF, NB	£167.43

50% OFF ALL PRICES

FFPMH Hydraulik Motor

- Modell Längsschieberventil mit Geroller
- Geringes Startmoment und hoher Wirkungsgrad
- Flanschmonatge
- Internes Rückschlagventil
- Verschiedene Sonderausführungen möglich

FFPMH Hydraulic Motor

- *Spool valve type with geroler*
- *Low starting torque and high efficiency*
- *Flange mount*
- *Internal check valve*
- *Other special features possble*

TYP / *Type*		FFPMH 200	FFPMH 250	FFPMH 315	FFPMH 400	FFPMH 500
Schluckvolumen / *Displacement* [cm^3/REV]		203.2	255.9	316.1	406.4	489.2
Max. Drehzahl / *Max. Speed* [RPM]	Dauerbetrieb / *Cont.*	366	290	236	183	155
	Int.(1)	439	348	282	220	166
Max. Drehmoment / *Max. Torque* [daNm]	Dauerbetrieb / *Cont.*	51	62.1	74	85	83
	Int.(1)	57.9	70.2	82.7	99	104
	Spitze / *Peak* (2)	65.1	79	98	109.2	117
Max. Leistungsabgabe / *Max. Output Power* [kW]	Dauerbetrieb / *Cont.*	11.2	9.2	9.8	7.4	6.5
	Int.(1)	17	15	13	13	11
Max. Druckgefälle / *Max. Pressure Drop* [bar]	Dauerbetrieb / *Cont.*	175	175	175	155	125
	Int.(1)	200	200	200	190	160
	Spitze / *Peak* (2)	225	225	225	210	180
Max. Ölstrom / *Max. Oil flow* [l/min]	Dauerbetrieb / *Cont*	75	75	75	75	75
	Int.(1)	90	90	90	90	90
Max. Eingangsdruck / *Max. Input Pressure* [bar]	Dauerbetrieb / *Cont.*	200	200	200	200	200
	Int.(1)	225	225	225	225	225
	Spitze / *Peak* (2)	250	250	250	250	250
Max. Rücklaufdruck mit Lecköl-leitung / *max. return pressure with drain line* [bar]	Dauerbetrieb / *Cont*	175	175	175	175	175
	Int.(1)	200	200	200	200	200
	Spitze / *Peak* (2)	225	225	225	225	225
Gewicht / *Weight* [kg]		10.5	11	11.5	12.3	13

(1) Intermittierender Betrieb max. 6 Sekunden / Minute
(2) Spitzenbetrieb max. 0,6 Sekunden / Minute

(1) Intermittend operation rating applies to 6 sec. of every minute
(2) Peak load rating applies to 0,6 sec of every minute

Leistungsdaten

FFPMH 200 (203.2 cm³/U)

Druck / *pressure* (bar)

Durchflussmenge / *Oil flow* (l/min)	35	70	105	140	175 (Max. cont.)	200 (Max. Int.)	
5	9.8 **25**	19.4 **25**	28.4 **22**				daNm RPM
10	10.1 **43**	20.4 **41**	30.1 **36**	39.1 **29**	48.2 **14**		
20	9.9 **100**	20.1 **97**	30.4 **93**	40.2 **85**	50.9 **69**	57.6 **56**	
30	9.7 **145**	19.7 **143**	30.0 **139**	40.2 **130**	51.0 **114**	57.9 **101**	
40	9.0 **200**	19.0 **200**	29.2 **200**	39.9 **188**	50.7 **168**	57.8 **153**	
50	8.2 **248**	18.3 **246**	28.4 **244**	39.2 **235**	50.0 **213**	57.1 **199**	
60	7.3 **292**	17.4 **290**	27.4 **287**	38.4 **279**	49.3 **260**	56.3 **244**	
70	6.3 **352**	16.3 **350**	26.4 **349**	37.4 **338**	48.1 **318**	55.4 **301**	
75	5.9 **366**	15.7 **365**	25.9 **363**	36.6 **355**	47.5 **335**	54.7 **319**	
Max. cont. 80	5.3 **381**	15.0 **381**	25.3 **380**	35.8 **371**	46.6 **352**	53.8 **338**	
Max. int. 90	3.9 **443**	14.0 **437**	24.1 **434**	34.8 **426**	45.6 **407**	52.6 **392**	

Performance data

FFPMH 250 (255.9 cm³/U)

Druck / *pressure* (bar)

Durchflussmenge / *Oil flow* (l/min)	35	70	90	120	145	175 (Max. cont.)	200 (Max. Int.)	
5	12.1 **19**	24.6 **19**	31.8 **18**	39.8 **14**				daNm RPM
10	13.0 **34**	25.8 **33**	33.1 **31**	42.5 **29**	51.5 **23**	59.5 **12**		
20	13.0 **78**	25.8 **77**	33.2 **76**	43.2 **73**	52.0 **65**	62.1 **53**	70.2 **42**	
30	12.2 **115**	25.1 **113**	32.7 **111**	42.9 **105**	52.0 **96**	62.1 **84**	70.0 **75**	
40	11.5 **157**	24.0 **157**	32.3 **156**	42.2 **150**	51.3 **139**	61.6 **127**	69.8 **114**	
50	10.5 **196**	23.2 **195**	31.4 **192**	41.1 **185**	50.5 **173**	60.6 **159**	68.7 **147**	
60	9.4 **232**	22.0 **230**	30.2 **226**	40.1 **218**	49.6 **206**	59.6 **192**	67.6 **180**	
70	8.1 **274**	20.9 **274**	28.8 **274**	38.9 **266**	48.4 **252**	58.2 **238**	66.6 **222**	
75	7.2 **290**	20.3 **289**	28.0 **287**	38.1 **279**	47.5 **266**	57.4 **251**	65.9 **236**	
Max. cont. 80	6.6 **303**	19.4 **302**	27.3 **298**	37.1 **290**	46.7 **279**	56.6 **264**	65.1 **249**	
Max. int. 90	4.9 **348**	17.8 **347**	25.6 **345**	35.5 **337**	45.3 **325**	55.2 **309**	63.4 **292**	

50% OFF ALL PRICES

Leistungsdaten

FFPMH 315 (316.1 cm^3/U)

Druck / *pressure* (bar)

Durchflussmenge / ***Oil flow*** (l/min)	35	70	100	135	155	175 (Max. cont.)	200 (Max. Int.)	
5	15.5	32.5						daNm
	16	**13**						RPM
10	16.3	34.2	45.4	55.6				
	27	**24**	**18**	**14**				
20	16.9	34.9	46.9	58.2	66.4	73.3	80.9	
	63	**61**	**55**	**48**	**40**	**32**	**19**	
30	16.5	34.4	47.0	58.0	66.9	74.0	82.4	
	93	**89**	**82**	**77**	67	**59**	**46**	
40	15.4	33.7	46.5	57.7	66.3	73.7	82.7	
	126	**126**	**119**	**111**	**99**	**88**	**73**	
50	14.1	32.5	45.5	56.8	65.6	72.8	82.4	
	159	**155**	**148**	**139**	**126**	**115**	**98**	
60	12.1	31.2	44.0	55.5	64.3	71.5	81.2	
	187	**186**	**179**	**169**	**154**	**143**	**124**	
70	10.3	29.8	42.5	54.1	63.1	70.3	80.0	
	222	**222**	**215**	**205**	**187**	**176**	**157**	
75 (Max. cont.)	9.4	28.7	41.7	52.9	62.3	69.6	79.2	
	236	**233**	**224**	**215**	**196**	**184**	**166**	
80	8.2	27.7	40.6	51.8	61.1	68.8	78.4	
	246	**244**	**236**	**228**	**210**	**197**	**174**	
90 (Max. int.)	6.2	25.6	38.6	49.6	59.3	66.9	76.7	
	282	**280**	**275**	**266**	**248**	**234**	**209**	

Performance data

FFPMH 400 (406.4 cm^3/U)

Druck / *pressure* (bar)

Durchflussmenge / ***Oil flow*** (l/min)	35	60	105	125	155 (Max. cont.)	190 (Max. Int.)	
5	19.6	34.8	51.6				daNm
	13	**13**	**10**				RPM
10	20.5	36.3	54.6	70.2	85.9		
	22	**21**	**21**	**17**	**11**		
20	20.9	36.6	54.3	70.8	87.4	98.8	
	50	**49**	**46**	**41**	**36**	**31**	
30	20.1	35.7	54.2	70.6	86.4	98.4	
	73	**72**	**70**	**63**	**56**	**51**	
40	19.5	34.6	53.2	70.1	85.8	97.3	
	99	**98**	**96**	**86**	**77**	**71**	
50	17.3	33.2	51.8	68.7	84.8	95.8	
	123	**122**	**118**	**107**	**97**	**90**	
60	15.4	31.9	50.1	66.8	83.3	94.4	
	146	**144**	**141**	**128**	**115**	**106**	
70	13.8	30.5	48.0	64.9	81.4	92.5	
	174	**173**	**169**	**156**	**141**	**130**	
75 (Max. cont.)	12.8	29.4	46.6	63.7	80.2	91.1	
	183	**181**	**177**	**163**	**149**	**138**	
80	11.3	27.7	45.1	62.1	78.6	89.9	
	192	**191**	**188**	**174**	**158**	**144**	
90 (Max. int.)	9.0	25.6	43.3	59.5	76.7	88.1	
	220	**220**	**215**	**202**	**183**	**165**	

FFPMH 500 (500 cm³/U)

Druck / *pressure* (bar)

Durchflussmenge / ***Oil flow*** (l/min)		25	50	85	100	125 (Max. cont.)	160 (Max. Int.)	
	5	16.5	31.7	51.6				daNm
		11	**11**	**8**				RPM
	10	17.8	33.5	55.5	66.9	79.1	96.9	
		20	**19**	**17**	**15**	**13**	**9**	
	20	17.7	33.1	55.9	67.3	79.9	98.8	
		42	**42**	**41**	**38**	**36**	**29**	
	30	17.2	32.0	55.3	66.3	79.2	98.3	
		64	**63**	**61**	**57**	**53**	**47**	
	40	16.3	30.9	54.1	65.4	78.3	97.1	
		85	**85**	**83**	**79**	**75**	**67**	
	50	14.6	29.6	52.3	63.5	76.8	95.4	
		103	**103**	**103**	**97**	**93**	**85**	
	60	12.1	27.5	50.2	61.4	74.7	93.4	
		124	**124**	**123**	**117**	**113**	**103**	
	70	9.7	25.6	48.2	59.7	72.9	91.7	
		148	**148**	**148**	**140**	**134**	**122**	
Max. cont.	75	7.9	24.0	46.9	58.2	71.4	90.2	
		155	**155**	**155**	**152**	**144**	**130**	
	80	6.0	22.6	45.3	57.0	70.1	88.4	
		166	**166**	**166**	**159**	**153**	**139**	
Max. int.	90	3.4	20.1	42.1	55.0	67.3	86.9	
		166	**165**	**164**	**157**	**156**	**155**	

Wellenbelastung
Shaft Load

Die Grafik zeigt den zulässigen Radiallastverlauf bei L=30mm.
The drawing shows the permissible shaft load when L=30mm.

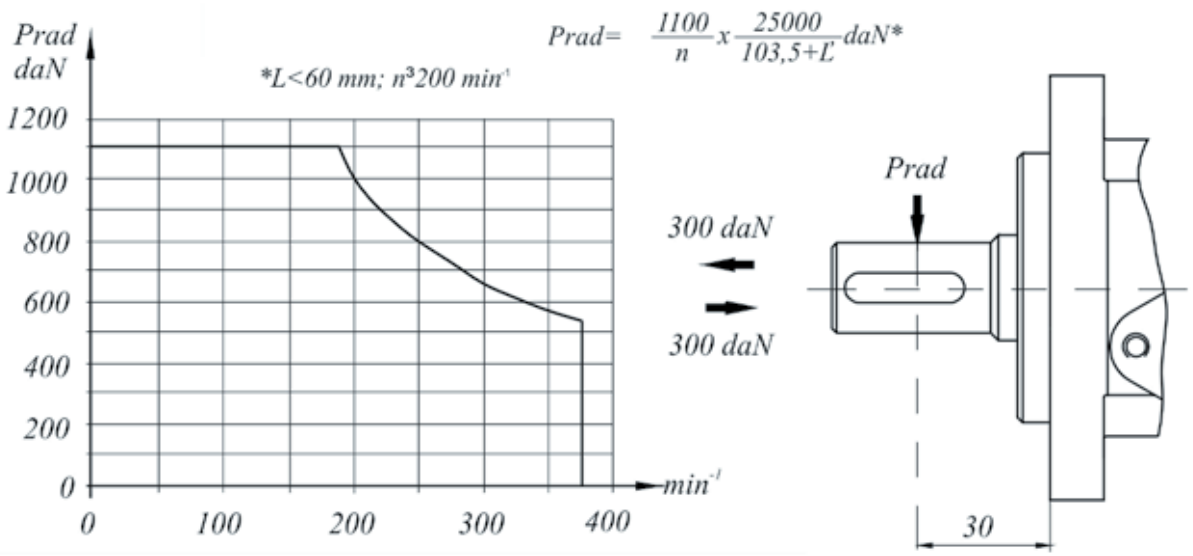

Die zulässige Radiallast berechnet sich aus dem Abstand L zwischen Kraftangriffspunkt und der Montagefläche des Flansches /
The permissible radial shaft load is calculated from the distance L between the point load application and the mounting surface:

50% OFF ALL PRICES

Abmessungen

Dimensions

Anschlüsse / *Porting*

Version G M U P

Anbaumaße / *Mounting*

Magneto Flansch / ***Magneto Mount*** (4-Loch / ***4 holes***)

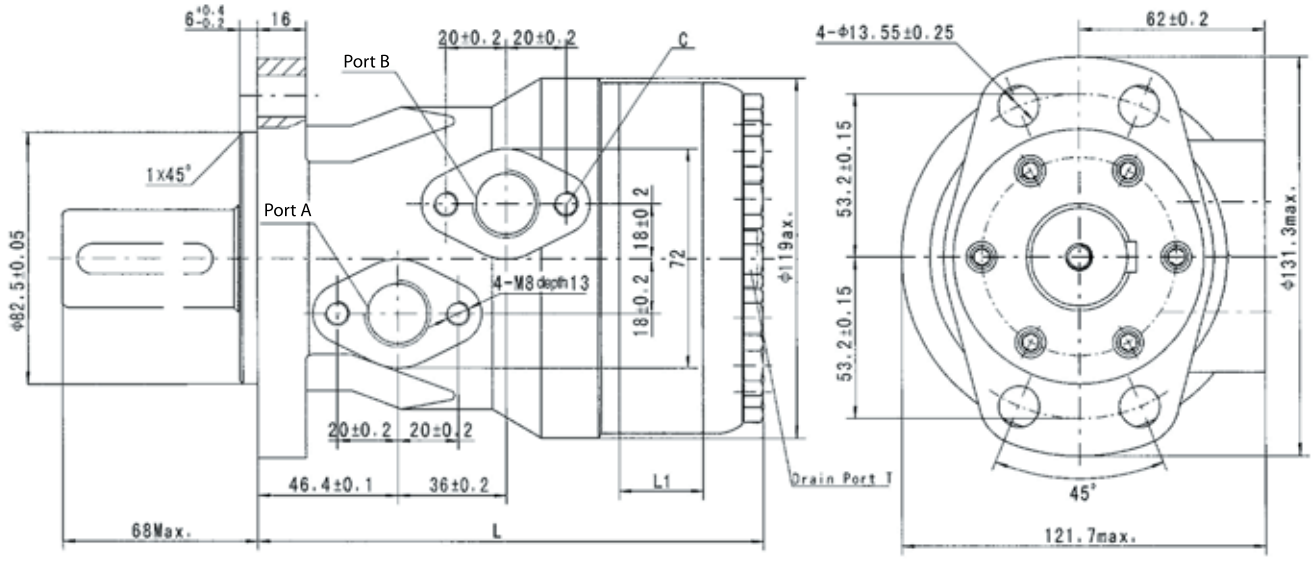

A-Ovalflansch / ***Oval Mount*** SAE A (2-Loch) / ***2 holes***

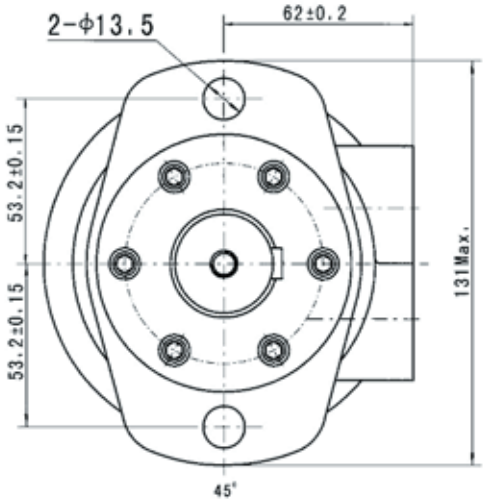

An-schluss / *Port*	Versionen / *Versions*			
	Leer / *Omit*	M	U	P
P(A,B)	G ½"	M22 x 1,5	7/8-14 O-Ring	½-14 NPTF
T	G ¼"	M14 x 1,5	7/16-20 UNF	7/16-20 UNF
C	4 x M8	4 x M8	5/16-18 UNC	5/16-18 UNC

Typ / *Type*	L	L_1
FFPMH 200	168	27
FFPMH 250	175	34
FFPMH 315	184	42
FFPMH 400	195	54
FFPMH 500	206	65

Abtriebswellen

C - Ø 32 mm zylindrisch mit Passfeder A10 x 8 x 45. Max. Drehmoment: 77 daNm / ***Ø 32mm straight, parallel key A10 x 8 x 45. Max. torque: 77daNm***

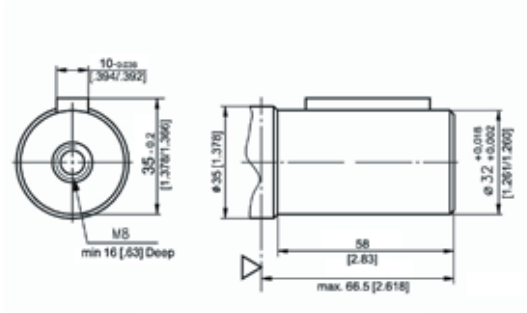

CO - Ø 31,75 mm (1 ¼") zylindrisch mit Passfeder 5/16" x 5/16" x 1¼". Max. Drehmoment: 77 daNm / ***Ø 31,75 mm (1 ¼") straight, parallel key 5/16" x 5/16" x 1 ¼". Max. torque: 77 daNm***

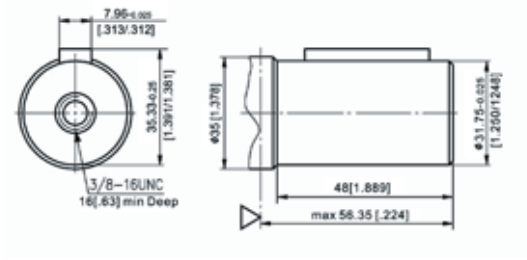

CB - Ø 35mm zylindrisch mit Passfeder A10 x 8 x 45. Max. Drehmoment: 95 daNm / ***Ø 35mm straight, parallel key A10 x 8 x 45. Max. torque: 95 daNm***

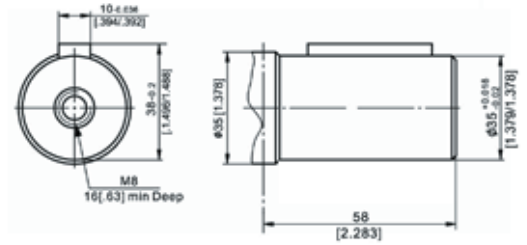

S - Ø 31,75 (1 ¼") verzahnt, 14 Zähne, DP 12/24. Max. Drehmoment: 95 daNm / ***Ø 31,75 (1¼") splined, 14T, DP 12/24. Max. torque: 95 daNm***

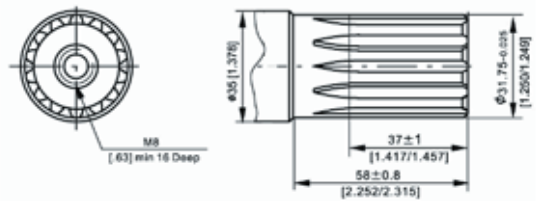

Output shafts

K - kon. 1:10 mit Passfeder B6 x 6 x 20. Max. Drehmoment: 95 daNm / ***conical 1:10, parallel key B6 x 6 x 20. Max. torque: 95 daNm***

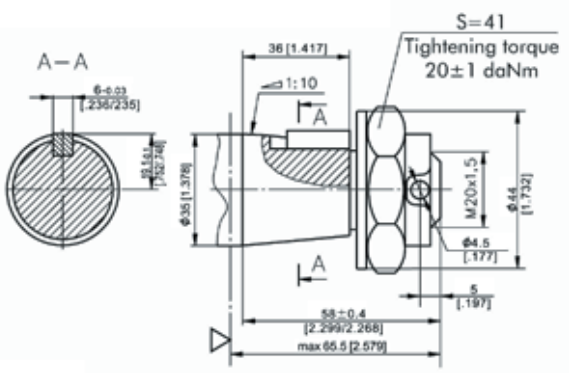

SH - verzahnt (SAE 6B). Max. Drehmoment: 40 daNm / ***splined, (SAE 6B). Max. torque: 77 daNm***

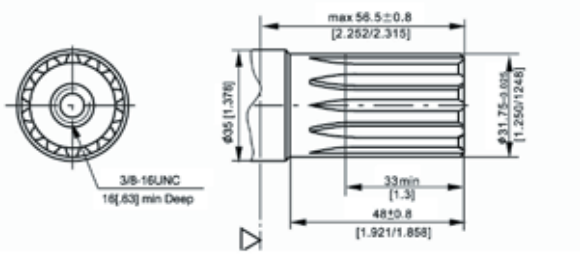

KA - kon. 1:8, SAE J 501, mit Passfeder 5/16" x 5/16" x 1¼". Max. Drehmoment: 77 daNm / ***conical 1:8, SAE J 501, parallel key 5/16" x 5/16" x 1¼". Max. torque: 77 daNm***

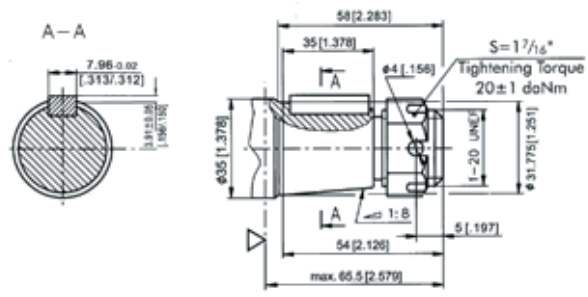

50% OFF ALL PRICES

Max. Rücklaufdruck ohne Leckölleitung bzw. max. Druck in der Leckölleitung / ***Max. return pressure without drain line or max. pressure in drain line***

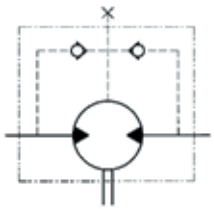

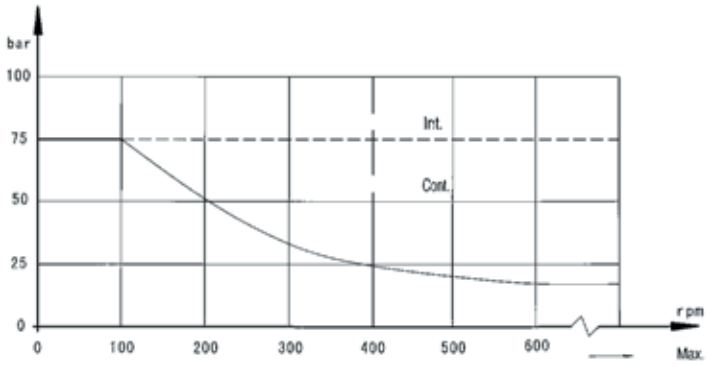

Drehrichtungsauswahl
Rotation selection

Standardeinstellung:
Drehrichtung rechts, wenn Anschluss A druckbeaufschlagt ist.
Drehrichtung links, wenn Anschluss B druckbeaufschlagt ist.

Standard direction of rotation:
Clockwise when post „A" is pressurized.
Counter-Clockwise when port „B" is pressurized.

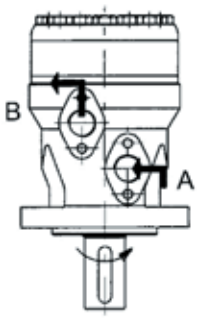

Bestellinformationen

	1	2	3	4	5	6
FFPMH						

Pos. 1	Montageflansch / *Mounting flange*
Leer / *Omit*	Magnetoflansch (4-loch) / *Magneto flange (4-hole)*
A	Ovalflansch 2-loch / *Oval mount 2 holes*

Pos. 2	Schluckvolumen / *Displacement*
200	200 cm^3/U / *200 ccm/REV*
250	250 cm^3/U / *250 ccm/REV*
315	315 cm^3/U / *315 ccm/REV*
400	400 cm^3/U / *400 ccm/REV*
500	500 cm^3/U / *500 ccm/REV*

Pos. 3	Wellenausführungen / *Shaft extensions*
C	Ø 32 mm zylindrisch mit Passfeder A10 x 8 x 45 *Ø 32 mm straight, parallel key A10 x 8 x 45.*
CO	Ø 31,75 mm (1 ¼") zylindrisch mit Passfeder $^5/_{16}$" x $^5/_{16}$" x 1¼" *Ø 31,75 mm (1 ¼") straight, parallel key 5/16" x 5/16" x 1 ¼".*
CB	Ø 35 mm zylindrisch mit Passfeder A10 x 8 x 45 *Ø 35 mm straight, parallel key A10 x 8 x 45.*
S	Ø 31,75 mm (1 ¼") verzahnt, 14 Zähne, DP 12/24, *Ø 31,75 mm(1¼") splined, 14T, DP 12/24.*
K	kon. 1:10 mit Passfeder B6 x 6 x 20. *conical 1:10, parallel key B6 x 6 x 20.*
SH	verzahnt (SAE 6B) / *splined, (SAE 6B)*
KA	kon. 1:8, SAE J 501, mit Passfeder $^5/_{16}$" x $^5/_{16}$" x 1¼" *conical 1:8, SAE J 501, parallel key $^5/_{16}$" x $^5/_{16}$" x 1¼".*

Order Information

Pos. 4	Anschlüsse / *Porting*
Leer / *Omit*	2 x G ½", 1 x G ¼" / *2 x G½", 1 x G ¼"*
M	2 x M18 x 1,5, 1 x M10 x 1 / *2 x M18 x 1,5, 1 x M10 x 1*
U	2 x $^7/_8$-14 UNF, O-Ring, 1 x $^7/_{16}$-20 UNF *2 x $^7/_8$-14 UNF, O-Ring, 1 x $^7/_{16}$-20 UNF*

Pos. 5	Farbe / *Painting*
Leer / *Omit*	Grau / *Grey*
RAL...	+ Ralfarbe (z.B. 7021) / *+ Ral colour (e.g. 7021)l*

Pos. 6	Drehrichtung / *Rotation direction*
Leer / *Omit*	Standarddrehrichtung / *Standard Rotation*
R	Umgekehrte Drehrichtung / *Reverse Rotation*

FLOWFIT HYDRAULIC MOTORPRICE LIST - BUILD YOUR OWN

FFPMH HYDRAULIC MOTOR

STANDARD: OPTIONS INCLUDED FFPMH	PART NUMBER	PRICE
SIDE PORTS: 2 X G 1/2" (BSP)	FFPMH 125	£223.37
SHAFT T YPE "C" Ø 32MM	FFPMH 160	£223.37
SHAFT T YPE "CO" Ø 31,75MM	FFPMH 200	£226.01
SHAFT T YPE "CB" Ø35MM	FFPMH 250	£231.20
SHAFT T YPE "S" SAE 6B	FFPMH 315	£238.60
	FFPMH 400	£247.93
FLANGE MAGNETO MOUNT	FFPMH 500	£262.88
OPTIONAL EXTRAS FFPMH		
SHAFT 14T, DP 12/24	SH;ADD	£5.27
TAPERED KEY SHAFT 1:10 (B6 X 6 X 20)	T (K): ADD	£5.33
TAPERED KEY SHAFT 1:8 (SAE J 501)	TA (KA): ADD	£4.27
	£0.00	£4.27
SEAL KIT FFPMH	SEAL KIT FFPMH	£30.34

FLOWFIT HYDRAULIC MOTORPRICE LIST - COMPLETE

PART NUMBER	DESCRIPTION	PRICE
FFPMH125C	HYDRAULIC MOTOR FFPMH125C, 124,9 CCM/REV, SHAFT 32MM, G 1/2 INCH, MAGNETO MOUNTING FLANGE	£223.36
FFPMH125CB	HYDRAULIC MOTOR FFPMH125CB, 124,9 CCM/REV, SHAFT 35MM, G 1/2 INCH, MAGNETO MOUNTING FLANGE	£223.36
FFPMH160C	HYDRAULIC MOTOR FFPMH160C, 157,2 CCM/REV, SHAFT 32MM, G 1/2 INCH, MAGNETO MOUNTING FLANGE	£223.36
FFPMH160CB	HYDRAULIC MOTOR FFPMH160CB, 157,2 CCM/REV, SHAFT 35MM, G 1/2 INCH, MAGNETO MOUNTING FLANGE	£223.36
FFPMH200C	HYDRAULIC MOTOR FFPMH200C, 203,2 CCM/REV, SHAFT 32MM, G 1/2 INCH, MAGNETO MOUNTING FLANGE	£226.03
FFPMH200CB	HYDRAULIC MOTOR FFPMH200CB, 203,2 CCM/REV, SHAFT 35MM, G 1/2 INCH, MAGNETO MOUNTING FLANGE	£226.03
FFPMH250C	HYDRAULIC MOTOR FFPMH250C, 255,9 CCM/REV, SHAFT 32MM, G 1/2 INCH, MAGNETO MOUNTING FLANGE	£231.19
FFPMH250CB	HYDRAULIC MOTOR FFPMH250CB, 255,9 CCM/REV, SHAFT 35MM, G 1/2 INCH, MAGNETO MOUNTING FLANGE	£231.19
FFPMH315C	HYDRAULIC MOTOR FFPMH315C, 316,1 CCM/REV, SHAFT 32MM, G 1/2 INCH, MAGNETO MOUNTING FLANGE	£238.61
FFPMH315CB	HYDRAULIC MOTOR FFPMH315CB, 316,1 CCM/REV, SHAFT 35MM, G 1/2 INCH, MAGNETO MOUNTING FLANGE	£238.61
FFPMH315K	HYDRAULIC MOTOR FFPMH315K, 316,1 CCM/REV, CONIC SHAFT 1:10, G 1/2 INCH, MAGNETO MOUNTING FLANGE	£242.87
FFPMH400C	HYDRAULIC MOTOR FFPMH400C, 406,4 CCM/REV, SHAFT 32MM, G 1/2 INCH, MAGNETO MOUNTING FLANGE	£247.93
FFPMH400CB	HYDRAULIC MOTOR FFPMH400CB, 406,4 CCM/REV, SHAFT 35MM, G 1/2 INCH, MAGNETO MOUNTING FLANGE	£247.93
FFPMH500C	HYDRAULIC MOTOR FFPMH500C, 489,2 CCM/REV, SHAFT 32MM, G 1/2 INCH, MAGNETO MOUNTING FLANGE	£262.87
FFPMH500CB	HYDRAULIC MOTOR FFPMH500CB, 489,2 CCM/REV, SHAFT 35MM, G 1/2 INCH, MAGNETO MOUNTING FLANGE	£0.00
FFPMH630C	HYDRAULIC MOTOR FFPMH630C, 612,4 CCM/REV, SHAFT 32MM, G 1/2 INCH, MAGNETO MOUNTING FLANGE	£0.00
FFPMH630CB	HYDRAULIC MOTOR FFPMH630CB, 612,4 CCM/REV, SHAFT 35MM, G 1/2 INCH, MAGNETO MOUNTING FLANGE	£0.00

50% OFF ALL PRICES

FFPMS Hydraulik Motor

- Modell Verteilerventil mit Geroller
- Geringes Startmoment und hoher Wirkungsgrad
- Ideal für enge Bauräume
- Internes Rückschlagventil
- Verwendung ohne Leckölanschluss möglich
- Schrägrollenlager für hohe Radialbelastung

FFPMS Hydraulic Motor

- *Disk valve type with geroler*
- *Low starting torque and high efficiency*
- *Optimized for small spaces*
- *Internal check valve*
- *Usage without drain line possible*
- *Tapered roller bearing for high radial load*

TYP / *Type*		FFPMS 80	FFPMS 100	FFPMS 125	FFPMS 160	FFPMS 200	FFPMS 250	FFPMS 315	FFPMS 400
Schluckvolumen / *Displacement* [cm^3/REV]		80.6	100.8	125	154	194	243	311	397
Max. Drehzahl / *Max. Speed* [RPM]	Dauerbetrieb / *Cont.*	800	748	600	470	375	300	240	187
	Int.(1)	988	900	720	560	450	360	280	230
Max. Drehmoment / *Max. Torque* [daNm]	Dauerbetrieb / *Cont.*	19	24	31	31.6	40	45	56	58
	Int.(1)	24	30	37	43	46.6	54	65.8	69
	Spitze / *Peak* (2)	26	32	40	47.2	65	69	74	85
Max. Leistungsabgabe / *Max. Output Power* [kW]	Dauerbetrieb / *Cont.*	15.9	18.8	19.5	15.6	15.7	14.1	14.1	10
	Int.(1)	20.1	23.5	23.2	21.2	18.3	17	18.9	13
Max. Druckgefälle / *Max. Pressure Drop* [bar]	Dauerbetrieb / *Cont.*	175	175	175	150	140	125	120	100
	Int.(1)	210	210	210	210	160	160	140	120
	Spitze / *Peak* (2)	225	225	225	225	225	200	185	140
Max. Ölstrom / *Max. Oil flow* [l/min]	Dauerbetrieb / *Cont*	65	75	75	75	75	75	75	75
	Int.(1)	80	90	90	90	90	90	90	90
Max. Eingangsdruck / *Max. Input Pressure* [bar]	Dauerbetrieb / *Cont.*	250	250	250	250	250	250	250	250
	Int.(3)	300	300	300	300	300	300	300	300
Gewicht / *Weight* [kg]		9.8	10	10.3	10.7	11.1	11.6	12.3	13.2

(1) Intermittierender Betrieb max. 6 Sekunden / Minute
(2) Spitzenbetrieb max. 0,6 Sekunden / Minute

(1) Intermittend operation rating applies to 6 sec. of every minute
(2) Peak load rating applies to 0,6 sec of every minute

Leistungsdaten

FFPMS 80 (80.6 cm³/U)

Druck / *pressure* (bar)

Durchflussmenge / *Oil flow* (l/min)	35	70	105	140	175 (Max. cont.)	210	225 (Max. Int.)	
15	3.5	8.0	12.0	15.8	19.5	23.5	24.9	daNm
	180	**174**	**168**	**164**	**158**	**151**	**143**	RPM
30	3.5	8.0	12.0	15.8	19.5	24.0	26.0	
	362	**352**	**346**	**338**	**330**	**322**	**310**	
40	3.5	7.9	11.9	15.5	19.3	23.4	25.0	
	482	**473**	**464**	**453**	**444**	**434**	**415**	
50	3.0	7.7	11.7	15.3	19.2	23.2	24.8	
	602	**594**	**587**	**569**	**560**	**551**	**522**	
60 (Max. cont.)	2.8	7.7	11.7	15.3	19.2	23.2	24.7	
	724	**713**	**707**	**683**	**673**	**664**	**629**	
65	2.5	7.5	11.4	15.2	19.0	23.0	24.5	
	790	**785**	**770**	**760**	**742**	**720**	**704**	
80 (Max. int.)	2.2	7.0	11.0	14.0	17.0	20.0	22.0	
	980	**965**	**950**	**920**	**891**	**860**	**830**	

Performance data

FFPMS 100 (100.8 cm³/U)

Druck / *pressure* (bar)

Durchflussmenge / *Oil flow* (l/min)	35	70	105	140	175 (Max. cont.)	210	225 (Max. Int.)	
15	4.8	9.5	15.0	20.0	25.0	28.9	31.0	daNm
	146	**144**	**139**	**135**	**130**	**120**	**105**	RPM
30	4.5	9.4	14.6	19.8	25.0	29.5	31.7	
	291	**289**	**278**	**274**	**269**	**258**	**242**	
40	4.3	8.9	14.2	19.6	24.8	29.3	31.6	
	387	**384**	**374**	**359**	**350**	**335**	**320**	
50	4.0	8.8	13.5	19.4	24.7	29.2	31.5	
	486	**483**	**473**	**462**	**450**	**430**	**420**	
60	3.7	8.8	13.2	18.5	24.4	28.9	31.2	
	588	**584**	**574**	**562**	**550**	**538**	**520**	
75 (Max. cont.)	3.5	8.0	13.0	18.0	24.0	28.6	31.0	
	740	**735**	**720**	**705**	**696**	**676**	**653**	
90 (Max. int.)	3.0	7.5	12.4	17.0	23.6	27.7	30.3	
	850	**840**	**810**	**787**	**770**	**750**	**747**	

FFPMS 125 (125 cm³/U)

Druck / *pressure* (bar)

Durchflussmenge / *Oil flow* (l/min)	35	70	105	140	175 (Max. cont.)	210	225 (Max. Int.)	
15	5.5	12.0	17.6	24.5	30.9	34.9	37.5	daNm
	112	**110**	**103**	**96**	**93**	**90**	**84**	RPM
30	5.5	12.0	17.5	25.0	32.4	37.5	40.8	
	222	**220**	**217**	**208**	**200**	**199**	**190**	
40	5.5	12.0	17.5	25.0	32.4	37.0	40.8	
	302	**298**	**292**	**284**	**276**	**268**	**260**	
50	5.0	11.5	17.6	24.8	32.0	37.0	40.6	
	379	**373**	**368**	**363**	**350**	**339**	**328**	
60 (Max. cont.)	4.5	11.3	17.1	24.5	32.4	36.8	40.6	
	456	**448**	**443**	**439**	**425**	**406**	**393**	
65	4.5	11.0	16.7	24.0	31.4	37.0	40.1	
	570	**563**	**555**	**546**	**533**	**515**	**503**	
80 (Max. int.)	4.0	10.5	16.2	23.7	30.9	36.5	39.8	
	685	**676**	**670**	**659**	**644**	**625**	**610**	

FFPMS 160 (157.2 cm³/U)

Druck / *pressure* (bar)

Durchflussmenge / *Oil flow* (l/min)	35	70	105	140	175 (Max. cont.)	210	225 (Max. Int.)	
15	7.0	14.0	20.5	30.5	37.1	43.0	47.3	daNm
	91	**88**	**84**	**78**	**76**	**74**	**58**	RPM
30	7.5	15.0	21.4	32.1	38.0	42.7	49.0	
	185	**182**	**176**	**168**	**164**	**162**	**152**	
40	7.0	15.0	21.5	32.0	37.8	42.5	48.8	
	248	**244**	**239**	**229**	**224**	**217**	**204**	
50	6.5	14.5	21.5	31.6	37.8	42.5	48.2	
	312	**308**	**304**	**294**	**288**	**280**	**270**	
60	6.5	14.5	21.4	31.5	37.5	42.4	48.2	
	375	**371**	**365**	**357**	**346**	**336**	**323**	
75 (Max. cont.)	6.0	13.8	20.8	31.1	37.5	42.0		
	470	**465**	**458**	**447**	**436**	**426**		
90 (Max. int.)	5.6	13.0	20.0	30.8	37.0	41.4		
	564	**559**	**551**	**541**	**526**	**517**		

50% OFF ALL PRICES

Leistungsdaten

FFPMS 200 (200 cm³/U)

Druck / *pressure* (bar)

Durchflussmenge / *Oil flow* (l/min)		35	70	105	140 (Max. cont.)	175	225 (Max. Int.)	
	15	8.9	19.0	29.5	40.0	48.4	60.8	daNm
		73	**71**	**68**	**64**	**60**	**52**	RPM
	30	8.7	19.0	29.4	39.9	48.5	60.0	
		148	**146**	**143**	**140**	**135**	**127**	
	40	8.6	18.8	29.2	39.7	48.3	59.4	
		193	**191**	**189**	**186**	**181**	**172**	
	50	8.0	18.4	29.0	39.5	48.0	59.0	
		247	**245**	**243**	**240**	**235**	**226**	
Max. cont.	60	7.4	17.8	28.6	39.0	47.5	58.2	
		298	**295**	**293**	**290**	**284**	**273**	
	75	5.8	16.0	27.5	37.5	46.0	57.0	
		372	**369**	**365**	**362**	**358**	**346**	
Max. int.	90	4.9	14.8	26.0	35.5	44.5	55.5	
		440	**435**	**430**	**422**	**411**	**401**	

Performance data

FFPMS 250 (252 cm³/U)

Druck / *pressure* (bar)

Durchflussmenge / *Oil flow* (l/min)		35	70	105	140 (Max. cont.)	175	225 (Max. Int.)	
	15	11.7	23.0	35.5	45.0	55.4	65.2	daNm
		58	**55**	**52**	**51**	**47**	**46**	RPM
	30	11.7	22.5	35.0	44.6	56.0	65.7	
		118	**117**	**112**	**109**	**107**	**106**	
	40	11.5	22.5	34.8	44.2	55.2	65.0	
		160	**156**	**152**	**150**	**146**	**142**	
	50	11.0	22.0	34.5	43.8	54.6	64.5	
		202	**200**	**198**	**196**	**195**	**192**	
	60	10.5	22.0	34.0	43.5	54.2	64.2	
		242	**239**	**237**	**234**	**231**	**229**	
Max. cont.	75	9.5	21.5	33.8	43.0	53.7	63.8	
		300	**296**	**293**	**286**	**282**	**278**	
Max. int.	90	9.0	20.5	33.2	42.0	53.0	63.2	
		360	**354**	**348**	**340**	**332**	**326**	

FFPMS 315 (314.5 cm³/U)

Druck / *pressure* (bar)

Durchflussmenge / *Oil flow* (l/min)		35	70	105	140 (Max. cont.)	140	185 (Max. Int.)	
	15	16.0	32.0	46.5	55.5	65.0	74.8	daNm
		48	**47**	**45**	**43**	**40**	**38**	RPM
	30	16.5	32.2	46.8	56.0	65.8	75.2	
		94	**92**	**90**	**89**	**86**	**85**	
	40	16.0	31.0	45.7	54.6	64.2	74.1	
		125	**123**	**120**	**118**	**116**	**115**	
	50	15.5	30.5	45.0	53.8	63.7	73.6	
		158	**156**	**153**	**150**	**147**	**145**	
Max. cont.	60	15.2	30.2	44.2	53.2	63.2	73.2	
		175	**174**	**170**	**164**	**162**	**159**	
	65	14.5	29.5	43.6	52.5	62.8	72.6	
		236	**234**	**230**	**227**	**225**	**222**	
Max. int.	80	13.2	28.0	43.0	52.0	62.2	72.3	
		285	**282**	**280**	**276**	**273**	**270**	

FFPMS 400 (400 cm³/U)

Druck / *pressure* (bar)

Durchflussmenge / *Oil flow* (l/min)		35	70	90	100 (Max. cont.)	120	140 (Max. Int.)	
	15	18.5	36.2	47.4	51.2	58.8	66.0	daNm
		40	**39**	**38**	**37**	**35**	**33**	RPM
	30	18.4	36.4	47.5	51.4	59.0	66.1	
		80	**78**	**77**	**76**	**74**	**72**	
	40	18.0	36.2	47.3	51.3	58.8	65.9	
		106	**104**	**103**	**102**	**100**	**97**	
	50	16.0	36.0	47.2	51.1	58.6	65.8	
		133	**131**	**130**	**129**	**128**	**125**	
	60	15.0	35.9	47.1	51.0	58.5	65.7	
		157	**156**	**155**	**154**	**152**	**150**	
Max. cont.	75	13.0	35.3	46.5	50.4	58.4	65.1	
		200	**198**	**196**	**195**	**194**	**193**	
Max. int.	90	10.5	35.0	46.2	50.0	58.0	64.7	
		238	**235**	**234**	**232**	**230**	**227**	

Abmessungen

Dimensions

Anschlüsse / *Porting*

Seitenanschluss / ***Side Ports***

Version G M U

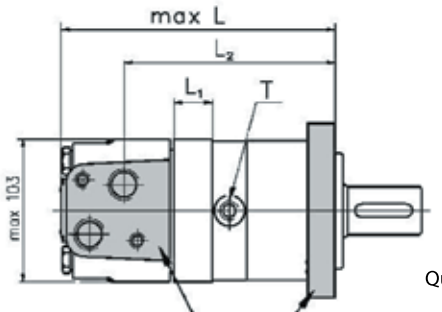

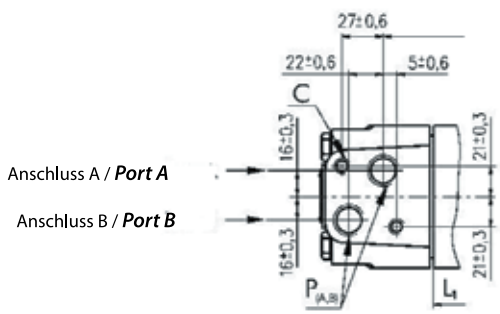

E Endanschluss auf Anfrage / ***Rear ports on request***

An-schluss / *Port*	Versionen / *Versions*		
	Leer / *Omit*	M	U
P(A,B)	G ½"	M22 x 1,5	7/8-14 O-Ring
T	G ¼"	M14 x 1,5	7/16-20 UNF
C	2 x M10	2 x M10	5/16-18 UNC

Quadratflansch SAE A / ***Square flange SAE A***

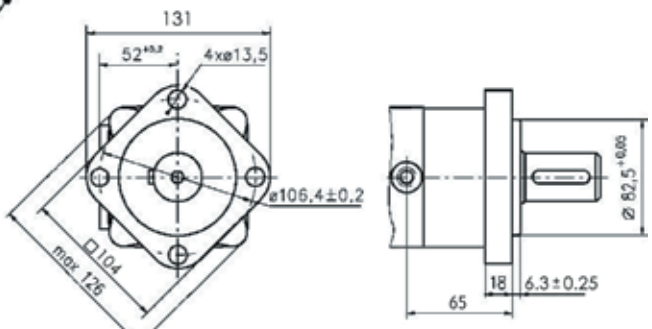

F Magneto Flansch / ***Magneto Mount*** (4-Loch / ***4 holes***)

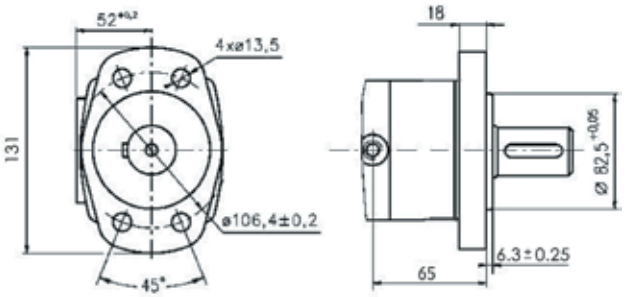

W Radflansch / ***Wheelflange***

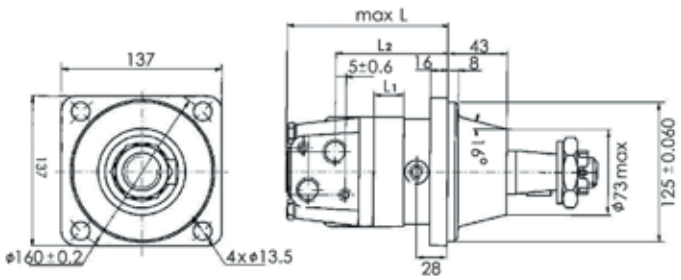

A- Ovalflansch / ***Oval Mount*** SAE A (2-Loch) / ***2 holes***

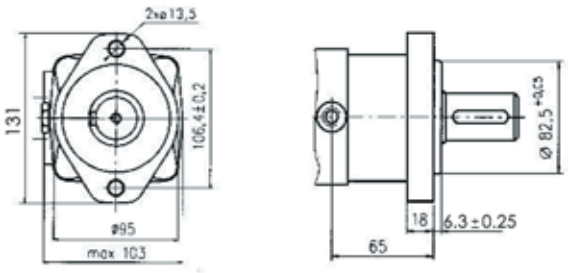

Typ / *Type*	L	L_2	Typ / *Type*	L	L_2	Typ / *Type*	L	L_2	L_1
FFPMS(F) 80	167	123.2	FFPMSW 80	129.4	86	FFPMSQ 80	179	135.2	13
FFPMS(F) 100	171	127.2	FFPMSW 100	133.4	90	FFPMSQ 100	183	139.2	17
FFPMS(F) 125	176	132.2	FFPMSW 125	138.4	95	FFPMSQ 125	188	144.2	22
FFPMS(F) 160	181.5	137.7	FFPMSW 160	143.9	100.5	FFPMSQ 160	193.5	149.7	27.5
FFPMS(F) 200	189	145.2	FFPMSW 200	151.4	108	FFPMSQ 200	201	157.7	35.1
FFPMS(F) 250	201	157.2	FFPMSW 250	163.4	120	FFPMSQ 250	213	169.2	47
FFPMS(F) 315	213	169.2	FFPMSW 315	175.4	132	FFPMSQ 315	225	181.2	59
FFPMS(F) 400	225	181.2	FFPMSW 400	187.4	144	FFPMSQ 400	237	193.2	71

Q Quadratflansch / ***Square flange*** (4 Schrauben / ***4 bolts***)

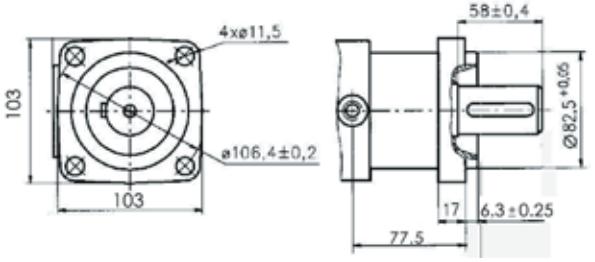

50% OFF ALL PRICES

Abmessungen

Anschlüsse / *Porting*

Seitenanschluss / ***Side Ports***

Version G M U

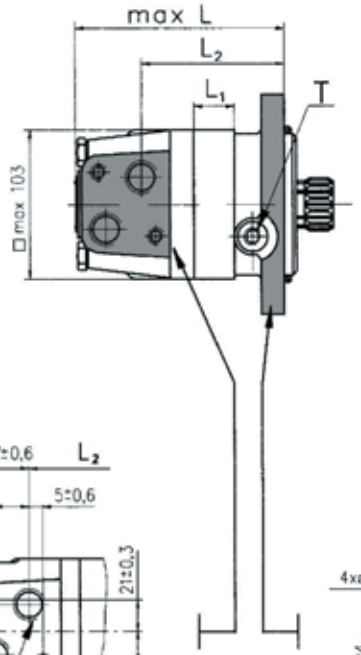

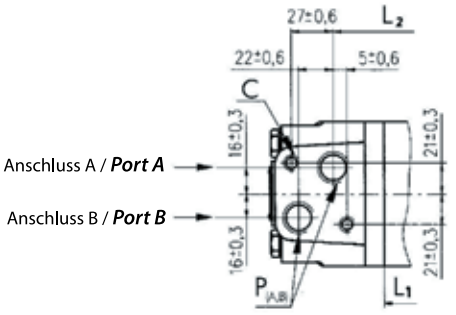

An-schluss / *Port*	Versionen / *Versions*		
	Leer / *Omit*	M	U
P(A,B)	G ½"	M22 x 1,5	7/8-14 O-Ring
T	G ¼"	M14 x 1,5	7/16-20 UNF
C	2 x M10	2 x M10	5/16-18 UNC

Technik / *Technical*

Der Kurzmotor FFPMSS hat keine Abtriebswelle bzw. Lagerung und ist zur direkten Montage an ein Getriebe bzw. an eine Bremse konzipiert worden.
Die Kardanwelle führt eine taumelnde Bewegung durch, daher ist die Montage eines Wellendichtringes nicht möglich. Das Getriebe muss eine entsprechende Abdichtung besitzen. Außerdem muss es so konstruiert werden, dass das Lecköl des Motors die Schmierung der Kardanwelle übernimmt. / ***The short motor FFPMSS has no output shafts or bearings and is designed for a direct mounting into a gearbox or brake.***
The cardan shaft of the motor describes a tumbling motion. For this reason the motor itself can't be fitted with a shaft seal. The gear box must be fitted with a sealing. It is also necessary that the leakage of the motor lubricates the cardan shaft.

Verzahnungsgeometrie / *Fillet Root Side Fit*		mm
Zähnezahl / *Number of Teeth*	z	12
Steigung / *Diametral Pitch*	DP	12/24
Anpresswinkel / *Pressure Angle*	α_D	30°
Nenndurchmesser / *Pitch Dia.*	D	25.4
Hauptdurchmesser / *Major Dia.*	D_{fi}	$28.0^{-0.1}$
Zahngrund / *Minor Dia.*	D_i	$23.0^{+0.033}$
Abstand Zahngrund / *Space Width (Circular)*	L_0	4.308±0.020

Dimensions

Typ / *Type*	L	L_2	L_1
FFPMSS 80	130	86	13
FFPMSS 100	134	90	17
FFPMSS 125	139	95	22
FFPMSS 160	144.5	100.5	27.5
FFPMSS 200	152	108	35.1
FFPMSS 250	164	120	47
FFPMSS 315	176	132	59
FFPMSS 400	188	144	71

S Kurzversion / ***Short Mount***

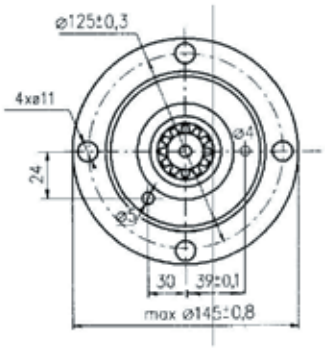

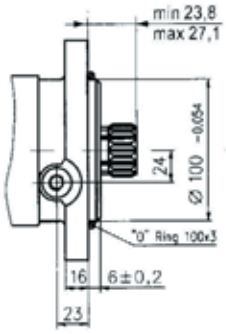

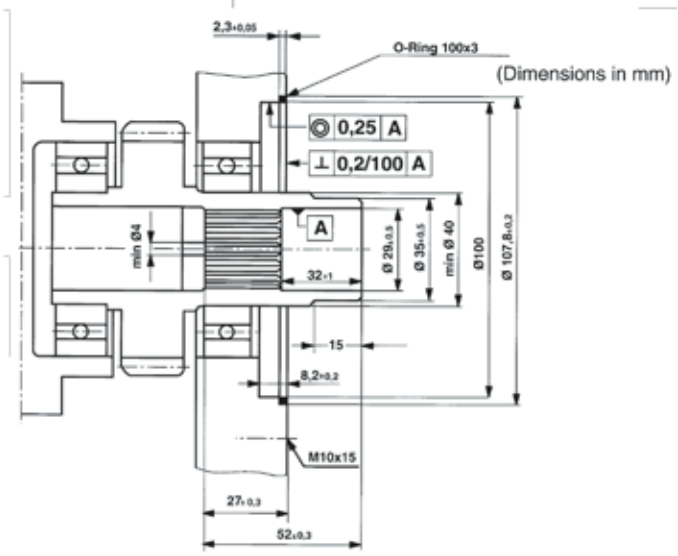

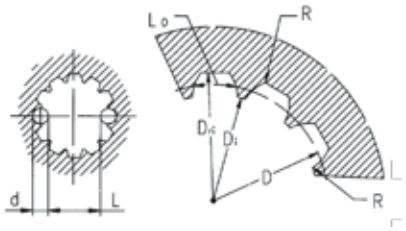

Härtespezifikation / ***Hardening Specification:***
HRC 60±2
Effektive Härtetiefe / ***Effective case depth (HRC 52):***
0,7±0,2mm

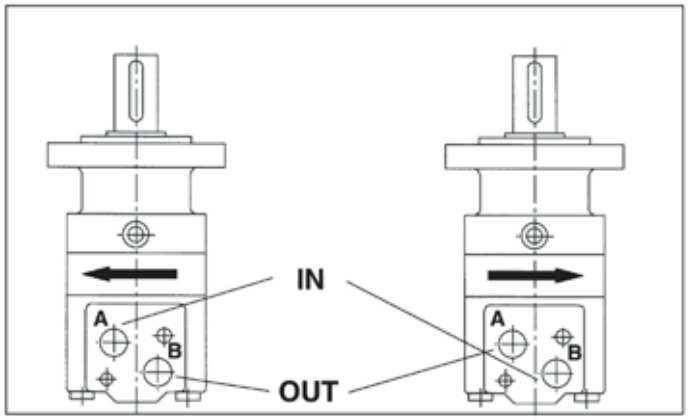

Drehrichtungsauswahl
Rotation selection

Unser Motor FFPMS besitzt integrierte Rückschlagventile, dadurch wird der Druck auf den Wellendichtring nie größer als der Rücklaufdruck. Beim Short-Motor FFPMSS ist der Druck durch die technischen Daten des Anbaugetriebes begrenzt. / ***The FFPMS motor has built-in check valves. For this reason, he pressure on the shaft seal is never greater than back flow pressure. In the short motor FFPMSS pressure is determined based on the technical data of the attached gear box.***

Max. Rücklaufdruck ohne Leckölleitung bzw. max. Druck in der Leckölleitung / ***Max. return pressure without drain line or max. pressure in drain line***

Drehzahl/ *RPM*	Dauerdruck / *cont. Pressure* (bar)
0-100	75
100-300	50
300-1000	20

Max. Rücklaufdruck mit Leckölleitung / ***Max. return pressure with drain line***

Dauerbetrieb / *Continuous*	140 bar
Kurzzeitig / *Intermittent*	175 bar
Spitze / *Peak*	210 bar

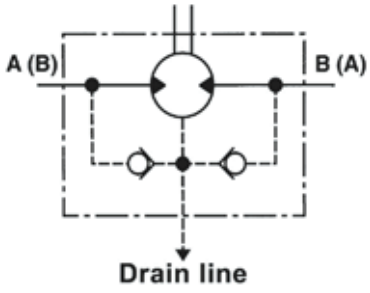

Wellenbelastung
Shaft Load

Durch die integrierten Schrägrollenlager sind die Motoren vom Typ FFPMS in der Lage hohe Axial- und Radialkräfte aufzunehmen. Die gestrichelte Linie im seitlichen Diagramm zeigt die maximal zulässige Radialkraft. Belastungen oberhalb dieser Grenze können zum Bruch der Welle führen. Die durchgezogenen Linien zeigen die zulässigen Radialbelastungen bei einer Lebensdauer von 3000h in Abhängigkeit von der Drehzahl.

The tapered roller bearings on the output shaft can accept high levels of axial and radial load. The broken curve shows the maximum permissible radial load. Loads above and beyond this level can lead to breakage. The solid curve plots the permissable radial loads for a theoretical service life of 3000 hours depending on the shaft rotation speed.

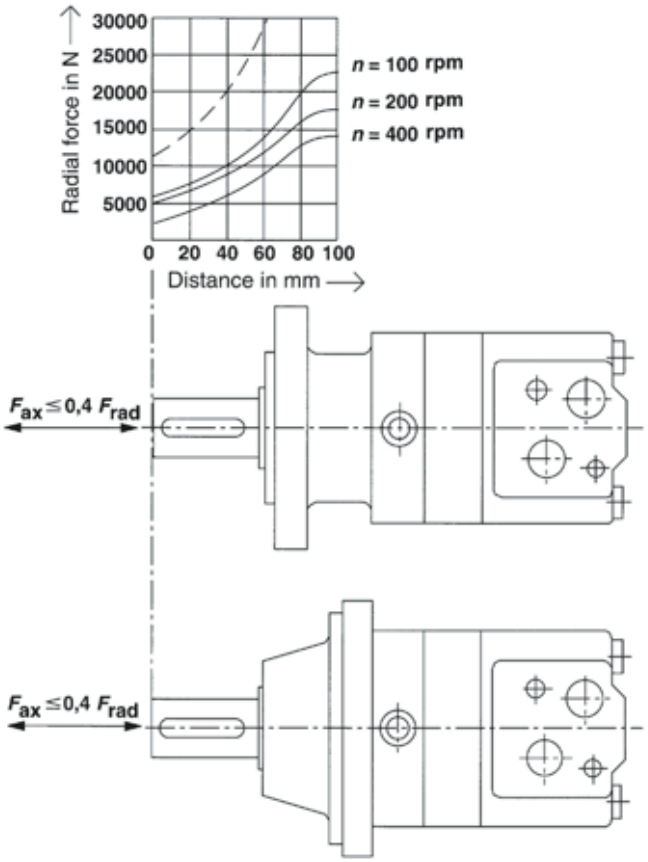

50% OFF ALL PRICES

Abtriebswellen

C - Ø 32 mm zylindrisch mit Passfeder A10 x 8 x 45 Max. Drehmoment: 77 daNm / ***Ø 32 mm straight, parallel key A10 x 8x 45. Max. torque: 77 daNm***

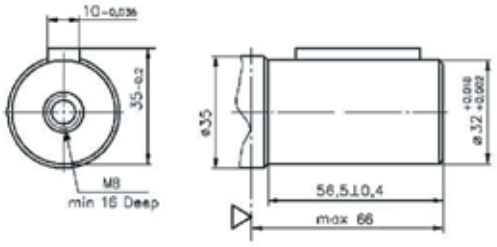

CO - Ø 31,75 mm (1 ¼") zylindrisch mit Passfeder 5/16" x 5/16" x 1¼" BS46. Max. Drehmoment: 77 daNm / ***Ø 31,75 mm (1 ¼") straight, parallel key 5/16" x 5/16" x 1¼" BS46. Max. torque: 77 daNm***

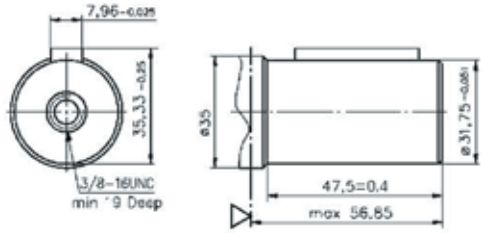

S - verzahnt (SAE 6B). Max. Drehmoment: 34 daNm / ***splined, (SAE 6B). Max. torque: 34 daNm***

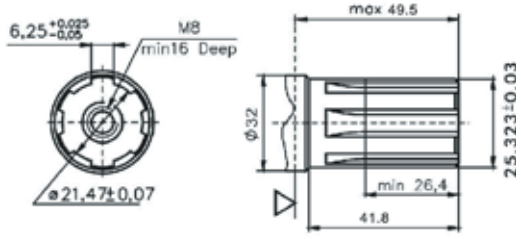

SH - Ø 31,75 mm (1 ¼") verzahnt, 14 Zähne, DP 12/24. Max. Drehmoment: 95 daNm / ***Ø 31,75 mm (1¼") splined, 14T, DP 12/24. Max. torque: 95 daNm***

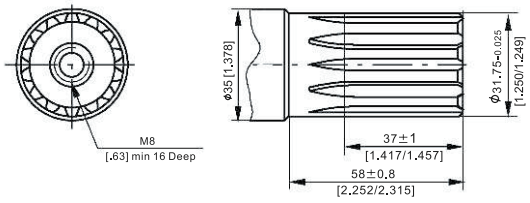

C25 - Ø 25 mm zylindrisch mit Passfeder A8 x 7 x 32. Max. Drehmoment: 34 daNm / ***Ø 25mm straight, parallel key A8 x 7 x 32. Max. torque: 34 daNm***

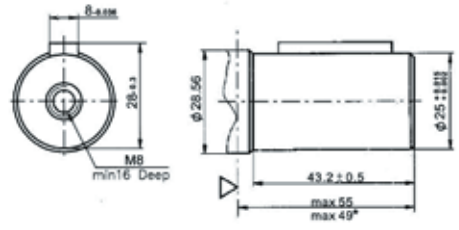

Output shafts

K - Kon. 1:10 mit Passfeder B6 x 6 x 20. Max. Drehmoment: 95 daNm / ***conical 1:10, parallel key B6 x 6 x 20. Max. torque: 95 daNm***

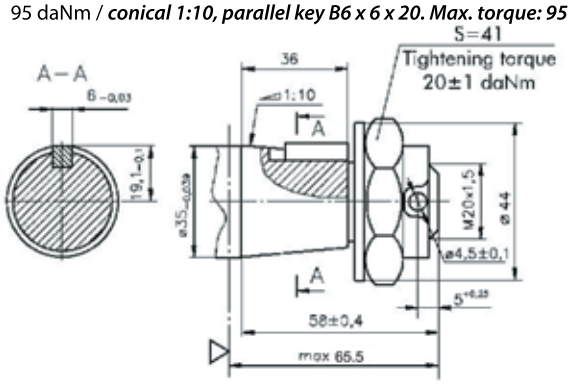

SB - Ø 1 ¼" verzahnt, 14 Zähne, ANSI B92.1-1976. Max. Drehmoment: 77 daNm / ***Ø 1¼" splined, 14T, ANSI B92.1-1976. Max. torque: 77 daNm***

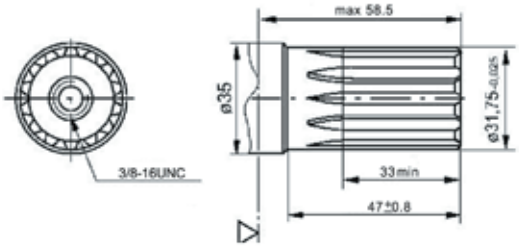

KA - Kon. 1:8, SAE J 501, mit Passfeder 5/16" x 5/16" x 1¼". Max. Drehmoment: 77 daNm / ***conical 1:8, SAE J 501, parallel key 5/16" x 5/16" x 1¼". Max. torque: 77 daNm***

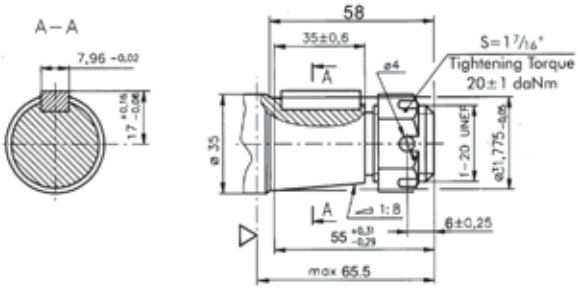

SL - Ø 34,75, P.T.O DIN 9611 Form 1. Max. Drehmoment: 77 daNm / ***Ø 31,75, P.T.O DIN 9611 Form1. Max. torque: 77 daNm***

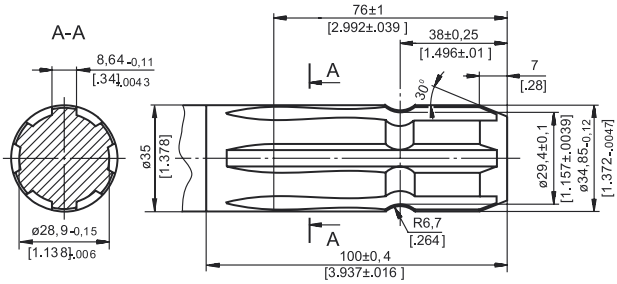

Bestellinformationen

	1	2	3	4	5	6	7
FFPMS							

Pos. 1	Montageflansch / *Mounting flange*
Leer / *Omit*	Quadratflansch 4-loch, SAE A / *Square flange 4-holes SAE A*
F	Magnetoflansch 4-loch / *Magneto mount 4 holes*
A	Ovalflansch 2-loch SAE A/ *Oval flange 2 holes SAE A*
Q	Quadratflansch, 4-loch / *Square flange 4 holes*
W	Radflansch / *Wheel mount*
S	Kurzversion / *Short mount*

Pos. 2	Anschlüsse / Port type
Leer / Omit	Seitl. Anschlüsse / *Side ports*
E	Endanschlüsse (auf Anfrage) / *Rear ports (on requests)*

Pos.3	Schluckvolumen / *Displacement*
80	80 cm^3/U / *80 ccm/REV*
100	100 cm^3/U / *100 ccm/REV*
125	125 cm^3/U / *125 ccm/REV*
160	160 cm^3/U / *160 ccm/REV*
200	200 cm^3/U / *200 ccm/REV*
250	250 cm^3/U / *250 ccm/REV*
315	315 cm^3/U / *315 ccm/REV*
400	400 cm^3/U / *400 ccm/REV*

Pos. 4	Wellenausführungen / *Shaft extensions*
C	Ø 32 mm zylindrisch mit Passfeder A10 x 8 x 45 *Ø 32 mm straight, parallel key A10 x 8x 45.*
CO	Ø 31,75 mm (1 ¼“) zylindrisch mit Passfeder 5/16“ x 5/16“ x 1¼“ *Ø 31,75 mm (1 ¼“) straight, parallel key 5/16“ x 5/16“ x 1¼“*
S	verzahnt SAE 6B / *splined SAE 6B*

Order Information

SH	Ø 31,75 mm (1 ¼“) verzahnt, 14 Zähne, DP 12/24 / *Ø 31,75 mm (1¼“) splined, 14T, DP 12/24.*
C25	Ø 25 mm zylindrisch mit Passfeder A8 x 7 x 32 / *Ø25 mm cylindrical parallel key A8 x 7 x 32*
K	Konisch 1:10 mit Passfeder B6 x 6 x 20 / *Conical 1:10 with key B6 x 6 x 20*
SB	Verzahnt 14 Zähne, DP 12/24 / *splined, 14 T, DP 12/24*
KA	Konisch 1:8 SAE, J501 mit Passfeder 5/16” x 5/16” x 1 1/4” / *Conical 1:8 SAE, J501 with key 5/16” x 5/16” x 1 1/4”*
SL	Ø 34,75 mm P.T.O. DIN 9611 Form 1 / *Ø 34,75 mm P.T.O. DIN 9611 Form 1*

Pos. 5	Anschlüsse / *Porting*
Leer / *Omit*	G ½” / *G ½”*
M	Metrisch / *Metric*
U	7/8-14 UNF, O-Ring / *7/8 -14 UNF, O-ring*
P	½-14 NPTF / *½-14 NPTF*

Pos. 6	Farbe / *Painting*
Leer / *Omit*	Grau / *Grey*
RAL...	+ Ralfarbe (z.B. 7021) / *+ Ral colour (e.g. 7021)l*

Pos. 7	Drehrichtung / *Rotation direction*
Leer / *Omit*	Standarddrehrichtung / *Standard Rotation*
R	Umgekehrte Drehrichtung / *Reverse Rotation*

50% OFF ALL PRICES

HYDRAULIC MOTOR PRICE LIST - BUILD YOUR OWN

FFPMS HYDRAULIC MOTORS

STANDARD: OPTIONS INCLUDED FFPMS	PART NUMBER	PRICE
SIDE PORTS: 2 X G 1/2" (BSP)	FFPMS 80	£243.61
SHAFT T YPE "C" Ø 32MM OR "CO" Ø 31,75MM	FFPMS 100	£246.32
SHAFT T YPE "S" (SAE 6B)	FFPMS 125	£249.15
FLANGE T YPE SAE "A" TYPE "F"	FFPMS 160	£252.12
FLANGE T YPE SAE "A" TYPE "A"	FFPMS 200	£255.20
MAGNETO TYPE FLANGE 4-HOLES	FFPMS 250	£265.61
	FFPMS 315	£285.95
	FFPMS 400	£306.77
OPTIONAL EXTRAS FFPMS		
SPLINED Ø 31,75 12/24 D.PITCH, 30°, Z/T = 14	SH/ SB: ADD	£5.27
TAPERED SHAFT 1:10, Ø 35	TB =K : ADD	£4.27
TAPERED SHAFT 1:8, SAE J501	TA (KA) :ADD	£4.27
P.T.O. SHAFT TIME1 3/8" 6 SPLIND MALE SHAFT	SL : ADD	£10.68
SEAL KIT FFPMH	SEAL KIT FFPMH	£30.34
FLANGE OPTION EXTRAS FFPMS		
SQUARE FLANGE	Q : ADD	£2.78
WHEEL FLANGE	W: ADD	£7.90
SHORT VERSION "S"	S : MUNUS	£21.36
ULTRA SHORT VERSION "Z"	Z: (CPMSU) MINUS	£21.36
SEAL KIT FFPMS	SEAL KIT FFMS	£30.34

HYDRAULIC MOTOR PRICE LIST - COMPLETE

PART NUMBER	DESCRIPTION	PRICE
FFPMS100C	HYDRAULIC MOTOR FFPMS100C, 99,8 CCM/REV, SHAFT 32MM, 4-HOLE FLANGE, G 1/2 INCH	£246.33
FFPMS100C25	HYDRAULIC MOTOR FFPMS100C25, 99,8 CCM/REV, SHAFT 25MM, 4-HOLE FLANGE, G 1/2 INCH	£246.33
FFPMS100SB	HYDRAULIC MOTOR FFPMS100SB, 99,8 CCM/REV, SPLINED 1 1/4" 12/24 D.PITCH, 30°, Z/T = 14,	£251.69
FFPMS100SH	HYDRAULIC MOTOR FFPMS100SH, 99,8 CCM/REV, SPLINED 31,75 12/24 D.PITCH, 30°, Z/T = 14, G 1/2 INCH	£251.69
FFPMS100SL	HYDRAULIC MOTOR FFPMS100SL, 99,8 CCM/REV, P.T.O. SHAFT 1 3/8", G 1/2 INCH	£257.01
FFMS125C	HYDRAULIC MOTOR FFPMS125C, 125,2 CCM/REV, SHAFT 32MM, 4-HOLE FLANGE, G 1/2 INCH	£249.15
FFPMS125C25	HYDRAULIC MOTOR FFPMS125C25, 125,2 CCM/REV, 25MM WELLE, G 1/2 INCH	£249.15
FFPMS125SH	HYDRAULIC MOTOR FFPMS125SH, 125,2 CCM/REV, SPLINED 31,75 12/24 D.PITCH, 30°, Z/T = 14, G 1/2 INCH	£254.50
FFPMS125SL	HYDRAULIC MOTOR FFPMS125SL, 125,2 CCM/REV, P.T.O. SHAFT 1 3/8"", G 1/2 INCH	£259.83
FFPMS160C	HYDRAULIC MOTOR FFPMS160C, 159,5 CCM/REV, SHAFT 32MM, 4-HOLE FLANGE, G 1/2 INCH	£249.15
FFPMS160S	HYDRAULIC MOTOR FFPMS160SH, 159,5 CCM/REV, SPLINED SAE 6B, G 1/2 INCH	£252.12
FFPMS160SH	HYDRAULIC MOTOR FFPMS160SH, 159,5 CCM/REV, SPLINED 31,75 12/24 D.PITCH, 30°, Z/T = 14, G 1/2 INCH	£257.46
FFPMS160SL	HYDRAULIC MOTOR FFPMS160SL, 159,5 CCM/REV, P.T.O. SHAFT 1 3/8", G 1/2 INCH	£262.80
FFPMS200C	HYDRAULIC MOTOR FFPMS200C, 200 CCM/REV, SHAFT 32MM, 4-HOLE FLANGE, G 1/2 INCH	£255.18
FFPMS200C25	HYDRAULIC MOTOR FFPMS200C25, 99,8 CCM/REV, SHAFT 25MM, 4-HOLE FLANGE, G 1/2 INCH	£255.18
FFPMS200S	HYDRAULIC MOTOR FFPMS200S, 200,0 CCM/REV, SPLINED SAE 6B, G 1/2 INCH	£255.18
FFPMS200SH	HYDRAULIC MOTOR FFPMS200SH, 200,0 CCM/REV, SPLINED 31,75, 4-HOLE FLANGE, G 1/2 INCH	£259.01
FFPMS200SL	HYDRAULIC MOTOR FFPMS200SL, 200,0 CCM/REV, P.T.O. SHAFT 1 3/8", G 1/2 INCH"	£259.01
FFPMS250C	HYDRAULIC MOTOR FFPMS250C, 252,3 CCM/REV, SHAFT 32MM, 4-HOLE FLANGE, G 1/2 INCH	£265.61
FFPMS250K	HYDRAULIC MOTOR FFPMS250K, 252,3 CM3/U, CONIC SHAFT 1:10, Ø 35, 4-HOLE SAE A FLANGE, G1/2 INCH	£269.88
FFPMS250SH	HYDRAULIC MOTOR FFPMS250SH, 252,3 CCM/REV, SPLINED 31,75 12/24 D.PITCH, 30°, Z/T = 14, G 1/2 INCH	£270.97
FFPMS250SL	HYDRAULIC MOTOR FFPMS250SL, 252,3 CCM/REV, P.T.O. SHAFT 1 3/8", G 1/2 INCH	£276.30
FFPMS315C	HYDRAULIC MOTOR FFPMS315C, 315,1 CCM/REV, SHAFT 32MM, 4-HOLE FLANGE, G 1/2 INCH	£285.94
FFPMS315K	HYDRAULIC MOTOR FFPMS315K, 315,1 CM3/U, CONIC SHAFT 1:10, Ø 35, 4-HOLE SAE A FLANGE, G1/2 INCH	£290.21
FFPMS315SBU	HYDRAULIC MOTOR FFPMS315SBU, 315,1 CCM/REV, SPLINED 1 1/4" 12/24 D.PITCH, 30°, Z/T = 14, 7/8-14UNF	£285.94
FFPMS315SH	HYDRAULIC MOTOR FFPMS315SH, 315,1 CCM/REV, SPLINED 31,75 12/24 D.PITCH, 30°, Z/T = 14, G 1/2 INCH	£291.27
FFPMS315SL	HYDRAULIC MOTOR FFPMS315SL, 315,1 CCM/REV, P.T.O. SHAFT 1 3/8", G 1/2 INCH	£296.62
FFPMS400C	HYDRAULIC MOTOR FFPMS400C, 397 CCM/REV, SHAFT 32MM, 4-HOLE FLANGE, G 1/2 INCH	£306.76
FFPMS400C25	HYDRAULIC MOTOR FFPMS400C25, 397,0 CCM/REV, SHAFT 25MM, 4-HOLE FLANGE, G 1/2 INCH	£306.76
FFPMS400S	HYDRAULIC MOTOR FFPMS400S, 397 CCM/REV, SAE 6B SHAFT 1 3/8"", G 1/2 INCH	£306.76
FFPMS400SH	HYDRAULIC MOTOR FFPMS400SH, 397 CCM/REV, SPLINED 31,75 12/24 D.PITCH, 30°, Z/T = 14, G 1/2 INCH	£312.11
FFPMS400SL	HYDRAULIC MOTOR FFPMS400SL, 397 CCM/REV, P.T.O. SHAFT 1 3/8", G 1/2 INCH	£317.44
FFPMS80C	HYDRAULIC MOTOR FFPMS80C, 80,8 CCM/REV, SHAFT 32MM, 4-HOLE FLANGE, G 1/2 INCH	£243.61
FFPMS80SH	HYDRAULIC MOTOR FFPMS80SH, 80,8 CCM/REV, SPLINED 31,75 12/24 D.PITCH, 30°, Z/T = 14, G 1/2 INCH	£248.96
FFPMS80SL	HYDRAULIC MOTOR FFPMS80SL, 80,8 CCM/REV, P.T.O. SHAFT 1 3/8", G 1/2 INCH	£254.29
FFPMSA100C	HYDRAULIC MOTOR FFPMSA100C, 98,6 CCM/REV, SHAFT 32MM, 2-HOLE FLANGE SAE A, G 1/2 INCH	£246.33
FFPMSA100C25	HYDRAULIC MOTOR FFPMSA100C25, 99,8 CCM/REV, SHAFT 25MM, 2-HOLE FLANGE SAE A, G 1/2 INCH	£246.33

FLOWFIT HYDRAULIC MOTOR PRICE LIST - COMPLETE

PART NUMBER	DESCRIPTION	PRICE
FFPMSA125C	HYDRAULIC MOTOR FFPMSA125C, 125,2 CCM/REV, SHAFT 32MM, 2-HOLE FLANGE SAE A, G 1/2 INCH	£249.15
FFPMSA125C25	HYDRAULIC MOTOR FFPMSA125C25, 125,2 CCM/REV, SHAFT 25MM, 2-HOLE FLANGE SAE A, G 1/2 INCH	£249.15
FFPMSA160C	HYDRAULIC MOTOR FFPMSA160C, 159,5 CCM/REV, SHAFT 32MM, 2-HOLE FLANGE SAE A, G 1/2 INCH	£252.12
FFPMSA160C25	HYDRAULIC MOTOR FFPMSA160C25, 159,5 CCM/REV, SHAFT 25MM, 2-HOLE FLANGE SAE A, G 1/2 INCH	£252.12
FFPMSA200C	HYDRAULIC MOTOR FFPMSA200C, 201,2 CCM/REV, SHAFT 32MM, 2-HOLE FLANGE SAE A, G 1/2 INCH	£254.04
FFPMSA200C25	HYDRAULIC MOTOR FFPMSA200C25, 200 CCM/REV, SHAFT 25MM, 2-HOLE FLANGE SAE A, G 1/2 INCH	£254.04
FFPMSA250C	HYDRAULIC MOTOR FFPMSA250C, 252,3 CCM/REV, SHAFT 32MM, 2-HOLE FLANGE SAE A, G 1/2 INCH	£265.61
FFPMSA250C25	HYDRAULIC MOTOR FFPMSA250C25, 252,3 CCM/REV, SHAFT 25MM, 2-HOLE FLANGE, G 1/2 INCH	£265.61
FFPMSA315C25	HYDRAULIC MOTOR FFPMSA315C25, 315,1 CCM/REV, SHAFT 25MM, 2-HOLE FLANGE, G 1/2 INCH	£285.94
FFPMSA315KA	HYDRAULIC MOTOR FFPMSA315KA, 315,1 CCM/REV, TAPERED SHAFT 1:8, 2-HOLE FLANGE SAE A, G 1/2 INCH	£290.21
FFPMSA400S	HYDRAULIC MOTOR FFPMSA400S, 397,0 CCM/REV, SPLINED SAE6B, Z/T = 6	£306.76
FFPMSA400SBU	HYDRAULIC MOTOR FFPMSA400SBU, 397,0 CCM/REV, SPLINED 1 1/4" 12/24 D.PITCH, 30°, Z/T = 14, 7/8-14UNF	£306.76
FFPMSA80C	HYDRAULIC MOTOR FFPMSA80C, 99,8 CCM/REV, SHAFT 32MM, 2-HOLE FLANGE SAE A, G 1/2 INCH	£243.61
FFPMSA80C25	HYDRAULIC MOTOR FFPMSA80C25, 99,8 CCM/REV, SHAFT 25MM, 2-HOLE FLANGE SAE A, G 1/2 INCH	£243.61
FFPMSF100C	HYDRAULIC MOTOR FFPMSF100C, 99,8 CCM/REV, SHAFT 32MM, 4-HOLE MAGNETO FLANGE SAE A, G 1/2 INCH	£246.33
FFPMSF125C	HYDRAULIC MOTOR FFPMSF125C, 125,2 CCM/REV, SHAFT 32MM, 4-HOLE FLANGE, G 1/2 INCH	£249.15
FFPMSF160C	HYDRAULIC MOTOR FFPMSF160C, 159,5 CCM/REV, SHAFT 32MM, 4-HOLE MAGNETO FLANGE SAE A, G 1/2 INCH	£252.12
FFPMSF200C	HYDRAULIC MOTOR FFPMSF200C, 200 CCM/REV, SHAFT 32MM, 4-HOLE MAGNETO FLANGE, G 1/2 INCH	£254.04
FFPMSF200C25	HYDRAULIC MOTOR FFPMSF200C25, 200,0 CCM/REV, SHAFT 25MM, 4-HOLE MAGNETO FLANGE, G 1/2 INCH	£255.18
FFPMSF315C	HYDRAULIC MOTOR FFPMSF315C, 316,8 CCM/REV, SHAFT 32MM, 4-HOLE MAGNETO FLANGE, G 1/2 INCH	£285.94
FFPMSF315C25	HYDRAULIC MOTOR FFPMSF315C25, 315,8 CCM/REV, SHAFT 25MM, 4-HOLE MAGNETO FLANGE, G 1/2 INCH	£285.94
FFPMSF315SH	HYDRAULIC MOTOR FFPMSF315SH, 315,1 CCM/REV, SPLINED SHAFT Ø31,75, 4-HOLE MAGNETO FLANGE, G 1/2 INCH	£291.30
FFPMSS100	HYDRAULIC MOTOR SHORT FFPMSS100, 99,8 CCM/REV, G 1/2 INCH	£224.97
FFPMSS125	HYDRAULIC MOTOR SHORT FFPMSS125, 125,2 CCM/REV, G 1/2 INCH	£227.79
FFPMSS160	HYDRAULIC MOTOR SHORT FFPMSS160, 159,5 CCM/REV, G 1/2 INCH	£230.76
FFPMSS200	HYDRAULIC MOTOR SHORT FFPMSS200, 200 CCM/REV, G 1/2 INCH	£233.83
FFPMSS250	HYDRAULIC MOTOR SHORT FFPMSS250, 252,2 CCM/REV, G 1/2 INCH	£244.27
FFPMSS315	HYDRAULIC MOTOR SHORT FFPMSS315, 315,1 CCM/REV, G 1/2 INCH	£264.57
FFPMSS400	HYDRAULIC MOTOR SHORT FFPMSS400, 397,0 CCM/REV, G 1/2 INCH	£285.41
FFPMSS80	HYDRAULIC MOTOR SHORT FFPMSS80, 80,8 CCM/REV, G 1/2 INCH	£222.26
FFPMSU125	HYDRAULIC MOTOR ULTRA-SHORT FFPMSU125, 125,2 CCM/REV, G 1/2 INCH	£227.79
FFPMSU160	HYDRAULIC MOTOR ULTRA-SHORT FFPMSU160, 159,5 CCM/REV, G 1/2 INCH	£230.77
FFPMSU200	HYDRAULIC MOTOR ULTRA-SHORT FFPMSU200, 200 CCM/REV, G 1/2 INCH	£233.83
FFPMSU250	HYDRAULIC MOTOR ULTRA-SHORT FFPMSU250, 252,3 CCM/REV, G 1/2 INCH	£244.27
FFPMSU315	HYDRAULIC MOTOR ULTRA-SHORT FFPMSU315, 315,1 CCM/REV, G 1/2 INCH	£264.59
FFPMSU400	HYDRAULIC MOTOR ULTRA-SHORT FFPMSU400, 397,0 CCM/REV, G 1/2 INCH	£285.41
FFPMSW100C	HYDRAULIC MOTOR FFPMSW100C, 99,8 CCM/REV, CYL. SHAFT 32MM, WHEEL FLANGE, G 1/2 INCH,	£254.24
FFPMSW100K	HYDRAULIC MOTOR FFPMSW100K, 99,8 CCM/REV, CONICAL SHAFT 1:10, WHEEL FLANGE, G 1/2 INCH,	£258.49
FFPMSW125C	HYDRAULIC MOTOR FFPMSW125C, 125,2 CCM/REV, CYL. SHAFT 32MM, WHEEL FLANGE, G 1/2 INCH,	£257.05
FFPMSW125K	HYDRAULIC MOTOR FFPMSW125K, 125,2 CCM/REV, CONICAL SHAFT 1:10, WHEEL FLANGE, G 1/2 INCH,	£261.31
FFPMSW160C	HYDRAULIC MOTOR FFPMSW160C, 159,5 CCM/REV, CYL. SHAFT 32MM, WHEEL FLANGE, , G 1/2 INCH	£260.02
FFPMSW160K	HYDRAULIC MOTOR FFPMSW160K, 159,5 CCM/REV, CONICAL SHAFT 1:10, WHEEL FLANGE, G 1/2 INCH,	£264.28
FFPMSW200C	HYDRAULIC MOTOR FFPMSW200C, 200,0 CCM/REV, CYL. SHAFT 32MM, WHEEL FLANGE, , G 1/2 INCH	£263.08
FFPMSW200K	HYDRAULIC MOTOR FFPMSW200K, 200,0 CCM/REV, CONICAL SHAFT 1:10, WHEEL FLANGE, G 1/2 INCH,	£267.34
FFPMSW250C	HYDRAULIC MOTOR FFPMSW250C, 252,3 CCM/REV, CYL. SHAFT 32MM, WHEEL FLANGE, , G 1/2 INCH	£273.51
FFPMSW250K	HYDRAULIC MOTOR FFPMSW250K, 252,3 CCM/REV, CONICAL SHAFT 1:10, WHEEL FLANGE, G 1/2 INCH,	£277.77
FFPMSW315C	HYDRAULIC MOTOR FFPMSW315C, 315,1 CCM/REV, CYL. SHAFT 32MM, WHEEL FLANGE, , G 1/2 INCH	£293.83
FFPMSW315K	HYDRAULIC MOTOR FFPMSW315K, 315,1 CCM/REV, CONICAL SHAFT 1:10, WHEEL FLANGE, G 1/2 INCH,	£298.10
FFPMSW315KA	HYDRAULIC MOTOR FFPMSW315K, 315,1 CCM/REV, CONICAL SHAFT 1:8, WHEEL FLANGE, G 1/2 INCH,	£298.10
FFPMSW400C	HYDRAULIC MOTOR FFPMSW400C, 397,0 CCM/REV, CYL. SHAFT 32MM, WHEEL FLANGE, , G 1/2 INCH	£314.66
FFPMSW400K	HYDRAULIC MOTOR FFPMSW400K, 397,0 CCM/REV, TAPERED SHAFT 1:10, WHEEL FLANGE, G 1/2 INCH	£318.93
FFPMSW80C	HYDRAULIC MOTOR FFPMSW80C, 80,8 CCM/REV, CYL. SHAFT 32MM, WHEEL FLANGE, , G 1/2 INCH	£251.52
FFPMSW80K	HYDRAULIC MOTOR FFPMSW80K, 80,8 CCM/REV, CONICAL SHAFT 1:10, WHEEL FLANGE, G 1/2 INCH,	£255.77

50% OFF ALL PRICES

FFPMSY Hydraulik Motor

- Verstärkte Version
- Modell Verteilerventil mit Geroller
- Geringes Startmoment und hoher Wirkungsgrad
- Höhere Druckfestigkeit
- Internes Rückschlagventil
- Verwendung ohne Leckölanschluss möglich
- Schrägrollenlager für hohe Radialbelastung

FFPMSY Hydraulic Motor

- *Reinforced version*
- *Disk valve type with geroler*
- *Low starting torque and high efficiency*
- *Designed for higher pressure*
- *Internal check valve*
- *Usage without drain line possible*
- *Tapered roller bearing for high radial load*

TYP / *Type*		FFPMSY 160	FFPMSY 200	FFPMSY 250	FFPMSY 315	FFPMSY 400	FFPMSY 475
Schluckvolumen / *Displacement* [cm³/REV]		154	194	243	311	394	475
Max. Drehzahl / *Max. Speed* [RPM]	Dauerbetrieb / *Cont.*	470	375	300	240	185	155
	Int.(1)	560	450	360	280	225	185
Max. Drehmoment / *Max. Torque* [daNm]	Dauerbetrieb / *Cont.*	48.5	58.6	70.8	88	88	91
	Int.(1)	54	64.5	80.6	96	96	96
Max. Leistungsabgabe / *Max. Output Power* [kW]	Dauerbetrieb / *Cont.*	18.1	18.1	18	17	11	9
	Int.(1)	25	24	23.8	20.2	12	11
Max. Druckgefälle / *Max. Pressure Drop* [bar]	Dauerbetrieb / *Cont.*	210	210	200	200	160	140
	Int.(1)	225	225	225	225	175	150
	Spitze / *Peak* (2)	225	225	225	225	200	175
Max. Ölstrom / *Max. Oil flow* [l/min]	Dauerbetrieb / *Cont*	75	75	75	75	75	75
	Int.(1)	90	90	90	90	90	90
Max. Eingangsdruck / *Max. Input Pressure* [bar]	Dauerbetrieb / *Cont.*	250	250	250	250	250	250
	Int.(1)	300	300	300	300	300	300
Gewicht / *Weight* [kg]		10.7	11.1	11.6	12.3	13.2	14.3

(1) Intermittierender Betrieb max. 6 Sekunden / Minute
(2) Spitzenbetrieb max. 0,6 Sekunden / Minute

(1) Intermittend operation rating applies to 6 sec. of every minute
(2) Peak load rating applies to 0,6 sec of every minute

Leistungsdaten

Performance data

FFPMSY 160 (154 cm³/U)

Durchflussmenge / *Oil flow* (l/min)	Druck / *pressure* (bar) 35	70	105	140	175	210 (Max. cont.)	225 (Max. Int.)	
15	7,0	14,2	21,5	29,8	37,2	43,5	47,6	daNm
	93	**91**	**89**	**85**	**80**	**76**	**58**	RPM
30	7,3	15,1	22,5	31,2	38,2	45,6	49,2	
	189	**187**	**181**	**176**	**170**	**162**	**153**	
40	7,5	15,2	22,8	31,4	38,3	45,4	48,8	
	252	**250**	**246**	**239**	**234**	**228**	**212**	
50	7,0	14,8	22,5	30,5	37,2	44,5	48,0	
	313	**310**	**306**	**298**	**293**	**285**	**272**	
60	6,8	14,3	21,8	29,6	37,0	44,2	48,0	
	378	**376**	**370**	**362**	**353**	**346**	**332**	
75 (Max. cont.)	6,2	14,0	21,1	29,1	36,5	43,9	47,5	
	475	**469**	**461**	**450**	**441**	**432**	**414**	
90 (Max. int.)	5,9	13,1	20,2	28,6	35,7	42,5	46,0	
	567	**561**	**554**	**543**	**532**	**520**	**509**	

FFPMSY 200 (194 cm³/U)

Durchflussmenge / *Oil flow* (l/min)	Druck / *pressure* (bar) 35	70	105	140	175	210 (Max. cont.)	225 (Max. Int.)	
15	8,7	17,9	27,3	37,1	47,1	56,2	61,0	daNm
	74	**73**	**71**	**68**	**64**	**60**	**48**	RPM
30	9,1	19,0	28,8	38,6	48,9	57,2	61,8	
	150	**148**	**143**	**140**	**134**	**128**	**119**	
40	9,4	19,3	29,6	39,4	49,8	58,4	64,5	
	198	**195**	**192**	**188**	**183**	**178**	**167**	
50	9,0	19,1	29,2	38,9	49,3	58,0	63,4	
	248	**246**	**241**	**236**	**230**	**223**	**212**	
60	8,5	18,5	27,9	38,2	48,3	57,5	62,2	
	300	**295**	**288**	**281**	**273**	**263**	**251**	
75 (Max. cont.)	7,8	17,6	27,1	37,0	47,2	56,1	61,0	
	374	**370**	**364**	**360**	**352**	**340**	**331**	
90 (Max. int.)	6,8	16,3	26,5	36,1	45,6	54,5	59,9	
	443	**440**	**435**	**428**	**424**	**413**	**400**	

FFPMSY 250 (243 cm³/U)

Durchflussmenge / *Oil flow* (l/min)	Druck / *pressure* (bar) 35	70	105	140	175	200 (Max. cont.)	225 (Max. Int.)	
15	11,0	23,1	35,1	46,2	58,5	68,1	77,8	daNm
	59	**58**	**56**	**53**	**50**	**46**	**35**	RPM
30	11,6	23,6	35,9	47,5	59,7	70,0	79,0	
	119	**117**	**114**	**108**	**102**	**92**	**80**	
40	11,8	24,1	36,3	48,0	59,9	70,6	79,6	
	162	**159**	**156**	**150**	**143**	**134**	**121**	
50	11,1	23,4	35,2	47,2	59,1	69,3	78,8	
	203	**201**	**197**	**191**	**182**	**173**	**158**	
60	10,6	22,4	34,5	46,2	58,2	68,5	77,2	
	244	**242**	**237**	**230**	**220**	**208**	**194**	
75 (Max. cont.)	10,1	21,4	34,0	45,4	57,0	67,0	76,0	
	303	**299**	**294**	**285**	**272**	**260**	**244**	
90 (Max. int.)	9,3	20,9	33,5	44,7	55,9	65,7	74,9	
	363	**359**	**354**	**348**	**340**	**328**	**303**	

50% OFF ALL PRICES

Leistungsdaten

FFPMSY 315 (311 cm³/U)

Durchflussmenge / *Oil flow* (l/min)	Druck / *pressure* (bar)							
		35	70	105	140	175	200 (Max. cont.)	225 (Max. Int.)
	15	14,8	30,4	45,6	61,3	76,2	87,9	97,8 daNm
		48	**47**	**45**	**43**	**41**	**39**	**27** RPM
	30	15,5	31,4	46,5	63,5	77,8	88,4	98,8
		95	**93**	**91**	**89**	**86**	**82**	**67**
	40	16,0	32,1	47,9	65,0	76,6	90,6	99,7
		127	**125**	**121**	**117**	**115**	**109**	**91**
	50	15,5	31,4	46,5	63,8	78,0	88,6	98,8
		159	**157**	**153**	**149**	**145**	**142**	**128**
	60	15,1	30,6	45,3	62,0	76,5	88,6	97,6
		187	**185**	**181**	**176**	**169**	**157**	**143**
Max. cont.	75	14,6	30,0	44,5	61,3	75,5	87,5	96,6
		238	**236**	**232**	**227**	**224**	**220**	**196**
Max. int.	90	13,5	28,4	43,6	60,1	74,0	86,3	95,2
		286	**283**	**278**	**272**	**265**	**257**	**232**

Performance data

FFPMSY 400 (394 cm³/U)

Durchflussmenge / *Oil flow* (l/min)	Druck / *pressure* (bar)						
		35	70	105	140	160 (Max. cont.)	175 (Max. Int.)
	15	18,6	37,9	57,8	77,9	89,6	98,6 daNm
		37	**36**	**35**	**33**	**31**	**29** RPM
	30	19,0	38,8	59,0	79,1	90,5	99,1
		75	**73**	**71**	**68**	**65**	**61**
	40	19,5	39,4	59,6	79,7	91,2	99,8
		99	**97**	**95**	**93**	**90**	**85**
	50	19,1	38,8	58,7	78,5	90,4	98,3
		125	**123**	**118**	**114**	**109**	**102**
	60	18,6	38,8	58,7	78,5	90,4	98,3
		149	**146**	**142**	**137**	**131**	**122**
Max. cont.	75	18,1	37,2	57,6	77,0	89,1	97,3
		187	**183**	**177**	**171**	**164**	**153**
Max. int.	90	17,6	36,7	57,1	76,6	88,3	96,5
		226	**221**	**214**	**208**	**199**	**183**

FFPMSY 475 (475 cm³/U)

Durchflussmenge / *Oil flow* (l/min)	Druck / *pressure* (bar)					
		35	70	105	140 (Max. cont.)	150 (Max. Int.)
	15	21,8	43,9	66,1	89,2	99,5 daNm
		30	**29**	**28**	**27**	**25** RPM
	30	22,3	45,0	67,6	91,0	100,2
		61	**60**	**58**	**56**	**53**
	40	22,8	46,1	68,9	92,7	101,7
		82	**80**	**77**	**74**	**68**
	50	22,4	45,6	68,2	92,0	100,8
		103	**101**	**97**	**92**	**86**
	60	22,0	45,1	67,7	91,3	99,8
		123	**121**	**118**	**112**	**105**
Max. cont.	75	21,2	44,3	66,4	90,1	98,0
		155	**153**	**147**	**140**	**132**
Max. int.	90	19,6	42,1	64,3	87,7	95,9
		186	**184**	**178**	**170**	**157**

Abmessungen

Dimensions

Anschlüsse / *Porting*

Seitenanschluss / ***Side Ports***

Version G M U

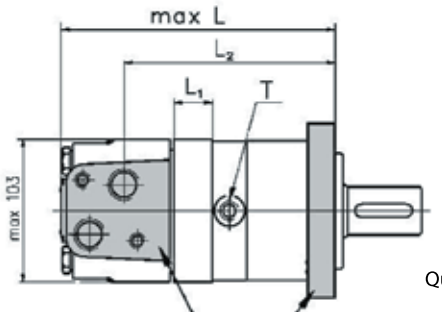

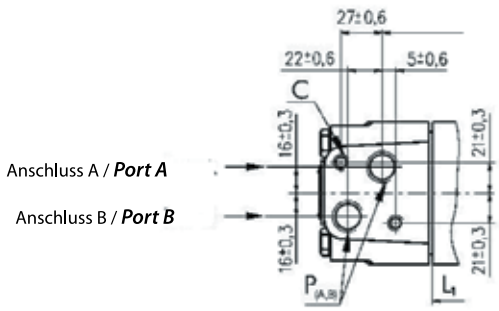

E Endanschluss auf Anfrage / ***Rear ports on request***

An-schluss / *Port*	Versionen / *Versions*		
	Leer / *Omit*	M	U
P(A,B)	G ½"	M22 x 1,5	7/8-14 O-Ring
T	G ¼"	M14 x 1,5	7/16-20 UNF
C	2 x M10	2 x M10	5/16-18 UNC

W Radflansch / ***Wheelflange***

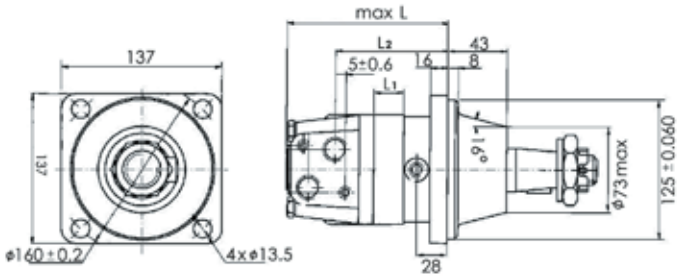

Typ / *Type*	L	L_2	Typ / *Type*	L	L_2	Typ / *Type*	L	L_2	L_1
FFPMSY(F) 160	181	137,5	FFPMSYW 160	143,5	100	FFPMSYQ 160	193	149,5	27
FFPMSY(F) 200	188	144,5	FFPMSYW 200	150,5	107	FFPMSYQ 200	200	156,5	34
FFPMSY(F) 250	196	152,5	FFPMSYW 250	158,5	115	FFPMSYQ 250	208	164,5	42
FFPMSY(F) 315	208	164,5	FFPMSYW 315	170,5	127	FFPMSYQ 315	220	176,5	54
FFPMSY(F) 400	223	179,5	FFPMSYW 400	185,5	142	FFPMSYQ 400	235	191,5	69
FFPMSY(F) 475	237	193,5	FFPMSYW 475	199,5	156	FFPMSYQ 475	249	205,5	83

Quadratflansch SAE A / ***Square flange SAE A***

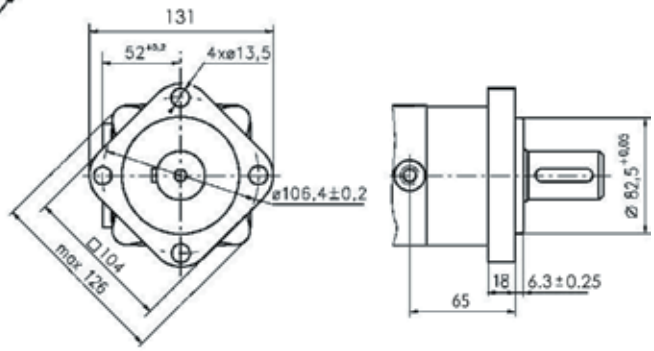

F Magneto Flansch / ***Magneto Mount*** (4-Loch / ***4 holes***)

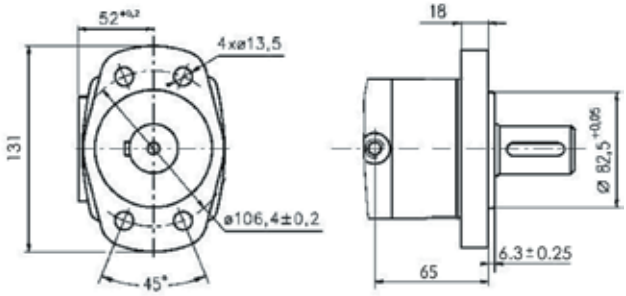

A- Ovalflansch / ***Oval Mount*** SAE A (2-Loch) / ***2 holes***

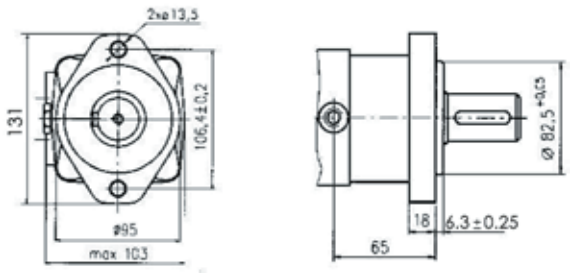

Q Quadratflansch / ***Square flange*** (4 Schrauben / ***4 bolts***)

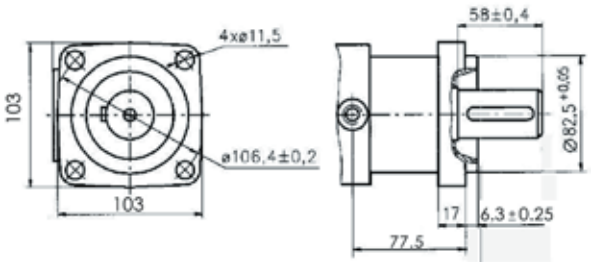

50% OFF ALL PRICES

Bestellinformationen

	1	2	3	4	5	6	7
FFPMSY							

Pos. 1	Montageflansch / *Mounting flange*
Leer / *Omit*	Quadratflansch 4-loch, SAE A / *Square flange 4-holes SAE A*
F	Magnetoflansch 4-loch / *Magneto mount 4 holes*
A	Ovalflansch 2-loch SAE A/ *Oval flange 2 holes SAE A*
Q	Quadratflansch, 4-loch / *Square flange 4 holes*
W	Radflansch / *Wheel mount*

Pos. 2	Anschlüsse / Port type
Leer / Omit	Seitl. Anschlüsse / *Side ports*
E	Endanschlüsse (auf Anfrage) / *Rear ports (on requests)*

Pos.3	Schluckvolumen / *Displacement*
160	160 cm^3/U / *160 ccm/REV*
200	200 cm^3/U / *200 ccm/REV*
250	250 cm^3/U / *250 ccm/REV*
315	315 cm^3/U / *315 ccm/REV*
400	400 cm^3/U / *400 ccm/REV*
475	475 cm^3/U / *475 ccm/REV*

Pos. 4	Wellenausführungen / *Shaft extensions*
C	Ø 32 mm zylindrisch mit Passfeder A10 x 8 x 45 *Ø 32 mm straight, parallel key A10 x 8x 45.*
CO	Ø 31,75 mm (1 ¼“) zylindrisch mit Passfeder 5/16“ x 5/16“ x 1¼“ *Ø 31,75 mm (1 ¼“) straight, parallel key 5/16“ x 5/16“ x 1¼“*
S	verzahnt SAE 6B / *splined SAE 6B*

Order Information

SH	Ø 31,75 mm (1 ¼“) verzahnt, 14 Zähne, DP 12/24 / *Ø 31,75 mm (1¼“) splined, 14T, DP 12/24.*
K	Konisch 1:10 mit Passfeder B6 x 6 x 20 / *Conical 1:10 with key B6 x 6 x 20*
SB	Verzahnt 14 Zähne, DP 12/24 / *splined, 14 T, DP 12/24*
KA	Konisch 1:8 SAE, J501 mit Passfeder 5/16” x 5/16” x 1 1/4” / *Conical 1:8 SAE, J501 with key 5/16” x 5/16” x 1 1/4”*
SL	Ø 34,75 mm P.T.O. DIN 9611 Form 1 / *Ø 31,75 mm P.T.O. DIN 9611 Form 1*

Pos. 5	Anschlüsse / *Porting*
Leer / *Omit*	G ½” / *G ½”*
M	Metrisch / *Metric*
U	⅞-14 UNF, O-Ring / *⅞-14-UNF, O-ring*
P	½-14 NPTF / *½-14 NPTF*

Pos. 6	Farbe / *Painting*
Leer / *Omit*	Grau / *Grey*
RAL...	+ Ralfarbe (z.B. 7021) / *+ Ral colour (e.g. 7021)l*

Pos. 7	Drehrichtung / *Rotation direction*
Leer / *Omit*	Standarddrehrichtung / *Standard Rotation*
R	Umgekehrte Drehrichtung / *Reverse Rotation*

PRICES FOR MOTOR SERIES FFPMSY ON APPLICATION

FFPMT Hydraulik Motor

- Modell Verteilerventil mit Geroller
- Geringes Startmoment und hoher Wirkungsgrad
- Ideal für enge Bauräume
- Internes Rückschlagventil
- Verwendung ohne Leckölanschluss möglich
- Schrägrollenlager für hohe Radial belastung

FFPMT Hydraulic Motor

- *Disk valve type with geroler*
- *Low starting torque and high efficiency*
- *Optimized for small spaces*
- *Internal check valve*
- *Usage without drain line possible*
- *Tapered roller bearing for high radial load*

TYP / *Type*		FFPMT 160	FFPMT 200	FFPMT 250	FFPMT 315	FFPMT 400	FFPMT 500	FFPMT 630	FFPMT 800
Schluckvolumen / *Displacement* [cm^3/REV]		161.1	201.4	251.8	326.3	410.9	523.6	629.1	801.8
Max. Drehzahl / *Max. Speed* [RPM]	Dauerbetrieb / *Cont.*	625	625	500	380	305	240	196	154
	Int.(1)	780	750	600	460	365	285	233	185
Max. Drehmoment / *Max. Torque* [daNm]	Dauerbetrieb / *Cont.*	47	59	73	95	108	122	131.8	146.4
	Int.(1)	56	71	88	114	126	137	149.8	152
	Spitze / *Peak* (2)	66.9	83.8	103.6	134.6	145	164.4	161.9	166.5
Max. Leistungsabgabe / *Max. Output Power* [kW]	Dauerbetrieb / *Cont.*	27.7	34.9	34.5	34.9	31.2	28.8	25.3	22.2
	Int.(1)	32	40	40	40	35	35	27.5	26.8
Max. Druckgefälle / *Max. Pressure Drop* [bar]	Dauerbetrieb / *Cont.*	200	200	200	200	180	160	140	125
	Int.(1)	240	240	240	240	210	180	160	130
	Spitze / *Peak* (2)	280	280	280	280	240	210	190	160
Max. Ölstrom / *Max. Oil flow* [l/min]	Dauerbetrieb / *Cont*	80	100	100	100	100	100	100	100
	Int.(1)	125	150	150	150	150	150	150	150
Max. Eingangsdruck / *Max. Input Pressure* [bar]	Dauerbetrieb / *Cont.*	210	210	210	210	210	210	210	210
	Int.(2)	300	300	300	300	300	300	300	300
Gewicht / *Weight* [kg]		19.5	20	20.5	21	22	23	24	25

(1) Intermittierender Betrieb max. 6 Sekunden / Minute
(2) Spitzenbetrieb max. 0.6 Sekunden / Minute

(1) Intermittend operation rating applies to 6 sec. of every minute
(2) Peak load rating applies to 0.6 sec of every minute

50% OFF ALL PRICES

Leistungsdaten

FFPMT160 (161.1 cm³/U)

Druck / *pressure* (bar)

Durchflussmenge / *Oil flow* (l/min)	40	80	100	120	160	200 (Max. cont.)	240 (Max. Int.)	
10	8.8	17.6	22.8	27.5	36.1	44.7	53.5	daNm
	60	**59**	**58**	**56**	**54**	**50**	**44**	RPM
20	8.9	18.1	23.4	27.7	37.2	45.9	55.7	
	121	**120**	**117**	**114**	**109**	**103**	**95**	
40	9.1	18.0	23.5	27.7	38.1	47.1	57.3	
	249	**246**	**243**	**236**	**230**	**223**	**212**	
60	8.2	17.8	23.5	27.7	38.1	47.1	57.3	
	371	**367**	**362**	**356**	**349**	**340**	**330**	
80	7.8	17.3	22.9	27.6	37.9	46.6	56.7	
	492	**489**	**485**	**478**	**470**	**462**	**447**	
100 (Max. cont.)	7.0	16.0	21.8	26.9	37.0	45.5	55.8	
	614	**611**	**606**	**598**	**590**	**582**	**570**	
125 (Max. int.)	5.8	14.8	21.1	26.1	35.9	44.8	55.2	
	770	**764**	**758**	**750**	**741**	**731**	**715**	

Performance data

FFPMT 200 (201.4 cm³/U)

Druck / *pressure* (bar)

Durchflussmenge / *Oil flow* (l/min)	40	80	100	120	160	200 (Max. cont.)	240 (Max. Int.)	
10	12.4	23.3	28.9	34.0	45.4	56.0	66.9	daNm
	47	**46**	**45**	**42**	**39**	**37**	**33**	RPM
20	12.5	23.9	29.8	34.7	46.8	57.6	69.6	
	95	**94**	**92**	**90**	**87**	**84**	**75**	
40	12.0	24.1	29.6	35.2	47.5	58.9	71.6	
	195	**193**	**191**	**187**	**183**	**178**	**167**	
60	11.6	23.7	29.5	35.2	47.8	58.9	71.8	
	297	**295**	**292**	**287**	**282**	**276**	**263**	
80	10.8	23.1	28.9	35.0	47.4	58.6	71.6	
	395	**393**	**389**	**384**	**377**	**370**	**359**	
100	9.9	22.7	28.6	34.4	47.1	58.0	71.2	
	493	**490**	**486**	**482**	**475**	**467**	**460**	
125 (Max. cont.)	8.4	20.8	27.6	33.3	45.9	56.6	69.7	
	615	**611**	**607**	**602**	**595**	**588**	**572**	
150 (Max. int.)	7.0	19.4	26.0	32.4	44.7	55.4	68.2	
	743	**740**	**735**	**727**	**717**	**706**	**682**	

FFPMT 250 (251.8 cm³/U)

Druck / *pressure* (bar)

Durchflussmenge / *Oil flow* (l/min)	40	80	100	120	160	200 (Max. cont.)	240 (Max. Int.)	
10	13.8	28.6	35.5	41.9	55.9	68.9	82.4	daNm
	38	**38**	**37**	**36**	**34**	**32**	**31**	RPM
20	14.3	29.6	36.4	43.2	58.0	70.8	85.3	
	76	**75**	**74**	**72**	**70**	**67**	**62**	
40	13.9	30.1	37.2	44.0	59.3	72.3	88.4	
	156	**154**	**152**	**149**	**146**	**142**	**134**	
60	13.2	29.4	37.2	44.1	59.2	72.7	88.8	
	237	**236**	**233**	**229**	**224**	**219**	**207**	
80	12.8	28.3	36.4	43.3	58.7	72.1	88.7	
	317	**316**	**314**	**308**	**303**	**299**	**284**	
100	12.6	28.2	35.5	42.7	58.2	71.6	87.9	
	396	**394**	**391**	**387**	**381**	**373**	**359**	
125 (Max. cont.)	11.6	26.0	34.0	41.4	56.8	70.3	86.4	
	495	**492**	**488**	**483**	**476**	**469**	**454**	
150 (Max. int.)	8.8	24.2	32.0	39.7	55.2	68.6	84.7	
	592	**589**	**585**	**580**	**572**	**565**	**545**	

FFPMT 315 (326.3 cm³/U)

Druck / *pressure* (bar)

Durchflussmenge / *Oil flow* (l/min)	40	80	100	120	160	200 (Max. cont.)	240 (Max. Int.)	
10	18.4	36.3	45.3	54.5	73.4	89.1	106.2	daNm
	30	**29**	**28**	**27**	**26**	**25**	**23**	RPM
20	18.9	38.0	47.2	56.2	75.7	91.7	110.9	
	60	**59**	**58**	**56**	**54**	**52**	**50**	
40	19.1	38.1	48.4	57.0	77.4	95.4	114.9	
	121	**120**	**118**	**115**	**112**	**109**	**104**	
60	18.9	37.6	49.3	57.3	77.2	96.2	115.4	
	183	**181**	**179**	**175**	**172**	**168**	**158**	
80	17.9	36.9	47.9	56.5	76.8	95.4	115.3	
	244	**242**	**239**	**236**	**231**	**227**	**217**	
100	16.9	35.7	46.7	56.2	75.8	94.2	114.3	
	305	**304**	**301**	**298**	**294**	**289**	**276**	
125 (Max. cont.)	14.7	33.6	44.7	54.4	74.5	92.0	112.7	
	380	**378**	**375**	**371**	**367**	**362**	**349**	
150 (Max. int.)	11.9	31.8	43.2	52.6	71.3	89.4	109.7	
	458	**456**	**453**	**449**	**444**	**431**	**425**	

Leistungsdaten

Performance data

FFPMT 400 (410.9 cm^3/U)

Druck / *pressure* (bar)

Durchflussmenge / *Oil flow* (l/min)	30	60	90	105	120	140 (Max. cont.)	160 (Max. Int.)	
10	17.6	36.7	56.0	71.5	88.5	105.0	120.9	daNm
	24	**23**	**22**	**21**	**20**	**19**	**18**	RPM
20	17.9	37.0	56.5	72.6	89.9	107.1	123.6	
	49	**48**	**47**	**44**	**42**	**40**	**38**	
40	17.6	37.0	56.7	73.3	91.9	109.1	126.3	
	96	**95**	**93**	**90**	**87**	**83**	**79**	
60	17.4	36.1	56.3	72.9	92.0	109.5	126.9	
	145	**143**	**139**	**135**	**131**	**127**	**121**	
80	16.6	35.3	55.3	71.9	91.2	108.4	126.3	
	193	**191**	**188**	**184**	**180**	**176**	**170**	
100	15.0	33.9	53.8	70.8	89.6	106.7	125.2	
	242	**240**	**238**	**234**	**228**	**224**	**218**	
125 (Max. cont.)	13.5	30.9	52.4	68.8	87.3	104.5	122.1	
	302	**300**	**298**	**294**	**289**	**285**	**278**	
150 (Max. int.)	12.6	29.2	50.8	66.6	85.2	102.0	119.7	
	364	**362**	**358**	**354**	**350**	**346**	**339**	

FFPMT 500 (523.6 cm^3/U)

Druck / *pressure* (bar)

Durchflussmenge / *Oil flow* (l/min)	30	60	90	120	140	160 (Max. cont.)	180 (Max. Int.)	
10	22,2	45,1	69,2	89,2	105,0	119,3	134,0	daNm
	18	**18**	**18**	**17**	**16**	**15**	**13**	RPM
20	23,1	46,4	71,4	91,8	107,0	122,0	137,7	
	37	**36**	**35**	**34**	**33**	**32**	**30**	
40	23,0	46,6	72,7	94,1	109,4	124,4	142,2	
	75	**74**	**73**	**72**	**70**	**68**	**64**	
60	22,5	45,7	71,4	94,1	108,8	124,5	140,9	
	113	**112**	**111**	**109**	**107**	**105**	**101**	
80	21,3	43,1	69,6	92,7	107,6	124,4	140,1	
	151	**150**	**149**	**147**	**145**	**143**	**138**	
100	19,4	42,0	68,0	90,1	106,3	122,4	138,3	
	189	188	187	185	183	181	177	
125 (Max. cont.)	18,2	39,8	64,1	87,7	102,4	119,9	135,2	
	237	**236**	**235**	**233**	**231**	**229**	**225**	
150 (Max. int.)	14,7	36,9	61,8	85,3	100,4	116,7	132,5	
	284	**283**	**282**	**280**	**278**	**276**	**272**	

FFPMT 630 (629.1 cm^3/U)

Druck / *pressure* (bar)

Durchflussmenge / *Oil flow* (l/min)	30	60	90	105	120	140 (Max. cont.)	160 (Max. Int.)	
10	23.3	52.0	79.5	90.2	107.4	119.4	136.3	daNm
	14	**14**	**13**	**13**	**13**	**11**	**11**	RPM
20	23.7	55.4	83.7	95.3	111.7	123.9	140.7	
	28	**27**	**27**	**26**	**26**	**24**	**22**	
40	23.9	55.3	86.0	98.7	117.1	130.8	148.3	
	62	**62**	**61**	**60**	**59**	**56**	**54**	
60	22.3	54.4	86.3	97.8	117.2	131.8	149.8	
	94	**94**	**92**	**91**	**90**	**86**	**82**	
80	22.0	53.7	85.4	96.5	117.2	131.4	149.7	
	123	**122**	**121**	**119**	**118**	**114**	**110**	
100	20.8	52.2	83.2	94.5	115.6	130.3	148.8	
	156	**155**	**153**	**152**	**150**	**147**	**142**	
125 (Max. cont.)	20.1	49.9	81.0	93.1	113.7	129.2	147.2	
	196	**196**	**194**	**192**	**191**	**187**	**183**	
150 (Max. int.)	17.4	49.2	78.5	92.1	112.1	127.7	145.4	
	233	**232**	**231**	**230**	**227**	**223**	**217**	

FFPMT 800 (801.8 cm^3/U)

Druck / *pressure* (bar)

Durchflussmenge / *Oil flow* (l/min)	30	60	90	105	125 (Max. cont.)	130 (Max. Int.)	
10	34.6	67.7	100.3	115.9	136.5	139.0	daNm
	12	**12**	**11**	**11**	**11**	**10**	RPM
20	35.6	69.2	103.4	118.3	140.4	145.8	
	24	**24**	**24**	**23**	**22**	**18**	
40	36.5	70.3	106.6	123.6	145.9	151.6	
	50	**50**	**49**	**48**	**46**	**40**	
60	35.4	70.3	106.0	123.7	146.4	152.0	
	74	**73**	**71**	**71**	**68**	**63**	
80	33.2	68.6	105.0	122.6	146.4	151.4	
	99	**98**	**98**	**96**	**93**	**86**	
100	30.5	65.4	102.5	120.7	144.5	150.6	
	125	**123**	**123**	**121**	**118**	**110**	
125 (Max. cont.)	28.0	62.2	98.9	118.1	142.2	148.7	
	154	**153**	**153**	**150**	**149**	**140**	
150 (Max. int.)	24.7	59.0	95.3	115.6	140.6	147.6	
	185	**184**	**183**	**181**	**179**	**172**	

50% OFF ALL PRICES

Abmessungen

Dimensions

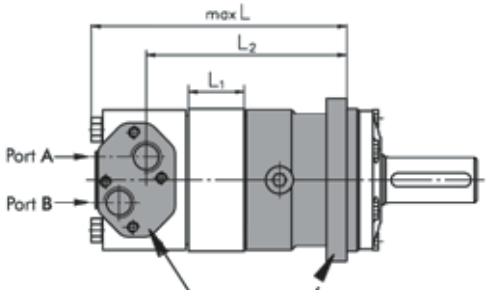

Anschlüsse / *Porting*

Seitenanschluss / ***Side Ports***

Version G M

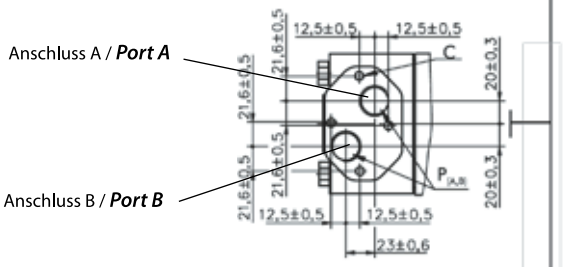

Version U

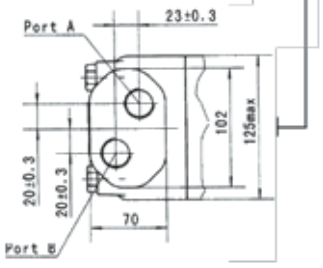

Quadratflansch 4-loch / ***Square flange 4 holes***

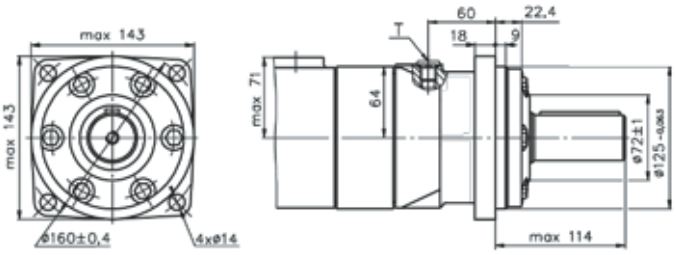

C SAE C Flansch (4-loch) / ***SAE C Mount (4 holes)***

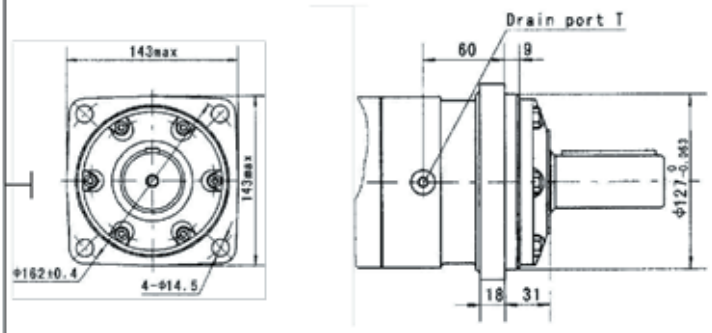

An-schluss / *Port*	Versionen / *Versions*		
	Leer (Tief)/ *Omit (depth)*	M (Tief / *depth*)	U (Tief / *depth*)
P(A,B)	2 x G ¾" (18)	2 x M27 x 2 18	2 x 1 1/16"-12UN (18)
T	G ¼" (12)	M14 x 1,5 (12)	9/16-18 UNF (12)
C	4 x M10 (10)	4 x M10 (10)	-

W Radflansch / ***Wheelflange***

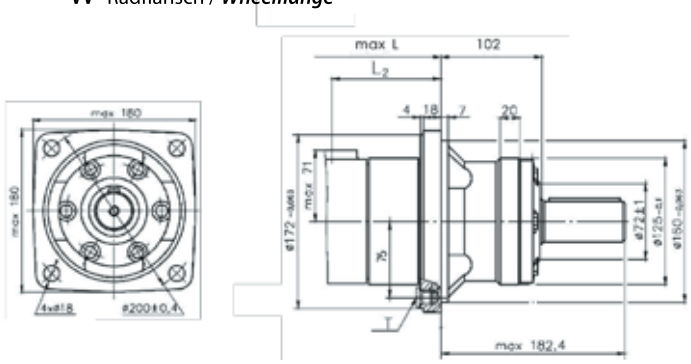

Typ / *Type*	L	L_2	Typ / *Type*	L	L_2	L_1
FFPMT 160	193	142.5	FFPMTW 160	127	77	17
FFPMT 200	197	146.5	FFPMTW 200	131	81	21
FFPMT 250	204	152.5	FFPMTW 250	136	86	14
FFPMT 315	210	158.5	FFPMTW 315	142	91	20
FFPMT 400	217	165.5	FFPMTW 400	148	98	27
FFPMT 500	225	173.5	FFPMTW 500	157	106	35
FFPMT 630	237	185.5	FFPMTW 630	169	118	47
FFPMT 800	248	196.5	FFPMTW 800	180	129	58

Wichtig:
Bitte beachten Sie, dass Motoren der Baugröße FFPMT160 und FFPMT200 nicht mit den anderen Baugrößen (FFPMT250-800) umbaubar sind, da Unterschiede im internen Aufbau der Motoren vorhanden sind.

Important:
Please note that motors with size FFPMT160 and FFPMT200 are not modifyable with other motor sizes (FFPMT250-800), because some internal parts are different.

Abmessungen

Anschlüsse / *Porting*

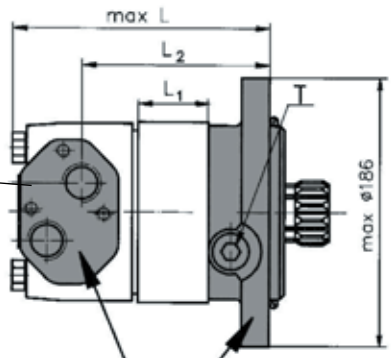

Anschluss A / ***Port A***

Anschluss B / ***Port B***

Seitenanschluss / ***Side Ports***

Version G M U

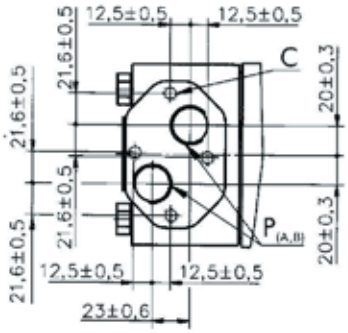

An-schluss / *Port*	Versionen / *Versions*		
	Leer (Tief)/ *Omit (depth)*	M (Tief / *depth*)	U (Tief / *depth*)
P(A,B)	2 x G ¾" (18)	2 x M27 x 2 (18)	2 x 1 1/16"-12UN (18)
T	G ¼" (12)	M14 x 1,5 (12)	9/16-18 UNF (12)
C	4 x M10 (10)	4 x M10 (10)	-

Technik / *Technical*

Der Kurzmotor FFPMTS hat keine Abtriebswelle bzw. Lagerung und ist zur direkten Montage an ein Getriebe bzw. an eine Bremse konzipiert worden.
Die Kardanwelle führt eine taumelnde Bewegung durch, daher ist die Montage eines Wellendichtringes nicht möglich. Das Getriebe muss eine entsprechende Abdichtung besitzen. Außerdem muss es so konstruiert werden, dass das Leckö des Motors die Schmierung der Kardanwelle übernimmt. / ***The short motor FFPMTS has no output shafts or bearings and is designed for a direct mounting into a gearbox or brake.***
The cardan shaft of the motor describes a tumbling motion. For this reason the motor itself can't be fitted with a shaft seal. The gear box must be fitted with a sealing. It is also necessary that the leakage of the motor lubricates the cardan shaft.

Verzahnungsgeometrie / *Fillet Root Side Fit*		mm
Zähnezahl / *Number of Teeth*	z	16
Steigung / *Diametral Pitch*	DP	12/24
Anpresswinkel / *Pressure Angle*	α_D	30°
Nenndurchmesser / *Pitch Dia.*	D	33.8656
Hauptdurchmesser / *Major Dia.*	D_{ri}	$38.40^{+0.4}$
Zahngrund / *Minor Dia.*	D_i	$32.15^{+0.04}$
Abstand Zahngrund / *Space Width (Circular)*	L_0	4.516±0.021

Dimensions

Typ / *Type*	L	L_2	L_1
FFPMTS 160	148	96.5	17
FFPMTS 200	152	100.5	21
FFPMTS 250	157	109	14
FFPMTS 315	163	115	20
FFPMTS 400	170	122	27
FFPMTS 500	178	130	35
FFPMTS 630	190	142	47
FFPMTS 800	201	153	58

S Kurzversion / ***Short Mount***

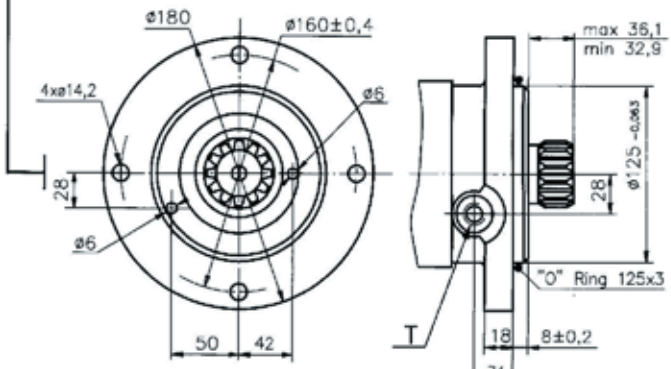

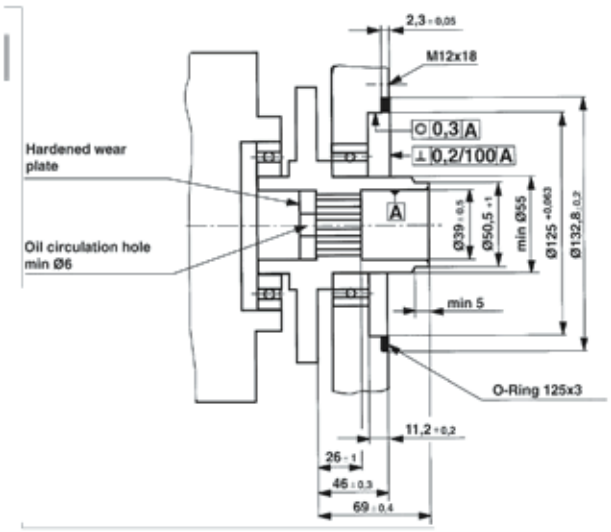

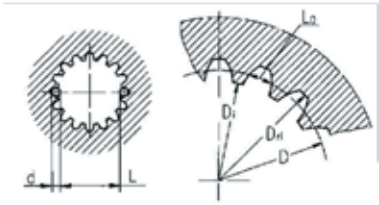

Härtespezifikation / ***Hardening Specification:***
HRC 62±2
Effektive Härtetiefe / ***Effective case depth (HRC 52):***
0,7±0,2mm

50% OFF ALL PRICES

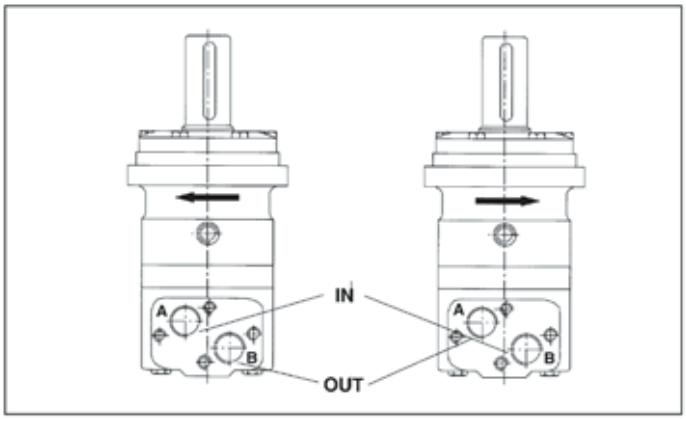

Max. Rücklaufdruck ohne Leckölleitung bzw. max. Druck in der Leckölleitung / ***Max. return pressure without drain line or max. pressure in drain line***

Drehzahl/ *RPM*	Dauerdruck / *cont. Pressure* (bar)
0-100	75
100-300	40
300-810	20

Max. Rücklaufdruck mit Leckölleitung / ***Max. return pressure with drain line***

Dauerbetrieb / *Continuous*	140 bar
Kurzzeitig / *Intermittent*	175 bar

Drehrichtungsauswahl *Rotation selection*

Unser Motor FFPMT besitzt integrierte Rückschlagventile, dadurch wird der Druck auf den Wellendichtring nie größer als der Rücklaufdruck. Beim Short-Motor FFPMTS ist der Druck durch die technischen Daten des Anbaugetriebes begrenzt. / ***The FFPMT motor has built-in check valves. For this reason, he pressure on the shaft seal is never greater than back flow pressure. In the short motor FFPMTS pressure is determined based on the technical data of the attached gear box.***

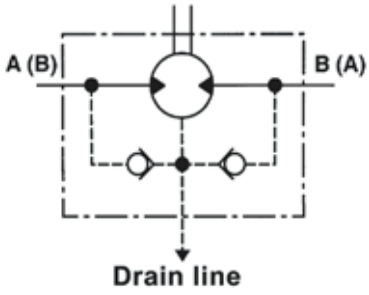

Wellenbelastung *Shaft Load*

Durch die integrierten Schrägrollenlager sind die Motoren vom Typ FFPMT in der Lage hohe Axial- und Radialkräfte aufzunehmen. Die gestrichelte Linie im seitlichen Diagramm zeigt die maximal zulässige Radialkraft. Belastungen oberhalb dieser Grenze können zum Bruch der Welle führen. Die durchgezogenen Linien zeigen die zulässigen Radialbelastungen bei einer Lebensdauer von 3000h bei 200 U/min.

The tapered roller bearings on the output shaft can accept high levels of axial and radial load for FFPMT motors. The broken curve shows the maximum permissible radial load. Loads above and beyond this level can lead to breakage. The solid curve plots the permissable radial loads for a theoretical service life of 3000 hours at 200 RPM.

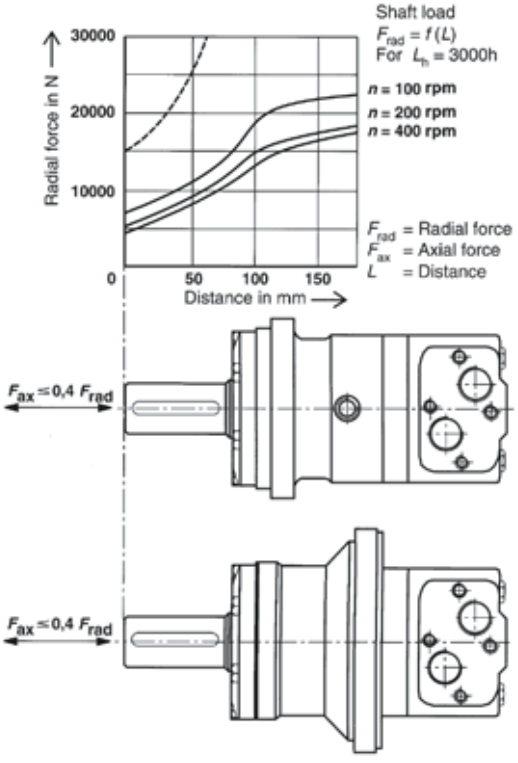

Abtriebswellen

C - Ø 40 mm zylindrisch mit Passfeder A12 x 8 x 70 (DIN 6885) Max. Drehmoment: 132.8 daNm / ***Ø 40mm straight, parallel key A12 x 8x 70 (DIN 6885). Max. torque: 132.8 daNm***

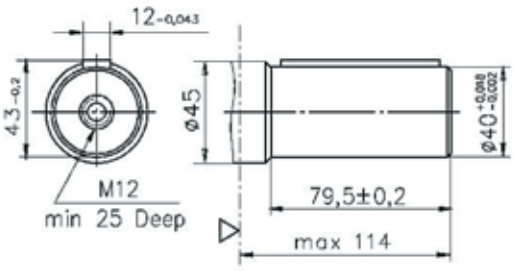

CO - Ø 38.1 mm (1 ½") zylindrisch mit Passfeder ⅜" x ⅜" x 2¼" BS46. Max. Drehmoment: 132.8 daNm / ***Ø 38.1 mm (1 ½") straight, parallel key ⅜" x ⅜" x 2¼" BS46. Max. torque: 132.8 daNm***

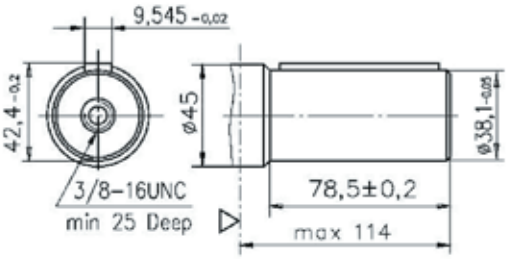

SL - Ø 34,85, P.T.O DIN 9611 Form 1. Max. Drehmoment: 77 daNm / ***Ø 34,85, P.T.O DIN 9611 Form 1. Max. torque: 77 daNm***

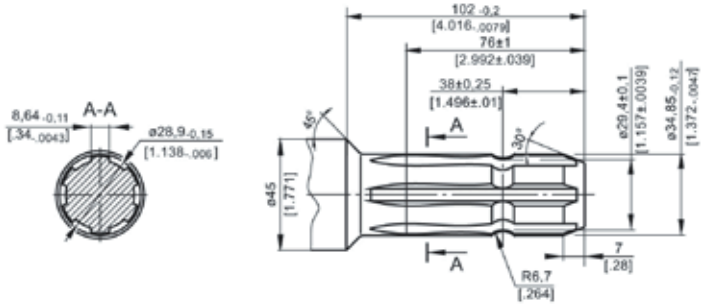

Output shafts

K - Kon. 1:10 mit Passfeder B12 x 8 x 28 DIN 6885. Max. Drehmoment: 210.7 daNm / ***conical 1:10, parallel key B12 x 8 x 28 DIN 6885. Max. torque: 210.7 daNm***

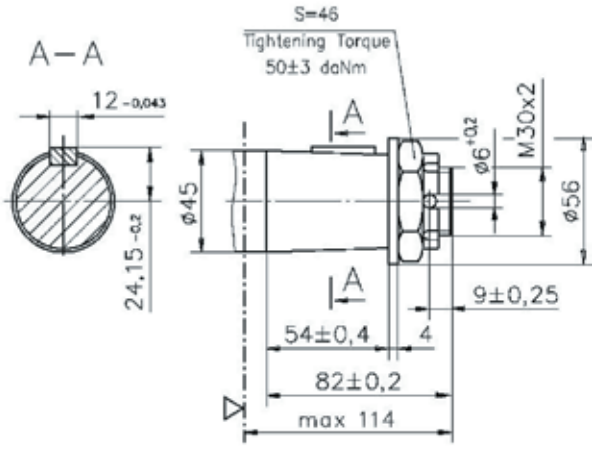

SH - Ø 1½" verzahnt, 17 Zähne, DP 12/24, ANSI B92.1-1976. Max. Drehmoment: 132.8 daNm / ***Ø 1½" splined, 17T, DP 12/24, ANSI B92.1-1976. Max. torque: 132.8 daNm***

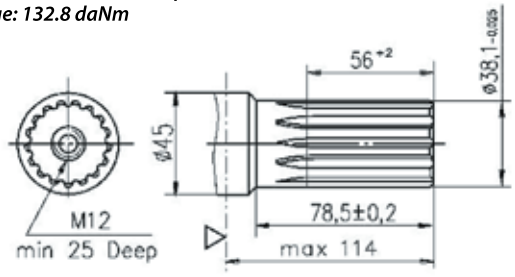

50% OFF ALL PRICES

HYDRAULIC MOTOR SERIES FFPMT

Bestellinformationen

	1	2	3	4	5	6	7
FFPMT							

Pos. 1	Montageflansch / *Mounting flange*
Leer / *Omit*	Quadratflansch 4-loch / *Square flange 4-holes*
C	SAE C Flansch 4-loch / *SAE C mount 4 holes*
W	Radflansch / *Wheel mount*
S	Kurzversion / *Short mount*

Pos. 2	Schluckvolumen / *Displacement*
160	160 cm^3/U / *160 ccm/REV*
200	200 cm^3/U / *200 ccm/REV*
250	250 cm^3/U / *250 ccm/REV*
315	315 cm^3/U / *315 ccm/REV*
400	400 cm^3/U / *400 ccm/REV*
500	500 cm^3/U / *500 ccm/REV*
630	630 cm^3/U / *630 ccm/REV*
800	800 cm^3/U / *800 ccm/REV*

Pos. 3	Wellenausführungen / *Shaft extensions*
C	Ø 40 mm zylindrisch mit Passfeder A12 x 8 x 70 *Ø 40 mm straight, parallel key A10 x 8x 45.*
CO	Ø 38.1 mm (1 ½") zylindrisch mit Passfeder ⅜" x ⅜" x 2¼" / *Ø 38,1 mm (1 ½") straight, parallel key ⅜" x ⅜" x 2¼"*
SL	Ø 34,85 mm P.T.O. DIN 9611 Form 1 / *Ø 34,85 mm P.T.O. DIN 9611 Form 1*

Order Information

K	Konisch 1:10 mit Passfeder B12 x 8 x 28 / *Conical 1:10 with key B12 x 8 x 28*
SH	Ø 1 ½" verzahnt, 17 Zähne, DP 12/24 / *Ø 1 ½" splined, 17T, DP 12/24.*

Pos. 5	Anschlüsse / *Porting*
Leer / *Omit*	G ¾" / *G ¾"*
M	Metrisch 2 x M27 x 2 / *Metric 2 x M27 x 2*
U	2 x 1 1/16"-12 UN, T: 9/16 - 18 UNF / *2 x 1 1/16"-12 UN, T: 9/16 - 18 UNF*

Pos. 6	Farbe / *Painting*
Leer / *Omit*	Grau / *Grey*
RAL...	+ Ralfarbe (z.B. 7021) / *+ Ral colour (e.g. 7021)l*

Pos. 7	Drehrichtung / *Rotation direction*
Leer / *Omit*	Standarddrehrichtung / *Standard Rotation*
R	Umgekehrte Drehrichtung / *Reverse Rotation*

HYDRAULIC MOTOR PRICE LIST - BUILD YOUR OWN

FFPMT HYDRAULIC MOTOR

STANDARD OPTIONS INCLUDED FFPMT	PART NUMBER	PRICE
SIDE PORTS: 2 X G 3/4" (BSP)	FFPMT 160	£463.45
SHAFT TYPE Ø 40 C	FFPMT 200	£464.74
SHAFT TYPE Ø 40 C	FFPMT 250	£472.48
	FFPMT 315	£478.19
Q.-FLANGE T YPE 143, 4 X Ø 14 ON DIA 160	FFPMT 400	£496.72
	FFPMT 500	£533.77
	FFPMT 630	£547.87
	FFPMT 800	£562.22
OPTIONAL EXTRAS FFPMT		
SPLINED Ø 38,1 12/24 D.PITCH, 30°, Z/T = 17	SH: ADD	£5.33
SHAFT TAPERED 1:10, B12X8X28	K: ADD	£9.68
	SL: ADD	£11.38
FLANGE OPTION EXTRAS FFPMT:		
WHEEL FLANGE	W: ADD	£25.63
SHORT VERSION "S"	S: MINUS	£27.76
ULTRA SHORT VERSION "Z"	Z: MINUS	£27.76
SEAL KIT FFPMT	SEAL KIT FFPMT	£26.70

FLOWFIT HYDRAULIC MOTOR PRICE LIST - COMPLETE

PART NUMBER	DESCRIPTION	PRICE
FFPMT160C	HYDRAULIC MOTOR FFPMT160C, 160 CCM/REV, SHAFT 40MM, 4-HOLE FLANGE	£463.44
FFPMT160SH	HYDRAULIC MOTOR FFPMT160SH, 160 CCM/REV, SPLINED SHAFT 1 1/2", 4-HOLE FLANGE	£469.74
FFPMT160SL	HYDRAULIC MOTOR FFPMT160SL, 160,0 CM3/U, 6-34,85MM P.T.O. SPLINED, 4-HOLE FLANGE	£474.82
FFPMT200C	HYDRAULIC MOTOR FFPMT200C,200 CCM/REV, SHAFT 40MM, 4-HOLE FLANGE	£464.74
FFPMT200K	HYDRAULIC MOTOR FFPMT200K,200 CCM/REV,TAPERED SHAFT 1:10, 4-HOLE FLANGE	£474.39
FFPMT200SH	HYDRAULIC MOTOR FFPMT200SH, 200,0 CCM/REV, SPLINED SHAFT 1 1/2", 4-HOLE FLANGE	£470.08
FFPMT200SL	HYDRAULIC MOTOR FFPMT200SL, 200 CCM/REV, PTO SHAFT, 4-HOLE FLANGE	£476.11
FFPMT250C	HYDRAULIC MOTOR FFPMT250C,250 CCM/REV, SHAFT 40MM, 4-HOLE FLANGE	£472.48
FFPMT250SH	HYDRAULIC MOTOR FFPMT250SH, 250,4 CCM/REV, SPLINED SHAFT 1 1/2", 4-HOLE FLANGE	£477.83
FFPMT250SL	HYDRAULIC MOTOR FFPMT250SL, 250,4 CCM/REV, PTO SHAFT, 4-HOLE FLANGE	£483.86
FFPMT315C	HYDRAULIC MOTOR FFPMT315C, 319,5 CCM/REV, SHAFT 40MM, 4-HOLE FLANGE	£478.19
FFPMT315SH	HYDRAULIC MOTOR FFPMT315SH, 319,5 CCM/REV, SPLINED SHAFT 1 1/2", 4-HOLE FLANGE	£483.53
FFPMT315SL	HYDRAULIC MOTOR FFPMT315SL, 319,5 CCM/REV, PTO SHAFT, 4-HOLE FLANGE	£489.56
FFPMT400C	HYDRAULIC MOTOR FFPMT400C, 401,8 CCM/REV, SHAFT 40MM, 4-HOLE FLANGE	£496.73
FFPMT400K	HYDRAULIC MOTOR FFPMT400K, 401,8 CCM/REV,TAPERED SHAFT 1:10, 4-HOLE FLANGE	£506.39
FFPMT400SH	HYDRAULIC MOTOR FFPMT400SH, 410,9 CCM/REV, SPLINED SHAFT 1 1/2", 4-HOLE FLANGE	£502.08
FFPMT500C	HYDRAULIC MOTOR FFPMT500C, 523,5 CCM/REV, SHAFT 40MM, 4-HOLE FLANGE	£533.77
FFPMT500K	HYDRAULIC MOTOR FFPMT500K, 523,5 CCM/REV,TAP. SHAFT 1:10, 4-HOLE FLANGE	£543.53
FFPMT500SH	HYDRAULIC MOTOR FFPMT500SH, 523,5 CCM/REV, SPLINED SHAFT 1 1/2", 4-HOLE FLANGE	£539.14
FFPMT800C	HYDRAULIC MOTOR FFPMT800C, 801 CCM/REV, SHAFT 40MM, 4-HOLE FLANGE	£562.21
FFPMTC400C	HYDRAULIC MOTOR FFPMT400C, 401,8 CCM/REV, WELLE 40MM, 4-HOLE SAE-C FLANGE	£496.73
FFPMTC400SH	HYDRAULIC MOTOR FFPMT400SH, 401,8 CCM/REV, SPLINED SHAFT 1 1/2", 4-HOLE SAE-C FLANGE	£502.08
FFPMTS160	HYDRAULIC MOTOR SHORT FFPMTS160, 160,0 CM3/U	£435.66
FFPMTS200	HYDRAULIC MOTOR SHORT FFPMTS200, 200,0 CM3/U	£436.96
FFPMTS250	HYDRAULIC MOTOR SHORT FFPMTS250, 250,4 CM3/U	£635.04
FFPMTS315	HYDRAULIC MOTOR SHORT FFPMTS315, 319,5 CM3/U	£450.43
FFPMTS400	HYDRAULIC MOTOR SHORT FFPMTS400, 401,8 CM3/U	£468.95
FFPMTS500	HYDRAULIC MOTOR SHORT FFPMTS500, 523,5 CM3/U	£506.04
FFPMTW160C	HYDRAULIC MOTOR FFPMTW160C, 160,0 CCM/REV, 40MM SHAFT, WHEELFLANGE	£489.07
FFPMTW160K	HYDRAULIC MOTOR FFPMTW160K, 160,0 CCM/REV, CONICAL SHAFT 1:10, WHEELFLANGE	£498.74
FFPMTW200C	HYDRAULIC MOTOR FFPMTW200C, 200,0 CCM/REV, 40MM SHAFT CYL., WHEELFLANGE	£490.37
FFPMTW200K	HYDRAULIC MOTOR FFPMTW200K, 200,0 CCM/REV, CONICAL SHAFT 1:10, WHEELFLANGE	£500.03
FFPMTW200SH	HYDRAULIC MOTOR FFPMTW200SH, 200,0 CCM/REV, SPLINED SHAFT 1 1/2", WHEELFLANGE	£495.71
FFPMTW250C	HYDRAULIC MOTOR FFPMTW250C,250 CCM/REV, SHAFT 40MM, WHEELFLANGE	£498.12
FFPMTW250K	HYDRAULIC MOTOR FFPMTW250K, 250,4 CCM/REV, CONICAL SHAFT 1:10, WHEELFLANGE	£507.78
FFPMTW250SH	HYDRAULIC MOTOR FFPMTW250SH,250 CCM/REV,SPLINED SHAFT, WHEELFLANGE	£503.46
FFPMTW315C	HYDRAULIC MOTOR FFPMTW315C, 319,5 CCM/REV, 40MM SHAFT, WHEELFLANGE	£503.83
FFPMTW315K	HYDRAULIC MOTOR FFPMTW315K, 319,5 CCM/REV, CONICAL SHAFT 1:10, WHEELFLANGE	£513.49
FFPMTW400C	HYDRAULIC MOTOR FFPMTW400C, 401,8 CCM/REV, CYL. SHAFT 40MM, WHEELFLANGE	£522.38
FFPMTW400K	HYDRAULIC MOTOR FFPMTW400K, 401,8 CCM/REV, CONICAL SHAFT 1:10, WHEELFLANGE	£532.04
FFPMTW500C	HYDRAULIC MOTOR FFPMTW500C, 523,5 CCM/REV, 40MM SHAFT, WHEELFLANGE	£559.42
FFPMTW500K	HYDRAULIC MOTOR FFPMTW500K, 523,5 CCM/REV, CONICAL SHAFT 1:10, WHEELFLANGE	£569.08
FFPMTW800C	HYDRAULIC MOTOR FFPMTW800C, 801 CCM/REV, 40MM SHAFT, WHEELFLANGE	£585.95
FFPMTW800K	HYDRAULIC MOTOR FFPMTW800K, 801 CCM/REV, CONICAL SHAFT 1:10, WHEELFLANGE	£595.61

50% OFF ALL PRICES

FFPMV Hydraulik Motor

- Modell Verteilerventil mit Geroller
- Geringes Startmoment und hoher Wirkungsgrad
- Internes Rückschlagventil
- Verwendung ohne Leckölanschluss möglich
- Schrägrollenlager für hohe Radialbelastung
- Hohes Drehmoment für anspruchsvolle Anwendungen

FFPMV Hydraulic Motor

- *Disk valve type with geroler*
- *Low starting torque and high efficiency*
- *Internal check valve*
- *Usage without drain line possible*
- *Tapered roller bearing for high radial load*
- *High torque for ambitious applications*

TYP / *Type*		FFPMV 315	FFPMV 400	FFPMV 500	FFPMV 630	FFPMV 800	FFPMV 1000
Schluckvolumen / *Displacement* [cm^3/REV]		333	419	518	666	801	990
Max. Drehzahl / *Max. Speed* [RPM]	Dauerbetrieb / *Cont.*	510	500	400	320	250	200
	Int.(1)	630	600	480	380	300	240
Max. Drehmoment / *Max. Torque* [daNm]	Dauerbetrieb / *Cont.*	920	1180	1460	1660	1880	2015
	Int.(1)	1110	1410	1760	1940	2110	2280
	Spitze / *Peak* (2)	1290	1640	2050	2210	2470	2400
Max. Leistungsabgabe / *Max. Output Power* [kW]	Dauerbetrieb / *Cont.*	38.0	47.0	47.0	40.0	33.0	28. Jun
	Int.(1)	46.0	56.0	56.0	56.0	44.0	40.0
Max. Druckgefälle / *Max. Pressure Drop* [bar]	Dauerbetrieb / *Cont.*	200	200	200	180	160	140
	Int.(1)	240	240	240	210	180	160
	Spitze / *Peak* (2)	280	280	280	240	210	180
Max. Ölstrom / *Max. Oil flow* [l/min]	Dauerbetrieb / *Cont*	160	200	200	200	200	200
	Int.(1)	200	240	240	240	240	240
Max. Eingangsdruck / *Max. Input Pressure* [bar]	Dauerbetrieb / *Cont.*	210	210	210	210	210	210
	Int.(1)	250	250	250	250	250	250
	Spitze / *Peak* (2)	300	300	300	300	300	300
Gewicht / *Weight* [kg]		31.8	32.6	33.5	34.9	36.5	38.6

(1) Intermittierender Betrieb max. 6 Sekunden / Minute
(2) Spitzenbetrieb max. 0.6 Sekunden / Minute

(1) Intermittend operation rating applies to 6 sec. of every minute
(2) Peak load rating applies to 0.6 sec of every minute

Leistungsdaten

FFPMV315 (333 cm³/U)

Druck / *pressure* (bar)

Durchflussmenge / ***Oil flow*** (l/min)

	35	70	100	140	180	200 (Max. cont.)	240 (Max. Int.)	
10	14.0	29.4	44.0	61.0	74.2	84.5	100.0	daNm
	26	**24**	**23**	**22**	**20**	**17**	**14**	RPM
20	15.3	31.4	46.6	63.6	78.7	89.5	107.0	
	55	**54**	**53**	**52**	**51**	**48**	**44**	
50	14.9	31.2	46.5	65.4	81.5	93.5	111.2	
	145	**144**	**142**	**140**	**137**	**133**	**127**	
75	14.3	30.4	45.8	64.2	81.6	94.0	111.9	
	220	**218**	**215**	**211**	**207**	**202**	**195**	
100	13.6	29.7	45.2	63.6	81.0	93.6	110.8	
	294	**292**	**290**	**287**	**283**	**278**	**270**	
125	12.3	28.6	44.2	62.6	79.9	92.1	109.3	
	368	**366**	**364**	**361**	**357**	**352**	**345**	
150 (Max. cont.)	11.4	27.5	43.5	61.5	78.8	90.6	107.8	
	445	**443**	**441**	**437**	**430**	**422**	**410**	
160	10.7	26.8	43.0	60.8	78.0	89.5	107.0	
	475	**473**	**470**	**466**	**460**	**452**	**439**	
200 (Max. int.)	8.2	24.9	41.2	59.3	75.8	87.1	104.7	
	596	**594**	**590**	**584**	**576**	**565**	**544**	

Performance data

FFPMV400 (419 cm³/U)

Druck / *pressure* (bar)

Durchflussmenge / ***Oil flow*** (l/min)

	35	70	100	140	180	200 (Max. cont.)	240 (Max. Int.)	
10	18.3	38.5	56.8	77.6	96.8	110.1	129.2	daNm
	20	**20**	**19**	**18**	**17**	**16**	**14**	RPM
20	19.6	39.8	59.0	81.5	101.0	115.2	134.6	
	44	**44**	**43**	**42**	**40**	**39**	**37**	
50	20.0	40.2	60.3	84.2	104.0	118.6	143.0	
	114	**113**	**113**	**112**	**110**	**108**	**103**	
75	19.5	39.4	59.6	83.8	104.3	118.8	143.2	
	175	**173**	**170**	**166**	**163**	**1579**	**152**	
100	17.2	38.5	59.3	82.7	103.6	118.4	142.5	
	236	**235**	**233**	**231**	**227**	**223**	**215**	
125	16.7	37.4	58.3	81.6	102.1	117.7	141.3	
	296	**294**	**291**	**288**	**282**	**275**	**268**	
150	15.8	36.1	55.9	80.1	100.8	116.5	139.0	
	355	**354**	**352**	**349**	**344**	**335**	**324**	
175	14.3	34.6	55.3	78.4	98.9	114.5	137.7	
	416	**414**	**411**	**407**	**403**	**396**	**388**	
200 (Max. cont.)	11.8	33.1	53.6	77.0	96.9	112.8	135.6	
	475	**473**	**469**	**463**	**455**	**448**	**439**	
240 (Max. int.)	8.2	30.1	50.6	74.0	94.3	110.4	133.2	
	571	**569**	**565**	**548**	**539**	**530**	**520**	

FFPMV500 (518 cm³/U)

Druck / *pressure* (bar)

Durchflussmenge / ***Oil flow*** (l/min)

	35	70	100	140	180	200 (Max. cont.)	240 (Max. Int.)	
10	24.2	46.8	69.6	95.9	119.0	135.3	160.7	daNm
	17	**17**	**16**	**16**	**15**	**13**	**11**	RPM
20	24.5	50.1	73.8	100.3	123.2	139.4	165.8	
	36	**35**	**35**	**34**	**33**	**32**	**29**	
50	24.0	50.0	75.8	102.5	127.0	144.9	174.3	
	93	**92**	**91**	**90**	**88**	**85**	**80**	
75	23.3	49.8	75.2	103.0	128.8	147.5	176.6	
	140	**139**	**137**	**135**	**132**	**127**	**120**	
100	22.8	49.1	74.8	102.6	128.9	147.2	176.0	
	189,0	**187,0**	**185,0**	**182,0**	**178,0**	**173,0**	**166**	
125	22.0	48.3	74.2	101.4	128.0	146.0	174.5	
	237	**236**	**234**	**231**	**227**	**223**	**216**	
150	20.1	46.5	72.3	100.8	125.0	142.9	173.6	
	287	**286**	**284**	**281**	**276**	**270**	**260**	
175	18.2	44.6	71.1	99.7	123.8	140.6	171.5	
	335	**334**	**332**	**329**	**325**	**320**	**310**	
200 (Max. cont.)	16.1	42.3	67.6	97.4	121.8	138.5	169.7	
	384	**383**	**381**	**378**	**374**	**366**	**354**	
240 (Max. int.)	12.0	37.8	62.2	92.1	117.2	134.0	165.0	
	461	**459**	**457**	**454**	**450**	**444**	**432**	

50% OFF ALL PRICES

Leistungsdaten

FFPMV630 (666 cm³/U)

Druck / *pressure* (bar)

Durchflussmenge / ***Oil flow*** (l/min)

	35	60	90	120	150	180 (Max. cont.)	210 (Max. Int.)
10	28.0 **14**	52.2 **13**	81.2 **13**	110.0 **12**	126.8 **12**	154.9 **11**	178.4 **10**
20	28.8 **28**	55.2 **28**	83.9 **27**	110.1 **27**	131.5 **26**	160.7 **24**	186.4 **22**
50	28.9 **72**	55.5 **72**	86.8 **71**	113.7 **69**	136.4 **68**	168.2 **66**	195.6 **62**
75	27.0 **109**	54.8 **108**	86.3 **106**	112.0 **104**	135.2 **102**	168.0 **99**	196.4 **94**
100	26.4 **146**	53.8 **145**	85.6 **143**	109.3 **141**	135.0 **138**	167.4 **135**	196.5 **130**
125	25.1 **184**	51.6 **183**	83.7 **181**	107.1 **179**	133.6 **177**	165.9 **173**	195.0 **168**
150	24.0 **221**	49.5 **220**	81.7 **219**	106.3 **217**	133.0 **215**	165.0 **212**	192.8 **205**
175	21.0 **259**	48.5 **258**	79.6 **257**	105.2 **254**	130.0 **250**	163.6 **246**	190.8 **241**
200 (Max. cont.)	18.2 **297**	46.9 **297**	75.1 **295**	101.8 **293**	128.0 **290**	161.1 **284**	188.3 **273**
240 (Max. int.)	13.0 **358**	41.6 **357**	71.2 **355**	97.8 **351**	123.7 **346**	156.3 **340**	183.5 **332**

Performance data

FFPMV800 (801 cm³/U)

Druck / *pressure* (bar)

Durchflussmenge / ***Oil flow*** (l/min)

	25	50	80	100	130	160 (Max. cont.)	180 (Max. Int.)
10	27.8 **11**	56.5 **10**	83.0 **10**	109.5 **9**	140.5 **8**	171.2 **8**	191.5 **7**
20	28.2 **23**	57.1 **22**	84.5 **22**	115.0 **21**	145.6 **20**	178.3 **18**	199.4 **16**
50	28.8 **60**	58.2 **59**	85.6 **57**	116.2 **56**	146.3 **54**	179.0 **52**	200.1 **48**
75	26.9 **91**	58.0 **90**	85.5 **89**	116.5 **87**	146.5 **84**	178.6 **81**	199.3 **77**
100	25.1 **122**	56.6 **121**	84.0 **120**	114.0 **118**	144.8 **115**	176.7 **111**	198.5 **105**
125	24.2 **153**	53.5 **152**	82.4 **150**	111.8 **147**	142.7 **143**	173.9 **139**	197.6 **133**
150	23.6 **185**	52.6 **183**	80.8 **181**	110.2 **178**	140.1 **174**	171.4 **169**	195.9 **163**
175	21.5 **216**	50.4 **214**	79.3 **212**	107.9 **209**	137.7 **206**	169.8 **203**	193.6 **196**
200 (Max. cont.)	19.7 **247**	46.8 **245**	76.5 **243**	106.3 **240**	136.2 **237**	168.1 **232**	191.3 **225**
240 (Max. int.)	11.8 **297**	38.8 **296**	71.3 **295**	102.0 **293**	131.8 **288**	163.7 **283**	183.8 **277**

FFPMV1000 (990 cm³/U)

Druck / *pressure* (bar)

	25	50	70	100	140 (Max. cont.)	160 (Max. Int.)
10	31.2 **9**	64.0 **9**	97.1 **9**	140.0 **8**	197.8 **7**	225.9 **6**
20	32.0 **28**	64.8 **27**	97.8 **26**	141.0 **25**	198.0 **23**	227.0 **21**
50	32.6 **47**	65.5 **46**	99.2 **45**	142.2 **43**	201.5 **41**	228.0 **38**
75	31.8 **72**	64.2 **71**	98.7 **70**	142.5 **68**	200.3 **66**	227.6 **63**
100	30.9 **98**	63.4 **97**	98.3 **95**	141.8 **93**	199.4 **90**	224.3 **86**
125	30.3 **123**	62.4 **122**	97.5 **120**	140.9 **117**	198.8 **114**	222.4 **110**
150	27.8 **149**	60.2 **148**	96.1 **146**	136.8 **144**	196.3 **140**	220.8 **133**
175	26.4 **174**	58.0 **172**	94.6 **170**	133.8 **166**	192.5 **162**	215.9 **155**
200 (Max. cont.)	23.0 **199**	55.6 **196**	91.2 **193**	130.0 **190**	189.1 **185**	210.5 **178**
240 (Max. int.)	16.6 **240**	51.3 **237**	86.7 **233**	126.7 **229**	182.5 **225**	203.4 **218**

Abmessungen

Dimensions

Anschlüsse / *Porting*

Seitenanschluss / ***Side Ports***

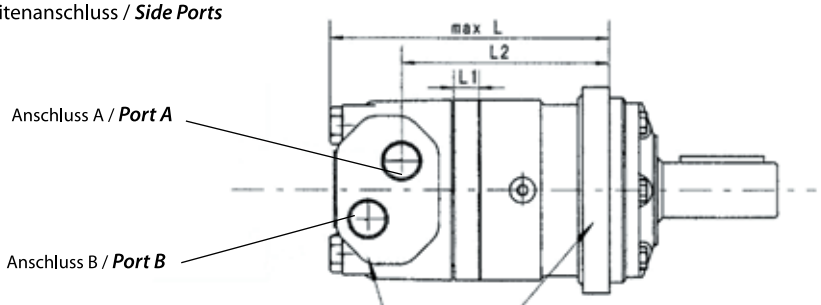

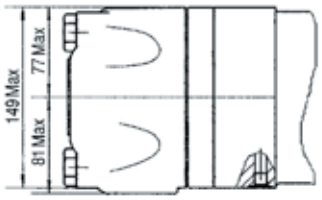

Quadratflansch 4-loch / ***Square flange 4 holes***

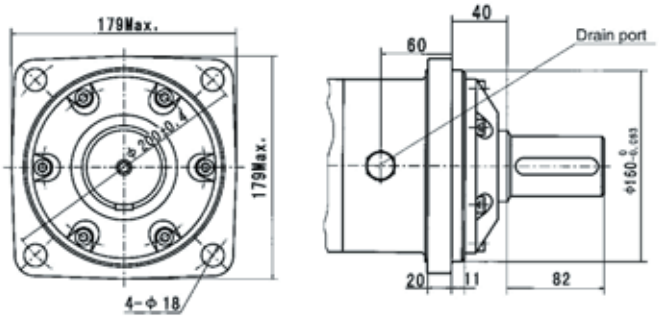

Version G M

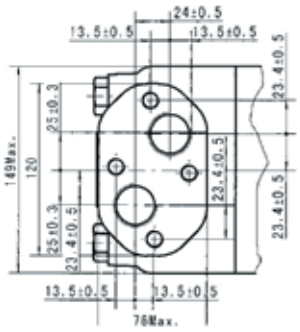

W Radflansch / ***Wheelflange***

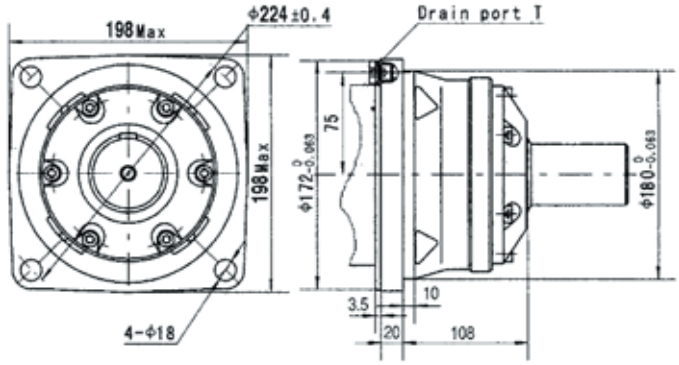

Version U

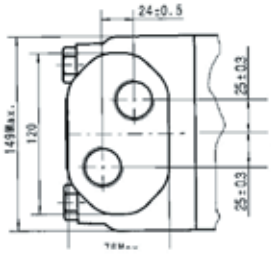

An-schluss / *Port*	**Versionen / *Versions***		
	Leer (Tief)/ *Omit (depth)*	M (Tief / *depth*)	U (Tief / *depth*)
P(A,B)	2 x G 1" (18)	2 x M33 x 2 18	2 x 1 5/16"-12UN (18)
T	G 1/4" (12)	M14 x 1,5 (12)	9/16-18 UNF (12)
C	4 x M12 (10)	4 x M12 (10)	-

Typ / *Type*	L	L_2	Typ / *Type*	L	L_2	L_1
FFPMV 315	217	161.5	FFPMVW 315	148.5	93.5	20
FFPMV 400	224	168.5	FFPMVW 400	155.5	100.5	27
FFPMV 500	232	176.5	FFPMVW 500	163.5	108.5	35
FFPMV 630	244	188.5	FFPMVW 630	175.5	120.5	47
FFPMV 800	255	199.5	FFPMVW 800	186.5	131.5	58
FFPMV 1000	271	215.5	FFPMVW 800	202.5	147.5	74

50% OFF ALL PRICES

Zulässiger Druck auf den Wellendichtring
Permissible shaft seal pressure

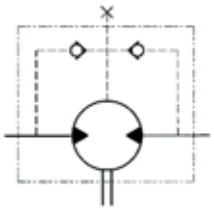

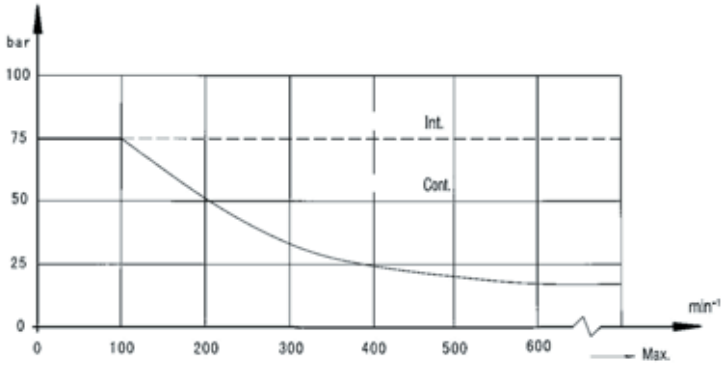

Motordrehrichtung
Motor rotation

Drehrichtung rechts: Anschluss „A" ist druckbeaufschlagt.
Drehrichtung links: Anschluss „B" ist druckbeaufschlagt.
Clockwise rotation: port „A" is pressurized.
Counter-clockwise rotation: port „B" is pressurized.

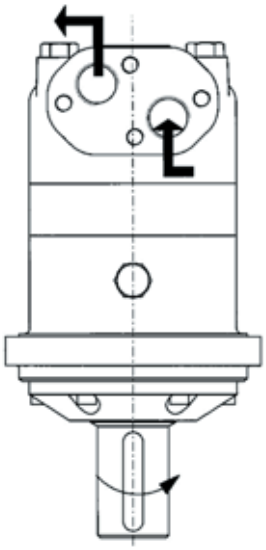

Wellenbelastung
Shaft Load

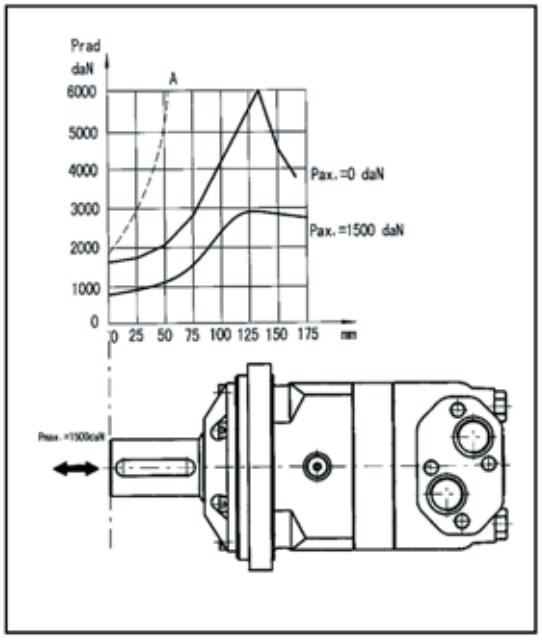

Durch die integrierten Schrägrollenlager sind die Motoren vom Typ FFPMV in der Lage hohe Axial- und Radialkräfte aufzunehmen. Die gestrichelte Linie im seitlichen Diagramm zeigt die maximal zulässige Radialkraft. Belastungen oberhalb dieser Grenze können zum Bruch der Welle führen. Die durchgezogenen Linien zeigen die zulässigen Radialbelastungen bei einer Lebensdauer von 3000h bei 200 U/min.
The tapered roller bearings on the output shaft can accept high levels of axial and radial load for FFPMV motors. The broken curve shows the maximum permissible radial load. Loads above and beyond this level can lead to breakage. The solid curve plots the permissable radial loads for a theoretical service life of 3000 hours at 200 RPM.

Abtriebswellen

C - Ø 50 mm zylindrisch mit Passfeder A14 x 9 x 70 (DIN 6885) / ***Ø 50mm straight, parallel key A14 x 9 x 70 (DIN 6885)***

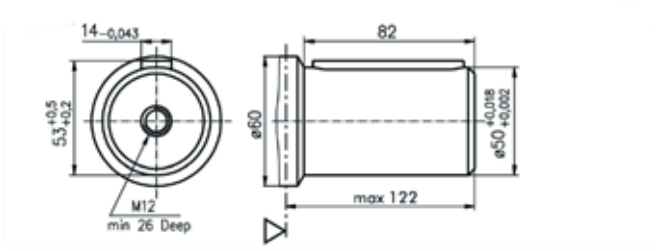

Output shafts

SH - Ø 2⅛" verzahnt, 16 DP 8/16 ANS B92.1-1976 / ***Ø 2⅛" splined, 16 DP 8/16 ANS B92.1-1976***

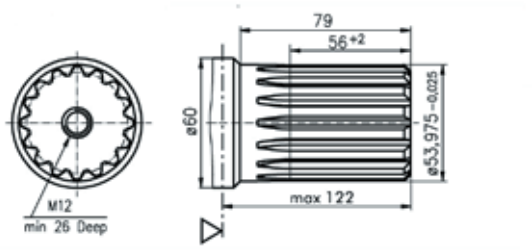

CO - Ø 57.15 mm (2¼") zylindrisch mit Passfeder ½" x ½" x 2¼" BS46.
Ø 57.15 mm (2¼") straight, parallel key ½" x ½" x 2¼" BS46.

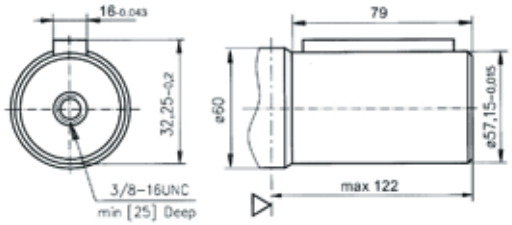

K - kon. 1:10 mit Passfeder B16 x 10 x 32 DIN 6885 / ***conical 1:10, parallel key B16 x 10 x 32 DIN 6885.***

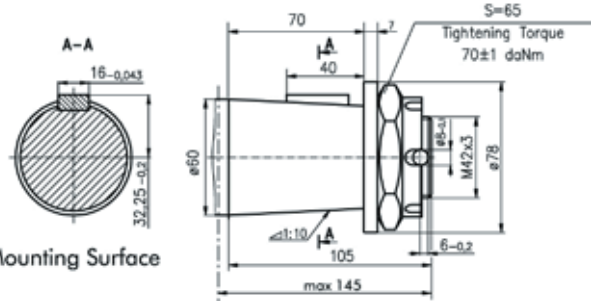

▽ - Motor Mounting Surface

Bestellinformationen

Order Information

	1	2	3	4	5	6	7
FFPMV							

Pos. 1	Montageflansch / *Mounting flange*
Leer / *Omit*	Quadratflansch 4-loch / *Square flange 4-holes*
W	Radflansch / *Wheel mount*

Pos. 2	Schluckvolumen / *Displacement*
315	315 cm³/U / *315 ccm/REV*
400	400 cm³/U / *400 ccm/REV*
500	500 cm³/U / *500 ccm/REV*
630	630 cm³/U / *630 ccm/REV*
800	800 cm³/U / *800 ccm/REV*
1000	1000 cm³/U / *1000 ccm/REV*

Pos. 3	Wellenausführungen / *Shaft extensions*
C	Ø 50 mm zylindrisch mit Passfeder **A14 x 9 x 70 (DIN6885)** *Ø 50 mm straight, parallel key A14 x 8 x 70.*
CO	Ø 57.15 mm (2¼") zylindrisch mit Passfeder ½" x ½" x 2¼" *Ø 57.15 mm (2¼") zylindrisch mit Passfeder ½" x ½" x 2¼"*

K	Konisch 1:10 mit Passfeder B16 x 10 x 32 *Conical 1:10 with key B16 x 10 x 32*
SH	Ø 2⅛" verzahnt, 17 Zähne *Ø 2⅛" splined, 17T.*

Pos. 5	Anschlüsse / *Porting*
Leer / *Omit*	G 1" / *G 1"*
M	Metrisch 2 x M33 x 2 / *Metric 2 x M33 x 2*
U	2 x 1⅝"-12 UN, T: ⅜ - 18 UNF *2 x 1⅝"-12 UN, T: ⅜ - 18 UNF*

Pos. 6	Farbe / *Painting*
Leer / *Omit*	Grau / *Grey*
RAL...	+ Ralfarbe (z.B. 7021) / *+ Ral colour (e.g. 7021)*

Pos. 7	Drehrichtung / *Rotation direction*
Leer / *Omit*	Standarddrehrichtung / *Standard Rotation*
R	Umgekehrte Drehrichtung / *Reverse Rotation*

50% OFF ALL PRICES

HYDRAULIC MOTOR PRICE LIST - BUILD YOUR OWN

FFPMV HYDRAULIC MOTOR

STANDARD OPTIONS INCLUDED FFPMV	PART NUMBER	PRICE
SIDE PORTS: 2 X G 1" (BSP)	FFPMV 315	£536.89
Ø 50 C	FFPMV 400	£558.72
SHAFT TYPE Ø 50 C	FFPMV 500	£591.34
	FFPMV 630	£619.16
Q.-FLANGE T YPE 179, 4 X Ø 18 ON DIA 200	FFPMV 800	£694.34
SHAFT OPTIONAL EXTRAS FFPMV		
SPLINED Ø 53,975, 8/16 D.PITCH, 30°, Z/T = 16	SH: ADD	£10.10
SHAFT TAPERED 1:10, B16X10X32	TB = (K) :ADD	£12.58
FLANGE OPTIONAL EXTRAS FFPMV		
WHEEL FLANGE	W: ADD	£40.44
SEAL KIT FFPMV	SEAL KIT FFPMV	£26.70

HYDRAULIC MOTOR PRICE LIST - COMPLETE

PART NUMBER	DESCRIPTION	PRICE
FFPMV315C	HYDRAULIC MOTOR FFPMV315C, 333 CCM/REV, CYL. SHAFT 50MM, 4-HOLE FLANGE	£536.88
FFPMV315SH	HYDRAULIC MOTOR FFPMV315SH, 333 CCM/REV, SPLINED SHAFT, 4-HOLE FLANGE	£546.98
FFPMV400C	HYDRAULIC MOTOR FFPMV400C, 419 CCM/REV, CYL. SHAFT 50MM, 4-HOLE FLANGE	£558.70
FFPMV500C	HYDRAULIC MOTOR FFPMV500C, 518 CCM/REV, CYL. SHAFT 50MM, 4-HOLE FLANGE	£591.35
FFPMV630C	HYDRAULIC MOTOR FFPMV630C, 666 CCM/REV, CYL. SHAFT 50MM, 4-HOLE FLANGE	£619.16
FFPMV800C	HYDRAULIC MOTOR FFPMV800C, 801 CCM/REV, CYL. SHAFT 50MM, 4-HOLE FLANGE	£694.33
FFPMV800K	HYDRAULIC MOTOR FFPMV800K, 801 CCM/REV, CONICAL SHAFT 1:10, 4-HOLE FLANGE	£706.91
FFPMVW400K	HYDRAULIC MOTOR FFPMVW400K, 419 CCM/REV, CON. SHAFT 1:10, WHEEL FLANGE	£611.72
FFPMVW500K	HYDRAULIC MOTOR FFPMVW500K, 518 CCM/REV, CON. SHAFT 1:10, WHEEL FLANGE	£644.36
FFPMVW630C	HYDRAULIC MOTOR FFPMVW630C, 666 CCM/REV, CON. SHAFT 50MM, WHEEL FLANGE	£659.59
FFPMVW630K	HYDRAULIC MOTOR FFPMVW630K, 666 CCM/REV, CON. SHAFT 1:10, WHEEL FLANGE	£672.17
FFPMVW800C	HYDRAULIC MOTOR FFPMVW800C, 801 CCM/REV, CYL. SHAFT 50MM, WHEEL FLANGE	£734.76
FFPMVW800K	HYDRAULIC MOTOR FFPMVW800K, 801 CCM/REV, CONICAL SHAFT 1:10, WHEEL-FLANGE	£747.33

Calculation of hydraulic motors

Calculation of wheel drives:

1. Motor speed n of wheel drive:

$$n = \frac{2{,}65 \cdot v_{km} \cdot i}{R_m}$$

v_{km} = Vehicle speed [km/h]
R_m = Wheel rolling radius [m]
i = Gear ratio between motor and wheels, if there's no gearbox use i=1

2. Rolling resistance R, [daN]

The resistance force resulted in wheels contact with different surfaces:

$$R = G \cdot \varphi$$

G = Total weight of vehicle [daN]
φ = Rolling resistance coefficient (s. below)

Rolling resistance coefficient in case of rubber tire rolling on different surfaces	
Surface	**φ**
Concrete - faultless -	0.010
Concrete - good -	0.015
Concrete - bad -	0.020
Asphalt - faultless -	0.012
Asphalt - good -	0.017
Asphalt - bad -	0.022
Macadam - faultless -	0.015
Macadam - gut -	0.022
Macadam - bad -	0.037
Snow - 5cm -	0.025
Snow 10 cm -	0.037
Mud	0.037 - 0.150
Sand- gravel	0.060 - 0.150
Sand, loose	0.160 - 0.300

3. Grade resistance G_R, daN

$$G_R = G \cdot (\sin \alpha + \rho \cdot \cos \alpha)$$

α = gradient negotiation angle (see below table)

Grade [%]	α degrees	Grade [%]	α degrees
1	0°35′	12	6°5′
2	1°9′	15	8°31′
5	2°51′	20	11°19′
6	3°26′	25	14°3′
8	4°35′	32	18°
10	5°43′	60	31°

4. Accelerate force FA [daN]

Force FA necessary for acceleration from 0 to maximum speed v and time t can be calculated with::

$$FA = \frac{v_{km} \cdot G}{3{,}6 \cdot t} [daN]$$

FA = Acceleration force [daN]
t = Time [s]

Additional there are tractive efforts possible, e.g. if you use an additional trailor.

5. Total tractive effort F_{ges} [daN]

The neccessary total tractive effort F_{ges} of the vehicle is calculated with the sum of single forces (point 2. - 4.). It is also necessary to consider 10% for safety reasons (e.g. for air resistance).

$$F_{ges} = 1{,}1 \cdot (R + G_R + FA)$$

R = Rolling resistance [daN]
G_R = Grade resistance [daN]
FA = Acceleration force [daN]

6. Motordrehmoment M_M

Necessary torque for every hydraulic motor can be calculated with:

$$M_M = \frac{F_{Ges} \cdot R_m}{N \cdot i \cdot \eta_M}$$

N = Number of motors
η_M = Mechanical gear efficiency (if it is available)

7. Connection of hydraulic motors

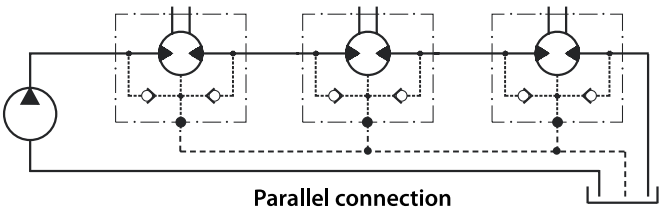

Parallel connection

We are allways advise to connect the drain port because the cooling and the lifetime of the motors is much better.

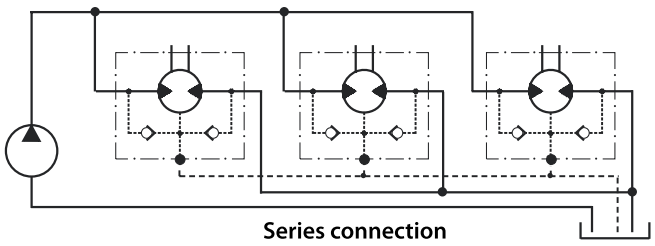

Series connection

M+S HYDRAULIC

HYDRAULIC MOTORS

Suitable for many low-speed applications, eliminating gears, shafts, chains, belts, pulleys and other speed reduction components. All motors are compact and light in weight in proportion to the torque and power delivered, all are fully reversible

EPMM MOTOR.....202
EPM MOTOR.....202
EPRM MOTOR.....203
EPMS MOTOR.....203
EPMT MOTOR.....204
EPMV MOTOR.....204
ELB BRAKES.....205
HKU & HKUS STEERING UNITS.....205

A FULL RANGE OF METRIC & SAE HYDRAULIC MOTORS PLUS ORBITAL STEERING UNITS

INTERCHANGES WITH MOST POPULAR MAKES INCLUDING DANFOSS - EATON CHAR LYNN PARKER TRW - ADAN - SAM - WHITES

M+S HYDRAULIC

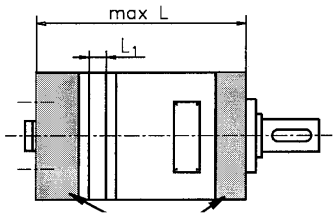

EPMM MOTOR

M+S HYDRAULIC

Use on machine tools, augers, drilling/tapping machines, conveyors, sweepers, fans etc. Compact size fits almost anywhere.

Code example **EPMM-** MODEL **S-** BODY OPTION **32-** TYPE **C** SHAFT

BODY OPTIONS		
CODE	**DESCRIPTION**	**PRICE**
-	Rear ports	£0.00
S	Side ports	£0.00
P	Integral single relief valve	£18.09
D	Integral dual relief valve	£36.26
F	2 bolt flange	£15.52

SHAFT OPTIONS		
CODE	**DESCRIPTION**	**PRICE**
C	16mm straight keyed shaft	£0.00
CK	14mm straight keyed shaft	£0.00
SH	16.5mm splined shaft	£6.99

Type EPMM [cc Rev]	8	12,5	20	32	40	50
Max. Intermitt. Speed [RPM]	2440	1940	1250	790	625	500
Max. Peak Torque, [daNm]	2,1	3,3	5,1	6,4	6,6	8
Max. Peak Pressure, [bar]	200	200	200	200	140	125
Max.Intermitt. Power, [kW]	2,6	3,2	3,2	3,2	3,0	2,1
Max Length L	104	106	109	114	118	122
PRICE	£250.46	£254.60	£258.84	£263.25	£281.19	£314.58

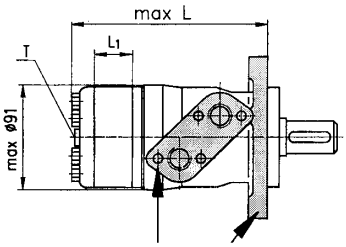

EPM MOTOR

M+S HYDRAULIC

Use these motors on grain elevators, post hole diggers, lift trucks, fertilizer spreaders, winches + mowing machines.

Code example **EPM-** MODEL **-** BODY OPTION **50-** TYPE **C** SHAFT

BODY OPTIONS		
CODE	**DESCRIPTION**	**PRICE**
-	Standard 2 bolt	£0.00
F	Oval mount 4 bolt	£11.21
W	Wheel mount	£51.75
Q	Square mount 4 bolt	£21.06
N	Needle bearings	£55.48
E	Rear ports	£25.89
D	High pressure shaft seal	£22.99

SHAFT OPTIONS		
CODE	**DESCRIPTION**	**PRICE**
C	25mm straight keyed shaft	£0.00
CO	1" straight keyed shaft	£0.00
SH	1" 6B splined shaft	£6.87
K	28.58mm dia taper 1:10	£16.18
CB	32mm straight keyed shaft	£16.18
KB	35mm dia taper 1:10	£21.59

Type EPM [cc Rev]	25	32	40	50	80	100	125	160	200	250	315	400	500	630
Max. Intermitt. Speed [RPM]	1800	1720	1760	1515	945	755	605	472	378	303	236	189	150	120
Max. Peak Torque, [daNm]	6,7	8,6	11,3	14,3	22,4	27,5	36,5	43.8	55	68,5	85	85,4	78	82
Max. Peak Pressure, [bar]	225	225	225	225	225	225	225	225	255	225	225	180	130	110
Max.Intermitt. Power, [kW]	6,1	7,8	10	12,2	12,5	12,8	12	12	12	12	9	7,8	7,2	5,6
Max Length L	134	135	136	136	140	143	146	150	156	156	172	183	193	211
PRICE	£272.47	£284.25	£277.70	£280.02	£288.20	£293.61	£301.84	£310.01	£320.83	£328.95	£337.16	£350.78	£433.03	£508.09

FOR FLOW REGULATOR VALVES	FOR FLOW REGULATOR VALVES	FOR DIVERTER VALVES	FOR FLOW DIVIDERS (IF TWO OR MORE CYLINDERS ARE REQUIRED TO ACT AT SAME SPEED)	FOR DUAL CROSS RELIEF VALVES
SEE CARTRIDGE VALVE SECTION	**SEE CARTRIDGE VALVE SECTION**	**SEE CARTRIDGE VALVE SECTION**	**SEE CARTRIDGE VALVE SECTION**	**SEE CARTRIDGE VALVE SECTION**

50% OFF ALL PRICES

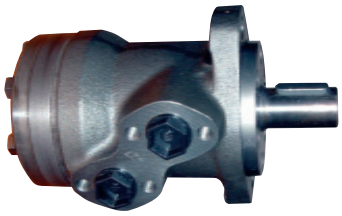

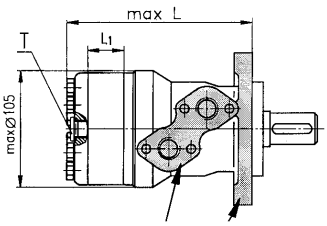

EPRM MOTOR

M+S HYDRAULIC

Code example **EPRM-** (MODEL) **–** (BODY OPTION) **125-** (TYPE) **C** (SHAFT)

BODY OPTIONS		
CODE	**DESCRIPTION**	**PRICE**
-	Standard 2 bolt	£0.00
F	Oval mount 4 bolt	£10.66
W	Wheel mount	£104.11
Q	Square mount 4 bolt	£19.87
N	Needle bearings	£52.03
E	Rear ports	£24.43
D	High pressure shaft seal	£21.69

SHAFT OPTIONS		
CODE	**DESCRIPTION**	**PRICE**
C	25mm straight keyed shaft	£0.00
CO	1" straight keyed shaft	£0.00
SH	1" 6B splined shaft	£6.87
K	28.58mm dia taper 1:10	£16.18
CB	32mm straight keyed shaft	£16.18
KB	35mm dia taper 1:10	£21.59

Type EPRM [cc Rev]	50	80	100	125	160	200	250	315	400
Max. Intermitt. Speed [RPM]	970	940	750	600	490	375	300	240	190
Max. Peak Torque, [daNm]	17	27	32	37	46	56	71	83	87
Max. Peak Pressure, [bar]	225	225	225	225	225	255	225	210	175
Max.Intermitt. Power, [kW]	8,5	15	15	14,5	14	11,5	10,5	9,6	8,8
Max Length L	138	143	146	151	157	164	172	183	198
PRICE	£350.04	£360.22	£366.99	£377.28	£387.51	£400.40	£411.23	£421.67	£438.43

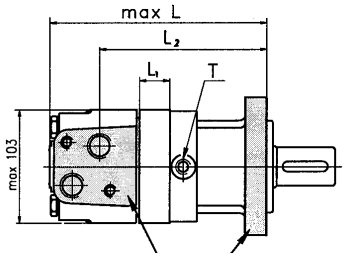

EPMS MOTOR

M+S HYDRAULIC

Code example **EPMS-** (MODEL) **-** (BODY OPTION) **400-** (TPYE) **C** (SHAFT)

BODY OPTIONS		
CODE	**DESCRIPTION**	**PRICE**
-	Standard 4 bolt	£0.00
F	Oval mount 4 bolt	+£30.42
A	SAE A 2 bolt	£0.00
S	Short motor	-£89.10
W	Wheel mount	+£25.37

SHAFT OPTIONS		
CODE	**DESCRIPTION**	**PRICE**
C	32mm straight keyed shaft	£0.00
CO	1 1/4" straight keyed shaft	£0.00
SH	1 1/4" 14T splined shaft	+£7.34
K	35mm dia taper 1:10	+£16.18
CB	1 3/8" tractor pto 6 spline	+£302.43

Type EPMS [cc Rev]	80	100	125	160	200	250	315	400
Max. Intermitt. Speed [RPM]	1000	900	720	560	450	360	285	225
Max. Peak Torque, [daNm]	26	32	40	51	65	69	84	85
Max. Peak Pressure, [bar]	225	225	255	225	225	200	185	140
Max.Intermitt. Power, [kW]	19	21	21	21	17,5	15	13,5	13
Max Length "L"	166	169	174	180	187	195	207	221
PRICE	£577.71	£584.55	£594.69	£608.29	£618.49	£629.48	£666.06	£700.02

FOR FLOW REGULATOR VALVES	FOR FLOW REGULATOR VALVES	FOR DIVERTER VALVES	FOR FLOW DIVIDERS (IF TWO OR MORE CYLINDERS ARE REQUIRED TO ACT AT SAME SPEED)	FOR DUAL CROSS RELIEF VALVES
SEE CARTRIDGE VALVE SECTION	**SEE CARTRIDGE VALVE SECTION**	**SEE CARTRIDGE VALVE SECTION**	**SEE CARTRIDGE VALVE SECTION**	**SEE CARTRIDGE VALVE SECTION**

EPMT MOTOR

M+S HYDRAULIC

Code example **EPMT-** MODEL **500-** TYPE **C** SHAFT

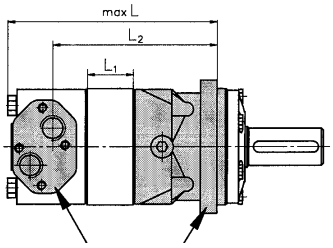

BODY OPTIONS		
CODE	**DESCRIPTION**	**PRICE**
-	Standard 4 bolt	£0.00
S	Short motor	-£121.40
W	Wheel mount	+£84.13

SHAFT OPTIONS		
CODE	**DESCRIPTION**	**PRICE**
C	40mm straight keyed shaft	£0.00
CO	1 1/2" straight keyed shaft	£0.00
SL	1 3/8" tractor pto 6 spline	+£62.03
K	45mm dia 1:10 taper shaft	+£31.72
SH	1 1/2" 17T splined shaft	+£14.26

Type EPMT [cc Rev]	160	200	250	315	400	500
Max. Intermitt. Speed [RPM]	780	750	600	460	365	285
Max. Peak Torque, [daNm]	66	82	102	133	144	160
Max. Peak Pressure, [bar]	280	280	280	280	240	210
Max.Intermitt. Power, [kW]	32	40	40	40	35	30
Max Length "L"	190	195	201	211	221	235
PRICE	£1,033.16	£1,055.21	£1,088.77	£1,116.79	£1,161.44	£1,239.60

EPMV MOTOR

M+S HYDRAULIC

Code example **EPMV-** MODEL **-** BODY OPTION **630-** TYPE **C** SHAFT

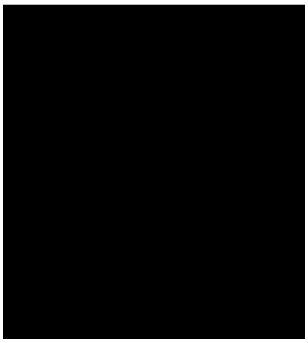

BODY OPTIONS		
CODE	**DESCRIPTION**	**PRICE**
-	Standard 4 bolt	£0.00
S	Short motor	-£170.02
W	Wheel mount	+£132.58

SHAFT OPTIONS		
CODE	**DESCRIPTION**	**PRICE**
C	50mm straight keyed shaft	£0.00
CO	2 1/4" straight keyed shaft	£0.00
K	60mm dia 1:10 taper shaft	+£41.22
SH	2 1/8" 16T splined shaft	+£33.10

Type EPMV [cc Rev]	315	400	500	630	800
Max. Intermitt. Speed [RPM]	630	600	480	380	300
Max. Peak Torque, [daNm]	129	164	205	221	247
Max. Peak Pressure, [bar]	280	280	280	240	210
Max.Intermitt. Power, [kW]	51	64	64	56	48
Max Length "L"	215	222	230	240	254
PRICE	£1,473.17	£1,532.02	£1,635.02	£1,914.56	£2,017.14

FOR FLOW REGULATOR VALVES	FOR FLOW REGULATOR VALVES	FOR DIVERTER VALVES	FOR FLOW DIVIDERS (IF TWO OR MORE CYLINDERS ARE REQUIRED TO ACT AT SAME SPEED)	FOR DUAL CROSS RELIEF VALVES
SEE CARTRIDGE VALVE SECTION	**SEE CARTRIDGE VALVE SECTION**	**SEE CARTRIDGE VALVE SECTION**	**SEE CARTRIDGE VALVE SECTION**	**SEE CARTRIDGE VALVE SECTION**

50% OFF ALL PRICES

ELB BRAKES

Hydraulic Disc Brakes are designed for use with heavy duty machinery and off-highway vehicles in the construction, material handling, agriculture, mining, sanitation and timber industries. They are also used in a multitude of winching applications and in hydrostatic engine drive systems.

The Hydraulic Disk Brake is sprung loaded to apply the brake, and hydraulic pressure is required to release the brake. Normal operation is to have the brake pressurized in the released position with the vehicle hydraulic system running. Any function which reduced the hydraulic system pressure below the release pressure of the brake will allow the springs to apply the brake.

This brake is designed to be a parking brake only. Dynamic braking is not recommended.

Code example **ELB288-** (MOTOR TYPE) **43-** (SIZE) **C** (OUTPUT SHAFT OPTION)

OUTPUT SHAFT OPTIONS					
ELB288		ELB289/90		ELB314/315	
C	25mm straight keyed shaft	CB	32mm straight keyed shaft	C	40mm straight keyed shaft
CO	1" straight keyed shaft	KB	35mm dia 1:10 taper shaft	CO	1 1/2" straight keyed shaft
SH	1" 6B splined shaft			SH	1 1/2" 17T splined shaft
				K	45mm dia 1:10 taper shaft

		SIZE										
PART NUMBER		7	14	21	29	32	43	63	65	85	110	130
TYPE ELB 288-***-**	EPM, EPRM,EPMS	*	*	*		*	*	*				
TYPE ELB 289-***-**	EPMSS (standard mount)			*		*	*	*				
TYPE ELB 290-***-**	EPMSS (wheel mount)			*		*	*	*				
TYPE ELB 314-***-**	EPMTS (standard mount)			*	*		*		*	*	*	*
TYPE ELB 315-***-**	EPMTS (wheel mount)			*	*		*		*	*	*	*
Static torque, [daNm]		6-8	13-15	20-22	28-29	31-34	42-45	61-64	61-70	83-92	108-118	126-136
Opening pressure min, [bar]		4-5	8-9	12-13	6-7	18-20	24-26	38-39	13-15	18-20	23-25	27-29
Opening pressure max, [bar]		300										

HKU & HKUS STEERING UNITS

The M+S Hydraulic Hydrostatic Steering units are used in low-speed vehicles which driving speed does not exceed 60 km/h - such as : building machines, fork-lift trucks, harvesting machines, off-highway eqipment and others. These hydraulic units amplify the torgue to the steering wheels, with no need of hard mechanical connection.

The XY hydrostatic steering unit incorporates an axially displaced tracing valve and a metering pump in one housing. The working liguid is supplied by a seperate pump and then is directed by he metering pump to the steering cylinders.

The XY steering unit is manufactured with a built-in check valves, and there is an option for a built-in relief valve in the inlet.

Various options available.
Please contact us for further details.

FOR FLOW REGULATOR VALVES	FOR FLOW REGULATOR VALVES	FOR DIVERTER VALVES	FOR FLOW DIVIDERS (IF TWO OR MORE CYLINDERS ARE REQUIRED TO ACT AT SAME SPEED)	FOR DUAL CROSS RELIEF VALVES
SEE CARTRIDGE VALVE SECTION	SEE CARTRIDGE VALVE SECTION	SEE CARTRIDGE VALVE SECTION	SEE CARTRIDGE VALVE SECTION	SEE CARTRIDGE VALVE SECTION

BOLT ON HYDRAULIC VALVES TO SUIT FLOWFIT AND M+S HYDRAULIC MOTORS

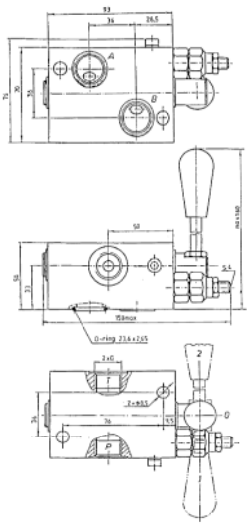

BDR TYPE

FLOWFIT

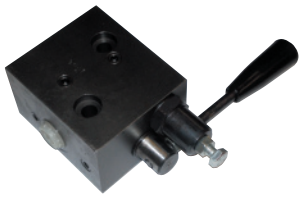

MOTOR MOUNTED, LEVER OPERATED DIRECTIONAL CONTROL VALVES C/W 3 POSITION DETENT KIT

Manifold mounts directly onto ports of EPM & EPRM (OMP & OMR) motor.

TECHNICAL DATA
Nominal flow rate 25 l/min for X = 38 • Nominal flow rate 50 l/min for X = 12
Nominal pressure 210 bar • Relief valve variation ratio 10-250 bar

PART NO.	FLOW L/MIN	NOMINAL PRESSURE (BAR)	PRICE
BDR-38-04	25	210	£265.58
BDR-38-05	25	210	£265.58
BDR-12-04	50	210	£265.58
BDR-12-05	50	210	£265.58

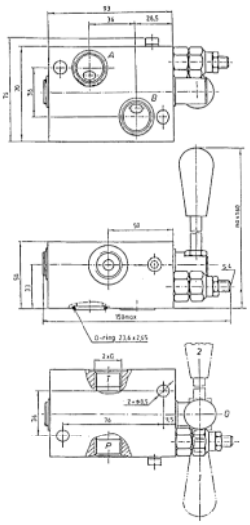

BDS TYPE

FLOWFIT

MOTOR MOUNTED, LEVER OPERATED DIRECTIONAL CONTROL VALVES C/W 3 POSITION DETENT KIT AND INTEGRAL RELIEF VALVE

Manifold mounts directly onto ports of EPMS (OMS) motor.

TECHNICAL DATA
Nominal flow rate 25 l/min for X = 38 • Nominal flow rate 50 l/min for X = 12
Nominal pressure 210 bar • Relief valve variation ratio 10-250 bar

PART NO.	FLOW L/MIN	NOMINAL PRESSURE (BAR)	PRICE
BDS-38-04	25	210	£265.58
BDS-38-05	25	210	£265.58
BDS-12-04	50	210	£265.58
BDS-12-05	50	210	£265.58

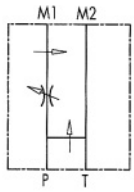

3 PORT FLOW CONTROL VALVE EXCESS TO TANK FLANGEABLE ON DANFOSS MOTORS OMP/OMR

USE AND OPERATION

This valve enables to keep "P" flow constant to a certian setting, independently of the required pressure or the inlet flow of the valve. Exceeded flow is drained directly in T (tank).

Body: zinc-plated steel

Internal parts: Hardened and ground steel

Seals: Buna N standard

Tightness: By diameter combination. Minor leakage (few drops per minute)

Applications: Connect M1 and M2 to the motor and P and T to the pressure.

PART NO.	TYPE	BSP PORTS	MAX INLET FLOW	MAX ADJUSTED FLOW	MAX PRESSURE (BAR)	PRICE
V1121	RFP3 1/2" OMP/OMR	1/2"	50 L/MIN	30 L/MIN	350	£149.74

BVR TYPE

FLOWFIT

BVR TYPE MOTOR MOUNTED PRESSURE COMPENSATED FLOW CONTROL VALVE

Manifold mounts directly onto ports of EPM and EPRM (OMP + OMR MOTORS)

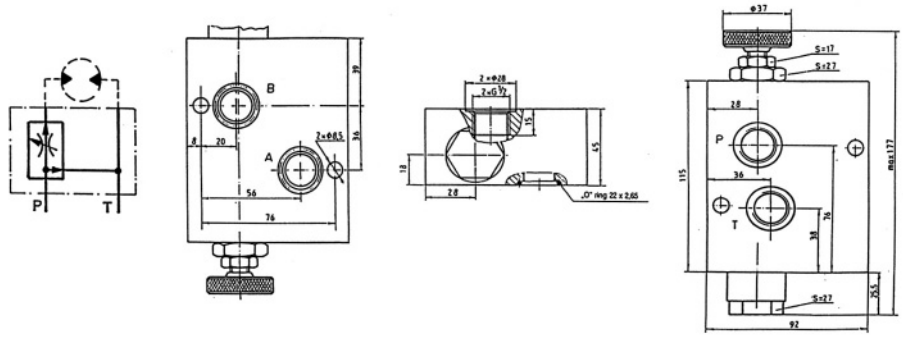

PART NO.	FLOW L/MIN	MAX PRESSURE (BAR)	PRICE
BV/R/12/05	100	250	£241.23

OVERCENTRE VALVES FLANGEABLE ON DANFOSS MOTORS OMP/OMR

Direct flange is ideal for Danfoss motor type omp-omr and provides a maximum safety, very low pressure drops and solid installation

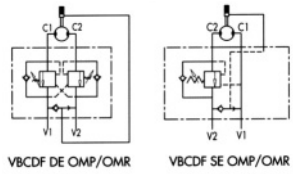

VBCDF DE OMP/OMR VBCDF SE OMP/OMR

CODE	TYPE	PILOT RATIO	MAX FLOW L/MIN	MAX PRESSURE BAR	PRICE
V0415	VBCDF 1/2" SE OMP-OMR	1:4,5	50	350	£100.30
V0425	VBCDF 1/2" DE OMP-OMR	1:4,5	50	350	£167.20
V0415/SF	VBCDF 1/2" SE OMP-OMR SF/ BRAKE UNCLAPING	1:4,5	50	350	£90.73
V0425/SF	VBCDF 1/2" DE OMP-OMR SF/ BRAKE UNCLAPING	1:4,5	50	350	£178.05
NB. BRAKE UNCLAPING MEANS " A MECHANICAL FAIL SAFE BRAKE "					

OVERCENTRE VALVES FLANGEABLE ON DANFOSS MOTORS OMS

Direct flange is ideal for Danfoss motors type oms and provides a maximum safety, very low pressure drops and solid installation

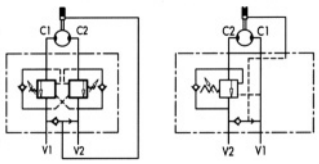

VBCDF DE OMS VBCDF SE OMS

CODE	TYPE	PILOT RATIO	MAX FLOW L/MIN	MAX PRESSURE BAR	PRICE
V0416	VBCDF 1/2" SE OMS	1:4,5	50	350	£97.18
V0426	VBCDF 1/2" DE OMS	1:4,5	50	350	£164.87
V0416/SF	VBCDF 1/2" SE OMS /SF BRAKE UNCLAPING	1:8	50	350	£105.88
V0426/SF	VBCDF 1/2" DE OMS SF/ BRAKE UNCLAPING	1:8	50	350	£178.04
NB. BRAKE UNCLAPING MEANS " A MECHANICAL FAIL SAFE BRAKE "					

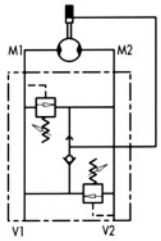

DUAL CROSS RELIEF VALVE FLANGEABLE ON DANFOSS MOTORS OMS-OMP/OMR-OMT

USE AND OPERATION

Made up by 2 relief valves with crossed tank, this valve is used to block pressure to a certain setting in the 2 ports of an actuator/hydraulic motor. It's ideal to provide protection against sudden shock pressures and to adjust different pressures in the 2 ports of an hydraulic circuit as well. Direct flange is ideal for Danfoss motors type OMS, OMP/OMR and OMT and provides a maximum safety, very low pressure drops and solid installation.

Body: Zinc-plated steel **Internal parts**: Hardened and ground steel, **Seals**: Buna N standard, **Poppet type**: minor leakage

Applications: Flange M1 and M2 directly to the motor and connect V1 and V2 to pressure flow.

ON REQUEST: DIFFERENT SETTING RANGE AVAILABLE (SEE TABLE BELOW) OTHER SETTINGS AVAILABLE (CODE/T: PLEASE SPECIFY THE DESIRED SETTING). SINGLE ACTING WITH JUST 1 RELIEF AVAILABLE (CODE/ SE). BRAKE UNCLAPING (CODE/ SF)

CODE	TYPE	MAX FLOW L/MIN	MAX PRESSURE BAR	PRICE
V0490	VAU 1/2" OMS	50	300	£75.14
V0500	VAU 1/2" OMP/OMR	60	300	£76.87
V0505	VAU 3/4" OMT	100	300	£91.98
V0490/SE	VAU 1/2" OMS SE/ SINGLE ACTING	50	300	£72.65
V0500/SE	VAU 1/2" OMP/OMR SE/SINGLE ACTING	60	300	£75.02
V0505/SE	VAU 3/4" OMT SE/SINGLE ACTING	100	300	£89.89
V0490/T	VAU 1/2" OMS PRESSURE PRESET	50	300	£78.97
V0500/T	VAU 1/2" OMP/OMR PRESSURE PRESET	60	300	£80.73
V0505/T	VAU 3/4" OMT PRESSURE PRESET	100	300	£95.61
V0490/V	VAU 1/2" OMS HANDKNOB	50	300	£82.67
V0500/V	VAU 1/2" OMP/OMR HANDKNOB	60	300	£84.43
V0505/V	VAU 3/4" OMT HANDKNOB	100	300	£82.02
V0490/P	VAU 1/2" OMS SEALING CAP	50	300	£84.61
V0500/P	VAU 1/2" OMP/OMR SEALING CAP	60	300	£86.33
V0505/P	VAU 3/4" OMT SEALING CAP	100	300	£101.20
V0490/SF	VAU 1/2" OMS SF/ BRAKE UNCLAPING	50	300	£84.31
V0500/SF	VAU 1/2" OMP/OMR SF/ BRAKE UNCLAPING	60	300	£86.01
V0505/SF	VAU 3/4" OMT SF/ BRAKE UNCLAPING	100	300	£100.94
NB. BRACE UNCLAPING MEANS " A MECHANICAL FAIL SAFE BRAKE "				

SPRINGS

SETTING RANGE BAR	PRESSURE INCREASE (BAR/TURN)	STANDARD SETTING BAR
10 - 50*	7	30
20 - 100	12	75
10 - 180 (Standard)	30	90
50 - 250	45	130
80 - 300	50	150
* = For setting less than 70 Bar Q = 12 l/m		

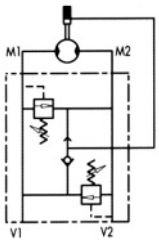

DUAL CROSS RELIEF VALVE FLANGEABLE ON SAMHYDRAULIK MOTORS AG - AR

USE AND OPERATION

Made up by 2 relief valves with crossed tank, this valve is used to block pressure to a certain setting in the 2 ports of an actuator/hydraulic motor. It's ideal to provide protection against sudden shock pressures and to adjust different pressures in the 2 ports of an hydraulic circuit as well. Direct flange is ideal for Samhydraulic motors type AG - AR and provides a maximum safety, very low pressure drops and solid installation.

Body: Zinc-plated steel **Internal parts**: Hardened and ground steel, **Seals**: Buna N standard, **Poppet type**: minor leakage

Applications: Flange M1 and M2 directly to the motor and connect V1 and V2 to pressure flow.

ON REQUEST: DIFFERENT SETTING RANGE AVAILABLE (SEE TABLE BELOW) OTHER SETTINGS AVAILABLE (CODE/T: PLEASE SPECIFY THE DESIRED SETTING). BRAKE UNCLAPING (CODE/ SF)

CODE	TYPE	MAX FLOW L/MIN	MAX PRESSURE BAR	PRICE
V0455	VAU 1/" AG - AR	60	300	£78.44
V0455/T	VAU 1/" AG - AR PRESSURE PRESET	60	300	£82.00
V0455/V	VAU 1/" AG - AR HANDKNOB	60	300	£85.65
V0455/P	VAU 1/" AG - AR SEALING CAP	60	300	£87.47
V0455/SF	VAU 1/" AG - AR SF/ BRAKE UNCLAPING	60	300	£87.47
BRACE UNCLAPING MEANS " A MECHANICAL FAIL SAFE BRAKE "				

SPRINGS

SETTING RANGE BAR	PRESSURE INCREASE (BAR/TURN)	STANDARD SETTING BAR
10 - 50*	7	30
20 - 100	12	75
10 - 180 (Standard)	30	90
50 - 250	45	130
80 - 300	50	150
* = For setting less than 70 Bar Q = 12 l/m		

50% OFF ALL PRICES

GEAR MOTORS

FEATURES 210
TECHNICAL INFORMATION.....210
MOTORS GROUP 2 • STANDARD 211
MOTORS GROUP 2 • SAE A, SAE A-OR 212
MOTORS GROUP 2 • B80C, B50C 213
MOTORS GROUP 2 • E52C.....214
MOTORS GROUP 2 • SUPP.STND 215
MOTORS GROUP 2 • OPTIONAL.....216
MOTORS GROUP 2 • AVAILABLE SHAFTS 218
MOTORS GROUP 2 • CONNECTIONS FOR D-S MOTORS.....219
MOTORS GROUP 2 • CONNECTIONS FOR R MOTORS 220
MOTORS GROUP 3 • STANDARD 221
MOTORS GROUP 3 • SAE B, SAE B-OR 222
MOTORS GROUP 3 • OPTIONAL.....223
MOTORS GROUP 3 • AVAILABLE SHAFTS 224
MOTORS GROUP 3 • CONNECTIONS FOR R MOTORS 225
GROUP 1 GEAR PUMPS + GEAR MOTORS PRICE LIST.....226
GROUP 2 GEAR PUMPS + GEAR MOTORS PRICE LIST.....226
GROUP 3 GEAR PUMPS + GEAR MOTORS PRICE LIST.....226

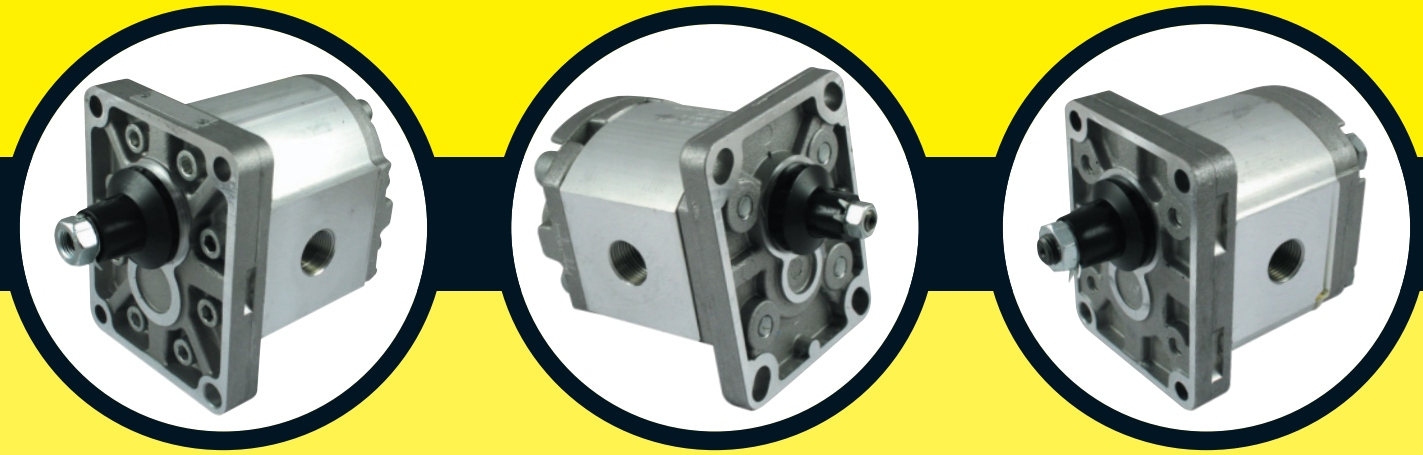

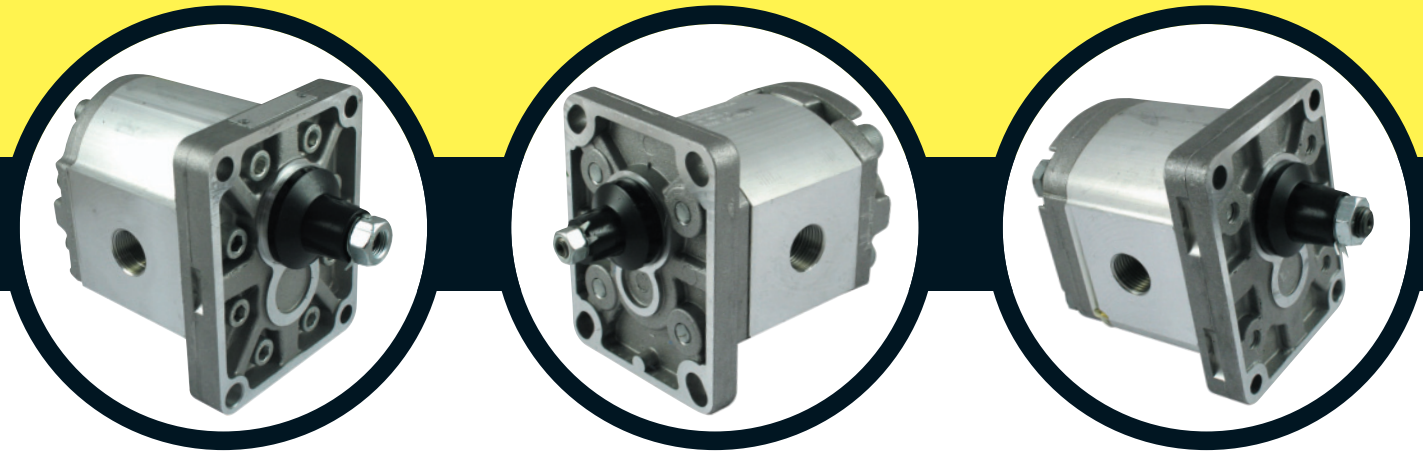

Galtech s.p.a
OLEODINAMICA
Gruppo Gallinari

FEATURES

Motors with external gears from group 2 to group 3, divided into 17 displacements from 4 to 61,1cc, up to 270 bar of max working pressure and maximum speed up to 4000 rpm, with hidrostatic balance to reduce the axial slack.
Gear motors are available in unidirectional and reversible versions (reversible motors can be used same in serie circuit).
Each motor can be assembled with standard flanges (European, German or SAE) or with special ones (ZF, Perkins and Renault), with conic, cylindrical or splined shaft. Furthermore it is possible to assemble covers with two speed function and with pressure relief valve.

The motors are available in unidirectional D - S and reversible R version.

Unidirectional motor (D-S)

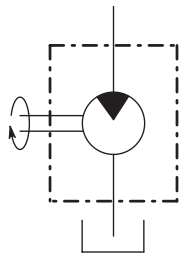

Reversible motor (R)

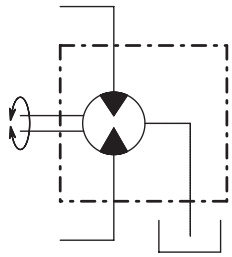

USE CONDITIONS

- *Temperature 20°C ÷ 65°C*
- *Max. temperature - 15 °C ÷ 80°C*
- *Suction allowed pressure min. 0.7 max. 3 bar (absolute)*
- *Recommended viscosity 15 ÷ 92 mm² /s*
- *Start max. viscosity 3000 mm² /s*
- *Filtering 26/23 150 ISO DIS 4406 until 2175 psi 23/20 ISO DIS 4406 for higher pressure*

TECHNICAL INFORMATION

The motors can be subjected to the pressures P1, P2 indicated in the performance tables. The following diagram illustrates the definitions and applicability of these, compared to the rotation speed limits included.

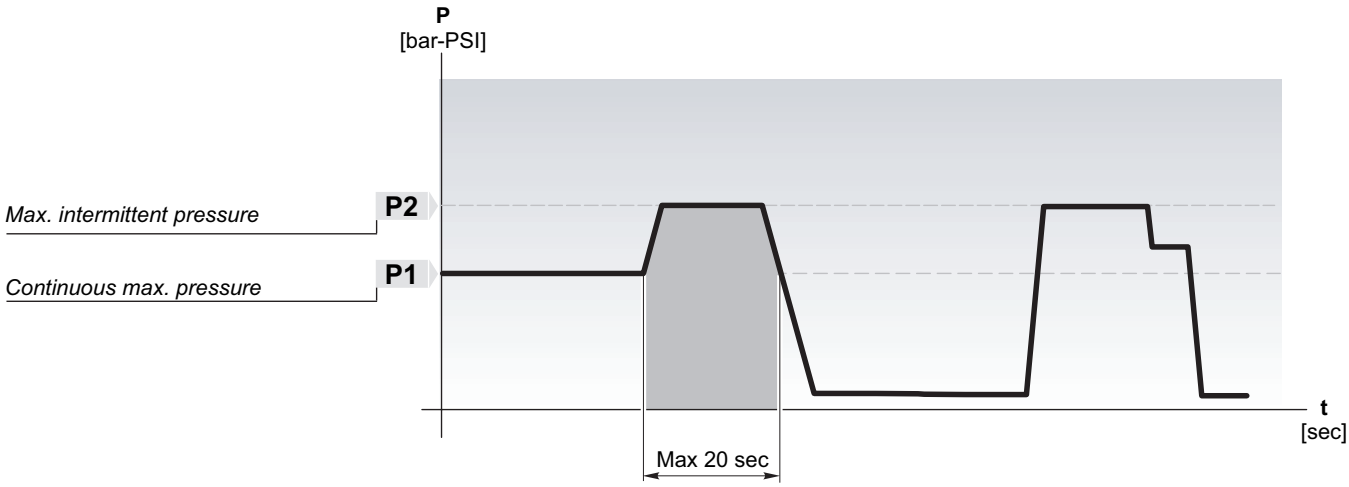

Hydraulic measures

Q	*Flow*	[l/min - *Gal/min*]
M	*Torque*	[Nm - *lbf.in*]
P	*Power*	[kW - *HP*]
V	*Displacement*	[cm^3/rev - *in^3/rev*]
N	*Speed*	[min^{-1} - *rpm*]
Δp	*Pressure*	[bar - *PSI*]
η_v	*Volumetric efficiency*	
η_m	*Mechanical efficiency*	
η_t	*Overall efficiency*	

Useful formulas

$$\mathbf{Q} = \frac{V\ [cm^3/rev] \times n \times n \times 10^3}{\eta_v}\ l/min$$

$$\mathbf{M} = \frac{\Delta p\ [bar] \times V\ [cm^3 rev] \times \eta_m}{62.83}\ Nm$$

$$\mathbf{P} = \frac{\Delta p\ [bar] \times V\ [cm^3 rev] \times n \times \eta_t}{600 \times 1000}\ kW$$

Conversion factors

1 l/min = 0.2641 US Gal/min
1 Nm = 8.851 in·lbs
1 Nm = 0.7375 ft·lbs
1 N = 0.2248 lbs
1kW = 1.34 HP
1cm^3/giro = 0.061 in^3/rev
1 bar = 14.5 PSI
1 mm = 0.0394 in
1 kg = 2.205 lbs

50% OFF ALL PRICES

Flange and cover in Aluminium

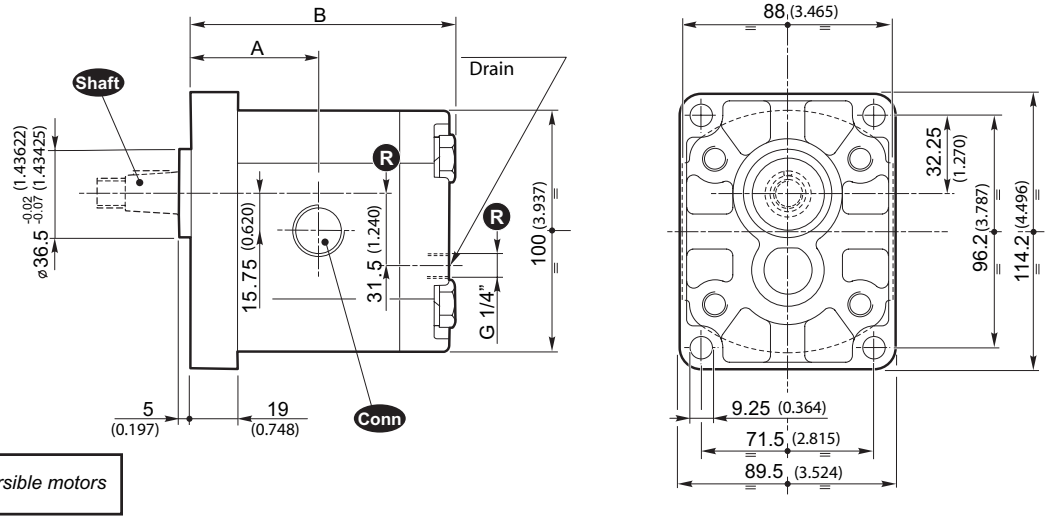

R *Only for reversible motors*

Flange and cover in Cast iron

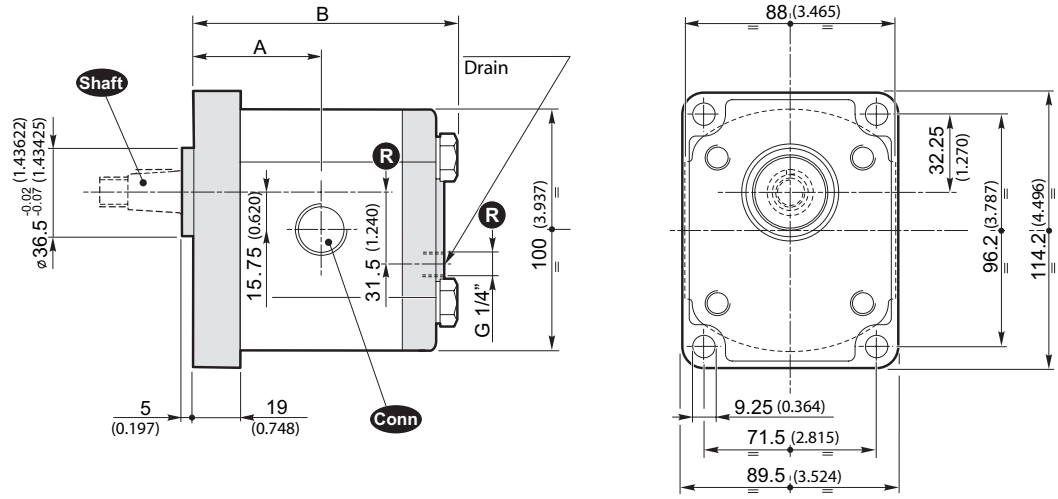

		STND *(Aluminium)*					STND *(Cast iron)*				
Size	*Displacement* [cm³/rev] *(in³/rev)*	*Dimensions* A [mm] *(inch)*	B [mm] *(inch)*	*Mass* [Kg] *(lbs)*	Shaft	Conn	*Dimensions* A [mm] *(inch)*	B [mm] *(inch)*	*Mass* [Kg] *(lbs)*	Shaft	Conn
2SM _4	**4** *(0.24)*	44.4 *(1.748)*	93 *(3.661)*	2.30 *(5.1)*			44.4 *(1.748)*	93 *(3.661)*	3.40 *(7.5)*		
2SM _6	**6** *(0.37)*	46 *(1.811)*	96.3 *(3.791)*	2.45 *(5.4)*			46 *(1.811)*	96.3 *(3.791)*	3.60 *(7.8)*		
2SM _8	**8.5** *(0.52)*	48.1 *(1.894)*	100.5 *(3.957)*	2.60 *(5.7)*	10	G	48.1 *(1.894)*	100.5 *(3.957)*	3.70 *(8.2)*	10	G
2SM _11	**11** *(0.67)*	50.2 *(1.976)*	104.6 *(4.118)*	2.70 *(6.0)*	11 12 13	N T M	50.2 *(1.976)*	104.6 *(4.118)*	3.80 *(8.4)*	11 12 13	N T M
2SM _14	**14** *(0.85)*	52.7 *(2.075)*	109.6 *(4.315)*	2.80 *(6.2)*	14 15	U W	52.7 *(2.075)*	109.6 *(4.315)*	3.90 *(8.6)*	14 15	U W
2SM _16	**16.5** *(1.01)*	54.8 *(2.157)*	113.8 *(4.480)*	2.95 *(6.5)*	16	F	54.8 *(2.157)*	113.8 *(4.480)*	4.05 *(8.9)*	16	F
2SM _19	**19.5** *(1.19)*	57.3 *(2.256)*	118.8 *(4.677)*	3.10 *(6.8)*			57.3 *(2.256)*	118.8 *(4.677)*	4.20 *(9.3)*		
2SM _22	**22.5** *(1.37)*	59.8 *(2.354)*	123.8 *(4.874)*	3.25 *(7.2)*			59.8 *(2.354)*	123.8 *(4.874)*	4.35 *(9.6)*		
2SM _26	**26** *(1.59)*	62.7 *(2.469)*	129.6 *(5.102)*	3.40 *(7.5)*			62.7 *(2.469)*	129.6 *(5.102)*	4.50 *(9.9)*		

SEE PAGES 219/220 FOR PORT SIZES AVAILABLE

SEE PAGE 226 FOR PRICES

SAE A-OR

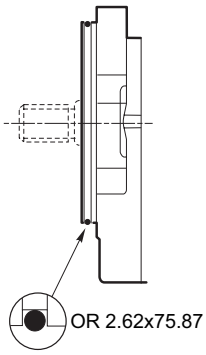

Ⓡ *Only for reversible motors*

SAE A

Flange and cover in Aluminium

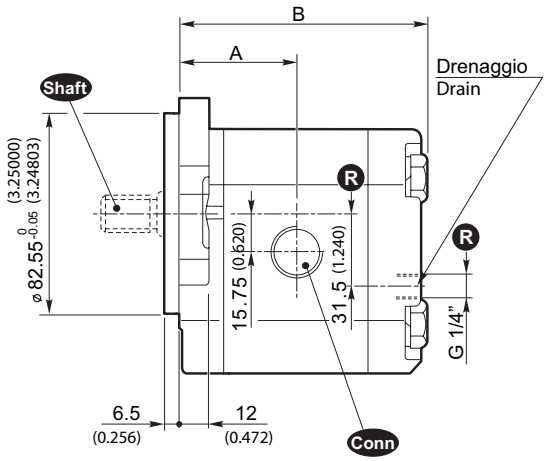

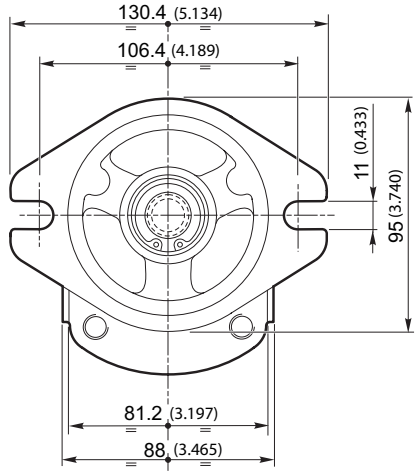

SAE A-OR

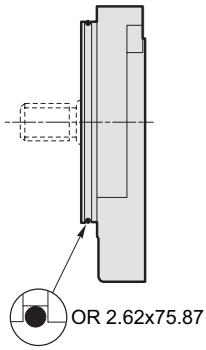

SAE A

Flange and cover in Cast iron

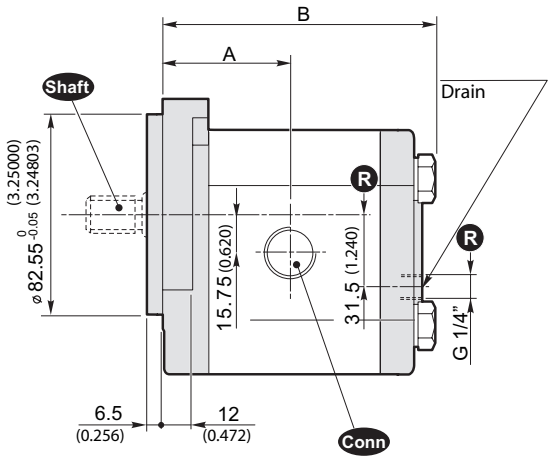

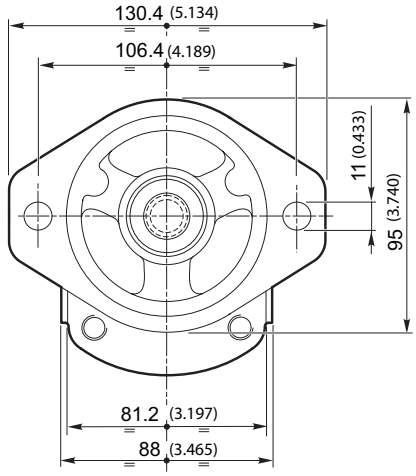

SAE A, SAE A-OR *(Aluminium)*

SAE A, SAE A-OR *(Cast iron)*

Size	Displacement [cm³/rev] (in³/rev)	Dimensions A [mm] (inch)	Dimensions B [mm] (inch)	Mass [Kg] (lbs)	Shaft	Conn	Dimensions A [mm] (inch)	Dimensions B [mm] (inch)	Mass [Kg] (lbs)	Shaft	Conn
2SM _4	**4** (0.24)	44.4 (1.748)	93 (3.661)	2.30 (5.1)			44.4 (1.748)	93 (3.661)	3.40 (7.5)		
2SM _6	**6** (0.37)	46 (1.811)	96.3 (3.791)	2.45 (5.4)			46 (1.811)	96.3 (3.791)	3.55 (7.8)		
2SM _8	**8.5** (0.52)	48.1 (1.894)	100.5 (3.957)	2.60 (5.7)	10 11	G N	48.1 (1.894)	100.5 (3.957)	3.70 (8.2)	10 11	G N
2SM _11	**11** (0.67)	50.2 (1.976)	104.6 (4.118)	2.70 (6.0)	12 13	T M	50.2 (1.976)	104.6 (4.118)	3.80 (8.4)	12 13	T M
2SM _14	**14** (0.85)	52.7 (2.075)	109.6 (4.315)	2.80 (6.2)	14 15	U W	52.7 (2.075)	109.6 (4.315)	3.90 (8.6)	14 15	U W
2SM _16	**16.5** (1.01)	54.8 (2.157)	113.8 (4.480)	2.95 (6.5)	16	F	54.8 (2.157)	113.8 (4.480)	4.05 (8.9)	16	F
2SM _19	**19.5** (1.19)	57.3 (2.256)	118.8 (4.677)	3.10 (6.8)			57.3 (2.256)	118.8 (4.677)	4.20 (9.3)		
2SM _22	**22.5** (1.37)	59.8) (2.354)	123.8 (4.874)	3.25 (7.2)			59.8 (2.354)	123.8 (4.874)	4.35 (9.6)		
2SM _26	**26** (1.59)	62.7 (2.469)	129.6 (5.102)	3.40 (7.5)			62.7 (2.469)	129.6 (5.102)	4.50 (9.9)		

SEE PAGES 219/220 FOR PORT SIZES AVAILABLE

SEE PAGE 226 FOR PRICES

B80C

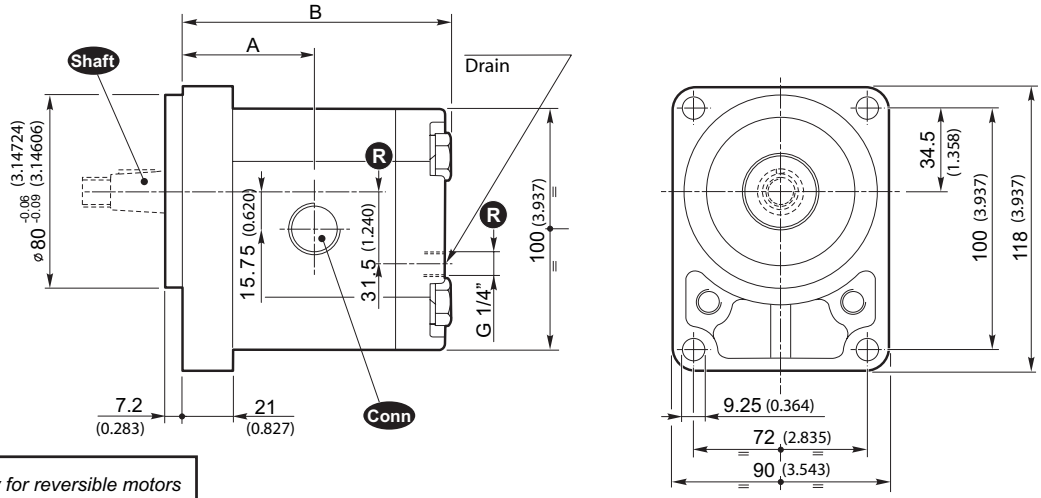

R *Only for reversible motors*

B50C

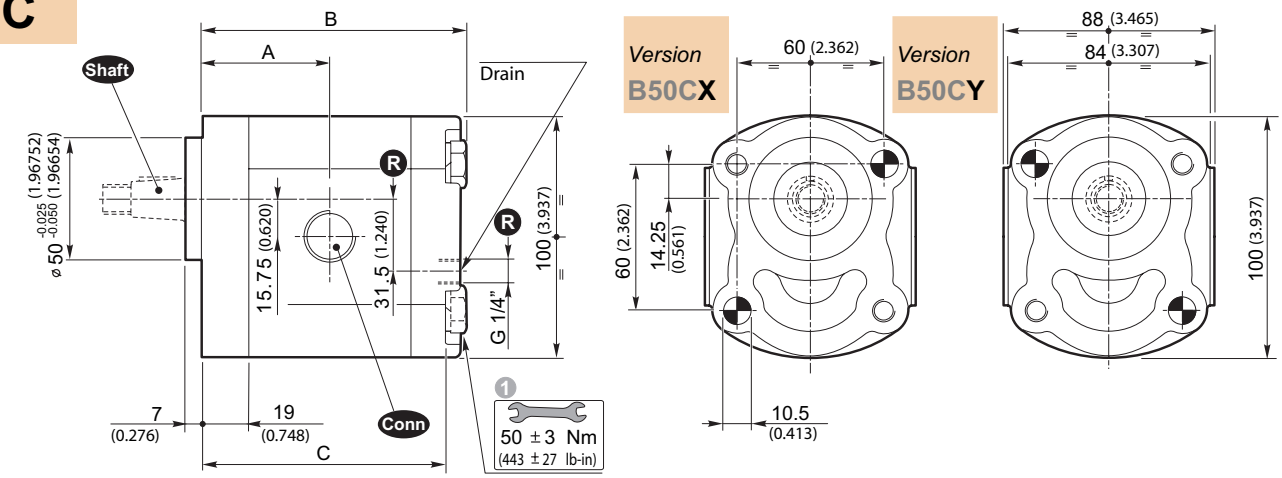

1 *Tightening torque of screws: 443 ± 27 lb·in. Use screws type 10.9 - 12.9 UNI EN 20898/1.*
The assembling of the pump should be effected with 2 screw studs type 10.9 - 12.9 pre-tighten at 354 ± 27 lb·in.
Fix the pump by self-locking nuts with tightening torque 443 ± 27 lb·in.

The screws kit for the pump assembling should be ordered separately.
Ordering code of fixing Kit:

0029W *+ Length L (see table)*

SEE PAGES 219/220 FOR PORT SIZES AVAILABLE

		B80C					B50C						
Size	Displacement [cm³/rev] (in³/rev)	Dimensions A [mm] (inch)	Dimensions B [mm] (inch)	Mass [Kg] (lbs)	Shaft	Conn	Dimensions A [mm] (inch)	Dimensions B [mm] (inch)	Dimensions C [mm] (inch)	Dimensions L 1 [mm] (inch)	Mass [Kg] (lbs)	Shaft	Conn
2SM A4	**4** (0.24)	46.4 (1.827)	95 (3.740)	2.30 (5.1)			44.4 (1.748)	93 (3.661)	84 (3.307)	105 (4.134)	2.30 (5.1)		
2SM A6	**6** (0.37)	48 (1.890)	98.3 (3.870)	2.45 (5.4)			46 (1.811)	96.3 (3.791)	87.3 (3.437)	105 (4.134)	2.45 (5.4)		
2SM A8	**8.5** (0.52)	50.1 (1.972)	102.5 (4.035)	2.60 (5.7)	10 11 12 13 14 15 16	G N T M U W F	48.1 (1.894)	100.5 (3.957)	91.5 (3.602)	110 (4.331)	2.60 (5.7)	10 11 12 13 14 15 16	G N T M U W F
2SM A11	**11** (0.67)	52.2 (2.055)	106.6 (4.197)	2.70 (6.0)			50.2 (1.976)	104.6 (4.118)	95.6 (3.764)	115 (4.528)	2.70 (6.0)		
2SM A14	**14** (0.85)	54.7 (2.154)	111.6 (4.394)	2.80 (6.2)			52.7 (2.075)	109.6 (4.315)	100.6 (3.961)	120 (4.724)	2.80 (6.2)		
2SM A16	**16.5** (1.01)	56.8 (2.236)	115.8 (4.559)	2.95 (6.5)			54.8 (2.157)	113.8 (4.480)	104.8 (4.126)	125 (4.921)	2.95 (6.5)		
2SM A19	**19.5** (1.19)	59.3 (2.335)	120.8 (4.756)	3.10 (6.8)			57.3 (2.256)	118.8 (4.677)	109.8 (4.323)	130 (5.118)	3.10 (6.8)		
2SM A22	**22.5** (1.37)	61.8 (2.433)	125.8 (4.953)	3.25 (7.2)			59.8 (2.354)	123.8 (4.874)	114.8 (4.520)	135 (5.315)	3.25 (7.2)		
2SM A26	**26** (1.59)	64.7 (2.547)	131.6 (5.181)	3.40 (7.5)			62.7 (2.469)	129.6 (5.102)	120.6 (4.748)	140 (5.512)	3.40 (7.5)		

SEE PAGE 226 FOR PRICES

E52C

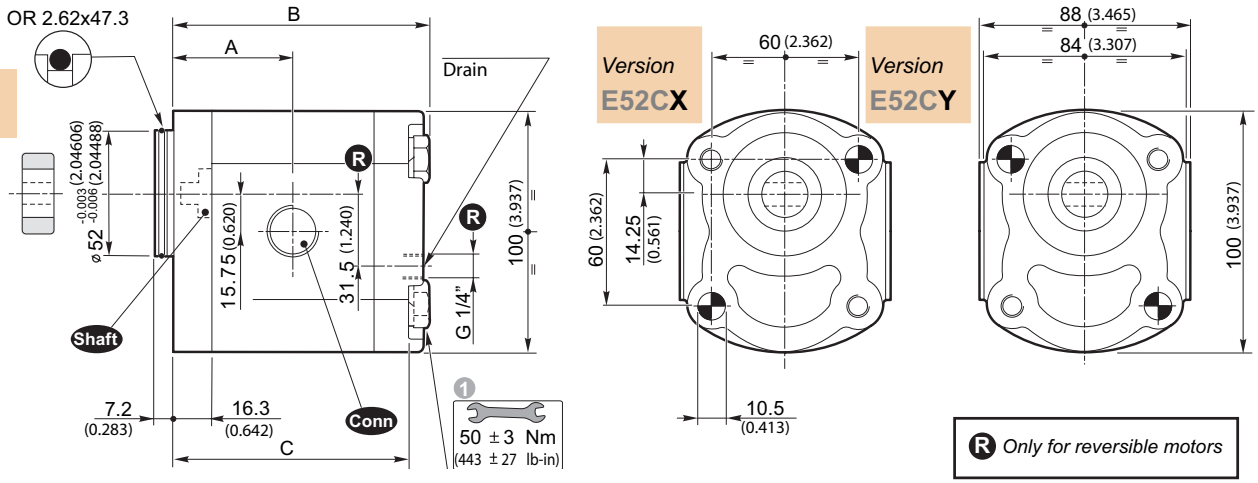

1 *Tightening torque of screws: 443 ± 27 lb·in. Use screws type 10.9 - 12.9 UNI EN 20898/1.*
The assembling of the pump should be effected with 2 screw studs type 10.9 - 12.9 pre-tighten at 354 ± 27 lb·in.
Fix the pump by self-locking nuts with tightening torque 443 ± 27 lb·in.

The screws kit for the fixing of the pump should be ordered separately.
Ordering code of fixing Kit:

0029W *+ Length L (see table)*

E52C

Size	Displacement [cm³/rev] (in³/rev)	Dimensions A [mm] (inch)	B [mm] (inch)	C [mm] (inch)	L 1 [mm] (inch)	Mass [Kg] (lbs)	Shaft	Conn
2SM A4	**4** (0.24)	41.7 (1.642)	90.3 (3.555)	81.3 (3.201)	100 (3.937)	2.30 (5.1)	17	G N T M U W F
2SM A6	**6** (0.37)	43.3 (1.705)	93.6 (3.685	84.6 (3.331)	105 (4.134)	2.45 (5.4)		
2SM A8	**8.5** (0.52)	45.4 (1.787)	97.8 (3.850	88.8 (3.496)	110 (4.331)	2.60 (5.7)		
2SM A11	**11** (0.67)	47.5 (1.870)	101.9 (4.012	92.9 (3.657)	115 (4.528)	2.70 (6.0)		
2SM A14	**14** (0.85)	50 (1.969)	106.9 (4.209	97.9 (3.854)	120 (4.724)	2.80 (6.2)		
2SM A16	**16.5** (1.01)	52.1 (2.051)	111.1 (4.374	102.1 (4.020)	120 (4.724)	2.95 (6.5)		
2SM A19	**19.5** (1.19)	54.6 (2.150)	116.1 (4.571	107.1 (4.217)	125 (4.921)	3.10 (6.8)		
2SM A22	**22.5** (1.37)	57.1 (2.248)	121.1 (4.768	112.1 (4.413)	130 (5.118)	3.25 (7.2)		
2SM A26	**26** (1.59)	60 (2.362)	126.9 (4.996	117.9 (4.642)	140 (5.512)	3.40 (7.5)		

SEE PAGES 219/220 FOR PORT SIZES AVAILABLE

SEE PAGE 226 FOR PRICES

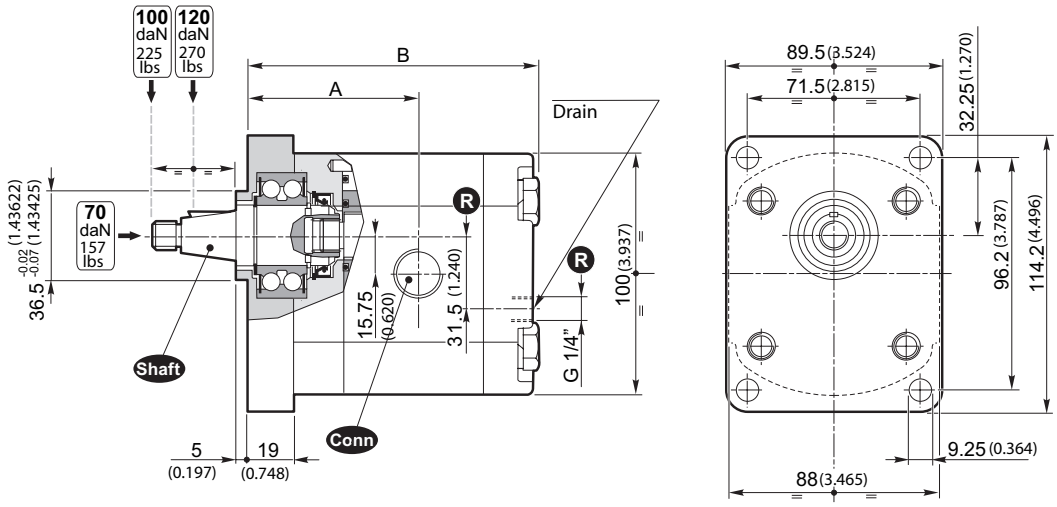

R *Only for reversible motors*

Version to use with axial and/or radial loads

SUPP.STND

Size	*Displacement* [cm³/rev] *(in³/rev)*	*Dimensions* A [mm] *(inch)*	B [mm] *(inch)*	*Mass* [Kg] *(lbs)*	Shaft	Conn
2SM A4	4 *(0.24)*	64.4 *(2.535)*	113 *(4.449)*	2.80 *(6.2)*	10	G N T M U W F
2SM A6	6 *(0.37)*	66 *(2.598)*	116.3 *(4.579)*	2.88 *(6.4)*		
2SM A8	8.5 *(0.52)*	68.1 *(2.681)*	120.5 *(4.744)*	3.00 *(6.6)*		
2SM A11	11 *(0.67)*	70.2 *(2.764)*	124.6 *(4.906)*	3.12 *(6.9)*		
2SM A14	14 *(0.85)*	72.7 *(2.862)*	129.6 *(5.102)*	3.27 *(7.2)*		
2SM A16	16.5 *(1.01)*	74.8 *(2.945)*	133.8 *(5.268)*	3.39 *(7.5)*		
2SM A19	19.5 *(1.19)*	77.3 *(3.043)*	138.8 *(5.465)*	3.53 *(7.8)*		
2SM A22	22.5 *(1.37)*	79.8 *(3.142)*	143.8 *(5.661)*	3.67 *(8.1)*		
2SM A26	26 *(1.59)*	82.7 *(3.256)*	149.6 *(5.890)*	3.84 *(8.5)*		

SEE PAGES 219/220 FOR PORT SIZES AVAILABLE

SEE PAGE 226 FOR PRICES

VLP- I (N)

Pressure relief valve with internal exhaust

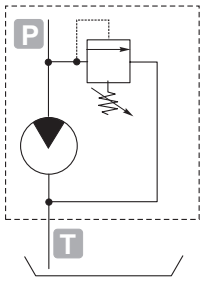

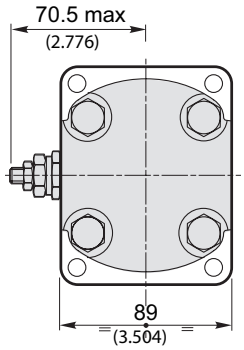

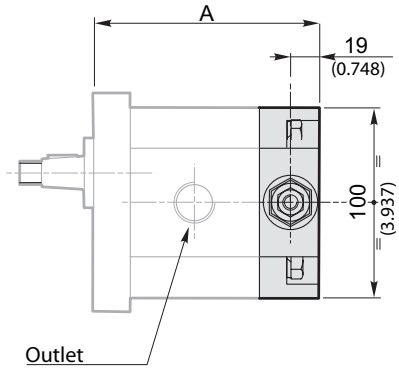

	A		
	Standard SAE A B50C	B80C	E52C
2SM A4	104.8 *(4.126)*	106.8 *(4.205)*	102.1 *(4.020)*
2SM A6	108.1 *(4.256)*	110.1 *(4.335)*	105.4 *(4.150)*
2SM A8	112.3 *(4.421)*	114.3 *(4.500)*	109.6 *(4.315)*
2SM A11	116.4 *(4.583)*	118.4 *(4.661)*	113.7 *(4.476)*
2SM A14	121.4 *(4.780)*	123.4 *(4.858)*	118.7 *(4.673)*
2SM A16	125.6 *(4.945)*	127.6 *(5.024)*	122.9 *(4.839)*
2SM A19	130.6 *(5.142)*	132.6 *(5.220)*	127.9 *(5.035)*
2SM A22	135.6 *(5.339)*	137.6 *(5.417)*	132.9 *(5.232)*
2SM A26	141.4 *(5.567)*	143.4 *(5.646)*	138.7 *(5.461)*

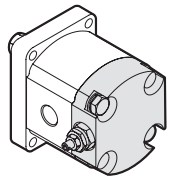

VLP- E (N)

Pressure relief valve with external exhaust

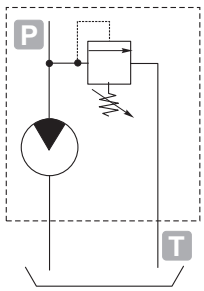

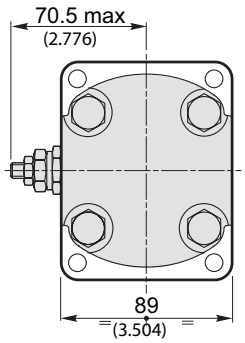

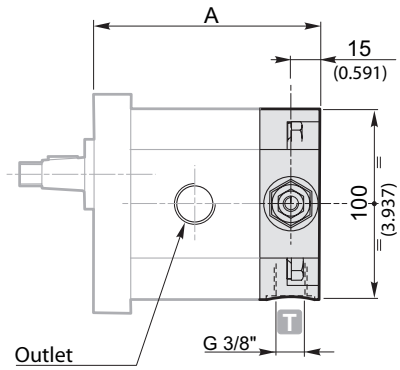

	A		
	Standard SAE A B50C	B80C	E52C
2SM A4	100.8 *(3.969)*	102.8 *(4.047)*	98.1 *(3.862)*
2SM A6	104.1 *(4.098)*	106.1 *(4.177)*	101.4 *(3.992)*
2SM A8	108.3 *(4.264)*	110.3 *(4.343)*	105.6 *(4.157)*
2SM A11	112.4 *(4.425)*	114.4 *(4.504)*	109.7 *(4.319)*
2SM A14	117.4 *(4.622)*	119.4 *(4.701)*	114.7 *(4.516)*
2SM A16	121.6 *(4.787)*	123.6 *(4.866)*	118.9 *(4.681)*
2SM A19	126.6 *(4.984)*	128.6 *(5.063)*	123.9 *(4.878)*
2SM A22	131.6 *(5.181)*	133.6 *(5.260)*	128.9 *(5.075)*
2SM A26	137.4 *(5.409)*	139.4 *(5.488)*	134.7 *(5.303)*

Warning.
The pressure relief valve can be applied by substituting the rear cover.
It is supplied only with aluminium flange and cover.
The showed motors are clockwise rotation.

The opening of the pressure relief valve should be carry out for times not over 10" each minute to avoid the overheating of the pump.

SEE PAGES 219/220 FOR PORT SIZES AVAILABLE

Example of ordering code

2SM	A	14	D	SAE A	-	10	G	(VT)	VLP-I	(N)

VLP-I	*Cover with VLP*	**VPL-I** *(at internal exhaust)* **VLP-E** *(at external exhaust)*
(N)	*Spring type*	**B - N - R** *(See table)*

		Spring type B	N	R
		white spring	*black spring*	*red spring*
*Calibration fields**	[bar] *(psi)*	10 ÷ 100 *(145 ÷ 1450)*	30 ÷ 280 *(435 ÷ 4060)*	80 ÷ 380 *(1160 ÷ 5510)*

**** Without setting request, it will be considered standard (black spring: 2175 psi).***

SEE PAGE 226 FOR PRICES

50% OFF ALL PRICES

Two speed unidirectional motors with VLP pressure relief valve

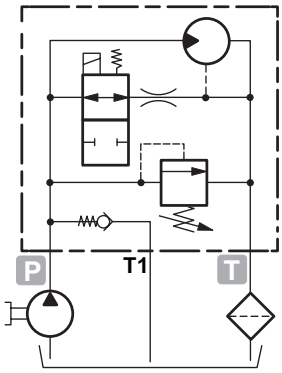

Electro Valve normally open (NA)

Configuration for clockwise rotation

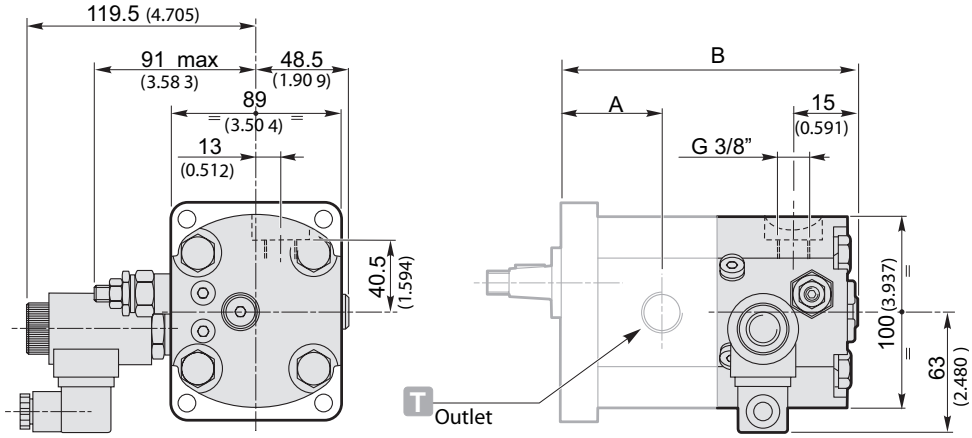

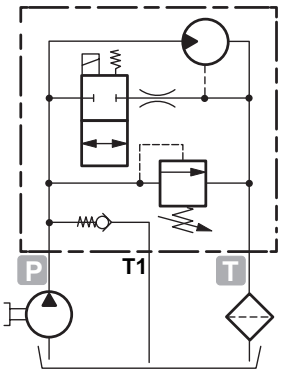

Electro Valve normally closed (NC)

Configuration for anticlockwise rotation

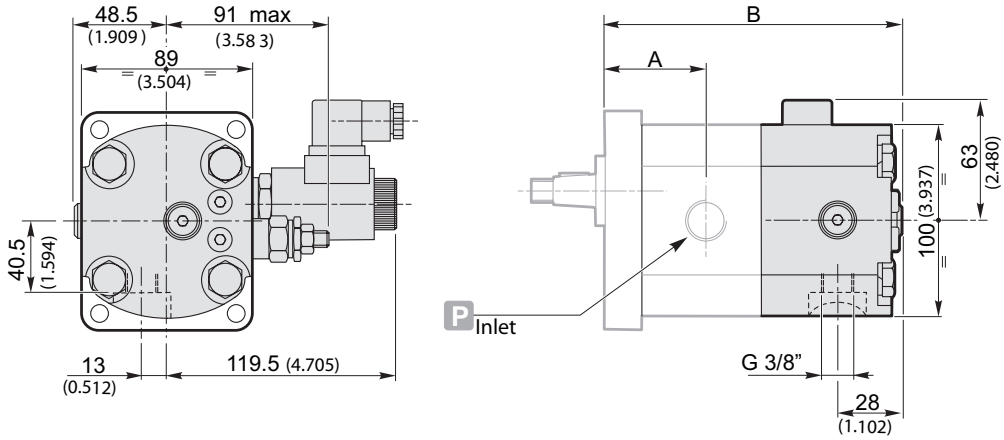

	2SM A4	2SM A6	2SM A8	2SM A11	2SM A14	2SM A16	2SM A19	2SM A22	2SM A26
A	44.4 *(1.748)*	46 *(1.811)*	48.1 *(1.894)*	50.2 *(1.976)*	52.7 *(2.075)*	54.8 *(2.157)*	57.3 *(2.256)*	59.8 *(2.354)*	62.7 *(2.469)*
B	142.3 *(5.602)*	145.6 *(5.732)*	149.8 *(5.898)*	153.9 *(6.059)*	158.9 *(6.256)*	163.1 *(6.421)*	168.1 *(6.618)*	173.1 *(6.815)*	182 *(7.165)*

Example of ordering code

2SM	A14	D	NA	(24VDC)	VLP	(N)	SAE A	-	10	G

NA	**NA** = Normally open **NC** = Normally closed	**NA** = Normally open **NC** = Normally closed
24VDC	*Electromagnet voltage*	**12 - 24 - 48 V. DC** **24 - 48 - 110 - 220 V. AC (50 Hz)**
VLP	*Cover with VLP*	
(N)	*Spring type*	**B - N - R** *(See table)*

N.B.
Only motors with flange and cover in Aluminium

		Spring type B	N	R
		white spring	*black spring*	*red spring*
*Calibration fields**	[bar] *(psi)*	10 ÷ 100 *(145 ÷ 1450)*	30 ÷ 280 *(435 ÷ 4060)*	80 ÷ 380 *(1160 ÷ 5510)*

SEE PAGES 219/220 FOR PORT SIZES AVAILABLE

**** Without setting request, it will be considered standard (black spring: 2175 psi).***

SEE PAGE 226 FOR PRICES

Type **10**

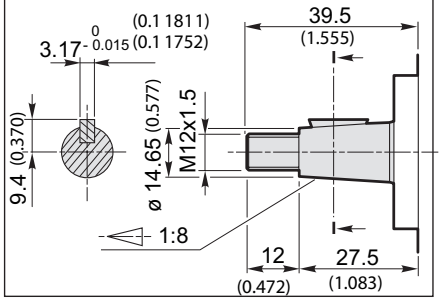

Torque **98 Nm** / *Torque* ***72.3 ft·lbs***

Type **11**

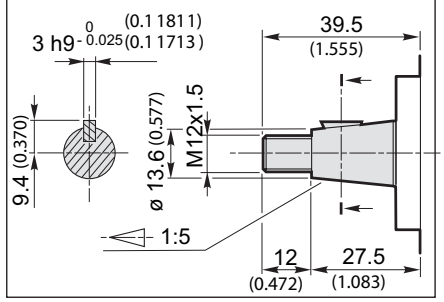

Torque **98 Nm** / *Torque* ***72.3 ft·lbs***

Type **12**

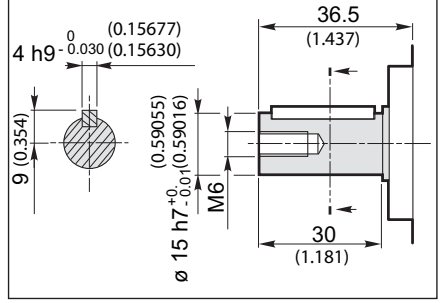

Torque **98 Nm** / *Torque* ***72.3 ft·lbs***

Type **13**

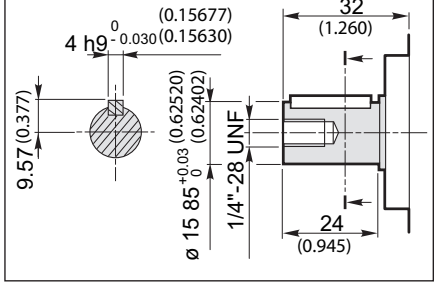

Torque **98 Nm** / *Torque* ***72.3 ft·lbs***

Type **14**

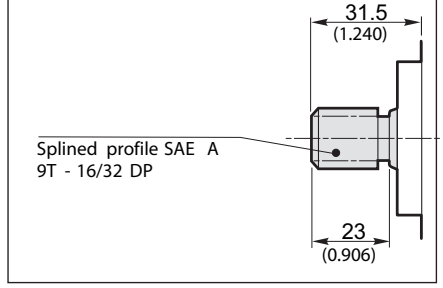

Torque **98 Nm** / *Torque* ***72.3 ft·lbs***

Type **15**

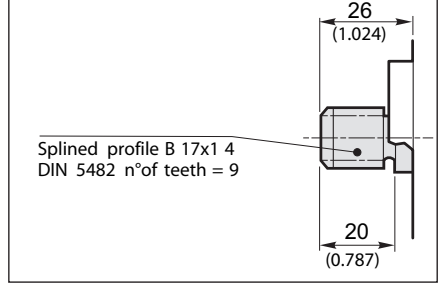

Torque **98 Nm** / *Torque* ***72.3 ft·lbs***

Type **16**

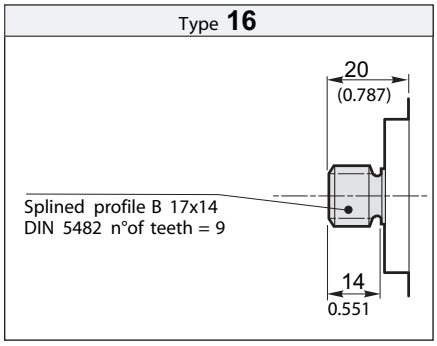

Torque **98 Nm** / *Torque* ***72.3 ft·lbs***

Type **17**

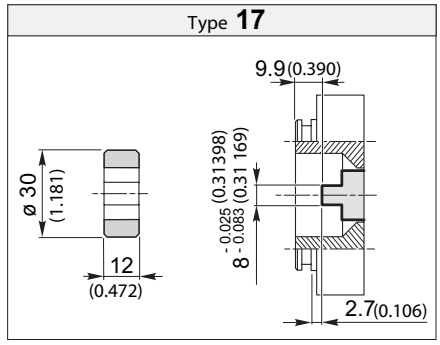

Torque **70 Nm** / *Torque* ***51.6 ft·lbs***

SEE PAGE 226 FOR PRICES

MOTORS GROUP 2 • CONNECTIONS FOR D-S MOTORS

G

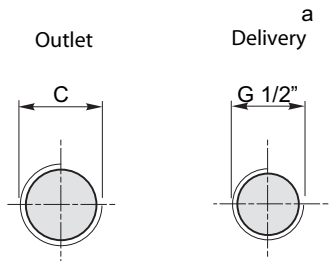

Size 4 ÷ 8
C
G 1/2"

Size 11 ÷ 26
C
G 3/4"

N

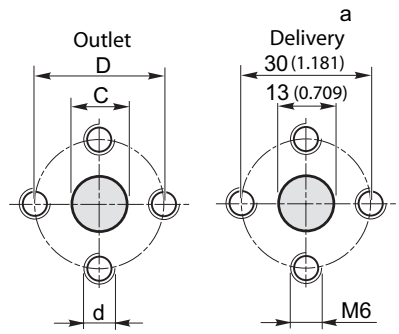

Size 4 ÷ 8		
C	D	d
13 (0.512)	30 (1.181)	M6

Size 11 ÷ 26		
C	D	d
19 (0.748)	40 (1.575)	M8

T

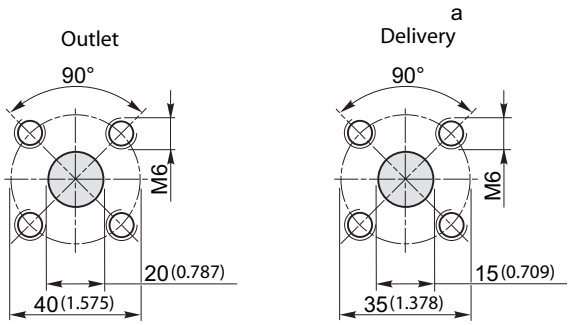

M

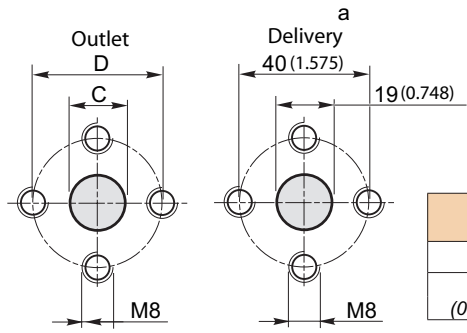

Size 11 ÷ 26	
C	D
19 (0.748)	40 (1.575)

U

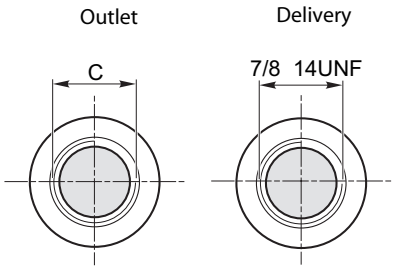

Size 4 ÷ 8
C
7/8 14UNF

Size 11 ÷ 26
C
1" 1/16 12UN

W

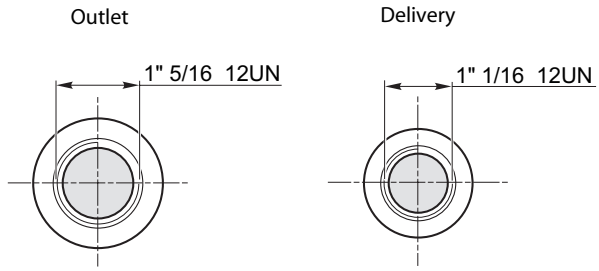

F

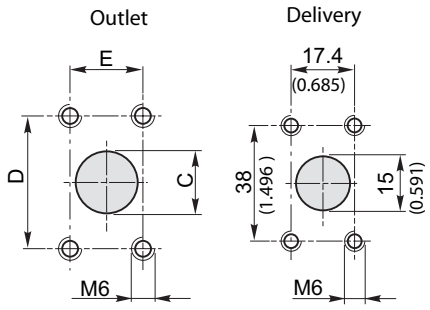

Size 4 ÷ 11		
C	D	E
20 (0.787)	38 (1.496)	17.4 (0.685)

Size 14 ÷ 26		
C	D	E
26 (1.024)	22.4 (0.882)	47.6 (1.874)

*The sign on the body identifies the **outlet side** for the motors.*

Connections positions

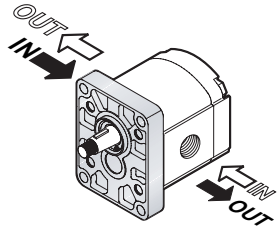

Rotation	
D	S

SEE PAGE 226 FOR PRICES

MOTORS GROUP 2 • CONNECTIONS FOR R MOTORS

G

Delivery / Outlet

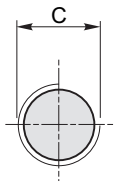

Size 4 ÷ 8
C
G 1/2"

Size 11 ÷ 26
C
G 3/4"

N

Delivery / Outlet

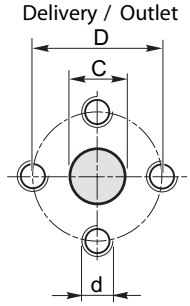

Size 4 ÷ 8		
C	D	d
13 (0.512)	30 (1.181)	M6

Size 11 ÷ 26		
C	D	d
19 (0.748)	40 (1.575)	M8

T

Delivery / Outlet

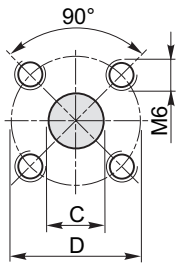

Size 4 ÷ 8	
C	D
15 (0.591)	35 (1.378)

Size 11 ÷ 26	
C	D
20 (0.787)	40 (1.575)

U

Delivery / Outlet

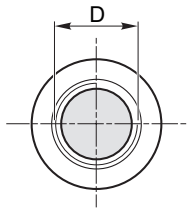

Size 4 ÷ 8
D
7/8 14UNF

Size 11 ÷ 26
D
1" 1/16 12UN

F

Delivery / Outlet

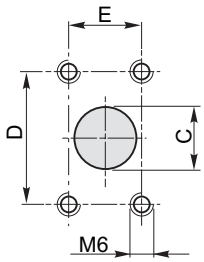

Size 4 ÷ 11		
C	D	E
20 (0.787)	38 (1.496)	17.4 (0.685)

Size 14 ÷ 26		
C	D	E
26 (1.024)	22.4 (0.882)	47.6 (1.874)

Any sign on the body in reversible motors is not considered.

Connections positions

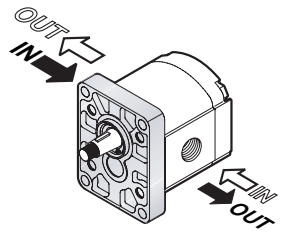

Rotation R

SEE PAGE 226 FOR PRICES

Flange and cover in Aluminium

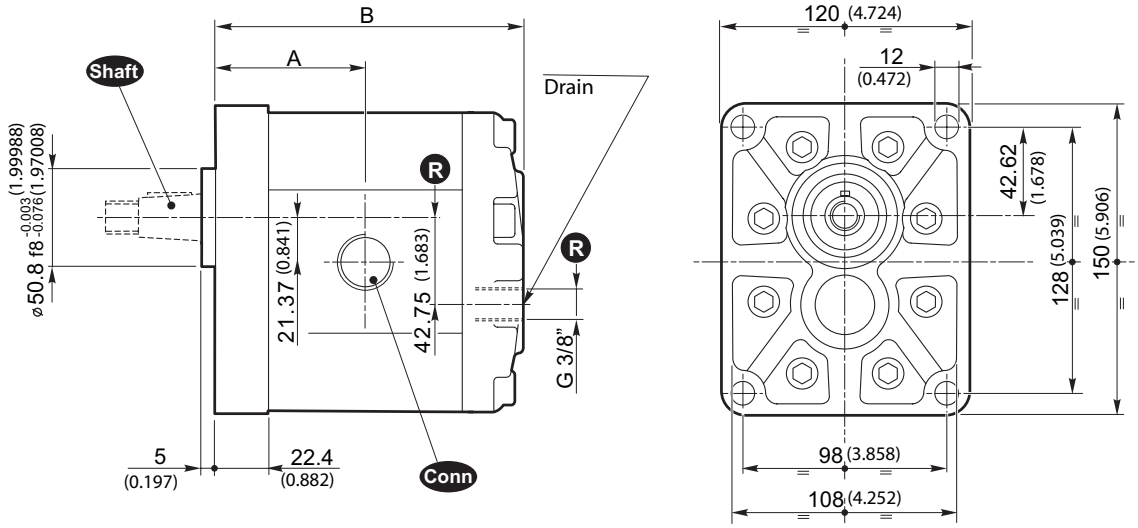

Flange and cover in Cast iron

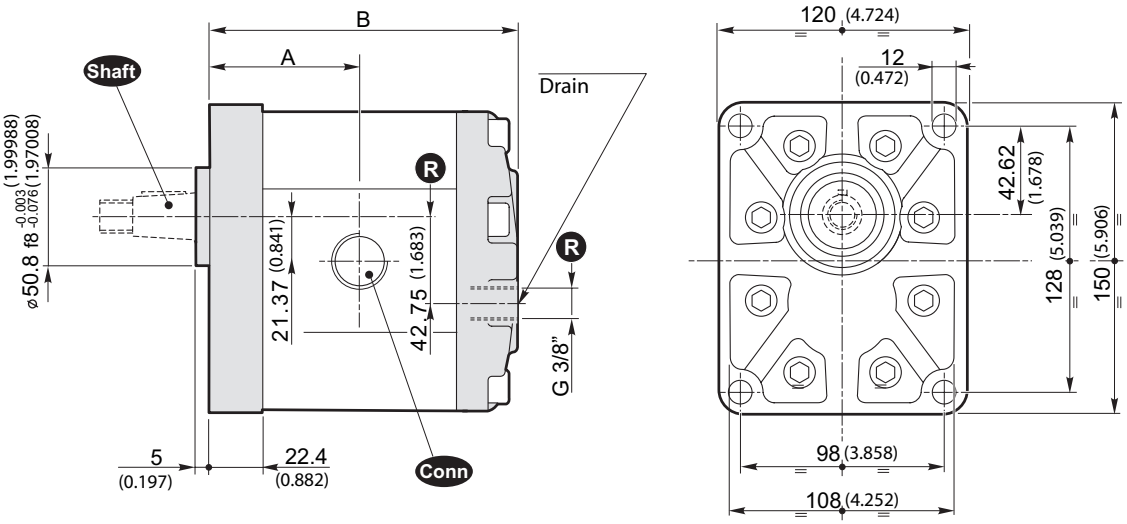

R *Only for reversible motors*

Size	Displacement [cm³/rev] (in³/rev)	STND (Aluminium) Dimensions A [mm] (inch)	B [mm] (inch)	Mass [Kg] (lbs)	Shaft	Conn	STND (Cast iron) Dimensions A [mm] (inch)	B [mm] (inch)	Mass [Kg] (lbs)	Shaft	Conn
3SM 19	**19** (1.16)	62.4 (2.457)	128.3 (5.051)	5.23 (11.5)			62.4 (2.457)	128.3 (5.051)	7.53 (16.6)		
3SM 22	**22.3** (1.36)	63.9 (2.516)	131.3 (5.169)	5.36 (11.8)			63.9 (2.516)	131.3 (5.169)	7.66 (16.9)		
3SM 29	**29.3** (1.79)	66.9 (2.634)	137.3 (5.406)	5.64 (12.4)		G	66.9 (2.634)	137.3 (5.406)	7.94 (17.5)		G
3SM 33	**32.9** (2.01)	68.4 (2.693)	140.3 (5.524)	5.78 (12.7)	10 13 14	N T W F	68.4 (2.693)	140.3 (5.524)	8.08 (17.8)	10 13 14	N T W F
3SM 36	**36.4** (2.22)	69.9 (2.752)	143.3 (5.642)	5.91 (13.0)			69.9 (2.752)	143.3 (5.642)	8.21 (18.1)		
3SM 44	**43.5** (2.65)	72.9 (2.870)	149.3 (5.878)	6.19 (13.7)			72.9 (2.870)	149.3 (5.878)	8.49 (18.7)		
3SM 52	**51.7** (3.15)	76.4 (3.008)	156.3 (6.154)	6.50 (14.3)			76.4 (3.008)	156.3 (6.154)	8.80 (19.4)		
3SM 62	**61.1** (3.73)	80.4 (3.165)	164.3 (6.469)	6.87 (15.1)			80.4 (3.165)	164.3 (6.469)	9.17 (20.2)		

SEE PAGES 219/220 FOR PORT SIZES AVAILABLE

SEE PAGE 226 FOR PRICES

SAE B-OR — SAE B — *Flange and cover in Aluminium*

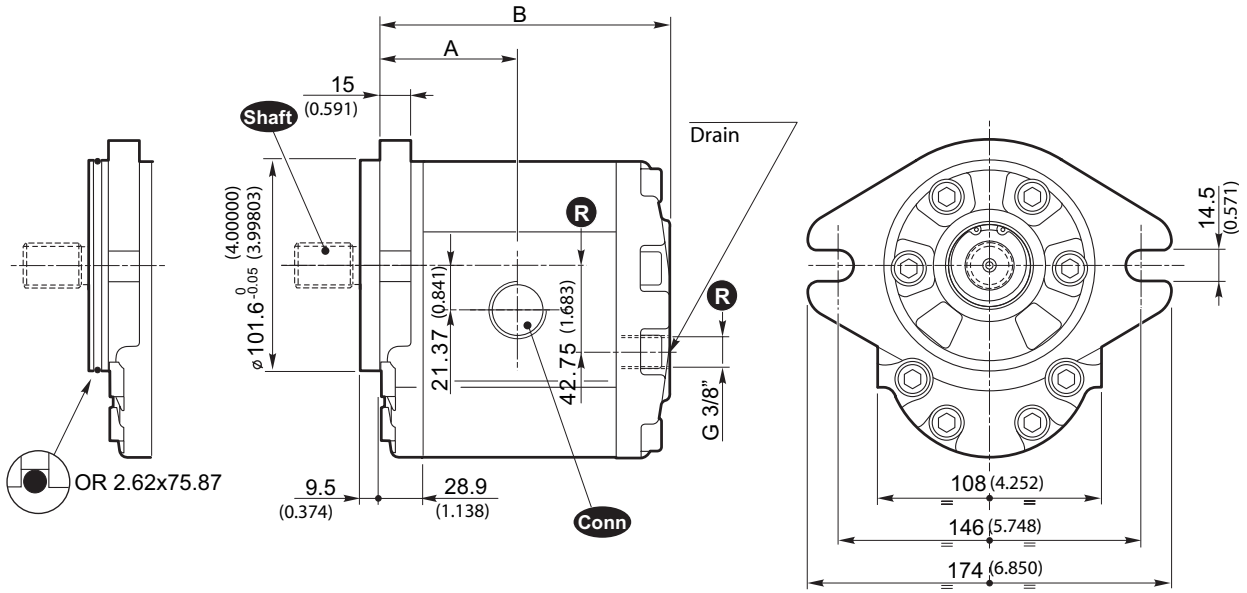

SAE B-OR — SAE B — *Flange and cover in Cast iron*

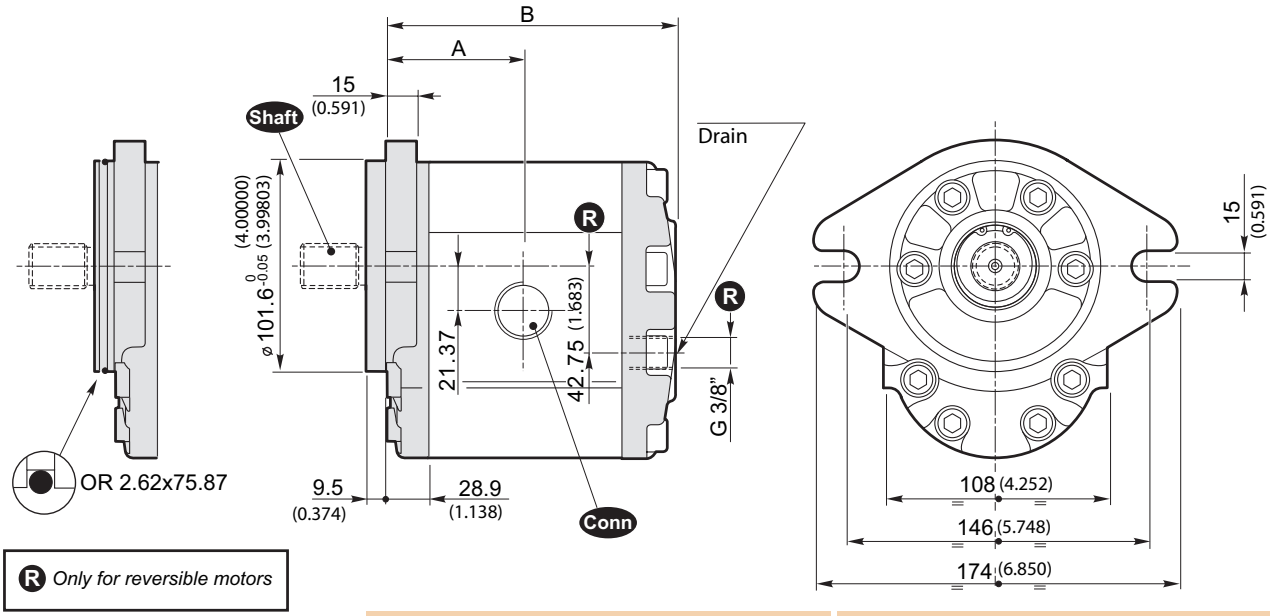

R *Only for reversible motors*

Size	Displacement [cm³/rev] (in³/rev)	Dimensions A [mm] (inch)	Dimensions B [mm] (inch)	Mass [Kg] (lbs)	Shaft	Conn	Dimensions A [mm] (inch)	Dimensions B [mm] (inch)	Mass [Kg] (lbs)	Shaft	Conn
		SAE B, SAE B-OR *(Aluminium)*					**SAE B, SAE B-OR** *(Cast iron)*				
3SM 19	**19** (1.16)	59.4 (2.339)	125.3 (4.933)	5.23 (11.5)	10 13 14	G N T W F	59.4 (2.339)	125.3 (4.933)	7.59 (16.7)	10 13 14	G N T W F
3SM 22	**22.3** (1.36)	60.9 (2.398)	128.3 (5.051)	5.36 (11.8)			60.9 (2.398)	128.3 (5.051)	7.72 (17.0)		
3SM 29	**29.3** (1.79)	63.9 (2.516)	134.3 (5.287)	5.64 (12.4)			63.9 (2.516)	134.3 (5.287)	8.00 (17.6)		
3SM 33	**32.9** (2.01)	65.4 (2.575)	137.3 (5.406)	5.78 (12.7)			65.4 (2.575)	137.3 (5.406)	8.14 (18.0)		
3SM 36	**36.4** (2.22)	66.9 (2.634)	140.3 (5.524)	5.91 (13.0)			66.9 (2.634)	140.3 (5.524)	8.27 (18.2)		
3SM 44	**43.5** (2.65)	69.9 (2.752)	146.3 (5.760)	6.19 (13.7)			69.9 (2.752)	146.3 (5.760)	8.55 (18.9)		
3SM 52	**51.7** (3.15)	73.4 (2.890)	153.3 (6.035)	6.50 (14.3)			73.4 (2.890)	153.3 (6.035)	8.86 (19.5)		
3SM 62	**61.1** (3.73)	77.4 (3.047)	161.3 (6.350)	6.87 (15.1)			77.4 (3.047)	161.3 (6.350)	9.23 (20.4)		

SEE PAGES 219/220 FOR PORT SIZES AVAILABLE

SEE PAGE 226 FOR PRICES

VLP- I (N)

Pressure relief valve with internal exhaust

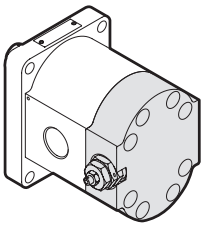

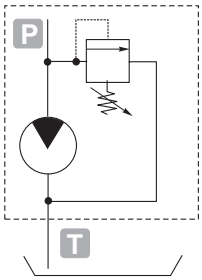

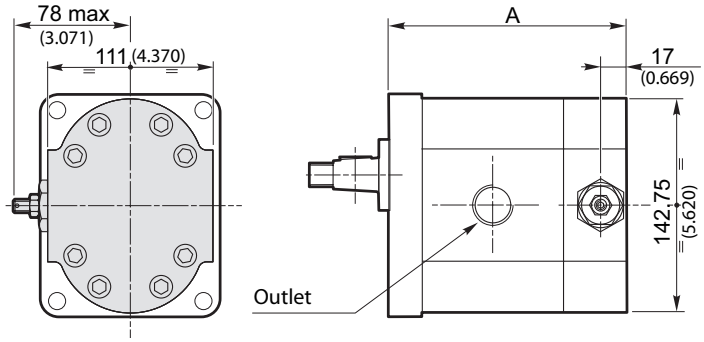

	A		
	Standard	SAE AA	E32 BX E32 CX
3SM 19	127.3 *(5.012)*	129.3 *(5.091)*	124.6 *(4.906)*
3SM 22	130.3 *(5.130)*	132.3 *(5.209)*	127.6 *(5.024)*
3SM 29	136.3 *(5.366)*	138.3 *(5.445)*	133.6 *(5.260)*
3SM 33	139.3 *(5.484)*	141.3 *(5.563)*	136.6 *(5.378)*
3SM 36	142.3 *(5.602)*	144.3 *(5.681)*	139.6 *(5.496)*
3SM 44	148.3 *(5.839)*	150.3 *(5.917)*	145.6 *(5.732)*
3SM 52	155.3 *(6.114)*	157.3 *(6.193)*	152.6 *(6.008)*
3SM 62	163.3 *(6.429)*	165.3 *(6.508)*	160.6 *(6.323)*

Warning.
The pressure relief valve can be applied by substituting the rear cover.
It is supplied only with aluminium flange and cover.
The showed motor is clockwise rotation.

The opening of the pressure relief valve should be carry out for times not over 7" each minute to avoid the overheating of the pump.

SEE PAGES 219/220 FOR PORT SIZES AVAILABLE

Example of ordering code

3SM	22	D	SAE B	-	10	G	(VT)	VLP-I	(N)

VLP-I	*Cover with VLP*	**VPL-I** *(at internal exhaust)*
(N)	*Spring type*	**B - N - R** *(See table)*

		Spring type B	N	R
		white spring	*black spring*	*red spring*
*Calibration fields**	[bar] *(psi)*	10 ÷ 100 *(145 ÷ 1450)*	30 ÷ 280 *(435 ÷ 4060)*	80 ÷ 380 *(1160 ÷ 5510)*

**** Without setting request, it will be considered standard (black spring: 2175 psi).***

SEE PAGE 226 FOR PRICES

Type **10**

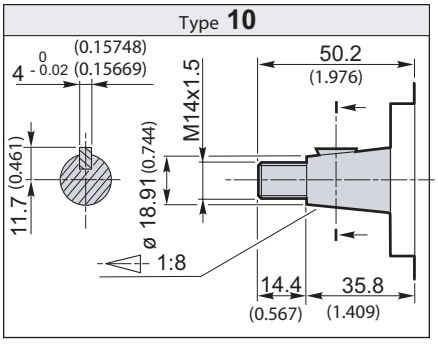

Torque **240 Nm** / *Torque **177 ft·lbs***

Type **13**

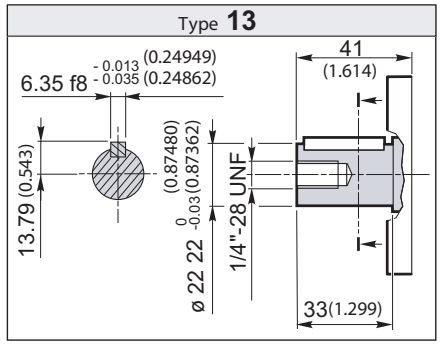

Torque **240 Nm** / *Torque **177 ft·lbs***

Type **14**

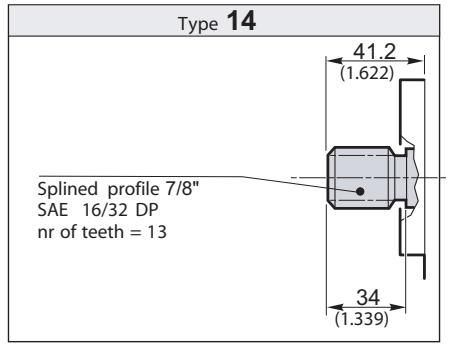

Torque **240 Nm** / *Torque **177 ft·lbs***

PORT CONNECTIONS for D-S motors

G

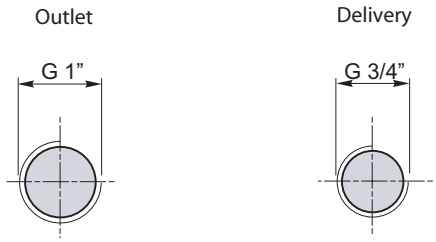

N

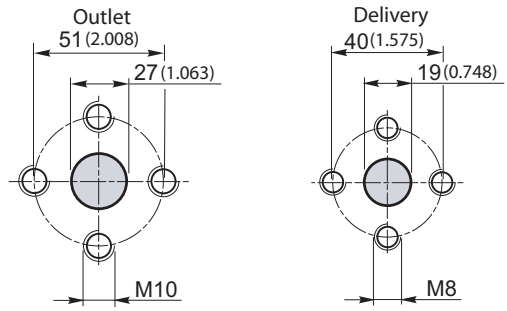

W

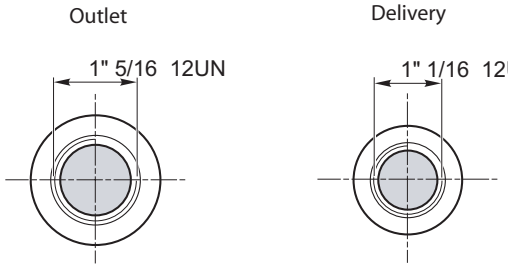

F

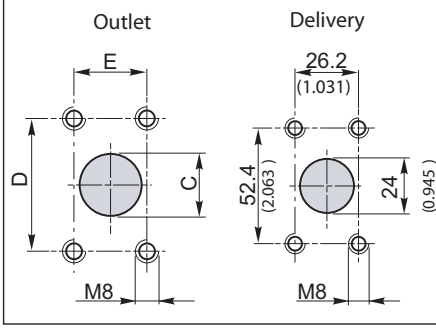

Size 19 ÷ 36		
C	**D**	**E**
27 (1.063)	52.4 (2.063)	26.2 (1.031)

Size 44 ÷ 62		
C	**D**	**E**
42 (1.654)	35.6 (1.402)	69.8 (2.748)

T

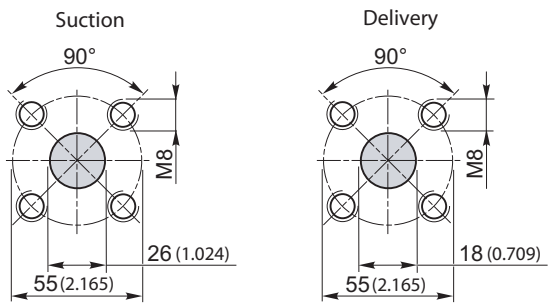

*The sign on the body identifies the **outlet side** for the motors.*

Connections positions

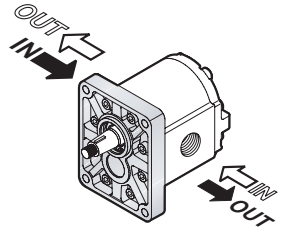

Rotation	
D	**S**
➡	⇨

SEE PAGE 226 FOR PRICES

G

Outlet - Delivery

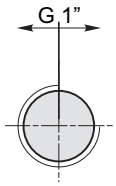

N

Outlet - Delivery

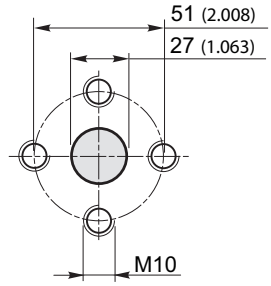

W

Outlet

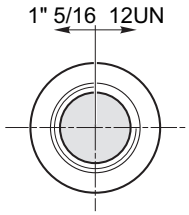

F

Outlet

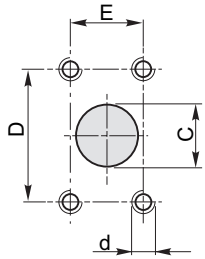

Size 19 ÷ 36			
C	**D**	**E**	**d**
27 *(1.063)*	52.4 *(2.063)*	26.2 *(1.031)*	M8

Size 44 ÷ 62			
C	**D**	**E**	**d**
32 *(1.260)*	58.7 *(2.311)*	30.2 *(1.189)*	M10

T

Outlet - Delivery

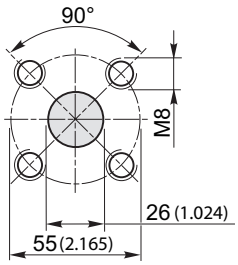

Connections positions

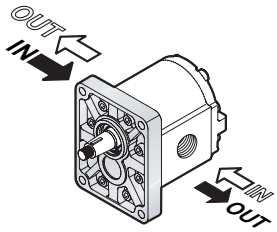

Rotation
R

SEE PAGE 226 FOR PRICES

GROUP 1 GEAR PUMPS + GEAR MOTORS PRICE LIST

DESCRIPTION	4 BOLT FLANGE STANDARD	FLANGE MINI-POWERPACK	FLANGE E32C FLANGE E32B	2 BOLT FLANGE SAE AA
PUMP 1SPA 0,9	£164.97	£164.97	£173.20	£173.20
PUMP 1SPA 1,2	£164.97	£164.97	£173.20	£173.20
PUMP 1SPA 1,6	£164.97	£164.97	£173.20	£173.20
PUMP 1SPA 2,0	£164.97	£164.97	£173.20	£173.20
PUMP 1SPA 2,5	£168.83	£168.83	£177.26	£177.26
PUMP 1SPA 3,2	£168.83	£168.83	£177.26	£177.26
PUMP 1SPA 3,7	£168.83	£168.83	£177.26	£177.26
PUMP 1SPA 4,2	£168.83	£168.83	£177.26	£177.26
PUMP 1SPA 5,0	£173.44	£173.44	£182.11	£182.11
PUMP 1SPA 6,3	£173.44	£173.44	£182.11	£182.11
PUMP 1SPA 7,8	£178.64	£178.64	£187.57	£187.57
PUMP 1SPA 9,8	£184.87	£184.87	£193.21	£193.21

ADD-ON EXTRAS (NOT SPARES PRICES)	
SEAL FOR HIGHT PRESSURE (K)	£5.78
STND and SAE AA PUMP with OR	£5.66
SHAFT SEAL (EB32C)	£6.07
SHAFT SEAL (H)	£7.32
VITON SEAL	£30.07
END-COVER with MAIN RELIEF VALVE INTERNAL EXHAUST	£65.78

ADDITIONAL PRICES FOR PRICING UP TANEM PUMPS. GROUP 1 BASED	
KIT MULTIPLE PUMP 1P + 1P Standard	£78.62
DISJUNCTOR VALVE ON INTERMEDIATE FLANGE	£212.27
COMMON SUCTION (1st 2nd and 3rd pump)	additional price by 5% on multiple pump

GROUP 2 GEAR PUMPS + GEAR MOTORS PRICE LIST

FOR TRIPLE AND QUADRUPLE KEEP ADDING 'KIT MULTIPLE PUMP'
• TANDEM = 1 KIT • TRIPLE = 2 KITS
• QUADRUPLE = 3 KITS

DESCRIPTION	4 BOLT ALUMINIUM FLANGE STANDARD	ALUMINIUM FLANGE B50-B80-E52-M52-SAEA	ALUMINIUM FLANGE PRKS	4 BOLT CAST-IRON FLANGE STANDARD	2 BOLT CAST-IRON FLANGE SAE A
PUMP 2 SP 4	£204.28	£214.30	£247.75	£231.27	£241.27
PUMP 2 SP 6	£204.28	£214.30	£247.75	£231.27	£241.27
PUMP 2 SP 8	£204.28	£214.30	£247.75	£231.27	£241.27
PUMP 2 SP 11	£210.45	£214.30	£253.91	£238.19	£248.22
PUMP 2 SP 14	£210.45	£214.30	£253.91	£238.19	£248.22
PUMP 2 SP 16	£210.45	£214.30	£253.91	£238.19	£248.22
PUMP 2 SP 19	£217.38	£228.18	£271.47	£244.37	£255.16
PUMP 2 SP 22	£217.38	£228.18	£271.47	£244.37	£255.16
PUMP 2 SP 26	£222.77	£233.56	£271.47	£249.40	£260.55

ADD-ON EXTRAS (NOT SPARES PRICES)	
SUPPORT INCORPORATED IN THE FLANGE	£96.34
SUPPORT Ø 50,8 - shaft Ø 22	£106.51
FLANGE WITH BEARING (for B50C and B80C)	£35.46
FLANGE WITH O-Ring	£8.47
SHAFT SEAL (H)	£10.02
SEAL FOR HIGH PRESSURE (K) - 30 bar	£5.78
SEAL FOR HIGH PRESSURE (KK) - 100 bar	£11.60
SHAFT SEAL (MC52CX)	£6.73
SPECIAL KEY draw.25053	£5.97
VITON SEAL	£30.07
END-COVER with MAIN RELIEF VALVE INTERNAL EXHAUST	£70.14
END-COVER with MAIN RELIEF VALVE EXTERNAL EXHAUST	£74.78

ADD-ON EXTRAS (NOT SPARES PRICES)	
UNIDIRECTIONAL MOTOR (CLOCKWISE OR ANTICLOCKWISE MOTOR)	£10.02
BIDIRECTIONAL PUMP AND MOTOR (REVERSIBLE MOTOR)	£49.33
END COVER TWO SPEED (ON UNID. MOTOR)	£322.99
ANTICAVITATION VALVE VA MOTORE	£89.04
SPECIAL COVER WITH PRIORITY VALVE - VRF	£180.98
SPECIAL COVER WITH PRIORITY VALVE AND PRESSURE VALVE - VRF+VLP	£214.13

ADDITIONAL PRICES FOR PRICING UP TAMDEM PUMPS. GROUP 2 BASED		
KIT MULTIPLE PUMP	GR.2SP + GR.1	£90.20
KIT MULTIPLE PUMP	GR.2SP + GR.2SP	£90.20
Common suction (1st 2nd and 3rd pump)	additional price by 5% on multiple pump	

GROUP 3 GEAR PUMPS + GEAR MOTORS PRICE LIST

FOR TRIPLE AND QUADRUPLE KEEP ADDING 'KIT MULTIPLE PUMP'
• TANDEM = 1 KIT • TRIPLE = 2 KITS
• QUADRUPLE = 3 KITS

DESCRIPTION	4 BOLT ALUMINIUM FLANGE STANDARD	2 BOLT ALUMINIUM FLANGE SAE B	4 BOLT CAST-IRON FLANGE	2 BOLT CAST-IRON FLANGE SAE B
PUMP 3 SP 19	£392.37	£413.18	£439.39	£466.70
PUMP 3 SP 22	£392.37	£413.18	£439.39	£466.70
PUMP 3 SP 29	£404.70	£425.53	£451.73	£479.01
PUMP 3 SP 33	£404.70	£425.53	£451.73	£479.01
PUMP 3 SP 36	£404.70	£425.53	£451.73	£479.01
PUMP 3 SP 44	£417.04	£437.86	£464.06	£492.88
PUMP 3 SP 52	£417.04	£437.86	£464.06	£492.88
PUMP 3 SP 62	£437.86	£458.66	£484.88	£514.44

ADD-ON EXTRAS (NOT SPARES PRICES)	
FLANGE WITH O-Ring	£12.71
SHAFT SEAL (H)	£10.02
SEAL FOR HIGHT PRESSURE (K)	£5.78
VITON SEAL	£31.60
UNIDIRECTIONAL MOTOR	£49.75
BIDIRECTIONAL MOTOR	£67.54
SUPPORT ZFC	£183.43
END-COVER WITH MAIN RELIEF VALVE	£93.28

ADDITIONAL PRICES FOR PRICING UP TAMDEM PUMPS. GROUP 3 BASED		
KIT MULTIPLE PUMP	GR.3SP + GR.1SP	£131.80
KIT MULTIPLE PUMP	GR.3SP + GR.2SP	£140.31
KIT MULTIPLE PUMP	GR.3SP + GR.3SP	£148.78

FOR TRIPLE AND QUADRUPLE KEEP ADDING 'KIT MULTIPLE PUMP'
• TANDEM = 1 KIT • TRIPLE = 2 KITS
• QUADRUPLE = 3 KITS

50% OFF ALL PRICES

GEAR PUMPS

FEATURES 228
TECHNICAL INFORMATION 229
PUMPS GROUP 1 • PERFORMANCE DATA 231
PUMPS GROUP 2 • PERFORMANCE DATA 233
PUMPS GROUP 3 • PERFORMANCE DATA 235
PUMPS GROUP 1 • STANDARD 237
PUMPS GROUP 1 • SAE AA 239
PUMPS GROUP 1 • MC32 241
PUMPS GROUP 1 • E 32 BX 243
PUMPS GROUP 1 • E 32 CX 244
PUMPS GROUP 1 • PORT CONNECTIONS 247
PUMPS GROUP 1 • OPTIONAL 248
PUMPS GROUP 2 • STANDARD 249
PUMPS GROUP 2 • SAE A, SAE A-OR 253
PUMPS GROUP 2 • B80C 257
PUMPS GROUP 2 • B50C 259
PUMPS GROUP 2 • E52C 261
PUMPS GROUP 2 • PRKS 400 D 263
PUMPS GROUP 2 • SAE A 14* (z=10), SAE A 14** (z=11), ... 265
PUMPS GROUP 2 • SUPP.STND 267
PUMPS GROUP 2 • PORT CONNECTIONS 269
PUMPS GROUP 2 • OPTIONAL 270
PUMPS GROUP 3 • STANDARD 273
PUMPS GROUP 3 • SAE B, SAE B-OR 277
PUMPS GROUP 3 • ZFC 281
PUMPS GROUP 3 • PORT CONNECTIONS 283
PUMPS GROUP 3 • OPTIONAL 284
GROUP 1 GEAR PUMPS + GEAR MOTORS PRICE LIST 285
GROUP 2 GEAR PUMPS + GEAR MOTORS PRICE LIST 285
GROUP 3 GEAR PUMPS + GEAR MOTORS PRICE LIST 285

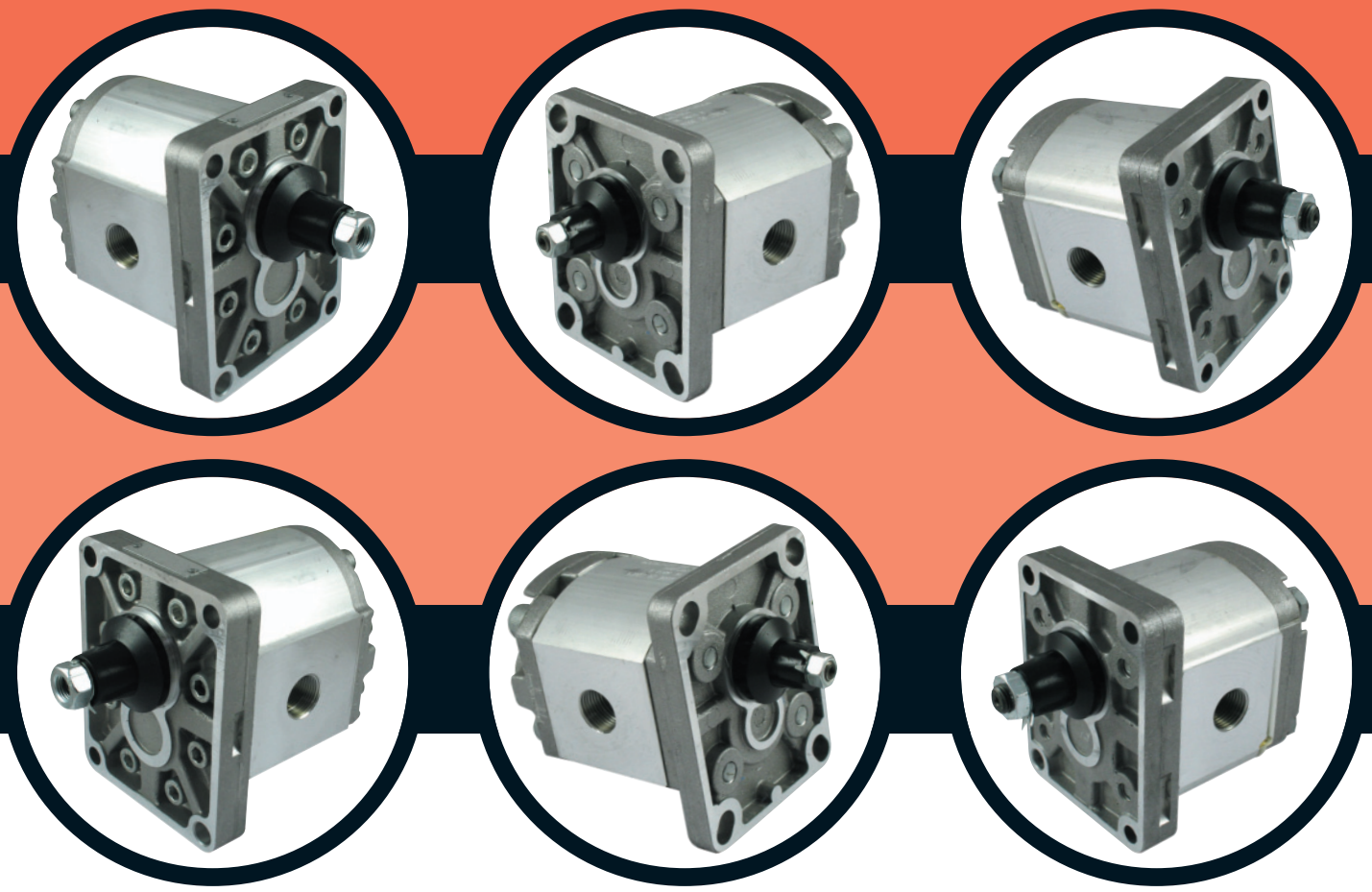

Galtech s.p.a
OLEODINAMICA
Gruppo Gallinari

Definition of pressures

The pumps can be subjected to the pressures P1, P2 or P3 indicated in the performance tables. The following diagram illustrates the definitions and applicability of these, compared to the rotation speed limits included.

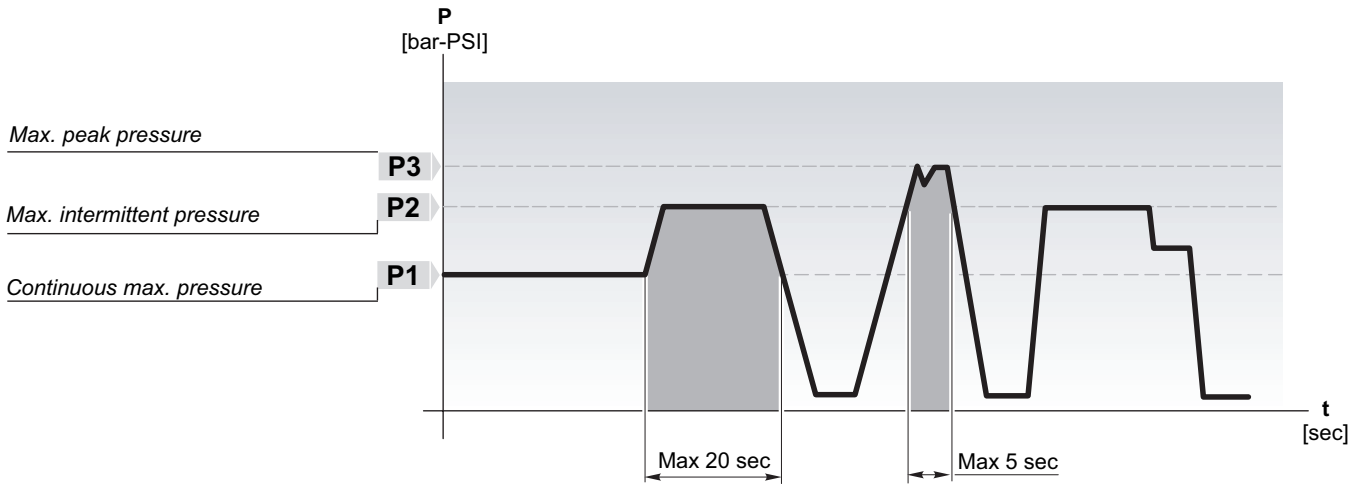

Hydraulic measures

Q	*Flow*	[l/min - *Gal/min*]
M	*Torque*	[Nm - *lbf.in*]
P	*Power*	[kW - *HP*]
V	*Displacement*	[cm^3/rev - *in^3/rev*]
N	*Speed*	[min^{-1} - *rpm*]
Δp	*Pressure*	[bar - *PSI*]
η_v	*Volumetric efficiency*	
η_m	*Mechanical efficiency*	

Useful formulas

$$\mathbf{Q} = V\,[cm^3/rev] \times \eta_v \times n \times 10^{-3} \quad l/min$$

$$\mathbf{M} = \frac{\Delta p\,[bar] \times V\,[cm^3 rev]}{62.83 \times \eta_m} \quad Nm$$

$$\mathbf{P} = \frac{\Delta p\,[bar] \times V\,[cm^3 rev] \times n}{600 \times 1000 \times \eta_t} \quad kW$$

Conversion factors

1 l/min = 0.2641 US Gal/min
1 Nm = 8.851 in·lbs
1 Nm = 0.7375 ft·lbs
1 N = 0.2248 lbs
1kW = 1.34 HP
1cm^3/giro = 0.061 in^3/rev
1 bar = 14.5 PSI
1 mm = 0.0394 in
1 kg = 2.205 lbs

50% OFF ALL PRICES

Hydraulic fluids

It is advisable to use hydraulic oils of mineral origin with anti-foaming, anti-oxidant and anti-corrosion characteristics and a high viscosity index;
- Recommended viscosity 15 ÷ 92 mm² /s (cSt)
- Start-up viscosity limit 3000 mm² /s (cSt)
During normal operation, the temperature of the oil must be between 20°C and 65°C and limit values between -15°C and 80°C.

Suction pressure

The allowed working pressure supplied must be in the range 0.7 - 3 bar (absolute).
For higher values (up to 30 bar), versions with a K seal must be used.

Suction and delivery pipes

Particular attention must be given to the sizing of pipes (rigid or flexible), avoiding disproportionate lengths, sudden variations in cross section or small curvature radius, in any case selecting pipe cross-sections that guarantee an oil speed between 0.6 and 12 m/s.

Filtration

In order to eliminate any impurities present in the oil and to guarantee a longer duration of the pump, the system must be equipped with effective filtration which must be periodically checked to ensure that it is operating correctly.
The following are the recommended filtration levels:
- 26/23 ISO DIS 4406 up to 150 bar
- 23/20 ISO DIS 4406 for higher pressures.

Installation notes

- *Make sure that the coupling used for pulling compensates for any axial misalignments that could compromise the integrity of the pump.*
- *If there are radial and/or axial/ loads on the pump shaft (as is the case, for example, when pulling is carried out using pulleys and belts) the versions available with a support must be chosen.*
- *The connection coupling between spline shafts must be appropriately lubricated, free to move axially and of an adequate length to cover the entire extension of the two shafts (motor and pump).*
- *If the pump is painted, protect the shaft seal and also make sure that the contact zone between the shaft seal and the shaft is free of dust or abrasive sediments.*

Rotation direction

The rotation direction is defined as S (left/anticlockwise) or D (right/clockwise) by observing the shaft from the front.
The pumps are monodirectional and therefore when ordering the required rotation direction must be specified; alternatively it is possible to modify the internal set-up as illustrated below (inversion of the rotation direction).
The pages regarding the pump characteristics highlight the directions of the delivery and suction flows for each version and rotation direction.

Pressure drops

The following nomogram allows you to calculate the pressure drops for each 100 m of piping when the viscosity of the oil, the delivery capacity of the pump and the diameter of the piping are known.
The viscosity (V), flow capacity (Q) and diameter (D) values are fixed on the respective scales; a line is drawn joining the points V and Q; the point where this intersects the index line is defined as point I. If the line joining point I to point D is extended, the load pressure drops value can then be read at the intersection with the last scale.

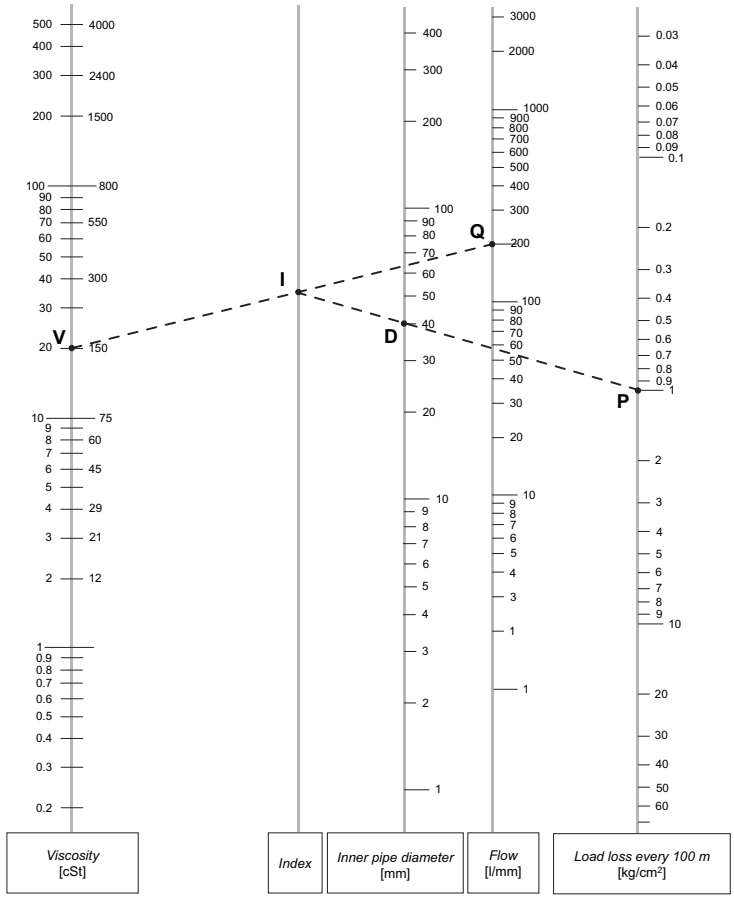

How to reverse pump rotation

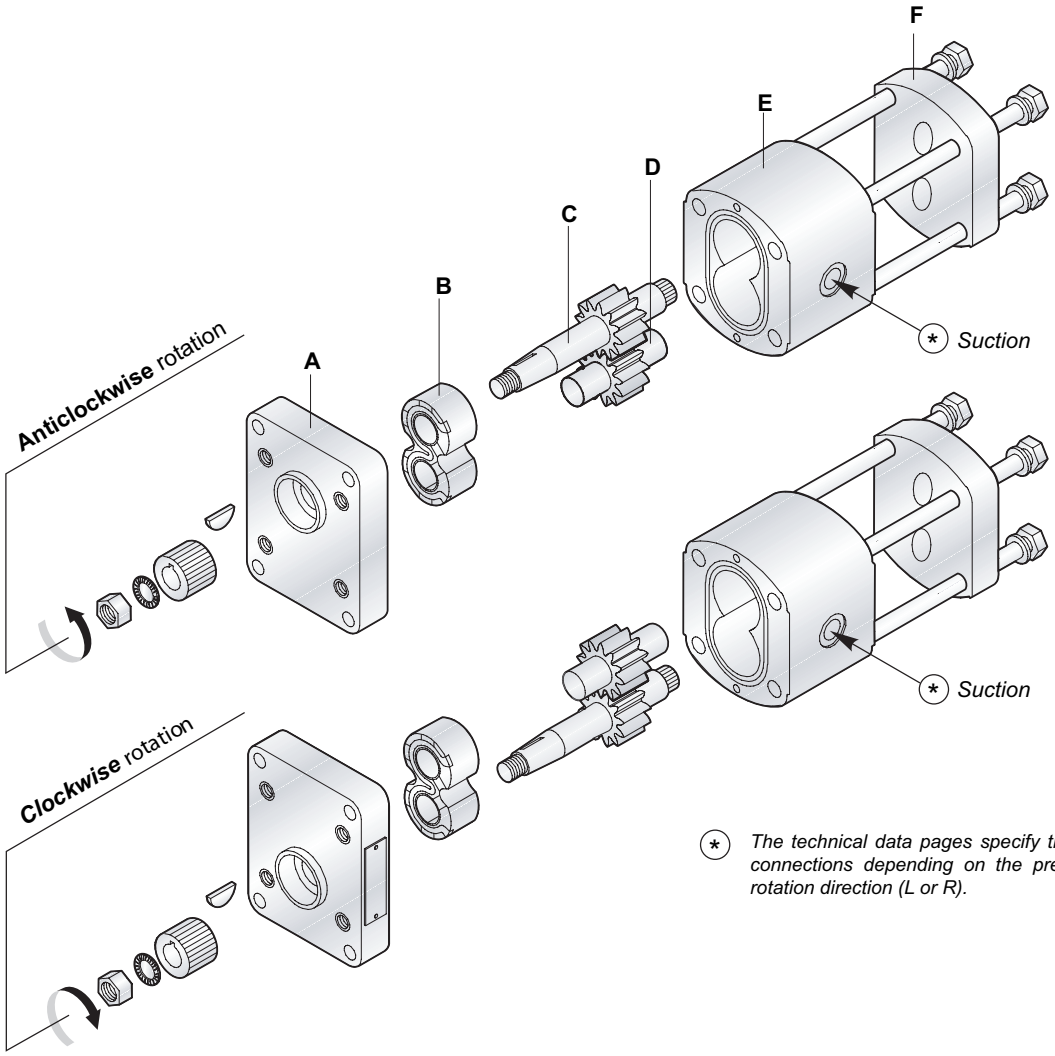

Fig. 1

Fig. 2

(*) *The technical data pages specify the connections depending on the preconfigured rotation direction (L or R).*

The gear pumps direction of rotation is indicated by an arrow on the label.

How to reverse the pumps rotation:

- *Disassemble pump as shown in figure 1.*
- *Pull off gears C - D and reassemble according to figure 2.*
- *Reassemble bushing B as before.*
- *Reverse the flange A and reassemble the pump tightening the screws by using a torque wrench.*
- *For the pumps GR3 - GR4, disassemble only front flange.*

Type of pump	GR1	GR2	GR3	GR4
Numbers of screws	4	4	16	16
Type of threads	M8	M10	M10	M14
Tightening torque of screws	30 Nm *(266 in-lbs)*	50 Nm *(443 in-lbs)*	60 Nm *(531 in-lbs)*	140 Nm *(1239 in-lbs)*
Type of coupling	1IS 12M	2IS 14M 2IS 15M	3IS 18M	4IS 23M
Tightening torque at nut coupling	9 ÷ 10 Nm *(80 ÷ 89 in-lbs)*	22 ÷ 25 Nm *(195 ÷ 221 in-lbs)* 32 ÷ 35 Nm *(283 ÷ 310 in-lbs)*	50 ÷ 55 Nm *(443 ÷ 487 in-lbs)*	100 ÷ 120 Nm *(885 ÷ 1062 in-lbs)*

Assembling to housing-out

50% OFF ALL PRICES

Flow - Speed chart

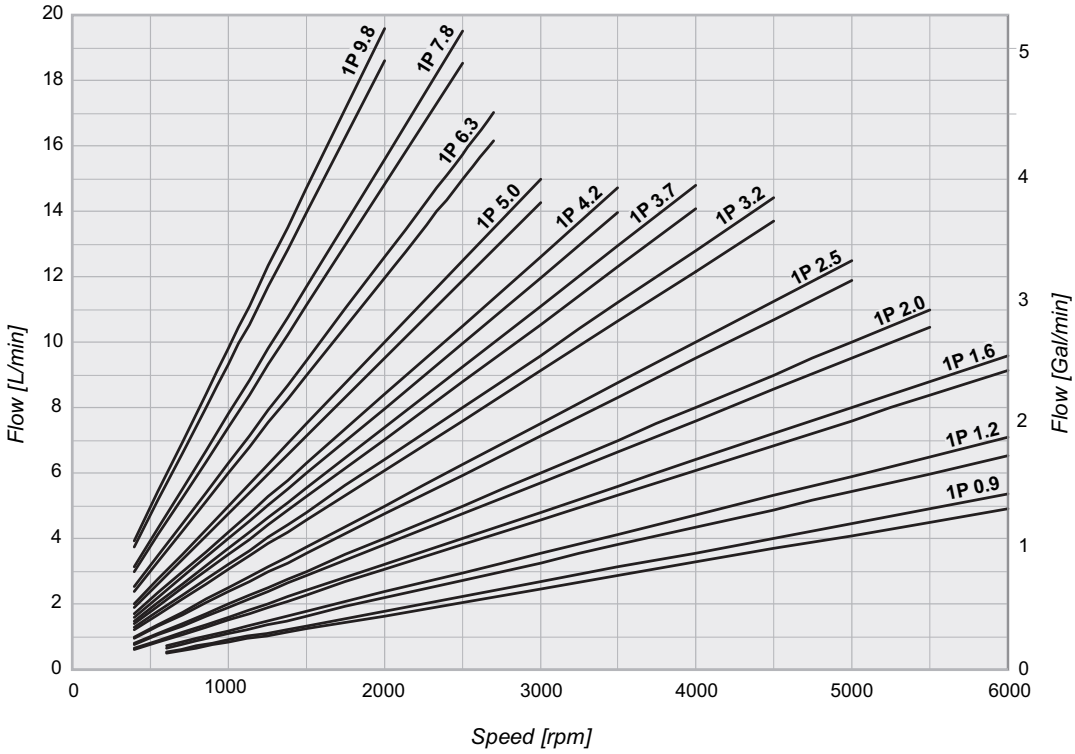

Pumps Group 1 Power and Speed Diagrams

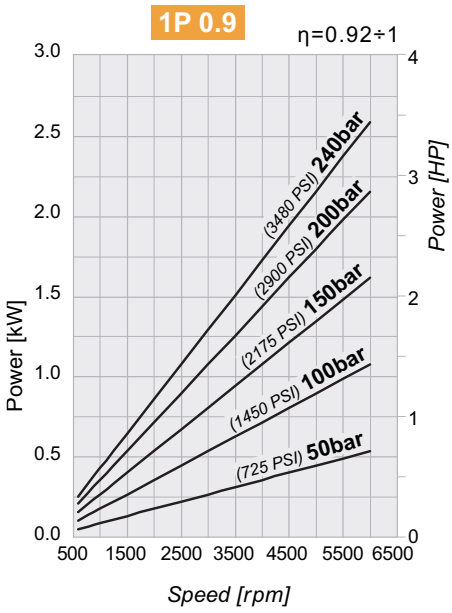

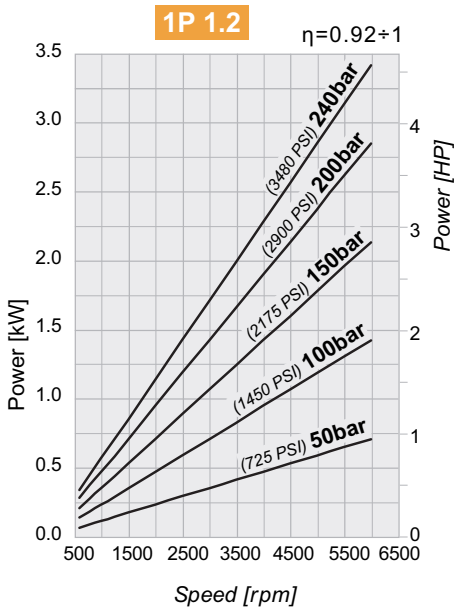

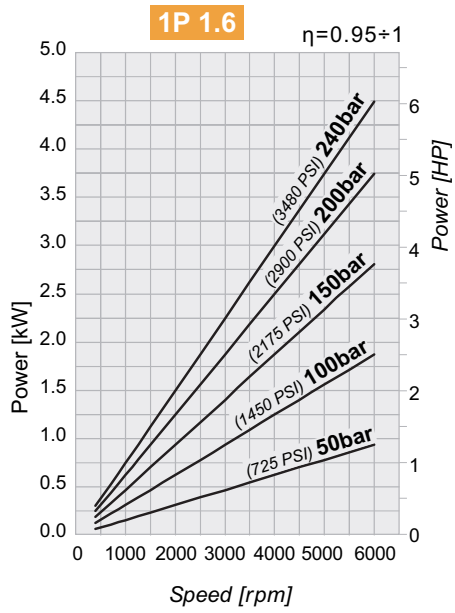

Pumps Group 1 Power and Speed Diagrams

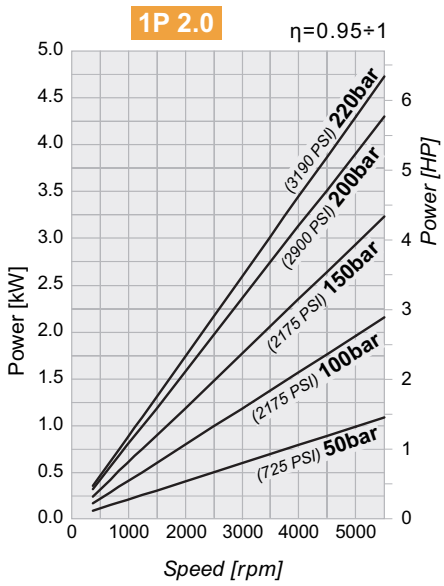

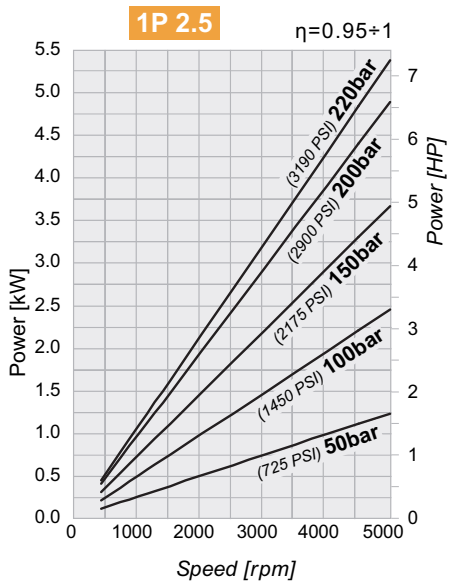

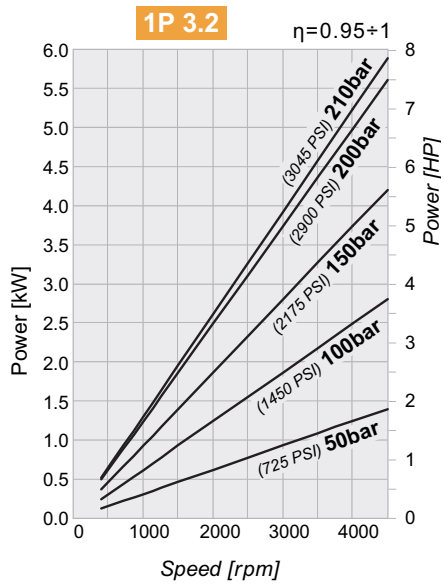

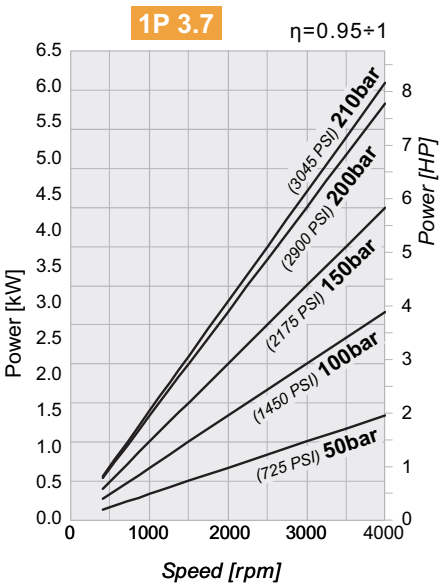

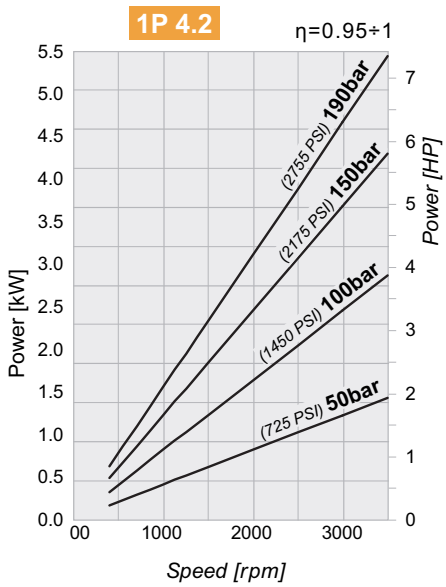

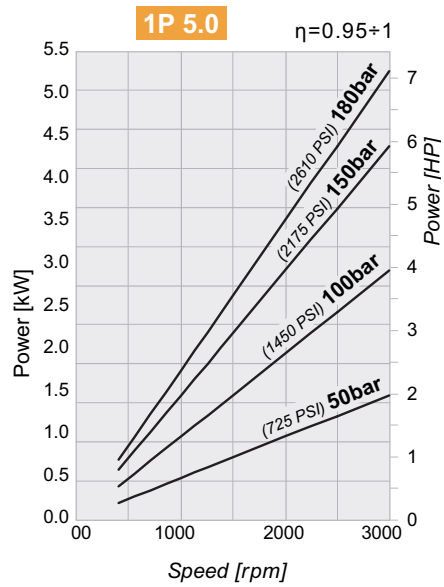

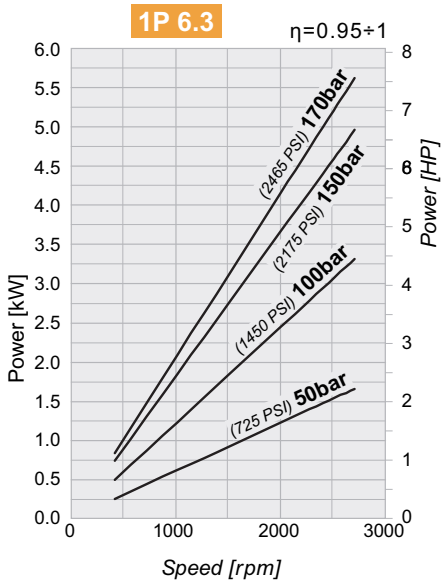

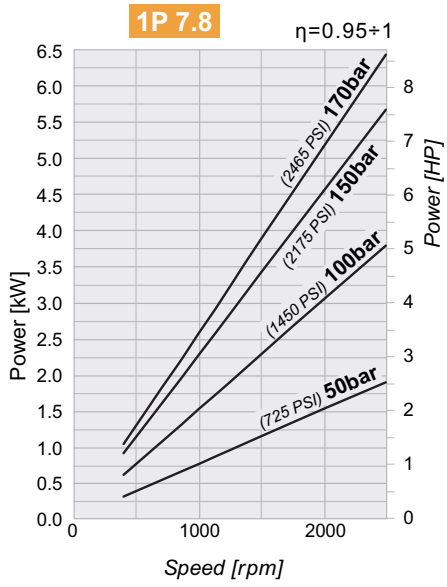

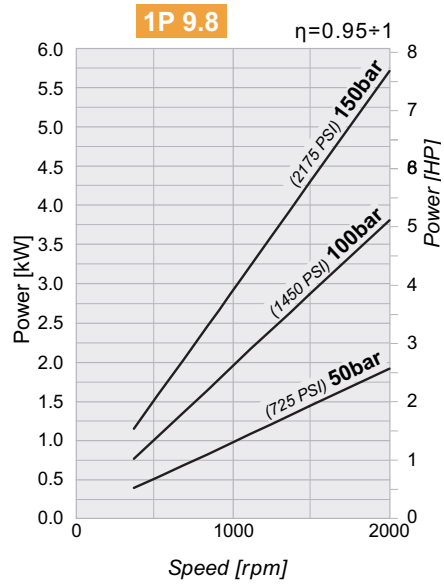

50% OFF ALL PRICES

Flow - Speed chart

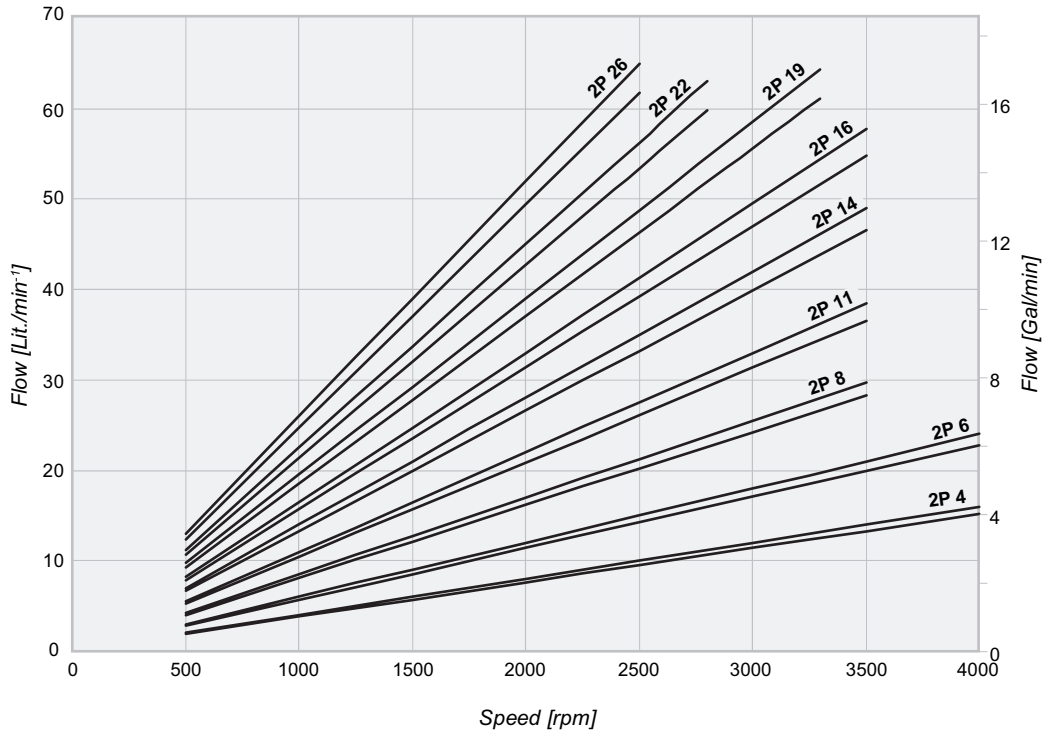

Pumps Group 2 Power and Speed Diagrams

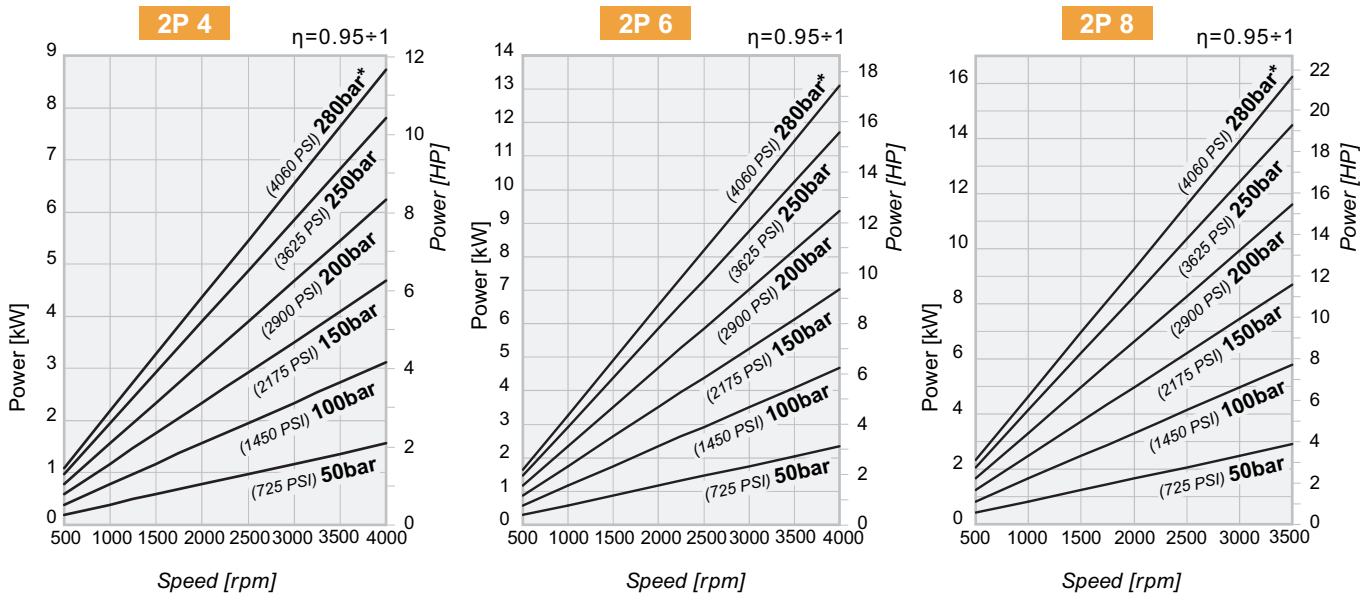

** Only for cast iron pumps*

Pumps Group 2 Power and Speed Diagrams

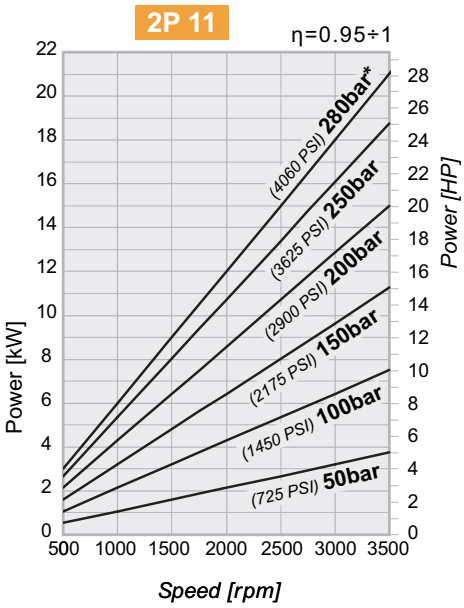

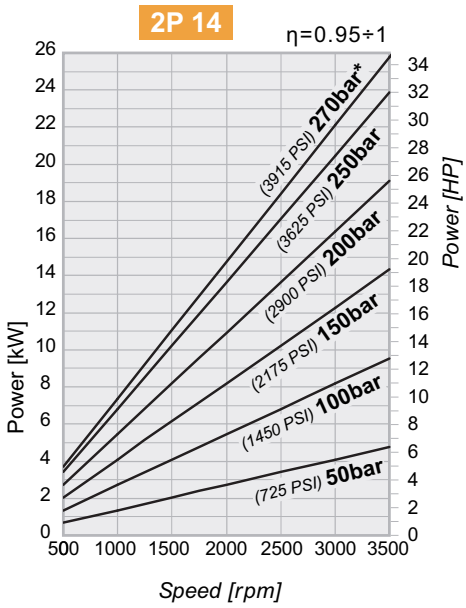

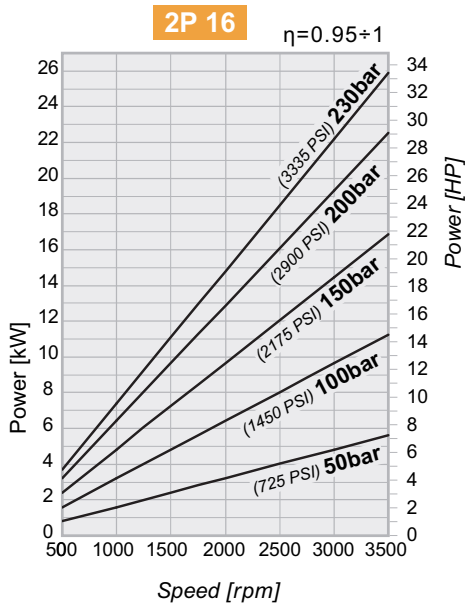

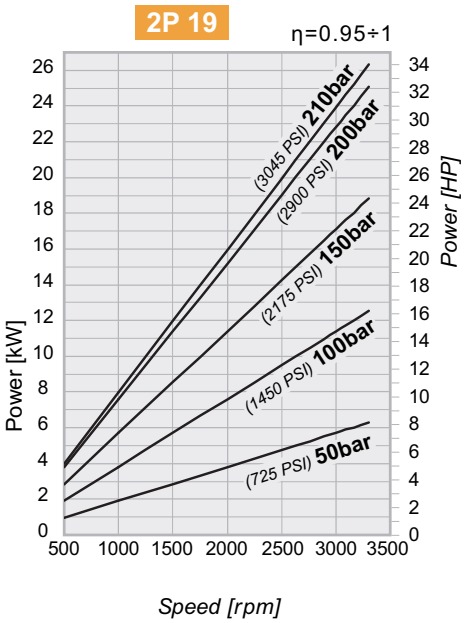

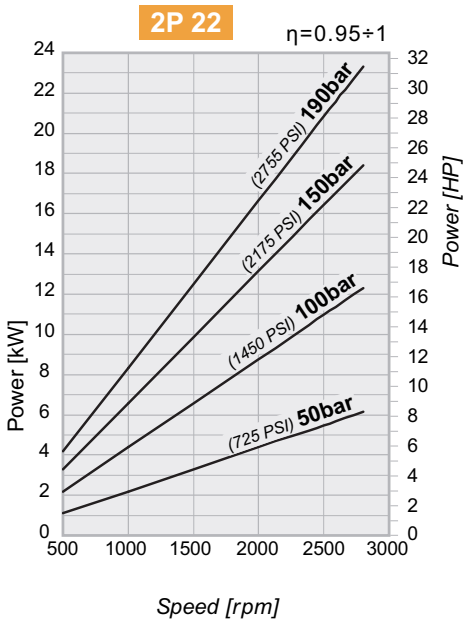

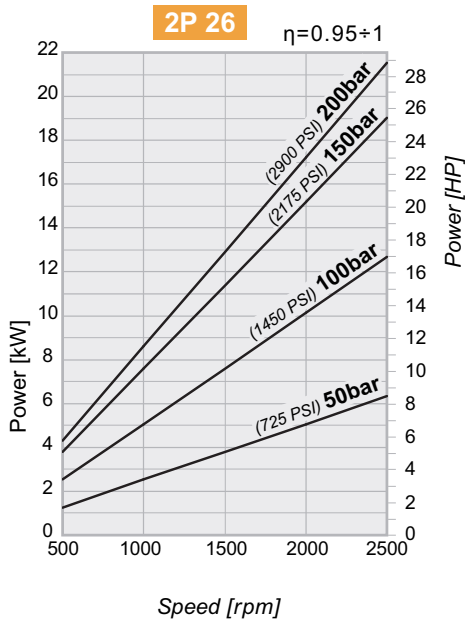

50% OFF ALL PRICES

Flow - Speed chart

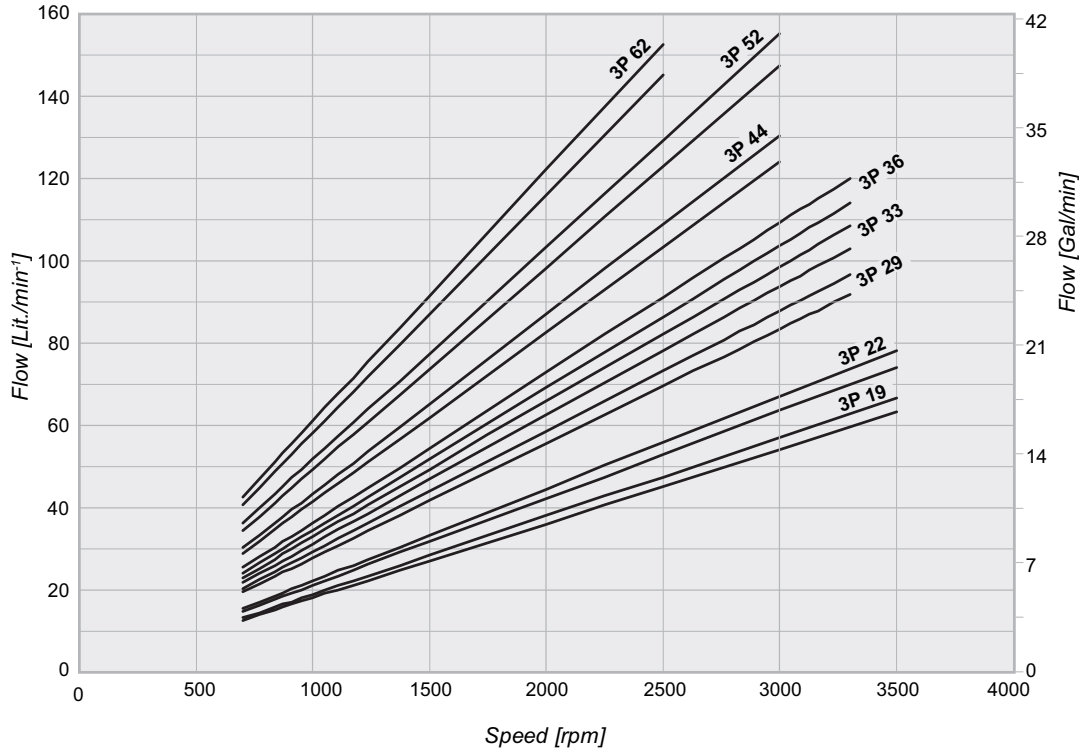

Pumps Group 3 Power and Speed Diagrams

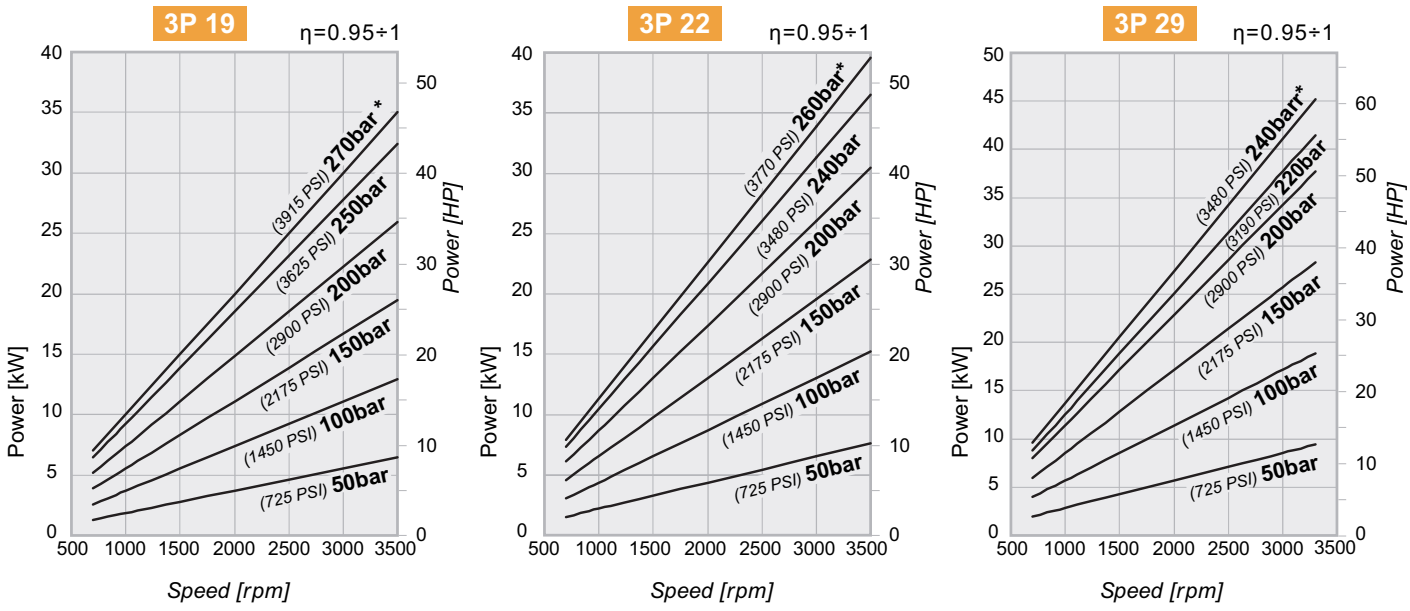

** Only for cast iron pumps*

Pumps Group 3 Power and Speed Diagrams

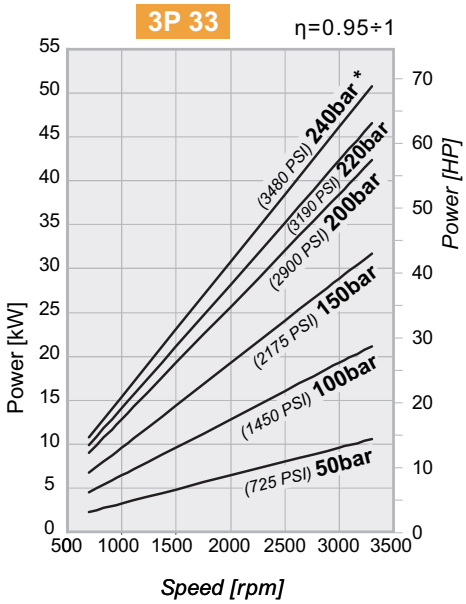

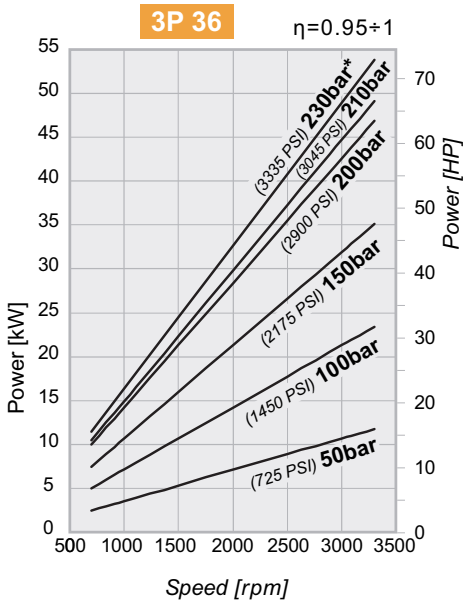

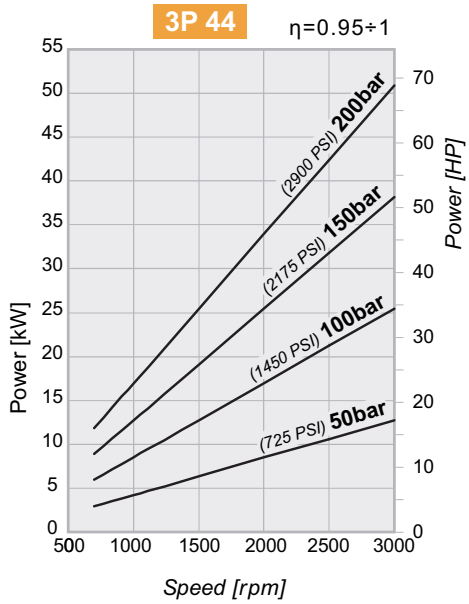

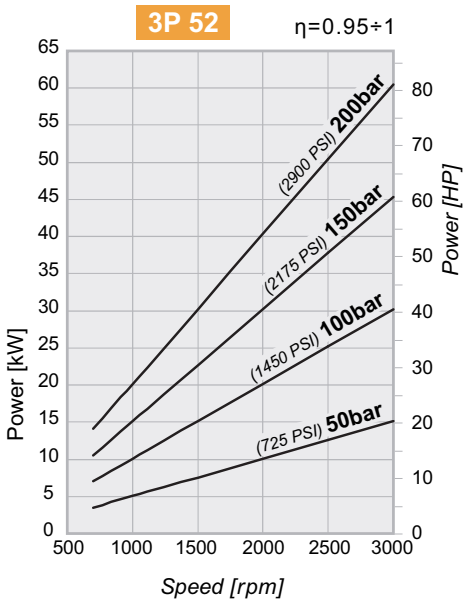

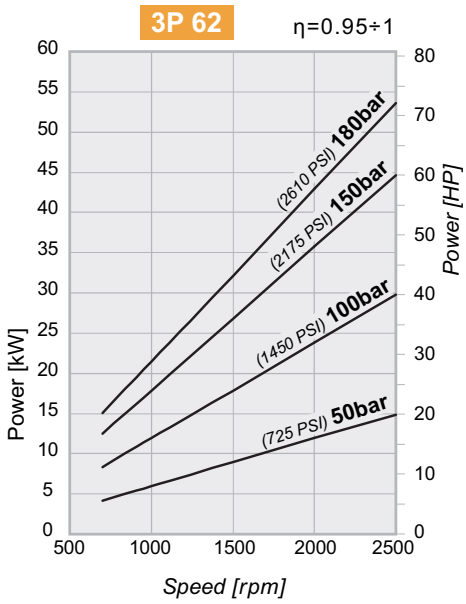

50% OFF ALL PRICES

PUMPS GROUP 1 • STANDARD

Technical data

Size	Displacement	Max. working pressure			Max. speed	Max. flow	Min. speed	Min. flow	Dimensions		Mass	Min. volumetric efficiency
		P1	P2	P3					A	B		
	[cm³/rev] (in³/rev)	[bar] (PSI)	[bar] (PSI)	[bar] (PSI)	[g/min] (rpm)	[lt/min] (Gal/min)	[g/min] (rpm)	[lt/min] (Gal/min)	[mm] (inch)	[mm] (inch)	[Kg] (lbs)	%
1SP A0.9	**0.89** (0.05)	240 (3480)	260 (3770)	290 (4205)	6000	5.3 (1.40)	600	0.49 (0.13)	34.80 (1.370)	73.6 (2.898)	0.91 (2.01)	92*
1SP A1.2	**1.18** (0.07)	240 (3480)	260 (3770)	290 (4205)	6000	7.1 (1.88)	600	0.65 (0.17)	35.35 (1.392)	74.7 (2.941)	0.93 (2.05)	
1SP A1.6	**1.6** (0.10)	240 (3480)	260 (3770)	290 (4205)	6000	9.6 (2.54)	400	0.61 (0.16)	36.20 (1.425)	76.4 (3.008)	0.95 (2.09)	95*
1SP A2.0	**2.0** (0.12)	220 (3190)	250 (3625)	270 (3915)	5500	11 (2.91)	400	0.76 (0.20)	36.95 (1.455)	77.9 (3.067)	0.97 (2.14)	
1SP A2.5	**2.5** (0.15)	220 (3190)	250 (3625)	270 (3915)	5000	12.5 (3.30)	400	0.95 (0.25)	37.95 (1.494)	79.9 (3.146)	1.00 (2.21)	
1SP A3.2	**3.2** (0.20)	210 (3045)	240 (3480)	260 (3770)	4500	14.4 (3.80)	400	1.21 (0.32)	39.30 (1.547)	82.6 (3.252)	1.04 (2.29)	
1SP A3.7	**3.7** (0.23)	210 (3045)	240 (3480)	260 3770	4000	14.8 (3.91)	400	1.40 (0.37)	40.30 (1.587)	84.6 (3.331)	1.07 (2.36)	
1SP A4.2	**4.2** (0.26)	190 (2755)	210 (3045)	230 (3335)	3500	14.7 (3.88)	400	1.60 (0.42)	41.25 (1.624)	86.5 (3.406)	1.10 (2.43)	
1SP A5.0	**5.0** (0.31)	180 (2610)	210 (3045)	230 3335	3000	15 (3.96)	400	1.90 (0.50)	42.80 (1.685)	89.6 (3.528)	1.14 (2.51)	
1SP A6.3	**6.3** (0.38)	170 (2465)	190 (2755)	210 (3045)	2700	17 (4.49)	400	2.39 (0.63)	45.35 (1.785)	94.7 (3.728)	1.22 (2.69)	
1SP A7.8	**7.76** (0.47)	170 (2465)	190 (2755)	210 (3045)	2500	19.4 (5.13)	400	2.95 (0.78)	48.20 (1.898)	100.4 (3.953)	1.30 (2.87)	
1SP A9.8	**9.78** (0.60)	150 (2175)	170 (2465)	190 (2755)	2000	19.6 (5.18)	400	3.71 (0.98)	52.15 (2.053)	108.3 (4.264)	1.41 (3.11)	

** Value collected during the testing at 1500 rpm)*

Example of ordering code

1SP	A	2.0	D	(H)	-	10	GG	0	(VT)

1SP	*Pump type*	*see table*
A	*Flange and cover material*	**A** = *Aluminium*
2.0	*Displacement*	*see table*
D	*Clockwise rotation*	**D** = *Clockwise rotation* **S** = *Anticlockwise rotation*
(H)	*Stiffening seal for low suction pressure*	*(optional)*
— (1)	*Standard flange*	
10	*Shaft type*	**10 - 11 - 13 - 14 - 15 - 27**
GG	*Port connection type*	**GG - NN - TT - UU - NG - TG - UG**
0	*Connections positions*	**0 - 1 - 3 - 4**
(VT)	*Optional*	**(VT)** *Viton seals (optional)* **VLP-I (N)** *Pressure relief valve (page A-27)*

(1) *It is not necessary to indicate STANDARD flange*

Conn *Port Connections*

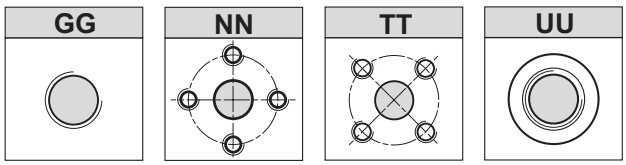

*The sign on the body identifies the **suction side** for the pumps.*

Connection positions

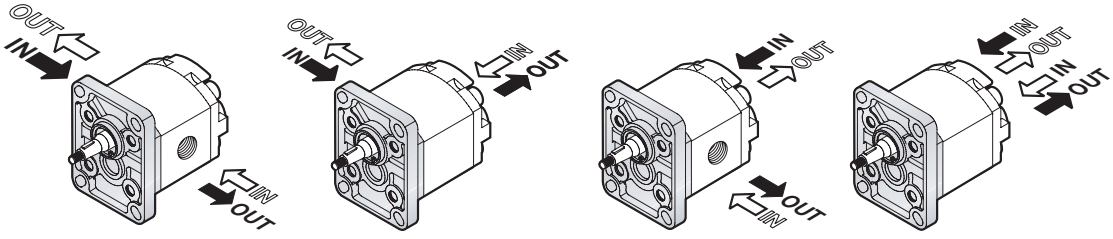

0	1	3	4
(GG - NN - TT - UU)	(GG - NG - TG - UG)	(GG - NG - TG - UG)	(GG)

Rotation	
D	S

SEE PAGE 285 FOR PRICES

Dimensions mm (inch)

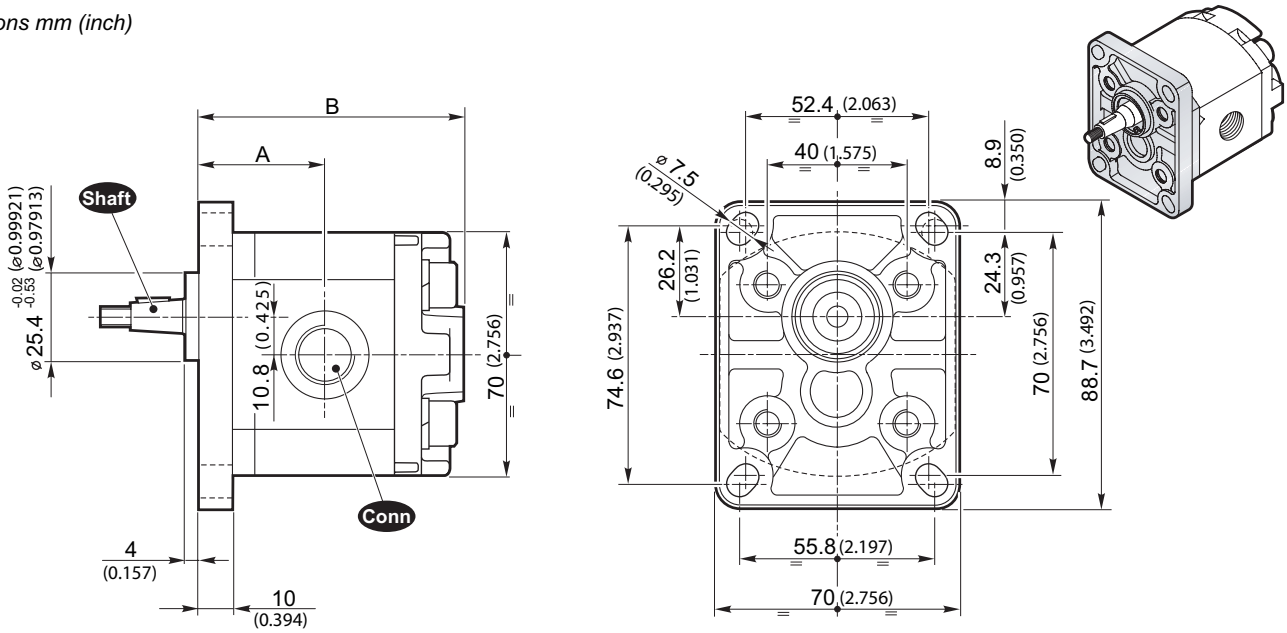

Shaft *Available shafts*

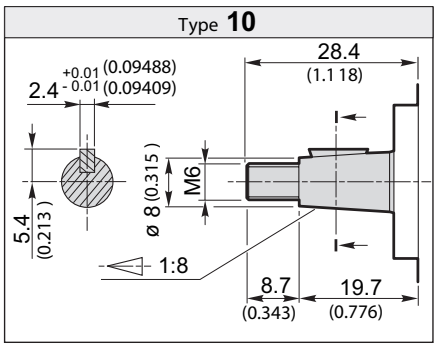

Torque **18 Nm** / ***13.3 ft·lbs***

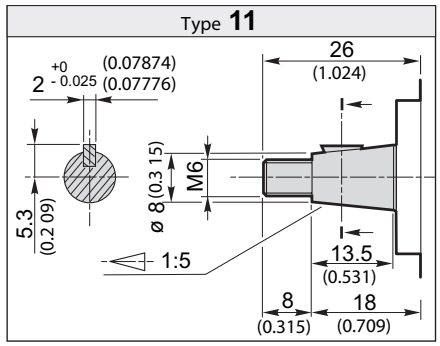

Torque **18 Nm** / ***13.3 ft·lbs***

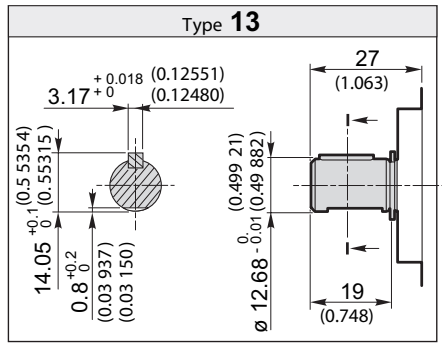

Torque **30 Nm** / ***22.1 ft·lbs***

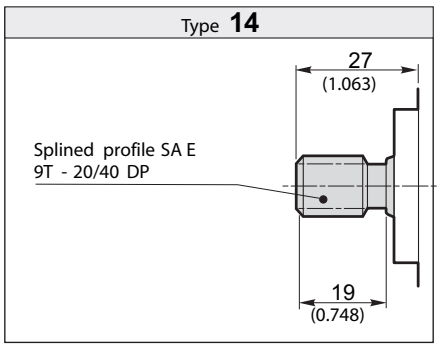

Torque **30 Nm** / ***22.1 ft·lbs***

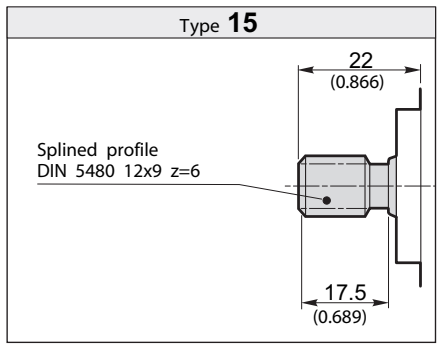

Torque **30 Nm** / ***22.1 ft·lbs***

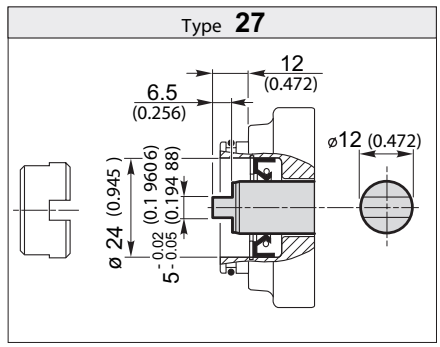

Torque **12 Nm** / ***8.9 ft·lbs***

SEE PAGE 247 FOR PORT SIZES AVAILABLE

SEE PAGE 285 FOR PRICES

50% OFF ALL PRICES

PUMPS GROUP 1 • SAE AA

Technical data

Size	Displacement	Max. working pressure			Max. speed	Max. flow	Min. speed	Min. flow	Dimensions		Mass	Min. volumetric efficiency
		P1	P2	P3					A	B		
	[cm³/rev] (in³/rev)	[bar] (PSI)	[bar] (PSI)	[bar] (PSI)	[g/min] (rpm)	[lt/min] (Gal/min)	[g/min] (rpm)	[lt/min] (Gal/min)	[mm] (inch)	[mm] (inch)	[Kg] (lbs)	%
1SP A0.9	**0.89** (0.05)	240 (3480)	260 (3770)	290 (4205)	6000	5.3 (1.40)	600	0.49 (0.13)	38.3 (1.508)	77.1 (3.035)	0.91 (2.01)	92*
1SP A1.2	**1.18** (0.07)	240 (3480)	260 (3770)	290 (4205)	6000	7.1 (1.88)	600	0.65 (0.17)	38.85 (1.530)	78.2 (3.079)	0.93 (2.05)	
1SP A1.6	**1.6** (0.10)	240 (3480)	260 (3770)	290 (4205)	6000	9.6 (2.54)	400	0.61 (0.16)	39.7 (1.563)	79.9 (3.146)	0.95 (2.09)	95*
1SP A2.0	**2.0** (0.12)	220 (3190)	250 (3625)	270 (3915)	5500	11 (2.91)	400	0.76 (0.20)	40.45 (1.593)	81.4 (3.205)	0.97 (2.14)	
1SP A2.5	**2.5** (0.15)	220 (3190)	250 (3625)	270 (3915)	5000	12.5 (3.30)	400	0.95 (0.25)	41.45 (1.632)	83.4 (3.283)	1.00 (2.21)	
1SP A3.2	**3.2** (0.20)	210 (3045)	240 (3480)	260 (3770)	4500	14.4 (3.80)	400	1.21 (0.32)	42.8 (1.685)	86.1 (3.390)	1.04 (2.29)	
1SP A3.7	**3.7** (0.23)	210 (3045)	240 (3480)	260 3770	4000	14.8 (3.91)	400	1.40 (0.37)	43.8 (1.724)	88.1 (3.469)	1.07 (2.369	
1SP A4.2	**4.2** (0.26)	190 (2755)	210 (3045)	230 (3335)	3500	14.7 (3.88)	400	1.60 (0.42)	44.75 (1.762)	90 (3.543)	1.10 (2.43)	
1SP A5.0	**5.0** (0.31)	180 (2610)	210 (3045)	230 3335	3000	15 (3.96)	400	1.90 (0.50)	46.3 (1.823)	93.1 (3.665)	1.14 (2.51)	
1SP A6.3	**6.3** (0.38)	170 (2465)	190 (2755)	210 (3045)	2700	17 (4.49)	400	2.39 (0.63)	48.85 (1.923)	98.2 (3.866)	1.22 (2.69)	
1SP A7.8	**7.76** (0.47)	170 (2465)	190 (2755)	210 (3045)	2500	19.4 (5.13)	400	2.95 (0.78)	51.7 (2.035)	103.9 (4.091)	1.30 (2.87)	
1SP A9.8	**9.78** (0.60)	150 (2175)	170 (2465)	190 (2755)	2000	19.6 (5.18)	400	3.71 (0.98)	55.65 (2.191)	111.8 (4.402)	1.41 (3.11)	

** Value collected during the testing at 1500 rpm)*

Example of ordering code

1SP	A	2.0	D	SAE AA	(H)	10	GG	0	(VT)

1SP	*Pump type*	*see table*
A	*Flange and cover material*	**A** = *Aluminium*
2.0	*Displacement*	*see table*
D	*Clockwise rotation*	**D** = *Clockwise rotation* **S** = *Anticlockwise rotation*
SAE AA	*Flange type*	**SAE AA**
(H)	*Stiffening seal for low suction pressure*	*(optional)*
—		
10	*Shaft type*	**10 - 11 - 13 - 14 - 15 - 27**
GG	*Connections type*	**GG - NN - TT - UU - NG - TG - UG**
0	*Connections positions*	**0 - 1 - 3 - 4**
(VT)	*Optional*	**(VT)** *Viton seals (optional)* **VLP-I (N)** *Pressure relief valve (page A-27)*

Conn *Port Connections*

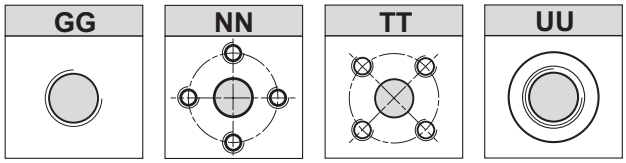

*The sign on the body identifies the **suction side** for the pumps.*

Port Connection positions

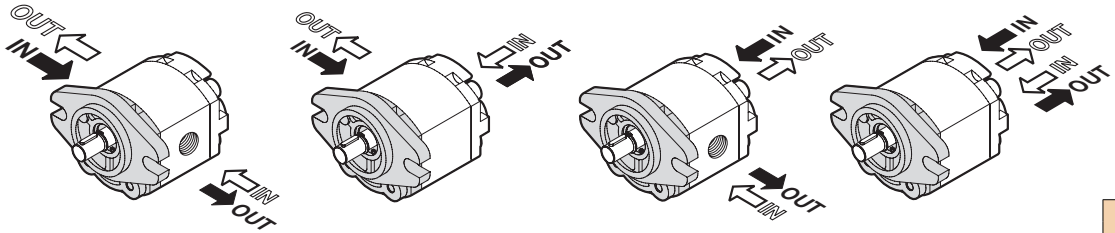

0	1	3	4
(GG - NN - TT - UU)	(GG - NG - TG - UG)	(GG - NG - TG - UG)	(GG)

Rotation	
D	S

SEE PAGE 285 FOR PRICES

Dimensions

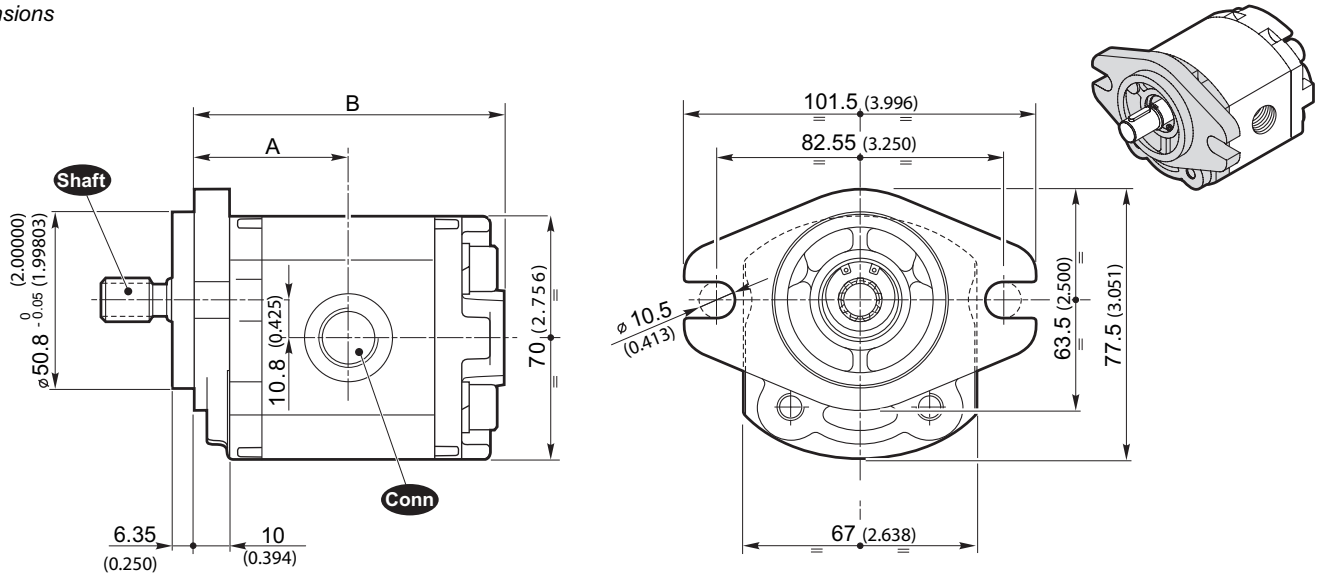

Shaft *Available shafts*

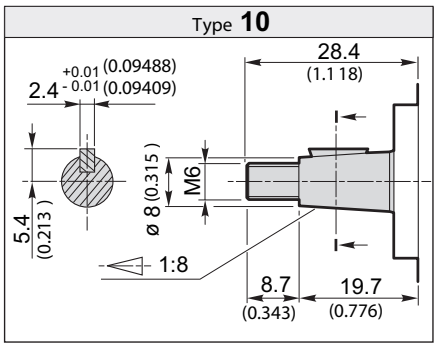

Torque **18 Nm** / ***13.3 ft·lbs***

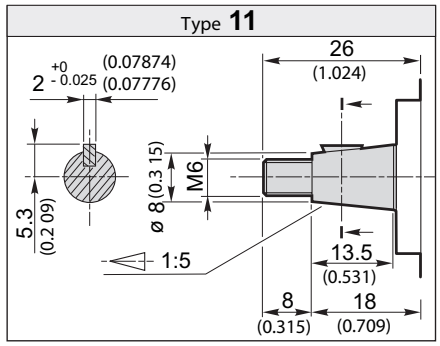

Torque **18 Nm** / ***13.3 ft·lbs***

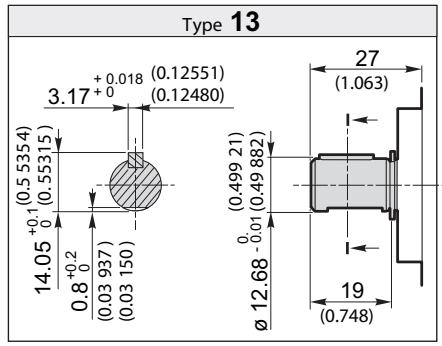

Torque **30 Nm** / ***22.1 ft·lbs***

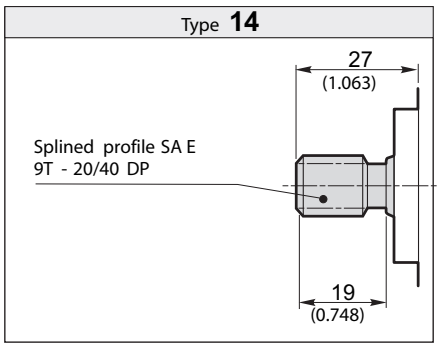

Toruqe **30 Nm** / ***22.1 ft·lbs***

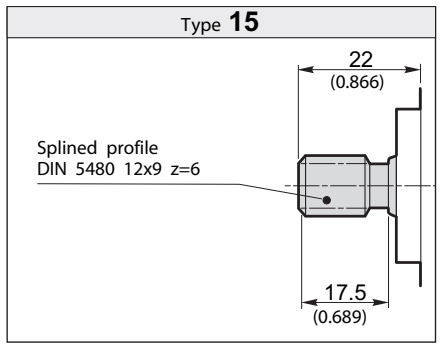

Torque **30 Nm** / ***22.1 ft lbs***

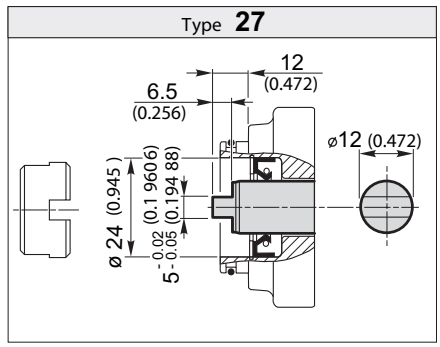

Torque **12 Nm** / ***8.9 ft·lbs***

SEE PAGE 247 FOR PORT SIZES AVAILABLE

SEE PAGE 285 FOR PRICES

50% OFF ALL PRICES

Power-pack

Technical data

Size	Displacement	Max. working pressure			Max. speed	Max. flow	Min. speed	Min. flow	Dimensions			Mass	Min. volumetric efficiency
		P1	P2	P3					A	B	L (1)		
	[cm³/rev] (in³/rev)	[bar] (PSI)	[bar] (PSI)	[bar] (PSI)	[g/min] (rpm)	[lt/min] (Gal/min)	[g/min] (rpm)	[lt/min] (Gal/min)	[mm] (inch)	[mm] (inch)	[mm] (inch)	[Kg] (lbs)	%
1SP A0.9	**0.89** (0.05)	210 (3045)	240 (3480)	260 (3770)	6000	5.3 (1.40)	600	0.49 (0.13)	73.1 (2.878)	61.6 (2.425)	80 (3.150)	0.91 (2.01)	92*
1SP A1.2	**1.18** (0.07)	210 (3045)	240 (3480)	260 (3770)	6000	7.1 (1.88)	600	0.65 (0.17)	74.2 (2.921)	62.7 (2.469)	80 (3.150)	0.93 (2.05)	
1SP A1.6	**1.6** (0.10)	210 (3045)	240 (3480)	260 (3770)	6000	9.6 (2.54)	400	0.61 (0.16)	75.9 (2.988)	64.4 (2.535)	80 (3.150)	0.95 (2.09)	95*
1SP A2.0	**2.0** (0.12)	210 (3045)	240 (3480)	260 (3770)	5500	11 (2.91)	400	0.76 (0.20)	77.4 (3.047)	65.9 (2.594)	80 (3.150)	0.97 (2.14)	
1SP A2.5	**2.5** (0.15)	210 (3045)	240 (3480)	260 (3770)	5000	12.5 (3.30)	400	0.95 (0.25)	79.4 (3.126)	67.9 (2.673)	85 (3.346)	1.00 (2.21)	
1SP A3.2	**3.2** (0.20)	200 (2900)	230 (3335)	250 (3625)	4500	14.4 (3.80)	400	1.21 (0.32)	82.1 (3.232)	70.6 (2.780)	85 (3.346)	1.04 (2.29)	
1SP A3.7	**3.7** (0.23)	200 (2900)	230 (3335)	250 (3625)	4000	14.8 (3.91)	400	1.40 (0.37)	84.1 (3.311)	72.6 (2.858)	90 (3.543)	1.07 (2.36)	
1SP A4.2	**4.2** (0.26)	180 (2610)	210 (3045)	230 (3335)	3500	14.7 (3.88)	400	1.60 (0.42)	86 (3.386)	74.5 (2.933)	90 (3.543)	1.10 (2.43)	
1SP A5.0	**5.0** (0.31)	180 (2610)	210 (3045)	230 (3335)	3000	15 (3.96)	400	1.90 (0.50)	89.1 (3.508)	77.6 (3.055)	95 (3.740)	1.14 (2.51)	
1SP A6.3	**6.3** (0.38)	170 (2465)	190 (2755)	210 (3045)	2700	17 (4.49)	400	2.39 (0.63)	94.2 (3.709)	82.7 (3.256)	100 (3.937)	1.22 (2.69)	
1SP A7.8	**7.76** (0.47)	170 (2465)	190 (2755)	210 (3045)	2500	19.4 (5.13)	400	2.95 (0.78)	99.9 (3.933)	88.4 (3.480)	105 (4.134)	1.30 (2.87)	
1SP A9.8	**9.78** (0.60)	150 (2175)	170 (2465)	190 (2755)	2000	19.6 (5.18)	400	3.71 (0.98)	107.8 (4.244)	96.3 (3.791)	115 (4.528)	1.41 (3.11)	

** Value collected during the testing at 1500 rpm)*

Example of ordering code

1SP	A	3.7	D	MC 32	-	27	G05	(VT)

1SP	*Pump type*	*see table*
A	*Flange and cover material*	**A** = *Aluminium*
3.7	*Displacement*	*see table*
D	*Clockwise rotation*	**D** = *Clockwise rotation* **S** = *Anticlockwise rotation*
MC 32	*Flange type*	**MC 32**
—		
27	*Shaft type*	**27 - 10 - 11 - 15**
G05	*Connections type and position*	**G05 - G02 - N02 - T02 - U02**
(VT)	*Optional*	**(VT)** *Viton seals (optional)*

Conn *Port Connections type and position*

Rotation	
D	S

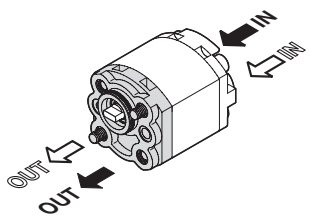

G05

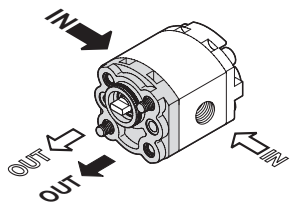

G02 - N02
T02 - U02

SEE PAGE 285 FOR PRICES

Power-pack

Dimensions

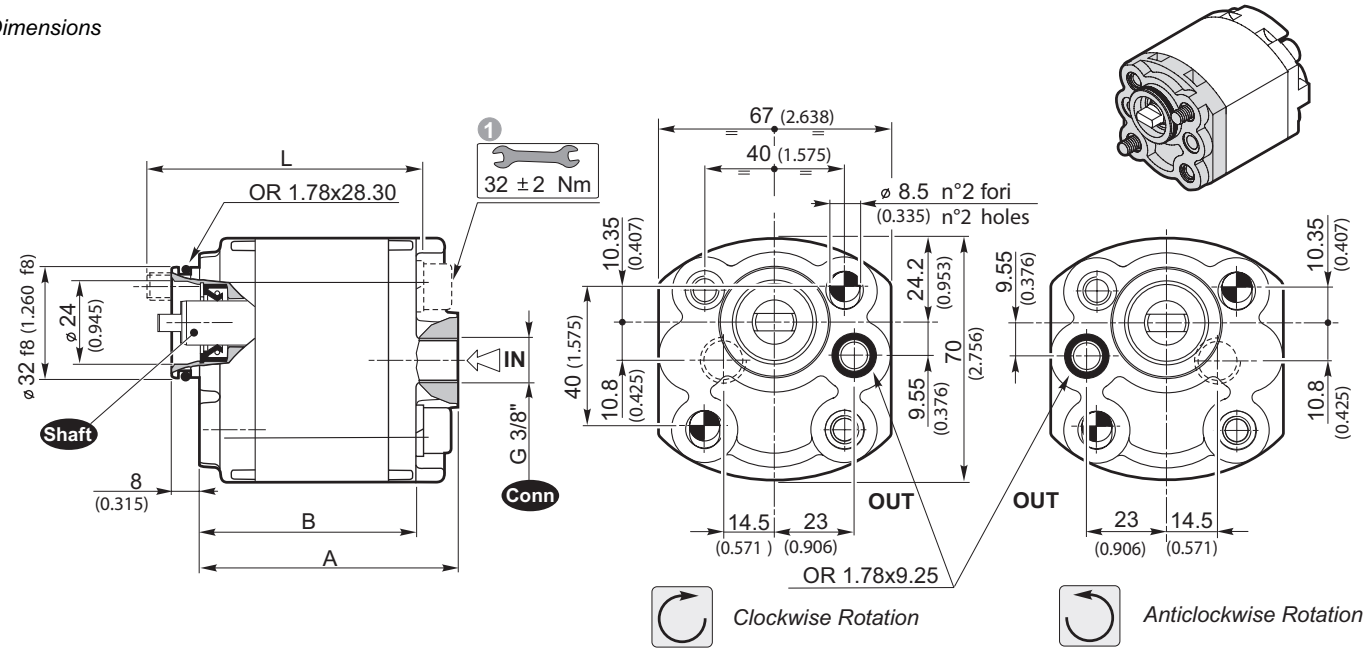

Shaft *Available shafts*

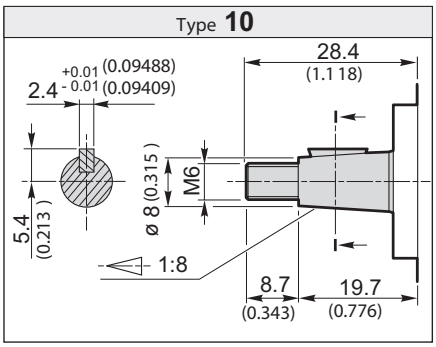

Torque **18 Nm** / ***13.3 ft·lbs***

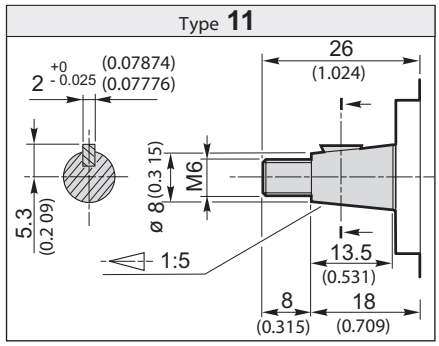

Torque **18 Nm** / ***13.3 ft·lbs***

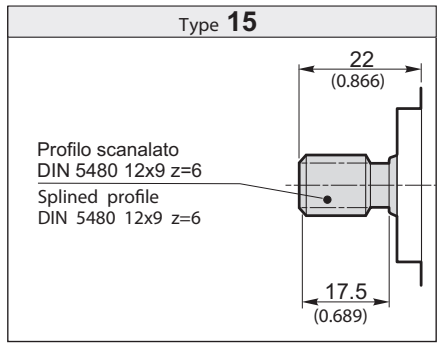

Torque **30 Nm** / ***22.1 ft·lbs***

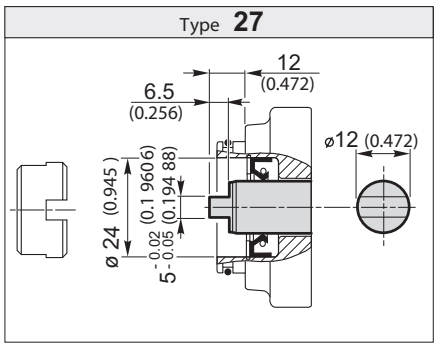

Torque **12 Nm** / ***8.9 ft·lbs***

SEE PAGE 247 FOR PORT SIZES AVAILABLE

1

Tightening torque of screws: 283 ± 18 lb-in. Use screws type 10.9 - 12.9 UNI EN 20898/1.
The screws kit for the pump assembling should be ordered separately.
Ordering code of assembling Kit:

***L** (see table)*

The assembling of the pump should be effected by 2 screw studs type 10.9 - 12.9 pre-tighten at 221 ± 18 lb-in.
Fix the pump by self-locking nuts with tightening torque 283 ± 18 lb-in.

The rotation direction shall be specified while issuing the order because this kind of operation must necessarily be carried out at our premises.

SEE PAGE 285 FOR PRICES

50% OFF ALL PRICES

PUMPS GROUP 1 • E 32 BX

Technical data

(Power-pack fixing)

Size	Displacement	Max. working pressure			Max. speed	Max. flow	Min. speed	Min. flow	Dimensions				Mass	Min. volumetric efficiency
		P1	P2	P3					A	B	C	L (1)		
	[cm³/rev] (in³/rev)	[bar] (PSI)	[bar] (PSI)	[bar] (PSI)	[g/min] (rpm)	[lt/min] (Gal/min)	[[g/min] (rpm)	[lt/min] (Gal/min)	[mm] (inch)	[mm] (inch)	[mm] (inch)	[mm] (inch)	[Kg] (lbs)	%
1SP A0.9	**0.89** (0.05)	210 (3045)	240 (3480)	260 (3770)	6000	5.3 (1.40)	600	0.49 (0.13)	73.6 (2.898)	34.8 (1.370)	61.6 (2.425)	80 (3.150)	0.91 (2.01)	92*
1SP A1.2	**1.18** (0.07)	210 (3045)	240 (3480)	260 (3770)	6000	7.1 (1.88)	600	0.65 (0.17)	74.7 (2.941)	35.35 (1.392)	62.7 (2.469)	80 (3.150)	0.93 (2.05)	
1SP A1.6	**1.6** (0.10)	210 (3045)	240 (3480)	260 (3770)	6000	9.6 (2.54)	400	0.61 (0.16)	76.4 (3.008)	36.2 (1.425)	64.4 (2.535)	80 (3.150)	0.95 (2.09)	95*
1SP A2.0	**2.0** (0.12)	210 (3045)	240 (3480)	260 (3770)	5500	11 (2.91)	400	0.76 (0.20)	77.9 (3.067)	36.95 (1.455)	65.9 (2.594)	80 (3.150)	0.97 (2.14)	
1SP A2.5	**2.5** (0.15)	210 (3045)	240 (3480)	260 (3770)	5000	12.5 (3.30)	400	0.95 (0.25)	79.9 (3.146)	37.95 (1.494)	67.9 (2.673)	85 (3.346)	1.00 (2.21)	
1SP A3.2	**3.2** (0.20)	200 (2900)	230 (3335)	250 (3625)	4500	14.4 (3.80)	400	1.21 (0.32)	82.6 (3.252)	39.3 (1.547)	70.6 (2.780)	85 (3.346)	1.04 (2.29)	
1SP A3.7	**3.7** (0.23)	200 (2900)	230 (3335)	250 (3625)	4000	14.8 (3.91)	400	1.40 (0.37)	84.6 (3.331)	40.3 (1.587)	72.6 (2.858)	90 (3.543)	1.07 (2.36)	
1SP A4.2	**4.2** (0.26)	180 (2610)	210 (3045)	230 (3335)	3500	14.7 (3.88)	400	1.60 (0.42)	86.5 (3.406)	41.25 (1.624)	74.5 (2.933)	90 (3.543)	1.10 (2.43)	
1SP A5.0	**5.0** (0.31)	180 (2610)	210 (3045)	230 (3335)	3000	15 (3.96)	400	1.90 (0.50)	89.6 (3.528)	42.8 (1.685)	77.6 (3.055)	95 (3.740)	1.14 (2.51)	
1SP A6.3	**6.3** (0.38)	170 (2465)	190 (2755)	210 (3045)	2700	17 (4.49)	400	2.39 (0.63)	94.7 (3.728)	45.35 (1.785)	82.7 (3.256)	100 (3.937)	1.22 (2.69)	
1SP A7.8	**7.76** (0.47)	170 (2465)	190 (2755)	210 (3045)	2500	19.4 (5.13)	400	2.95 (0.78)	100.4 (3.953)	48.2 (1.898)	88.4 (3.480)	105 (4.134)	1.30 (2.87)	
1SP A9.8	**9.78** (0.60)	150 (2175)	170 (2465)	190 (2755)	2000	19.6 (5.18)	400	3.71 (0.98)	108.3 (4.264)	52.15 (2.053)	96.3 (3.791)	115 (4.528)	1.41 (3.11)	

** Value collected during the testing at 1500 rpm)*

Example of ordering code

1SP	A	3.7	D	E32 BX	-	17	GG	0	(VT)

1SP	*Pump type*	*see table*
A	*Flange and cover material*	**A** = *Aluminium*
3.7	*Displacement*	*see table*
D	*Clockwise rotation*	**D =** *Clockwise rotation* **S** = *Anticlockwise rotation*
E 32 BX	*Flange type*	**E 32 BX**
—		
17	*Shaft type*	**17 - M32**
GG	*Connections type*	**GG - NN - TT - UU - NG - TG - UG**
0	*Connections positions*	**0 - 1 - 3 - 4**
(VT)	*Optional*	**(VT)** *Viton seals (optional)* **VLP-I (N)** *Pressure relief valve (page A-27)*

Conn *Port Connections*

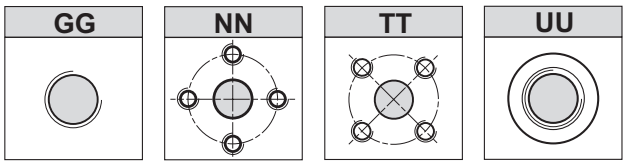

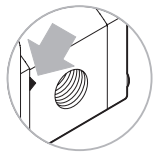

*The sign on the body identifies the **suction side** for the pumps.*

Port Connection positions

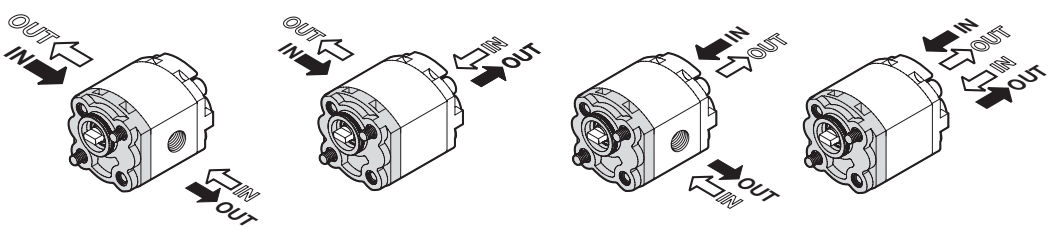

0	1	3	4
(GG - NN - TT - UU)	(GG - NG - TG - UG)	(GG - NG - TG - UG)	(GG)

Rotation	
D	S

SEE PAGE 285 FOR PRICES

(Power-pack fixing)

Dimensions

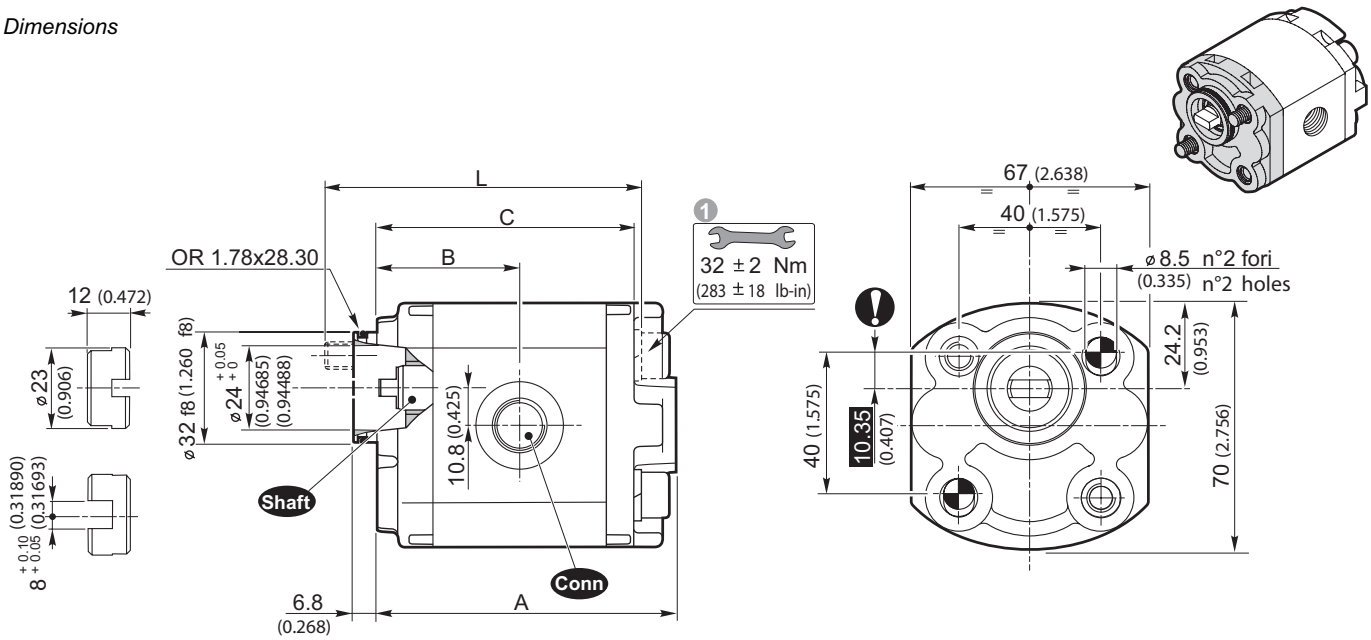

Shaft *Available shafts*

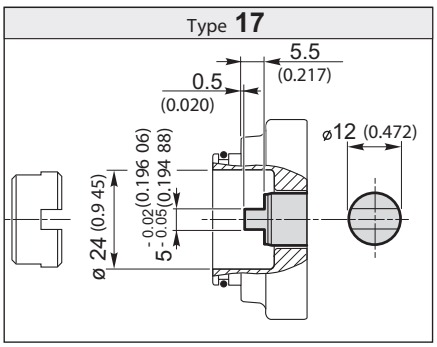

Torque **12 Nm** / ***8.9 ft·lbs***

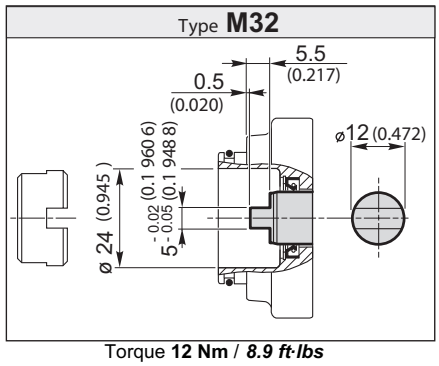

Torque **12 Nm** / ***8.9 ft·lbs***

SEE PAGE 247 FOR PORT SIZES AVAILABLE

1

Tightening torque of screws: 283 ± 18 lb-in. Use screws type 10.9 - 12.9 UNI EN 20898/1.
The screws kit for the pump assembling should be ordered separately.
Ordering code of assembling Kit:

0019W *+ Length **L** (see table)*

The assembling of the pump should be effected with 2 screw studs type 10.9 - 12.9 pre-tighten at 221 ± 18 lb-in.
Fix the pump by self-locking nuts with tightening torque 283 ± 18 lb-in.

SEE PAGE 285 FOR PRICES

50% OFF ALL PRICES

PUMPS GROUP 1 • E 32 CX

Technical data

Size	Displacement	Max. working pressure			Max. speed	Max. flow	Min. speed	Min. flow	Dimensions				Mass	Min. volumetric efficiency
		P1	P2	P3					A	B	C	L (1)		
	[cm³/rev] (in³/rev)	[bar] (PSI)	[bar] (PSI)	[bar] (PSI)	[g/min] (rpm)	[lt/min] (Gal/min)	[g/min] (rpm)	[lt/min] (Gal/min)	[mm] (inch)	[mm] (inch)	[mm] (inch)	[mm] (inch)	[Kg] (lbs)	%
1SP A0.9	**0.89** (0.05)	210 (3045)	240 (3480)	260 (3770)	6000	5.3 (1.40)	600	0.49 (0.13)	73.6 (2.898)	34.8 (1.370)	61.6 (2.425)	80 (3.150)	0.91 (2.01)	92*
1SP A1.2	**1.18** (0.07)	210 (3045)	240 (3480)	260 (3770)	6000	7.1 (1.88)	600	0.65 (0.17)	74.7 (2.941)	35.35 (1.392)	62.7 (2.469)	80 (3.150)	0.93 (2.05)	
1SP A1.6	**1.6** (0.10)	210 (3045)	240 (3480)	260 (3770)	6000	9.6 (2.54)	400	0.61 (0.16)	76.4 (3.008)	36.2 (1.425)	64.4 (2.535)	80 (3.150)	0.95 (2.09)	95*
1SP A2.0	**2.0** (0.12)	210 (3045)	240 (3480)	260 (3770)	5500	11 (2.91)	400	0.76 (0.20)	77.9 (3.067)	36.95 (1.455)	65.9 (2.594)	80 (3.150)	0.97 (2.14)	
1SP A2.5	**2.5** (0.15)	210 (3045)	240 (3480)	260 (3770)	5000	12.5 (3.30)	400	0.95 (0.25)	79.9 (3.146)	37.95 (1.494)	67.9 (2.673)	85 (3.346)	1.00 (2.21)	
1SP A3.2	**3.2** (0.20)	200 (2900)	230 (3335)	250 (3625)	4500	14.4 (3.80)	400	1.21 (0.32)	82.6 (3.252)	39.3 (1.547)	70.6 (2.780)	85 (3.346)	1.04 (2.29)	
1SP A3.7	**3.7** (0.23)	200 (2900)	230 (3335)	250 (3625)	4000	14.8 (3.91)	400	1.40 (0.37)	84.6 (3.331)	40.3 (1.587)	72.6 (2.858)	90 (3.543)	1.07 (2.36)	
1SP A4.2	**4.2** (0.26)	180 (2610)	210 (3045)	230 (3335)	3500	14.7 (3.88)	400	1.60 (0.42)	86.5 (3.406)	41.25 (1.624)	74.5 (2.933)	90 (3.543)	1.10 (2.43)	
1SP A5.0	**5.0** (0.31)	180 (2610)	210 (3045)	230 (3335)	3000	15 (3.96)	400	1.90 (0.50)	89.6 (3.528)	42.8 (1.685)	77.6 (3.055)	95 (3.740)	1.14 (2.51)	
1SP A6.3	**6.3** (0.38)	170 (2465)	190 (2755)	210 (3045)	2700	17 (4.49)	400	2.39 (0.63)	94.7 (3.728)	45.35 (1.785)	82.7 (3.256)	100 (3.937)	1.22 (2.69)	
1SP A7.8	**7.76** (0.47)	170 (2465)	190 (2755)	210 (3045)	2500	19.4 (5.13)	400	2.95 (0.78)	100.4 (3.953)	48.2 (1.898)	88.4 (3.480)	105 (4.134)	1.30 (2.87)	
1SP A9.8	**9.78** (0.60)	150 (2175)	170 (2465)	190 (2755)	2000	19.6 (5.18)	400	3.71 (0.98)	108.3 (4.264)	52.15 (2.053)	96.3 (3.791)	115 (4.528)	1.41 (3.11)	

** Value collected during the testing at 1500 rpm)*

Example of ordering code

1SP	A	3.7	D	E32 CX	-	17	GG	0	(VT)

1SP	*Pump type*	*see table*
A	*Flange and cover material*	**A** = *Aluminium*
3.7	*Displacement*	*see table*
D	*Clockwise rotation*	**D** = *Clockwise rotation* **S** = *Anticlockwise rotation*
E 32 CX	*Flange type*	**E 32 CX**
—		
17	*Shaft type*	**17 - M32**
GG	*Connections type*	**GG - NN - TT - UU - NG - TG - UG**
0	*Connections positions*	**0 - 1 - 3 - 4**
(VT)	*Optional*	**(VT)** *Viton seals (optional)* **VLP-I (N)** *Pressure relief valve (page A-27)*

Conn *Port Connections*

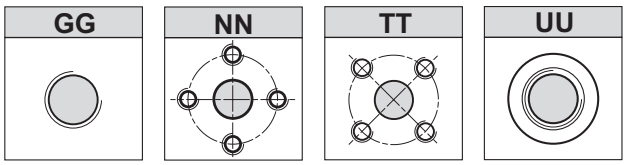

*The sign on the body identifies the **suction side** for the pumps.*

Port Connection positions

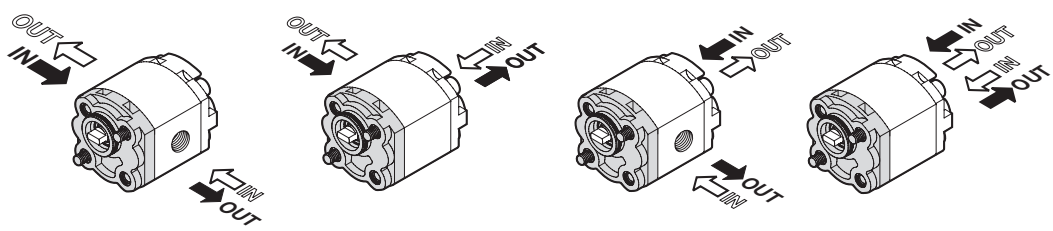

0	1	3	4
(GG - NN - TT - UU)	(GG - NG - TG - UG)	(GG - NG - TG - UG)	(GG)

Rotation	
D	S

SEE PAGE 285 FOR PRICES

Dimensions

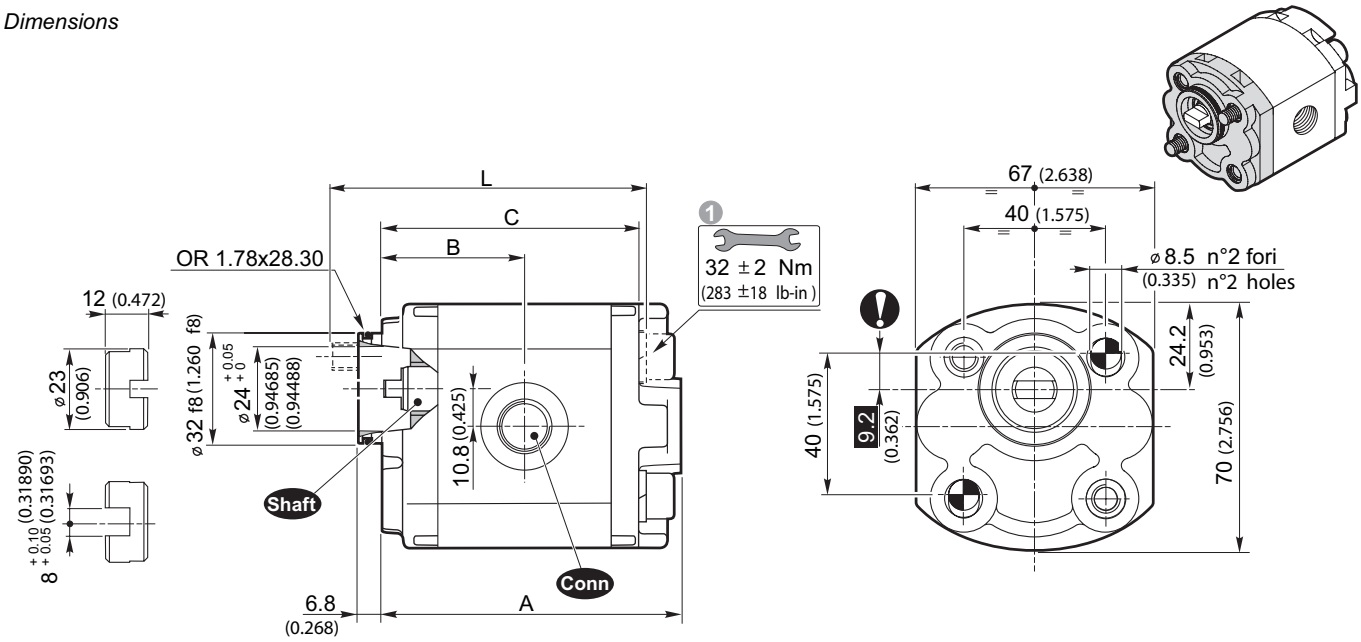

Shaft *Available shafts*

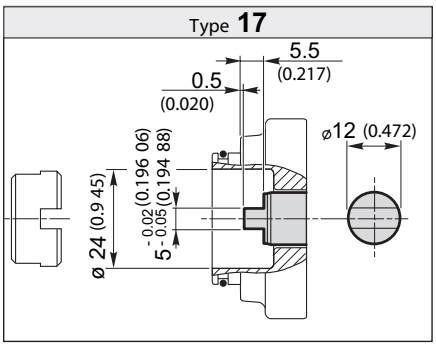

Torque **12 Nm** / ***8.9 ft·lbs***

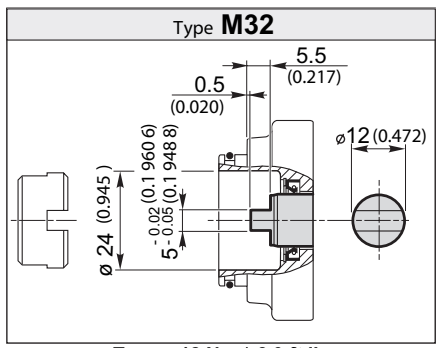

Torque **12 Nm** / ***8.9 ft·lbs***

SEE PAGE 247 FOR PORT SIZES AVAILABLE

1

Tightening torque of screws: 283 ± 18 lb-in. Use screws type 10.9 - 12.9 UNI EN 20898/1.
The screws kit for the pump assembling should be ordered separately.
Ordering code of assembling Kit:

0019W *+ Length **L** (see table)*

The assembling of the pump should be effected with 2 screw studs type 10.9 - 12.9 pre-tighten at 221 ± 18 lb-in.
Fix the pump by self-locking nuts with tightening torque 283 ± 18 lb-in.

SEE PAGE 285 FOR PRICES

50% OFF ALL PRICES

NN

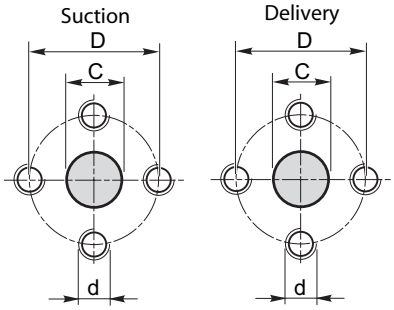

Size 0.9 ÷ 2.0		
C	D	d
10 (0.394)	26 (1.024)	M5

Size 2.5 ÷ 9.8		
C	D	d
13 (0.512)	30 (1.181)	M6

GG

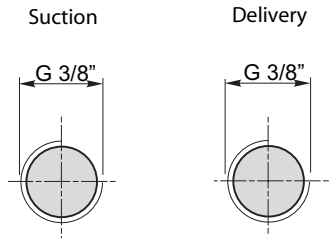

TT

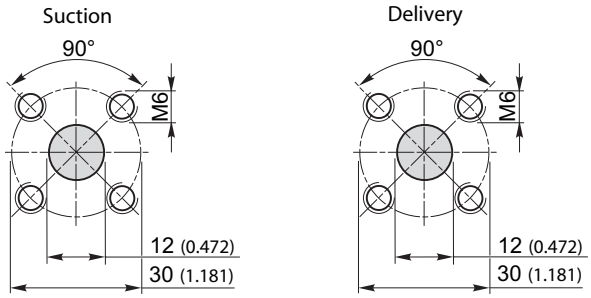

UU

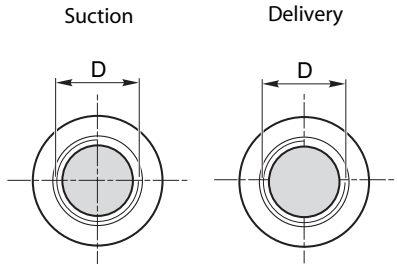

Size 0.9 ÷ 2.0
D
9/16 - 18UNF

Size 2.5 ÷ 9.8
D
3/4 - 16UNF

GG4

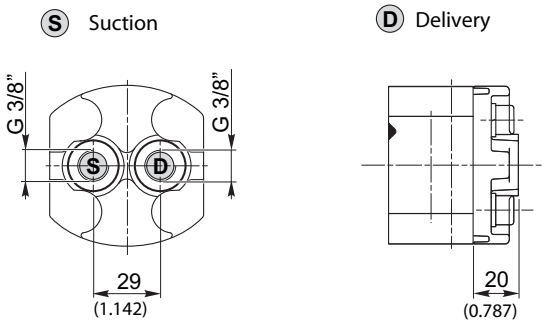

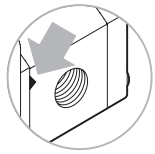

*The sign on the body identifies the **suction side** for the pumps.*

Port Connection positions

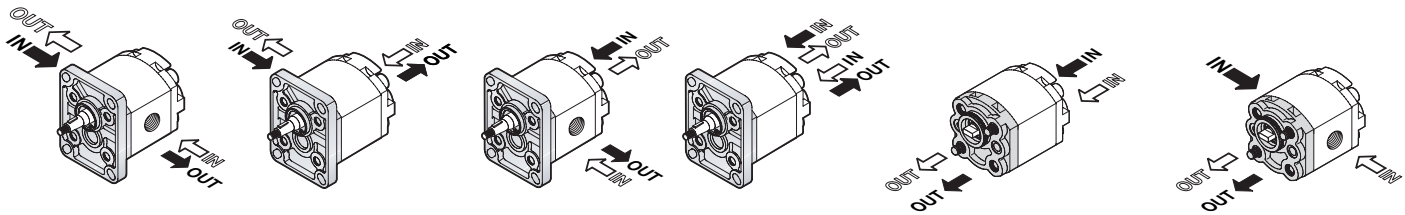

0	1	3	4	G05	G02 - N02 T02 - U02
For versions Standard - SAE AA - E32 BX - E32 CX				Only for MC 32	

Rotation	
D	S
⬅	➡

SEE PAGE 285 FOR PRICES

VLP- I (N)

Pressure relief valve

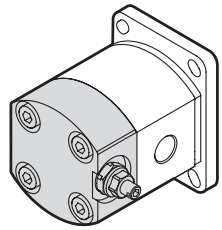

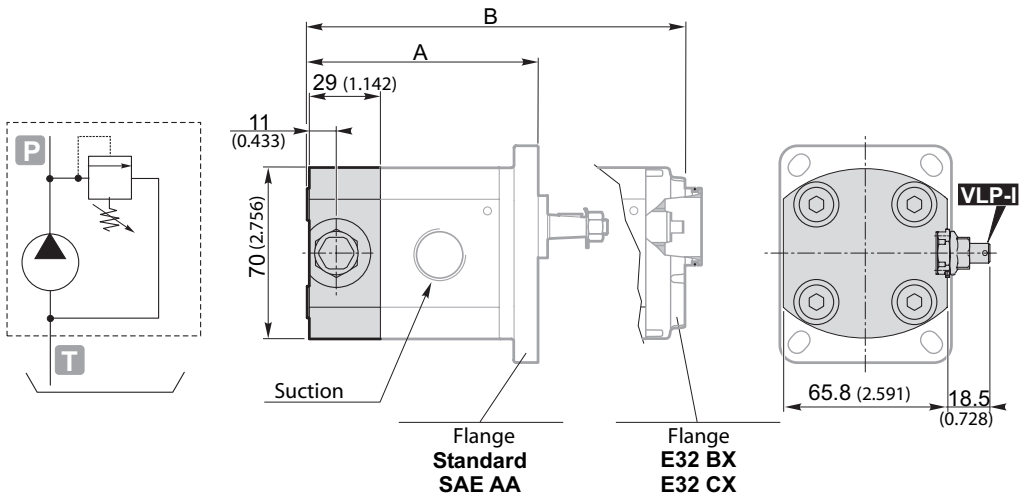

	A		B
	Standard	SAE AA	E32 BX E32 CX
1SP A0.9	82.6 *(3.252)*	86.1 *(3.390)*	82.6 *(3.252)*
1SP A1.2	83.7 *(3.295)*	87.2 *(3.433)*	83.7 *(3.295)*
1SP A1.6	85.4 *(3.362)*	88.9 *(3.500)*	85.4 *(3.362)*
1SP A2.0	86.9 *(3.421)*	90.4 *(3.559)*	86.9 *(3.421)*
1SP A2.5	88.9 *(3.500)*	92.4 *(3.638)*	88.9 *(3.500)*
1SP A3.2	91.6 *(3.606)*	95.1 *(3.744)*	91.6 *(3.606)*
1SP A3.7	93.6 *(3.685)*	97.1 *(3.823)*	93.6 *(3.685)*
1SP A4.2	95.5 *(3.760)*	99.0 *(3.898)*	95.5 *(3.760)*
1SP A5.0	98.6 *(3.882)*	102.1 *(4.020)*	98.6 *(3.882)*
1SP A6.3	103.7 *(4.083)*	107.2 *(4.220)*	103.7 *(4.083)*
1SP A7.8	109.4 *(4.307)*	112.9 *(4.445)*	109.4 *(4.307)*
1SP A9.8	117.3 *(4.618)*	120.8 *(4.756)*	117.3 *(4.618)*

Warning.
The pressure relief valve can be applied by substituting the rear cover (only internal relief is set).

The opening of the pressure relief valve should be carry out for times not over 10" each minute to avoid the overheating of the pump.

Esempio di ordinazione in codice / *Example of ordering code*

1SP	A	2.5	D	SAE AA	-	10	GG0	VLP-I	(N)

VLP-I	*Cover with VPL at internal exhaust*	**VPL-I**
(N)	*Spring type*	**B - N - G - R** *(See table)*

		Spring type			
		B	**N**	**G**	**R**
		white spring	*black spring*	*yellow spring*	*red spring*
*Calibration fields**	[bar] (psi)	30 ÷ 80 *(435 ÷ 1160)*	81 ÷ 200 *(1175 ÷ 2900)*	201 ÷ 300 *(2915 ÷ 4350)*	301 ÷ 400 *(4365 ÷ 5800)*

**** Without setting request, it will be considered standard (black spring: 1740 psi).***

SEE PAGE 285 FOR PRICES

50% OFF ALL PRICES

Flange and cover in Aluminium

Technical data

Size	Displacement [cm³/rev] (in³/rev)	Max. working pressure P1 [bar] (PSI)	P2 [bar] (PSI)	P3 [bar] (PSI)	Max. speed [g/min] (rpm)	Max. flow [lt/min] (Gal/min)	Min. speed [g/min] (rpm)	Min. flow [lt/min] (Gal/min)	Dimensions A [mm] (inch)	B [mm] (inch)	Mass [Kg] (lbs)	Min. volumetric efficiency %
2SP A4	**4** (0.24)	250 (3625)	270 (3915)	290 (4205)	4000	16 (4.23)	500	1.9 (0.50)	44.4 (1.748)	93 (3.661)	2.30 (5.07)	95*
2SP A6	**6** (0.37)	250 (3625)	270 (3915)	290 (4205)	4000	24 (6.34)	500	2.85 (0.75)	46 (1.811)	96.3 (3.791)	2.45 (5.40)	
2SP A8	**8.5** (0.52)	250 (3625)	270 (3915)	290 (4205)	3500	29.7 (7.85)	500	4.03 (1.06)	48.1 (1.894)	100.5 (3.957)	2.60 (5.73)	
2SP A11	**11** (0.67)	250 (3625)	270 (3915)	290 (4205)	3500	38.5 (10.17)	500	5.22 (1.38)	50.2 (1.976)	104.6 (4.118)	2.70 (5.95)	
2SP A14	**14** (0.85)	250 (3625)	270 (3915)	290 (4205)	3500	49 (12.95)	500	6.65 (1.76)	52.7 (2.075)	109.6 (4.315)	2.80 (6.17)	
2SP A16	**16.5** (1.01)	230 (3335)	240 (3480)	250 (3625)	3500	57.7 (15.24)	500	7.83 (2.07)	54.8 (2.157)	113.8 (4.480)	2.95 (6.51)	
2SP A19	**19.5** (1.19)	210 (3045)	220 (3190)	230 (3335)	3300	64.3 (16.99)	500	9.26 (2.45)	57.3 (2.256)	118.8 (4.677)	3.10 (6.84)	
2SP A22	**22.5** (1.37)	190 (2755)	200 (2900)	210 (3045)	2800	63 (16.64)	500	10.68 (2.82)	59.8 (2.354)	123.8 (4.874)	3.25 (7.17)	
2SP A26	**26** (1.59)	170 (2465)	180 (2610)	190 (2755)	2500	65 (17.17)	500	12.35 (3.26)	62.7 (2.469)	129.6 (5.102)	3.40 (7.50)	

** Value collected during the testing at 1500 rpm)*

Example of ordering code

2SP	A	14	D		(H)	-	10	G	(VT)

2SP	*Pump type*	*see table*
A	*Flange and cover*	**A** = *Aluminium*
14	*Displacement*	*see table*
D	*Clockwise rotation*	**D** = *Clockwise rotation* **S** = *Anticlockwise rotation*
— [1]	*Flange type*	
(H)	*Stiffening seal for low suction pressure*	*(optional)*
—		
10	*Shaft type*	**10 - 11 - 12 - 13 - 14 - 15 - 16**
G	*Connections type*	**G - N - T - M - U - W - F**
(VT)	*Optional*	**(VT)** *Viton seals (optional)* **VLP-I (N) - VLP-E (N)** *Pressure relief valve (page A-49)*

[1] *It is not necessary to indicate STANDARD flange*

Conn *Port Connections*

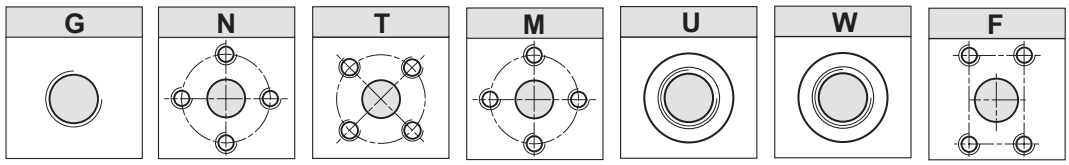

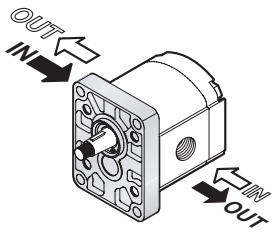

*The sign on the body identifies the **suction side** for the pumps.*

Rotation	
D	S
←	→

SEE PAGE 285 FOR PRICES

Flange and cover in Aluminium

Dimensions

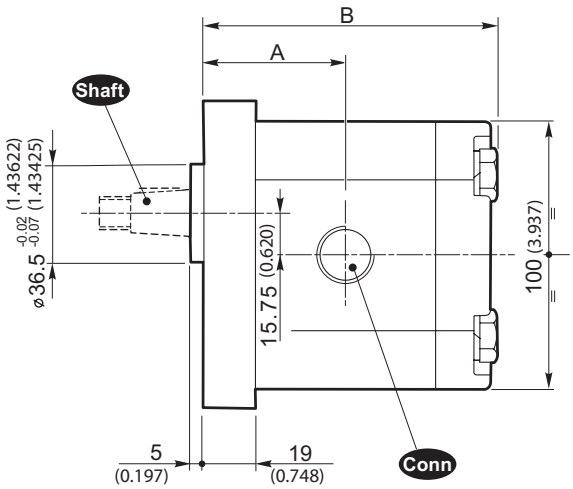

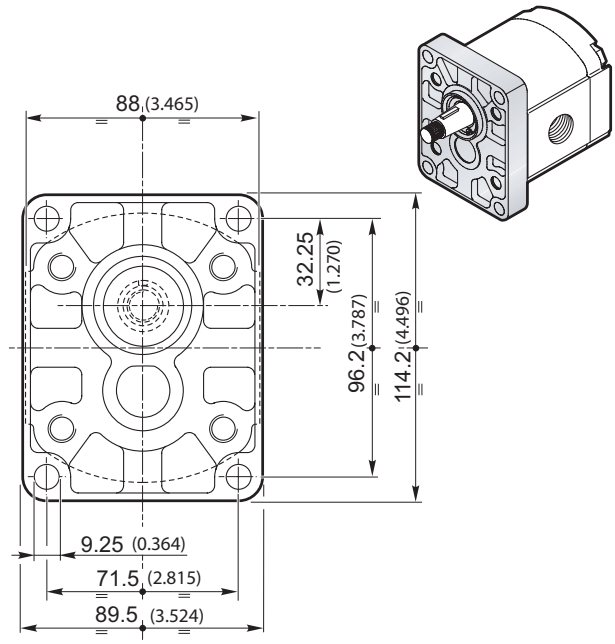

Shaft *Available shafts*

Type **10**

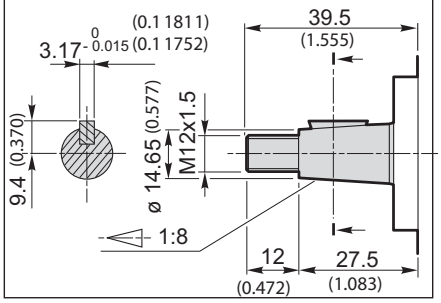

Torque **98 Nm** / ***72.3 ft·lbs***

Type **11**

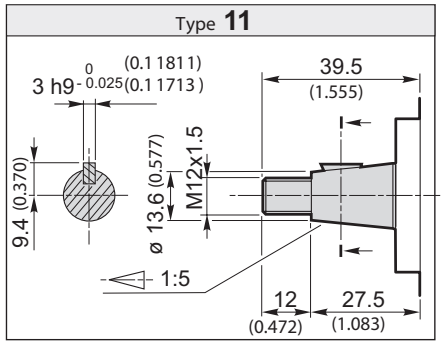

Torque **98 Nm** / ***72.3 ft·lbs***

Type **12**

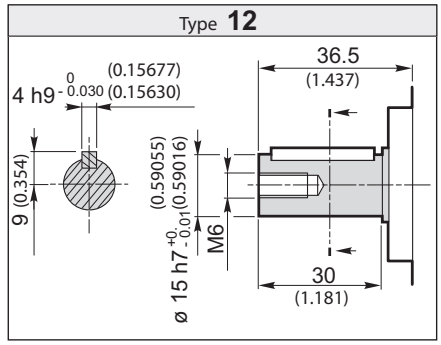

Torque **98 Nm** / ***72.3 ft·lbs***

Type **13**

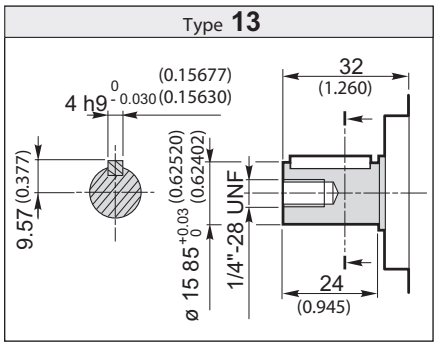

Torque **98 Nm** / ***72.3 ft·lbs***

Type **14**

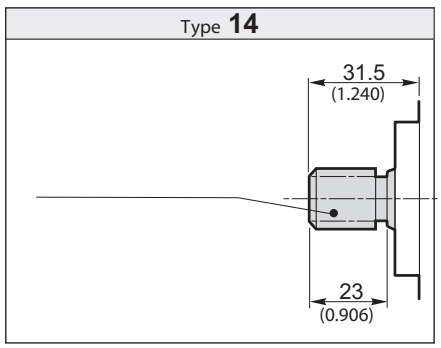

Torque **98 Nm** / ***72.3 ft·lbs***

Type **15**

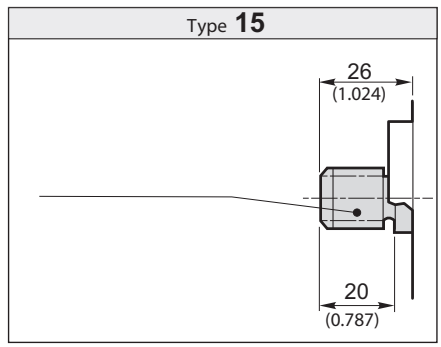

Torque **98 Nm** / ***72.3 ft·lbs***

Type **16**

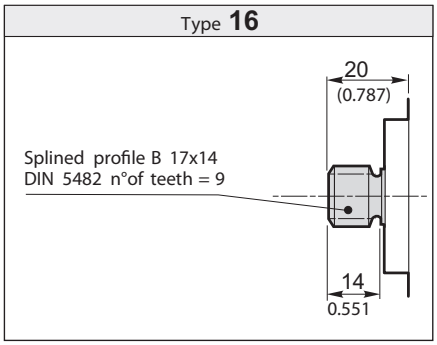

Torque **98 Nm** / ***72.3 ft·lbs***

SEE PAGE 269 FOR PORT SIZES AVAILABLE

SEE PAGE 285 FOR PRICES

Flange and cover in Cast iron

Technical data

Size	Displacement [cm³/rev] (in³/rev)	Max. working pressure P1 [bar] (PSI)	P2 [bar] (PSI)	P3 [bar] (PSI)	Max. speed [g/min] (rpm)	Max. flow [lt/min] (Gal/min)	Min. speed [g/min] (rpm)	Min. flow [lt/min] (Gal/min)	Dimensions A [mm] (inch)	B [mm] (inch)	Mass [Kg] (lbs)	Min. volumetric efficiency %
2SP G4	**4** (0.24)	280 (4060)	300 (4350)	320 (4640)	4000	16 (4.23)	500	1.9 (0.50)	44.4 (1.748)	93 (3.661)	3.40 (7.50)	95*
2SP G6	**6** (0.37)	280 (4060)	300 (4350)	320 (4640)	4000	24 (6.34)	500	2.85 (0.75)	46 (1.811)	96.3 (3.791)	3.55 (7.83)	
2SP G8	**8.5** (0.52)	280 (4060)	300 (4350)	320 (4640)	3500	29.7 (7.85)	500	4.03 (1.06)	48.1 (1.894)	100.5 (3.957)	3.70 (8.16)	
2SP G11	**11** (0.67)	280 (4060)	300 (4350)	320 (4640)	3500	38.5 (10.17)	500	5.22 (1.38)	50.2 (1.976)	104.6 (4.118)	3.80 (8.38)	
2SP G14	**14** (0.85)	270 (3915)	280 (4060)	290 (4205)	3500	49 (12.95)	500	6.65 (1.76)	52.7 (2.075)	109.6 (4.315)	3.90 (8.60)	
2SP G16	**16.5** (1.01)	230 (3335)	240 (3480)	250 (3625)	3500	57.7 (15.24)	500	7.83 (2.07)	54.8 (2.157)	113.8 (4.480)	4.05 (8.93)	
2SP G19	**19.5** (1.19)	210 (3045)	220 (3190)	230 (3335)	3300	64.3 (16.99)	500	9.26 (2.45)	57.3 (2.256)	118.8 (4.677)	4.20 (9.26)	
2SP G22	**22.5** (1.37)	190 (2755)	200 (2900)	210 (3045)	2800	63 (16.64)	500	10.68 (2.82)	59.8 (2.354)	123.8 (4.874)	4.35 (9.59)	
2SP G26	**26** (1.59)	170 (2465)	180 (2610)	190 (2755)	2500	65 (17.17)	500	12.35 (3.26)	62.7 (2.469)	129.6 (5.102)	4.50 (9.92)	

** Value collected during the testing at 1500 rpm)*

Example of ordering code

2SP	G	14	D		(H)	-	10	G	(VT)

2SP	*Pump type*	*see table*
G	*Flange and cover*	**G** = *Cast iron*
14	*Displacement*	*see table*
D	*Clockwise rotation*	**D =** *Clockwise rotation* **S =** *Anticlockwise rotation*
— [1]	*Flange type*	
(H)	*Stiffening seal for low suction pressure*	*(optional)*
—		
10	*Shaft type*	**10 - 11 - 12 - 13 - 14 - 15 - 16**
G	*Connections type*	**G - N - T - M - U - W - F**
(VT)	*Optional*	**(VT)** *Viton seals (optional)* **VLP-I (N) - VLP-E (N)** *Pressure relief valve (page A-49)*

[1] *It is not necessary to indicate STANDARD flange*

Conn *Port Connections*

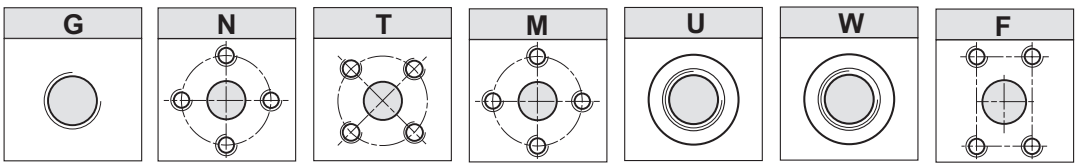

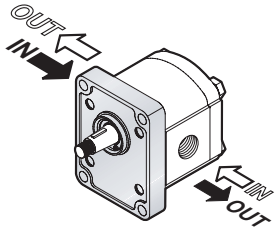

*The sign on the body identifies the **suction side** for the pumps.*

Rotation	
D	S

SEE PAGE 285 FOR PRICES

Flange and cover in Cast iron

Dimensions

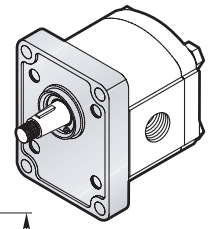

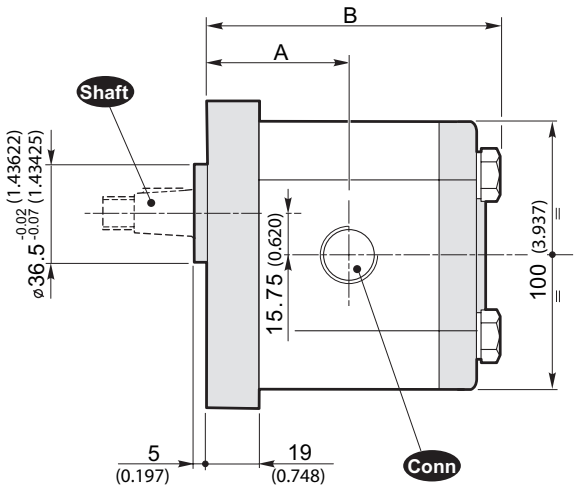

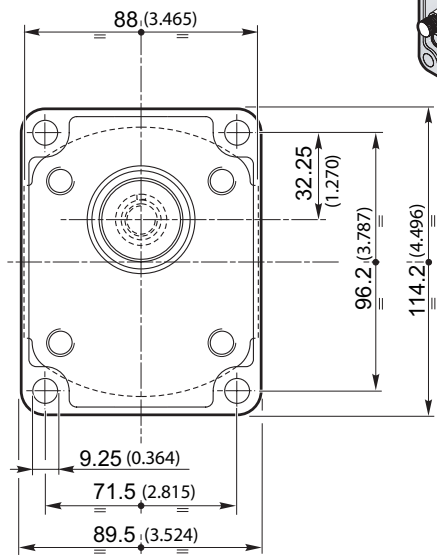

Shaft *Available shafts*

Type **10**

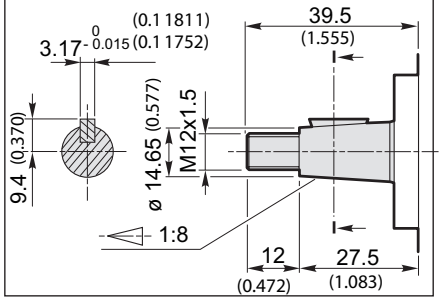

Torque **98 Nm** / ***72.3 ft·lbs***

Type **11**

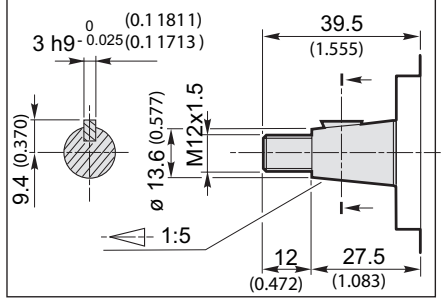

Torque **98 Nm** / ***72.3 ft·lbs***

Type **12**

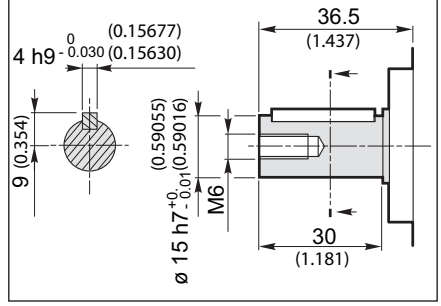

Torque **98 Nm** / ***72.3 ft·lbs***

Type **13**

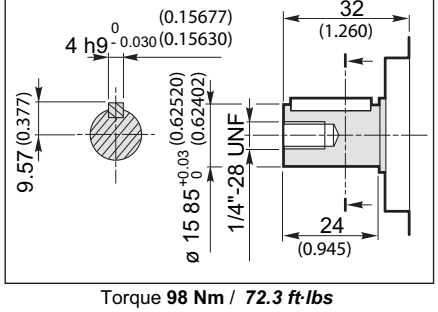

Torque **98 Nm** / ***72.3 ft·lbs***

Type **14**

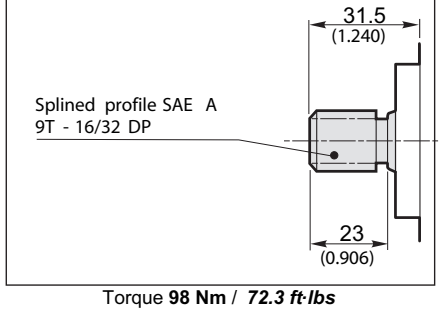

Torque **98 Nm** / ***72.3 ft·lbs***

Type **15**

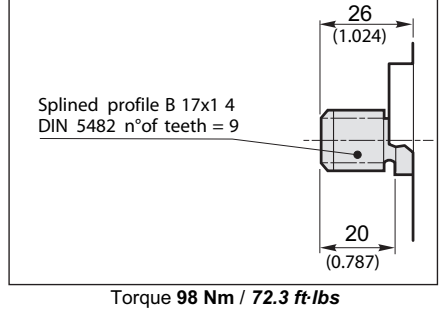

Torque **98 Nm** / ***72.3 ft·lbs***

Tipo / Type **16**

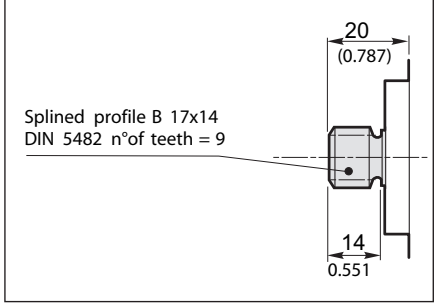

Torque **98 Nm** / ***72.3 ft·lbs***

SEE PAGE 269 FOR PORT SIZES AVAILABLE

SEE PAGE 285 FOR PRICES

50% OFF ALL PRICES

Flange and cover in Aluminium

Technical data

Size	Displacement	Max. working pressure			Max. speed	Max. flow	Min. speed	Min. flow	Dimensions		Mass	Min. volumetric efficiency
		P1	P2	P3					A	B		
	[cm³/rev] (in³/rev)	[bar] (PSI)	[bar] (PSI)	[bar] (PSI)	[g/min] (rpm)	[lt/min] (Gal/min)	[g/min] (rpm)	[lt/min] (Gal/min)	[mm] (inch)	[mm] (inch)	[Kg] (lbs)	%
2SP A4	**4** (0.24)	250 (3625)	270 (3915)	290 (4205)	4000	16 (4.23)	500	1.9 (0.50)	44.4 (1.748)	93 (3.661)	2.30 (5.07)	
2SP A6	**6** (0.37)	250 (3625)	270 (3915)	290 (4205)	4000	24 (6.34)	500	2.85 (0.75)	46 (1.811)	96.3 (3.791)	2.45 (5.40)	
2SP A8	**8.5** (0.52)	250 (3625)	270 (3915)	290 (4205)	3500	29.7 (7.85)	500	4.03 (1.06)	48.1 (1.894)	100.5 (3.957)	2.60 (5.73)	
2SP A11	**11** (0.67)	250 (3625)	270 (3915)	290 (4205)	3500	38.5 (10.17)	500	5.22 (1.38)	50.2 (1.976)	104.6 (4.118)	2.70 (5.95)	
2SP A14	**14** (0.85)	250 (3625)	270 (3915)	290 (4205)	3500	49 (12.95)	500	6.65 (1.76)	52.7 (2.075)	109.6 (4.315)	2.80 (6.17)	95*
2SP A16	**16.5** (1.01)	230 (3335)	240 (3480)	250 (3625)	3500	57.7 (15.24)	500	7.83 (2.07)	54.8 (2.157)	113.8 (4.480)	2.95 (6.51)	
2SP A19	**19.5** (1.19)	210 (3045)	220 (3190)	230 (3335)	3300	64.3 (16.99)	500	9.26 (2.45)	57.3 (2.256)	118.8 (4.677)	3.10 (6.84)	
2SP A22	**22.5** (1.37)	190 (2755)	200 (2900)	210 (3045)	2800	63 (16.64)	500	10.68 (2.82)	59.8 (2.354)	123.8 (4.874)	3.25 (7.17)	
2SP A26	**26** (1.59)	170 (2465)	180 (2610)	190 (2755)	2500	65 (17.17)	500	12.35 (3.26)	62.7 (2.469)	129.6 (5.102)	3.40 (7.50)	

** Value collected during the testing at 1500 rpm)*

Example of ordering code

2SP	A	14	D	SAE A	(H)	-	10	G	(VT)

2SP	*Pump type*	*see table*
A	*Flange and cover*	**A** = *Aluminium*
14	*Displacement*	*see table*
D	*Clockwise rotation*	**D** = *Clockwise rotation* **S** = *Anticlockwise rotation*
SAE A	*Flange type*	**SAE A - SAE A-OR**
(H)	*Stiffening seal for low suction pressure*	*(optional)*
—		
10	*Shaft type*	**10 - 11 - 12 - 13 - 14 - 15 - 16**
G	*Connections type*	**G - N - T - M - U - W - F**
(VT)	*Optional*	**(VT)** *Viton seals (optional)* **VLP-I (N) - VLP-E (N)** *Pressure relief valve (page A-49)*

Conn *Port Connections*

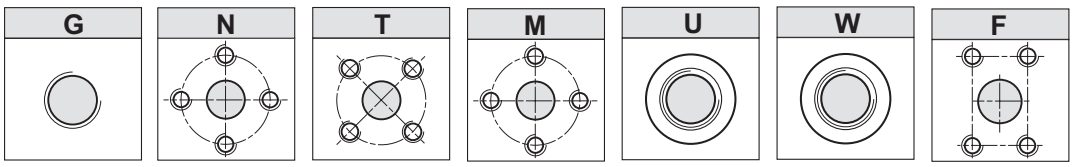

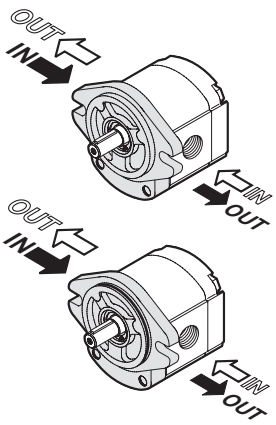

*The sign on the body identifies the **suction side** for the pumps.*

Rotation	
D	S

SEE PAGE 285 FOR PRICES

Flange and cover in Aluminium

Dimensions

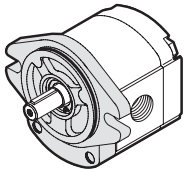

SAE A-OR

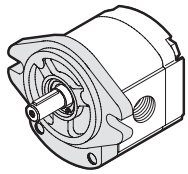

SAE A

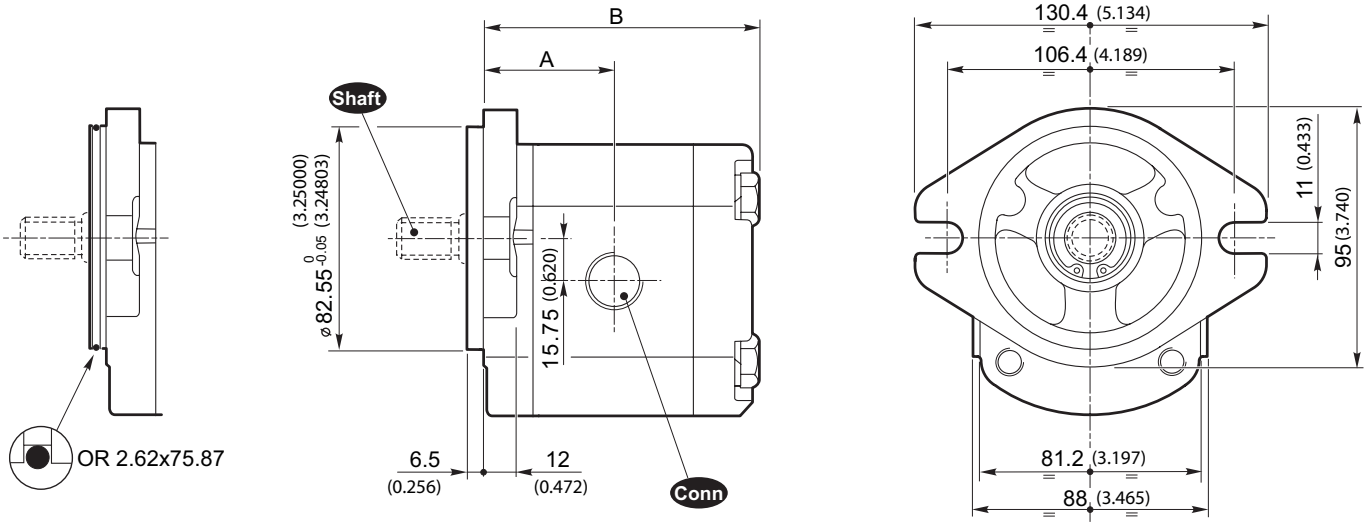

Shaft *Available shafts*

Type **10**

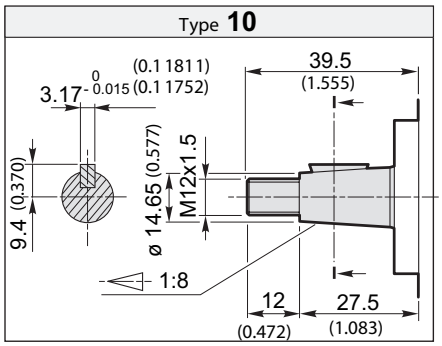

Torque **98 Nm** / ***72.3 ft·lbs***

Type **11**

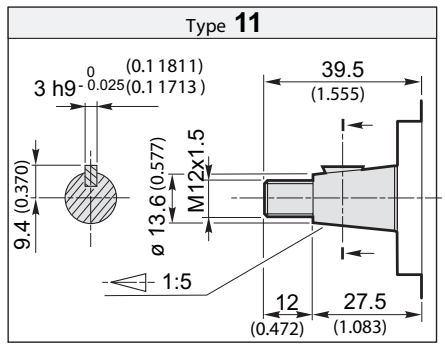

Torque **98 Nm** / ***72.3 ft·lbs***

Type **12**

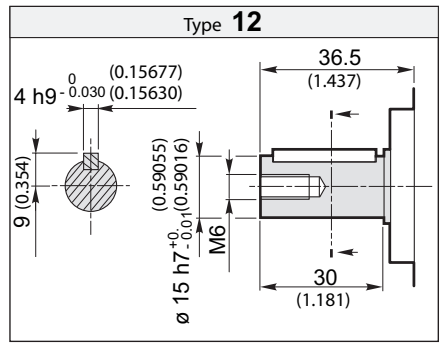

Torque **98 Nm** / ***72.3 ft·lbs***

Type **13**

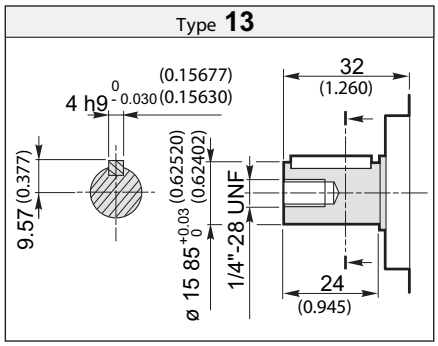

Torque **98 Nm** / ***72.3 ft·lbs***

Type **14**

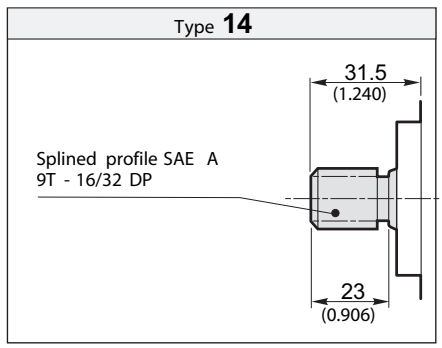

Torque **98 Nm** / ***72.3 ft·lbs***

Type **15**

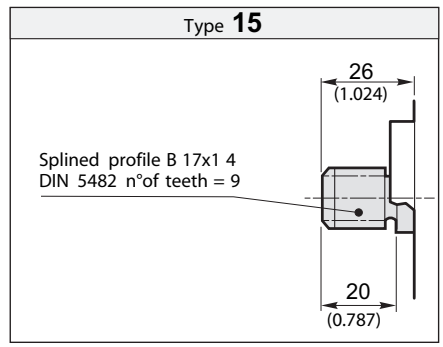

Torque **98 Nm** / ***72.3 ft·lbs***

Type **16**

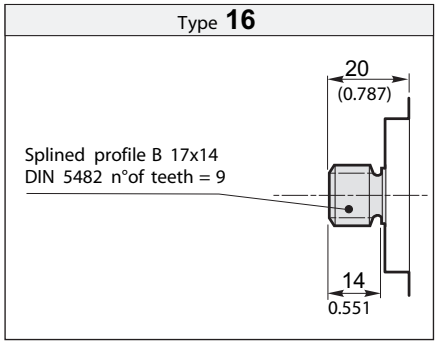

Torque **98 Nm** / ***72.3 ft·lbs***

SEE PAGE 269 FOR PORT SIZES AVAILABLE

SEE PAGE 285 FOR PRICES

PUMPS GROUP 2 • SAE A, SAE A-OR

Flange and cover in Cast iron

Technical data

Size	Displacement	Max. working pressure			Max. speed	Max. flow ·	Min. speed	Min. flow	Dimensions		Mass	Min. volumetric efficiency
		P1	P2	P3					A	B		
	[cm³/rev] (in³/rev)	[bar] (PSI)	[bar] (PSI)	[bar] (PSI)	[g/min] (rpm)	[lt/min] (Gal/min)	[g/min] (rpm)	[lt/min] (Gal/min)	[mm] (inch)	[mm] (inch)	[Kg] (lbs)	%
2SP G4	**4** (0.24)	280 (4060)	300 (4350)	320 (4640)	4000	16 (4.23)	500	1.9 (0.50)	44.4 (1.748)	93 (3.661)	3.40 (7.50)	
2SP G6	**6** (0.37)	280 (4060)	300 (4350)	320 (4640)	4000	24 (6.34)	500	2.85 (0.75)	46 (1.811)	96.3 (3.791)	3.55 (7.83)	
2SP G8	**8.5** (0.52)	280 (4060)	300 (4350)	320 (4640)	3500	29.7 (7.85)	500	4.03 (1.06)	48.1 (1.894)	100.5 (3.957)	3.70 (8.16)	
2SP G11	**11** (0.67)	280 (4060)	300 (4350)	320 (4640)	3500	38.5 (10.17)	500	5.22 (1.38)	50.2 (1.976)	104.6 (4.118)	3.80 (8.38)	
2SP G14	**14** (0.85)	270 (3915)	280 (4060)	290 (4205)	3500	49 (12.95)	500	6.65 (1.76)	52.7 (2.075)	109.6 (4.315)	3.90 (8.60)	95*
2SP G16	**16.5** (1.01)	230 (3335)	240 (3480)	250 (3625)	3500	57.7 (15.24)	500	7.83 (2.07)	54.8 (2.157)	113.8 (4.480)	4.05 (8.93)	
2SP G19	**19.5** (1.19)	210 (3045)	220 (3190)	230 (3335)	3300	64.3 (16.99)	500	9.26 (2.45)	57.3 (2.256)	118.8 (4.677)	4.20 (9.26)	
2SP G22	**22.5** (1.37)	190 (2755)	200 (2900)	210 (3045)	2800	63 (16.64)	500	10.68 (2.82)	59.8 (2.354)	123.8 (4.874)	4.35 (9.59)	
2SP G26	**26** (1.59)	170 (2465)	180 (2610)	190 (2755)	2500	65 (17.17)	500	12.35 (3.26)	62.7 (2.469)	129.6 (5.102)	4.50 (9.92)	

** Value collected during the testing at 1500 rpm)*

Example of ordering code

2SP	G	14	D	SAE A	(H)	-	14	G	(VT)

2SP	*Pump type*	*see table*
G	*Flange and cover*	**G** = *Cast iron*
14	*Displacement (see table)*	*see table*
D	*Clockwise rotation*	**D =** *Clockwise rotation* **S =** *Anticlockwise rotation*
SAE A	*Flange type*	**SAE A - SAE A-OR**
(H)	*Stiffening seal for low suction pressure (optional)*	*(optional)*
—		
14	*Shaft type*	**10 - 11 - 12 - 13 - 14 - 15 - 16**
G	*Connections type*	**G - N - T - M - U - W - F**
(VT)	*Optional*	**(VT)** *Viton seals (optional)* **VLP-I (N) - VLP-E (N)** *Pressure relief valve (page A-49)*

Conn *Port Connections*

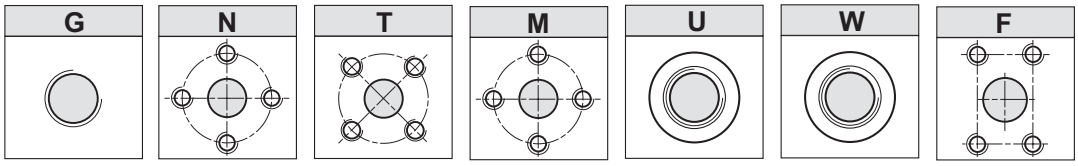

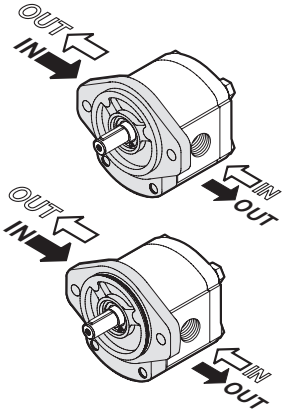

*The sign on the body identifies the **suction side** for the pumps.*

Rotation	
D	S

SEE PAGE 285 FOR PRICES

Flange and cover in Cast iron

Dimensions

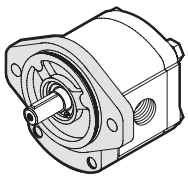

SAE A-OR

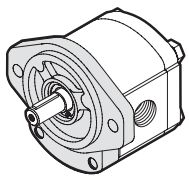

SAE A

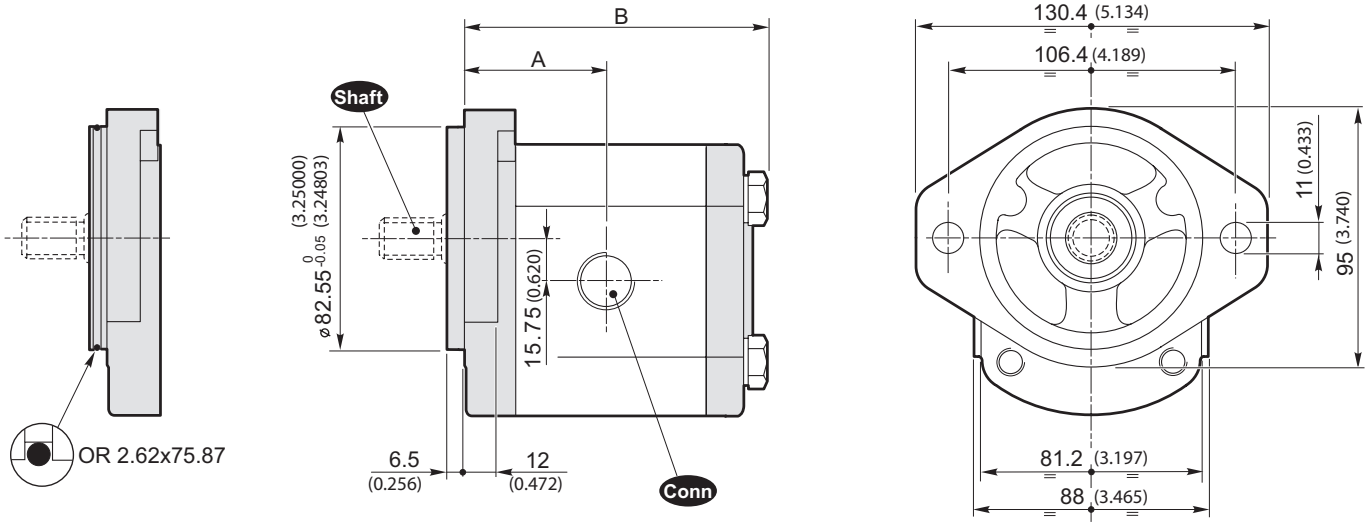

Shaft *Available shafts*

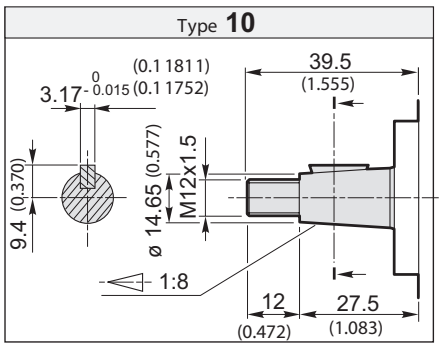

Torque **98 Nm** / ***72.3 ft·lbs***

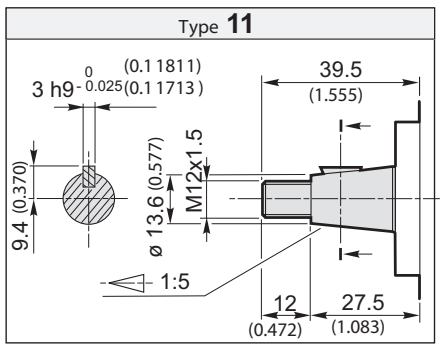

Torque **98 Nm** / ***72.3 ft·lbs***

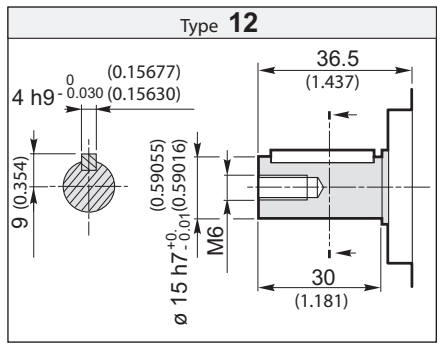

Torque **98 Nm** / ***72.3 ft·lbs***

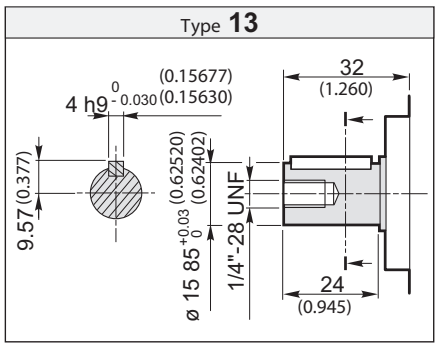

Torque **98 Nm** / ***72.3 ft·lbs***

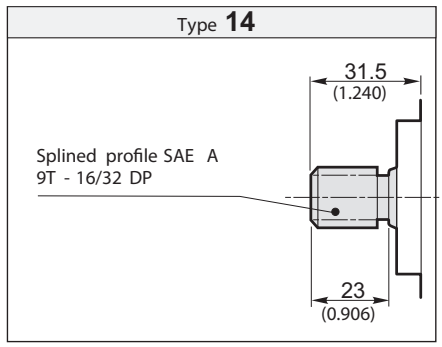

Torque **98 Nm** / ***72.3 ft·lbs***

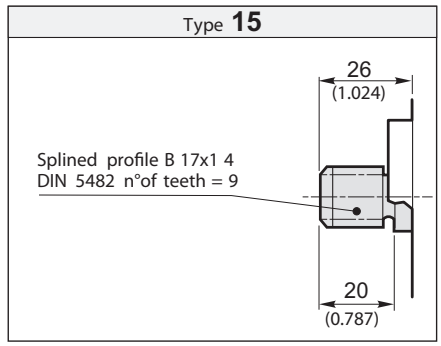

Torque **98 Nm** / ***72.3 ft·lbs***

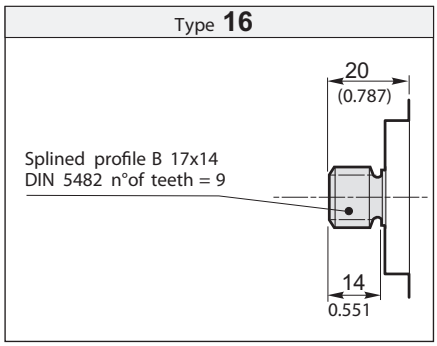

Torque **98 Nm** / ***72.3 ft·lbs***

SEE PAGE 269 FOR PORT SIZES AVAILABLE

SEE PAGE 285 FOR PRICES

50% OFF ALL PRICES

PUMPS GROUP 2 • B80C

Technical data

Size	Displacement	Max. working pressure			Max. speed	Max. flow	Min. speed	Min. flow	Dimensions		Mass	Min. volumetric efficiency
		P1	P2	P3					A	B		
	[cm³/rev] (in³/rev)	[bar] (PSI)	[bar] (PSI)	[bar] (PSI)	[g/min] (rpm)	[lt/min] (Gal/min)	[g/min] (rpm)	[lt/min] (Gal/min)	[mm] (inch)	[mm] (inch)	[Kg] (lbs)	%
2SP A4	**4** (0.24)	250 (3625)	270 (3915)	290 (4205)	4000	16 (4.23)	500	1.9 (0.50)	46.4 1.827	95 3.740	2.30 (5.07)	95*
2SP A6	**6** (0.37)	250 (3625)	270 (3915)	290 (4205)	4000	24 (6.34)	500	2.85 (0.75)	48 1.890	98.3 3.870	2.45 (5.40)	
2SP A8	**8.5** (0.52)	250 (3625)	270 (3915)	290 (4205)	3500	29.7 (7.85)	500	4.03 (1.06)	50.1 1.972	102.5 4.035	2.60 (5.73)	
2SP A11	**11** (0.67)	250 (3625)	270 (3915)	290 (4205)	3500	38.5 (10.17)	500	5.22 (1.38)	52.2 2.055	106.6 4.197	2.70 (5.95)	
2SP A14	**14** (0.85)	250 (3625)	270 (3915)	290 (4205)	3500	49 (12.95)	500	6.65 (1.76)	54.7 2.154	111.6 4.394	2.80 (6.17)	
2SP A16	**16.5** (1.01)	230 (3335)	240 (3480)	250 (3625)	3500	57.7 (15.24)	500	7.83 (2.07)	56.8 2.236	115.8 4.559	2.95 (6.51)	
2SP A19	**19.5** (1.19)	210 (3045)	220 (3190)	230 (3335)	3300	64.3 (16.99)	500	9.26 (2.45)	59.3 2.335	120.8 4.756	3.10 (6.84)	
2SP A22	**22.5** (1.37)	190 (2755)	200 (2900)	210 (3045)	2800	63 (16.64)	500	10.68 (2.82)	61.8 2.433	125.8 4.953	3.25 (7.17)	
2SP A26	**26** (1.59)	170 (2465)	180 (2610)	190 (2755)	2500	65 (17.17)	500	12.35 (3.26)	64.7 2.547	131.6 5.181	3.40 (7.50)	

** Value collected during the testing at 1500 rpm)*

Example of ordering code

2SP	A	14	D		(H)	-	10	G	(VT)

2SP	*Pump type*	*see table*
A	*Flange and cover*	**A** = *Aluminium*
14	*Displacement*	*see table*
D	*Clockwise rotation*	**D =** *Clockwise rotation* **S =** *Anticlockwise rotation*
	Flange type	**B80C**
(H)	*Stiffening seal for low suction pressure*	*(optional)*
—		
10	*Shaft type*	**10 - 11 - 12 - 13 - 14 - 15 - 16**
G	*Connections type*	**G - N - T - M - U - W - F**
(VT)	*Optional*	**(VT)** *Viton seals (optional)* **VLP-I (N) - VLP-E (N)** *Pressure relief valve (page A-49)*

Conn *Port Connections*

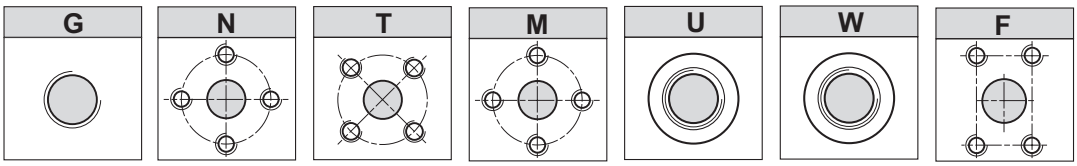

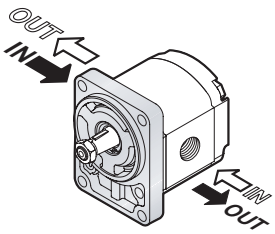

*The sign on the body identifyies the **suction side** for the pumps.*

Rotation	
D	S

SEE PAGE 285 FOR PRICES

Dimensions

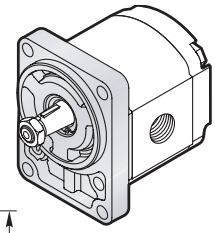

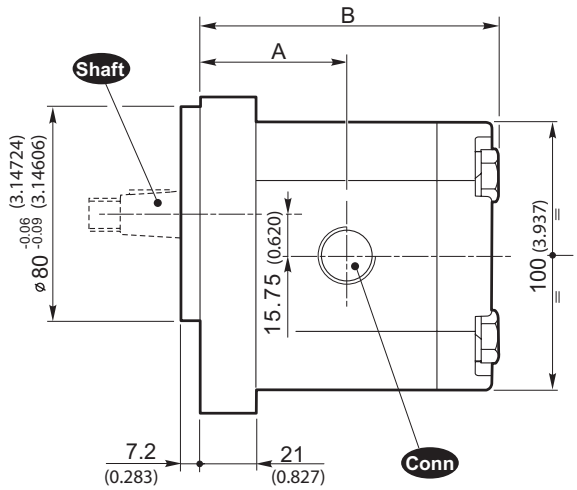

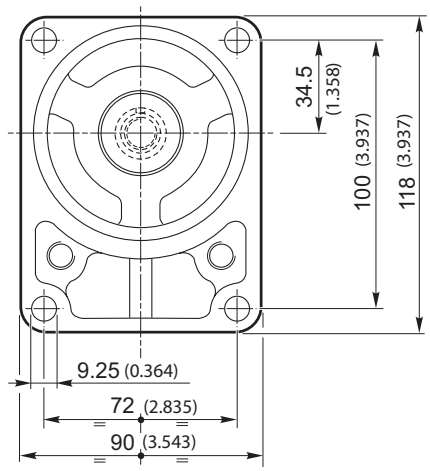

Shaft *Available shafts*

Type **10**

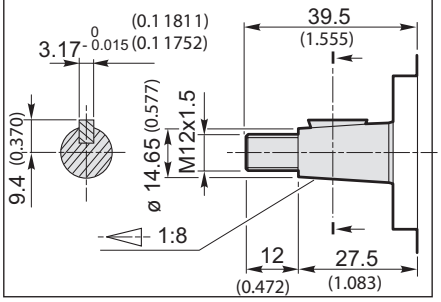

Torque **98 Nm** / ***72.3 ft·lbs***

Type **11**

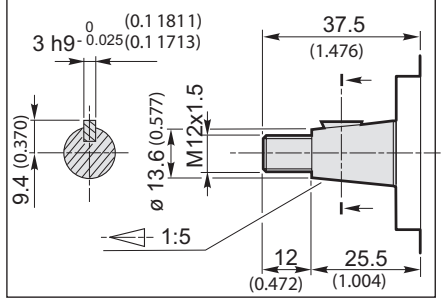

Torque **98 Nm** / ***72.3 ft·lbs***

Type **12**

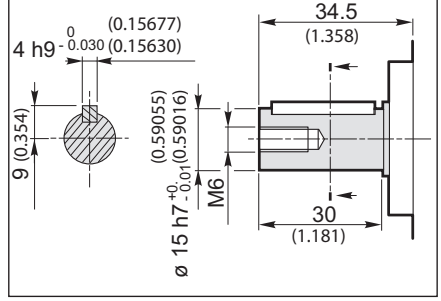

Torque **98 Nm** / ***72.3 ft·lbs***

Type **13**

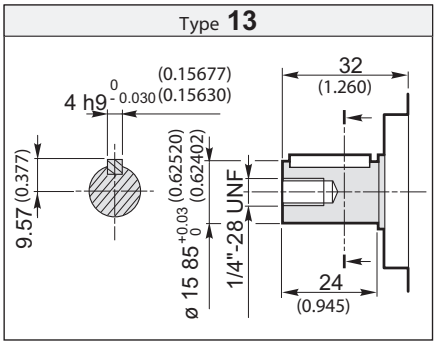

Torque **98 Nm** / ***72.3 ft·lbs***

Type **14**

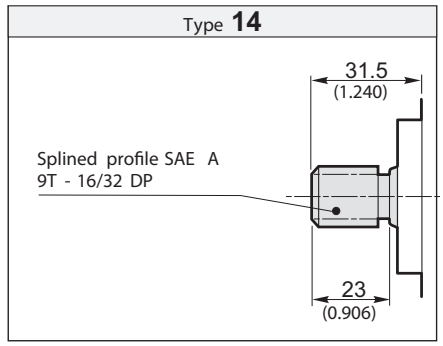

Torque **98 Nm** / ***72.3 ft·lbs***

Type **15**

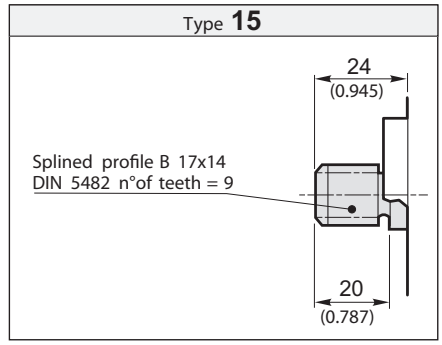

Torque **98 Nm** / ***72.3 ft·lbs***

Type **16**

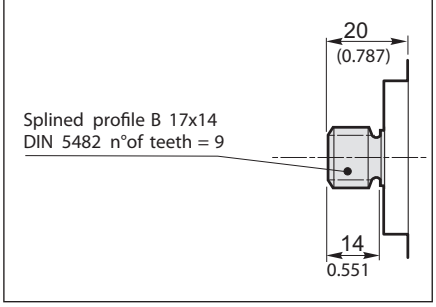

Torque **98 Nm** / ***72.3 ft·lbs***

SEE PAGE 269 FOR PORT SIZES AVAILABLE

SEE PAGE 285 FOR PRICES

Technical data

Size	Displacement	Max. working pressure			Max. speed	Max. flow .	Min. speed	Min. flow	Dimensions				Mass	Min. volumetric efficiency
		P1	P2	P3					A	B	C	L (1)		
	[cm³/rev] (in³/rev)	[bar] (PSI)	[bar] (PSI)	[bar] (PSI)	[g/min] (rpm)	[lt/min] (Gal/min)	[g/min] (rpm)	[lt/min] (Gal/min)	[mm] (inch)	[mm] (inch)	[mm] (inch)	[mm] (inch)	[Kg] (lbs)	%
2SP A4	**4** (0.24)	250 (3625)	270 (3915)	290 (4205)	4000	16 (4.23)	500	1.9 (0.50)	44.4 (1.748)	93 (3.661)	84 (3.307)	105 (4.134)	2.30 (5.07)	95*
2SP A6	**6** (0.37)	250 (3625)	270 (3915)	290 (4205)	4000	24 (6.34)	500	2.85 (0.75)	46 (1.811)	96.3 (3.791)	87.3 (3.437)	105 (4.134)	2.45 (5.40)	
2SP A8	**8.5** (0.52)	250 (3625)	270 (3915)	290 (4205)	3500	29.7 (7.85)	500	4.03 (1.06)	48.1 (1.894)	100.5 (3.957)	91.5 (3.602)	110 (4.331)	2.60 (5.73)	
2SP A11	**11** (0.67)	250 (3625)	270 (3915)	290 (4205)	3500	38.5 (10.17)	500	5.22 (1.38)	50.2 (1.976)	104.6 (4.118)	95.6 (3.764)	115 (4.528)	2.70 (5.95)	
2SP A14	**14** (0.85)	250 (3625)	270 (3915)	290 (4205)	3500	49 (12.95)	500	6.65 (1.76)	52.7 (2.075)	109.6 (4.315)	100.6 (3.961)	120 (4.724)	2.80 (6.17)	
2SP A16	**16.5** (1.01)	230 (3335)	240 (3480)	250 (3625)	3500	57.7 (15.24)	500	7.83 (2.07)	54.8 (2.157)	113.8 (4.480)	104.8 (4.126)	125 (4.921)	2.95 (6.51)	
2SP A19	**19.5** (1.19)	210 (3045)	220 (3190)	230 (3335)	3300	64.3 (16.99)	500	9.26 (2.45)	57.3 (2.256)	118.8 (4.677)	109.8 (4.323)	130 (5.118)	3.10 (6.84)	
2SP A22	**22.5** (1.37)	190 (2755)	200 (2900)	210 (3045)	2800	63 (16.64)	500	10.68 (2.82)	59.8 (2.354)	123.8 (4.874)	114.8 (4.520)	135 (5.315)	3.25 (7.17)	
2SP A26	**26** (1.59)	170 (2465)	180 (2610)	190 (2755)	2500	65 (17.17)	500	12.35 (3.26)	62.7 (2.469)	129.6 (5.102)	120.6 (4.748)	140 (5.512)	3.40 (7.50)	

** Value collected during the testing at 1500 rpm)*

Example of ordering code

2SP	A	14	D		(H)	-	10	G	(VT)

2SP	*Pump type*	*see table*
A	*Flange and cover*	**A** = *Aluminium*
14	*Displacement*	*see table*
D	*Clockwise rotation*	**D =** *Clockwise rotation* **S =** *Anticlockwise rotation*
	Flange type	**B50CX - B50CY**
(H)	*Stiffening seal for low suction pressure*	*(optional)*
—		
10	*Shaft type*	**10 - 11 - 12 - 13 - 14 - 15 - 16**
G	*Connections type*	**G - N - T - M - U - W - F**
(VT)	*Optional*	**(VT)** *Viton seals (optional)* **VLP-I (N) - VLP-E (N)** *Pressure relief valve (page A-49)*

Conn *Port Connections*

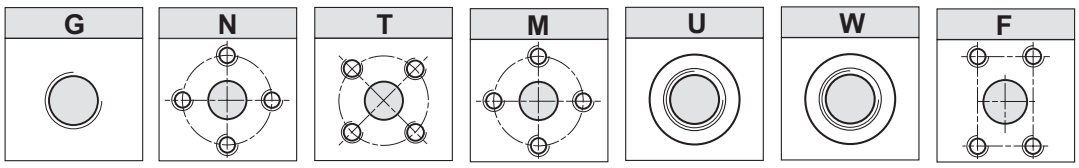

Version
B50CX

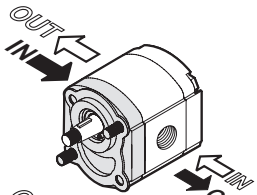

Version
B50CY

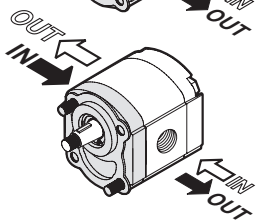

*The sign on the body identifies the **suction side** for the pumps.*

Rotation	
D	S

SEE PAGE 285 FOR PRICES

Dimensions

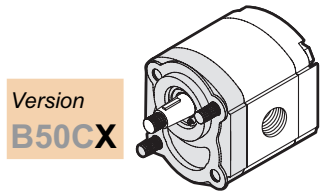

Version
B50CX

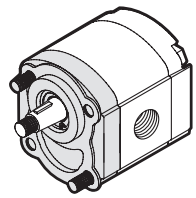

Version
B50CY

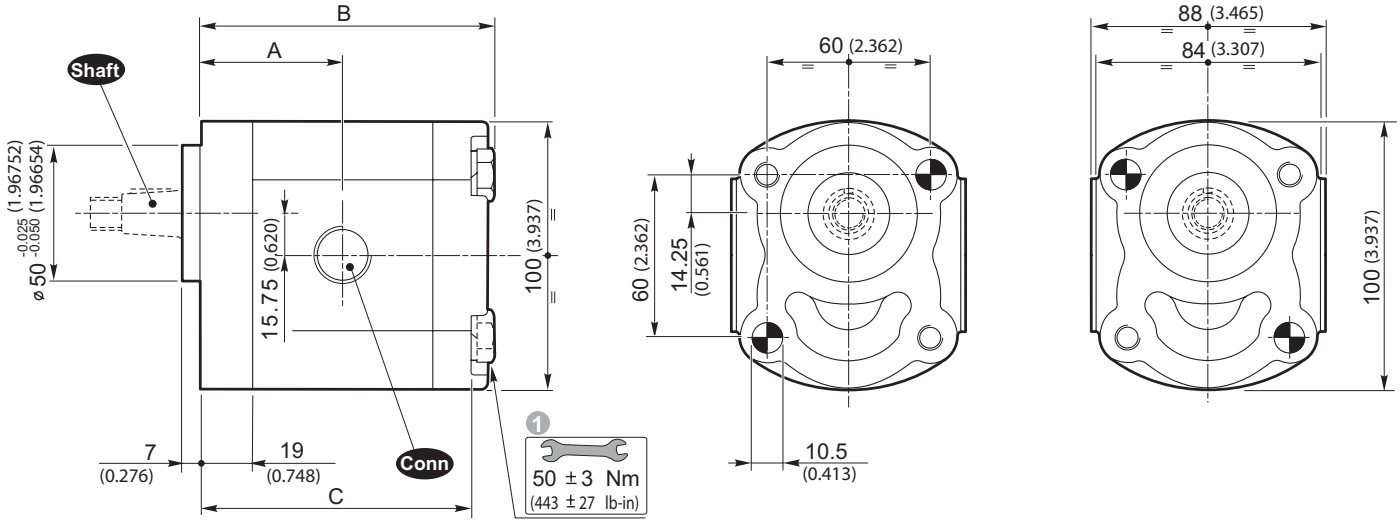

Shaft *Available shafts*

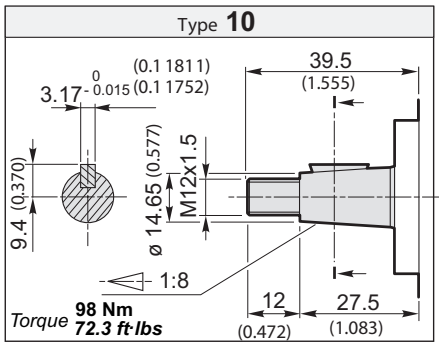

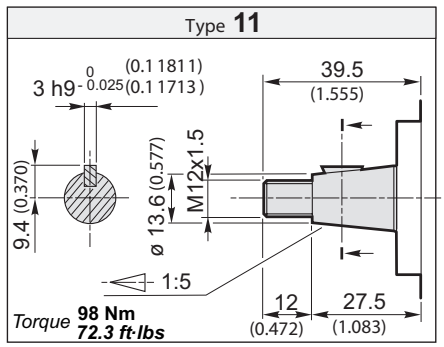

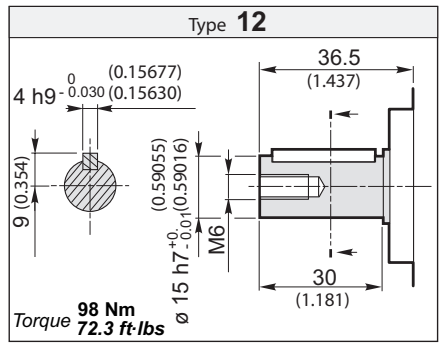

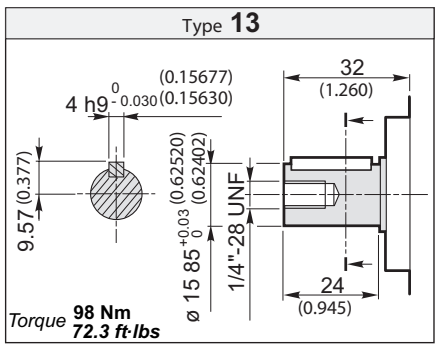

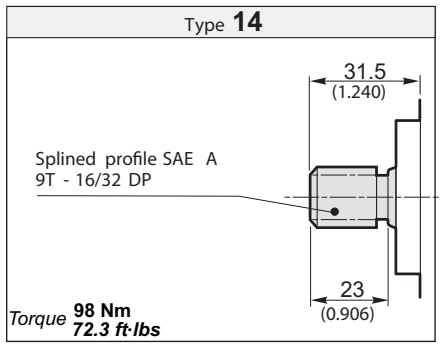

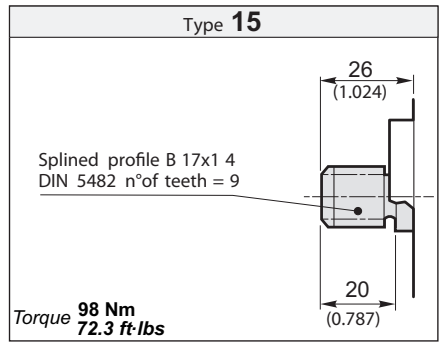

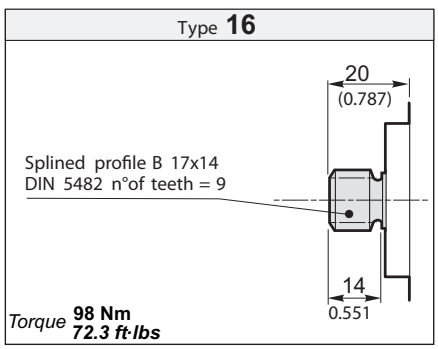

1 *Tightening torque of screws: 443 ± 27 lb·in. Use screws type 10.9 - 12.9 UNI EN 20898/1.*

The assembling of the pump should be effected with 2 screw studs type 10.9 - 12.9 pre-tighten at 354 ± 27 lb·in.
Fix the pump by self-locking nuts with tightening torque 443 ± 27 lb·in.

SEE PAGE 269 FOR PORT SIZES AVAILABLE

The screws kit for the pump assembling should be ordered separately. Ordering code of fixing Kit: **0029W** *+ Lenght L (see table)*

SEE PAGE 285 FOR PRICES

Technical data

Size	Displacement	Max. working pressure			Max. speed	Max. flow	Min. speed	Min. flow	Dimensions				Mass	Min. volumetric efficiency
		P1	P2	P3					A	B	C	L (1)		
	[cm³/rev] (in³/rev)	[bar] (PSI)	[bar] (PSI)	[bar] (PSI)	[g/min] (rpm)	[lt/min] (Gal/min)	[g/min] (rpm)	[lt/min] (Gal/min)	[mm] (inch)	[mm] (inch)	[mm] (inch)	[mm] (inch)	[Kg] (lbs)	%
2SP A4	**4** (0.24)	250 (3625)	270 (3915)	290 (4205)	4000	16 (4.23)	500	1.9 (0.50)	41.7 (1.642)	90.3 (3.555)	81.3 (3.201)	100 (3.937)	2.30 (5.07)	95*
2SP A6	**6** (0.37)	250 (3625)	270 (3915)	290 (4205)	4000	24 (6.34)	500	2.85 (0.75)	43.3 (1.705)	93.6 (3.685)	84.6 (3.331)	105 (4.134)	2.45 (5.40)	
2SP A8	**8.5** (0.52)	250 (3625)	270 (3915)	290 (4205)	3500	29.7 (7.85)	500	4.03 (1.06)	45.4 (1.787)	97.8 (3.850)	88.8 (3.496)	110 (4.331)	2.60 (5.73)	
2SP A11	**11** (0.67)	250 (3625)	270 (3915)	290 (4205)	3500	38.5 (10.17)	500	5.22 (1.38)	47.5 (1.870)	101.9 (4.012)	92.9 (3.657)	115 (4.528)	2.70 (5.95)	
2SP A14	**14** (0.85)	250 (3625)	270 (3915)	290 (4205)	3500	49 (12.95)	500	6.65 (1.76)	50 (1.969)	106.9 (4.209)	97.9 (3.854)	120 (4.724)	2.80 (6.17)	
2SP A16	**16.5** (1.01)	230 (3335)	240 (3480)	250 (3625)	3500	57.7 (15.24)	500	7.83 (2.07)	52.1 (2.051)	111.1 (4.374)	102.1 (4.020)	120 (4.724)	2.95 (6.51)	
2SP A19	**19.5** (1.19)	210 (3045)	220 (3190)	230 (3335)	3300	64.3 (16.99)	500	9.26 (2.45)	54.6 (2.150)	116.1 (4.571)	107.1 (4.217)	125 (4.921)	3.10 (6.84)	
2SP A22	**22.5** (1.37)	190 (2755)	200 (2900)	210 (3045)	2800	63 (16.64)	500	10.68 (2.82)	57.1 (2.248)	121.1 (4.768)	112.1 (4.413)	130 (5.118)	3.25 (7.17)	
2SP A26	**26** (1.59)	170 (2465)	180 (2610)	190 (2755)	2500	65 (17.17)	500	12.35 (3.26)	60 (2.362)	126.9 (4.996)	117.9 (4.642)	140 (5.512)	3.40 (7.50)	

** Value collected during the testing at 1500 rpm)*

Example of ordering code

2SP	A	14	D	E53CX	(H)	-	10	G	(VT)

2SP	*Pump type*	*see table*
A	*Flange and cover*	**A** = *Aluminium*
14	*Displacement*	*see table*
D	*Clockwise rotation*	**D =** *Clockwise rotation* **S =** *Anticlockwise rotation*
E52CX	*Flange type*	**E52CX - E52CY**
(H)	*Stiffening seal for low suction pressure*	*(optional)*
—		
10	*Shaft type*	**17**
G	*Connections type*	**G - N - T - M - U - W - F**
(VT)	*Optional*	**(VT)** *Viton seals (optional)* **VLP-I (N) - VLP-E (N)** *Pressure relief valve (page A-49)*

Conn *Port Connections*

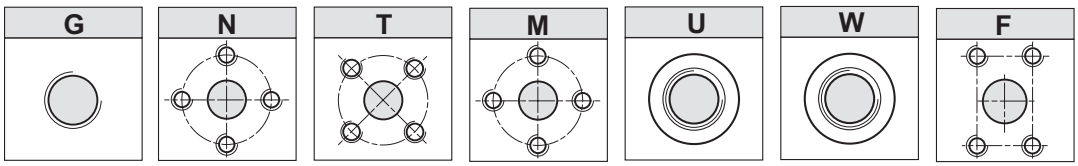

Version
E52CX

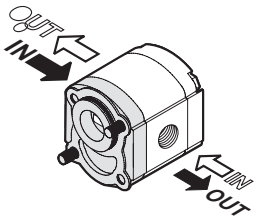

Version
E52CY

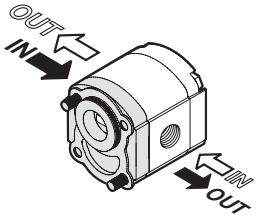

*The sign on the body identifies the **suction side** for the pumps.*

Rotation	
D	S

SEE PAGE 285 FOR PRICES

Dimensions

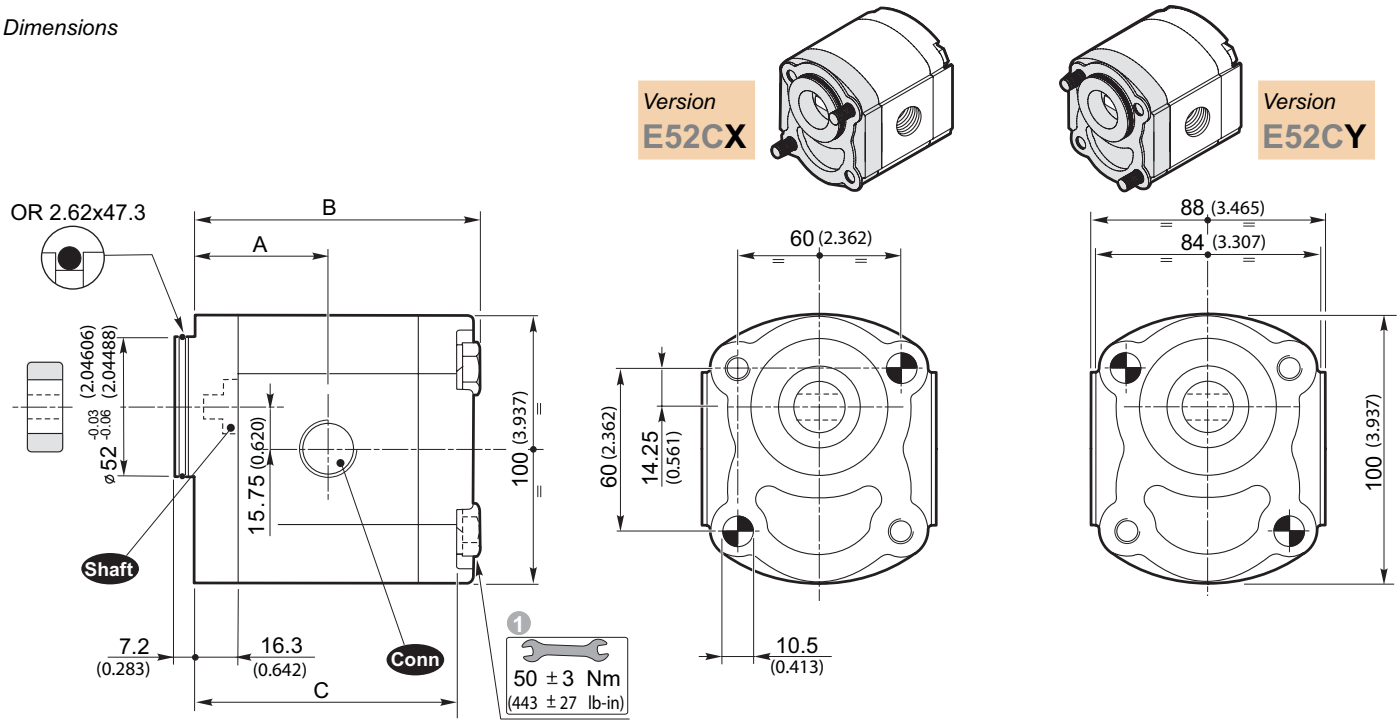

Shaft *Available shafts*

Type **17**

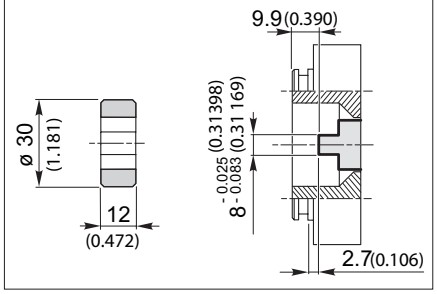

Torque **70 Nm** / ***51.6 ft·lbs***

SEE PAGE 269 FOR PORT SIZES AVAILABLE

1

Tightening torque of screws: 443 ± 27 lb·in. Use screws type 10.9 - 12.9 UNI EN 20898/1.

The assembling of the pump should be effected with 2 screw studs type 10.9 - 12.9 pre-tighten at 354 ± 27 lb·in.
Fix the pump by self-locking nuts with tightening torque 443 ± 27 lb·in.

The screws kit for the pump assembling should be ordered separately.
Ordering code of fixing Kit:

0029W *+ Length L (see table)*

SEE PAGE 285 FOR PRICES

PUMPS GROUP 2 • PRKS 400 D

Technical data

Size	Displacement	Max. working pressure			Max. speed	Max. flow	Min. speed	Min. flow	Dimensions		Mass	Min. volumetric efficiency
		P1	P2	P3					A	B		
	[cm³/rev] (in³/rev)	[bar] (PSI)	[bar] (PSI)	[bar] (PSI)	[g/min] (rpm)	[lt/min] (Gal/min)	[g/min] (rpm)	[lt/min] (Gal/min)	[mm] (inch)	[mm] (inch)	[Kg] (lbs)	%
2SP A4	**4** (0.24)	250 (3625)	270 (3915)	290 (4205)	4000	16 (4.23)	500	1.9 (0.50)	44.4 (1.748)	93 (3.661)	2.30 (5.07)	95*
2SP A6	**6** (0.37)	250 (3625)	270 (3915)	290 (4205)	4000	24 (6.34)	500	2.85 (0.75)	46 (1.811)	96.3 (3.791)	2.45 (5.40)	
2SP A8	**8.5** (0.52)	250 (3625)	270 (3915)	290 (4205)	3500	29.7 (7.85)	500	4.03 (1.06)	48.1 (1.894)	100.5 (3.957)	2.60 (5.73)	
2SP A11	**11** (0.67)	250 (3625)	270 (3915)	290 (4205)	3500	38.5 (10.17)	500	5.22 (1.38)	50.2 (1.976)	104.6 (4.118)	2.70 (5.95)	
2SP A14	**14** (0.85)	250 (3625)	270 (3915)	290 (4205)	3500	49 (12.95)	500	6.65 (1.76)	52.7 (2.075)	109.6 (4.315)	2.80 (6.17)	
2SP A16	**16.5** (1.01)	230 (3335)	240 (3480)	250 (3625)	3500	57.7 (15.24)	500	7.83 (2.07)	54.8 (2.157)	113.8 (4.480)	2.95 (6.51)	
2SP A19	**19.5** (1.19)	210 (3045)	220 (3190)	230 (3335)	3300	64.3 (16.99)	500	9.26 (2.45)	57.3 (2.256)	118.8 (4.677)	3.10 (6.84)	
2SP A22	**22.5** (1.37)	190 (2755)	200 (2900)	210 (3045)	2800	63 (16.64)	500	10.68 (2.82)	59.8 (2.354)	123.8 (4.874)	3.25 (7.17)	
2SP A26	**26** (1.59)	170 (2465)	180 (2610)	190 (2755)	2500	65 (17.17)	500	12.35 (3.26)	62.7 (2.469)	129.6 (5.102)	3.40 (7.50)	

** Value collected during the testing at 1500 rpm)*

Example of ordering code

2SP	A	14	D	PRKS 400 D	-	G

2SP	*Pump type*	*see table*
A	*Flange and cover*	**A** = *Aluminium*
14	*Displacement*	*see table*
D	*Clockwise rotation*	**D =** *Clockwise rotation (usually supplied)* **S =** *Anticlockwise rotation*
PRKS0400 D	*Perkins flange*	**PRKS 400 D**
—		
G	*Connections type*	**G - N - T - M - U - W - F**

Conn *Port Connections*

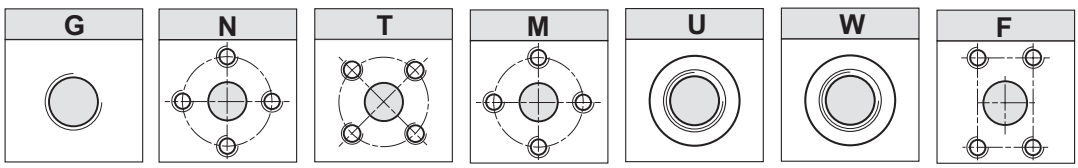

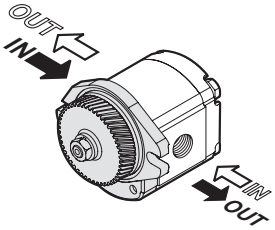

*The sign on the body identifies the **suction side** for the pumps.*

Rotation	
D	S
➡	⇨

SEE PAGE 285 FOR PRICES

Dimensions

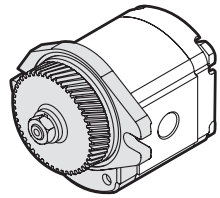

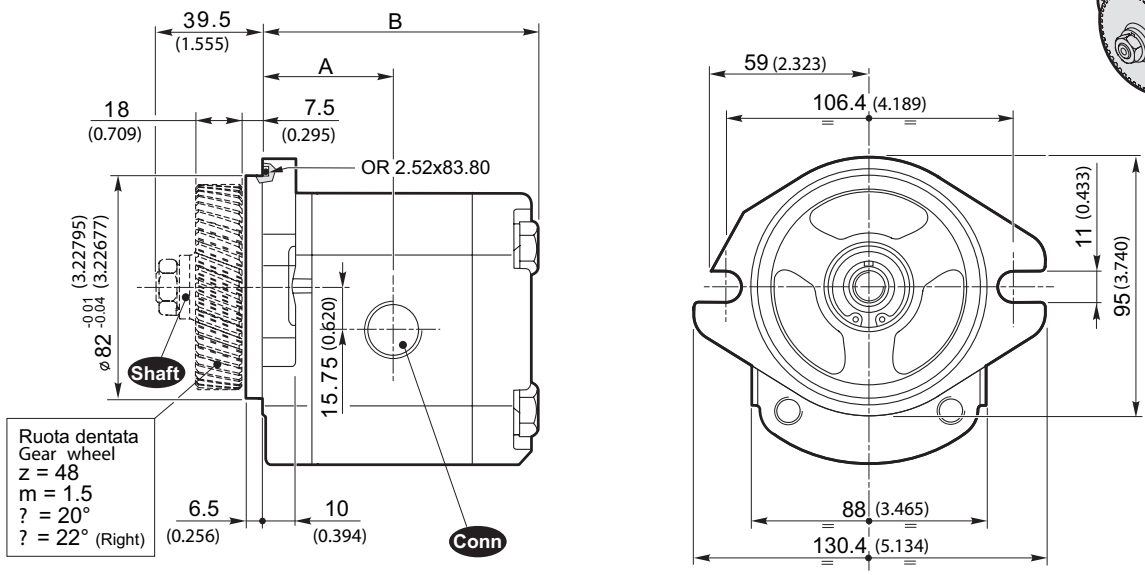

Shaft *Available shafts*

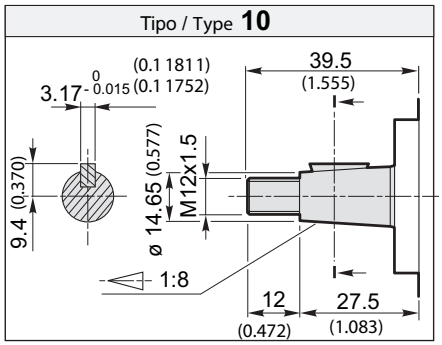

Torque **98 Nm** / ***72.3 ft·lbs***

SEE PAGE 269 FOR PORT SIZES AVAILABLE

SEE PAGE 285 FOR PRICES

PUMPS GROUP 2 • SAE A 14* (z=10), SAE A 14** (z=11),

Technical data

SAE A 14* z = 10

Size	Displacement	Max. working pressure			Max. speed	Max. flow	Min. speed	Min. flow	Dimensions		Mass	Min. volumetric efficiency
		P1	P2	P3					A	B		
	[cm³/rev] (in³/rev)	[bar] (PSI)	[bar] (PSI)	[bar] (PSI)	[g/min] (rpm)	[lt/min] (Gal/min)	[g/min] (rpm)	[lt/min] (Gal/min)	[mm] (inch)	[mm] (inch)	[Kg] (lbs)	%
2SP ...8	**8.5** (0.52)	250 (3625)	270 (3915)	290 (4205)	3500	29.7 (7.85)	500	4.03 (1.06)	48.1 (1.894)	100.5 (3.957)	2.65 (5.84)	95*
2SP ...11	**11** (0.67)	250 (3625)	270 (3915)	290 (4205)	3500	38.5 (10.17)	500	5.22 (1.38)	50.2 (1.976)	104.6 (4.118)	2.75 (6.06)	
2SP ...26	**26** (1.59)	170 (2465)	180 (2610)	190 (2755)	2500	65 (17.17)	500	12.35 (3.26)	62.7 (2.469)	129.6 (5.102)	3.45 (7.61)	

SAE A 14** z = 11

Size	Displacement	Max. working pressure			Max. speed	Max. flow	Min. speed	Min. flow	Dimensions		Mass	Min. volumetric efficiency
		P1	P2	P3					A	B		
	[cm³/rev] (in³/rev)	[bar] (PSI)	[bar] (PSI)	[bar] (PSI)	[rpm]	[lt/min] (Gal/min)	[rpm]	[lt/min] (Gal/min)	[mm]	[mm]	[Kg] (lbs)	%
2SP ...6	**6** (0.37)	250 (3625)	270 (3915)	290 (4205)	4000	24 (6.34)	500	2.85 (0.75)	46 (1.811)	96.3 (3.791)	2.45 (5.40)	95*
2SP ...11	**11** (0.67)	250 (3625)	270 (3915)	290 (4205)	3500	38.5 (10.17)	500	5.22 (1.38)	50.2 (1.976)	104.6 (4.118)	2.70 (5.95)	
2SP ...14	**14** (0.85)	250 (3625)	270 (3915)	290 (4205)	3500	49 (12.95)	500	6.65 (1.76)	52.7 (2.075)	109.6 (4.315)	2.80 (6.17)	

** Value collected during the testing at 1500 rpm)*

Example of ordering code

2SP	A	26	D	SAEA	-	14*	G

2SP	*Pump type*	*see table*
A	*Flange and cover*	**A** = *Aluminium* **G** = *Cast-iron flange and cover*
26	*Displacement*	*see table*
D	*Clockwise rotation*	**D** = *Clockwise rotation* **S** = *Anticlockwise rotation*
SAEA	*Flange type*	**SAE A**
—		
14*	*Shaft type*	**14* - 14****
G	*Connections type*	**G - N - T - M - U - W - F**

Conn *Port Connections*

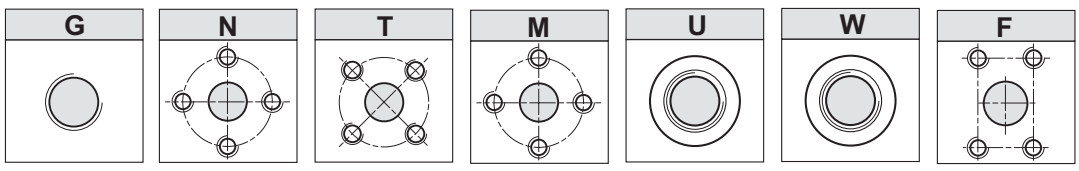

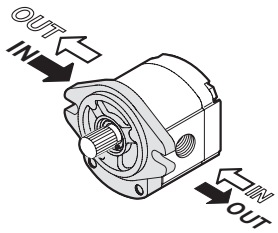

*The sign on the body identifies the **suction side** for the pumps.*

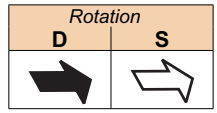

SEE PAGE 285 FOR PRICES

Dimensions

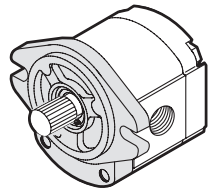

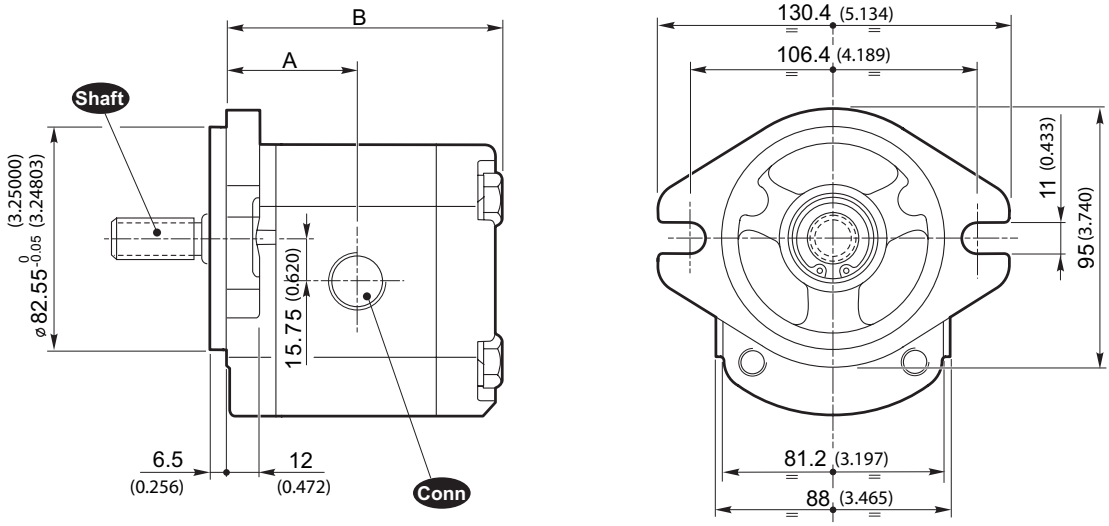

Shaft *Available shafts*

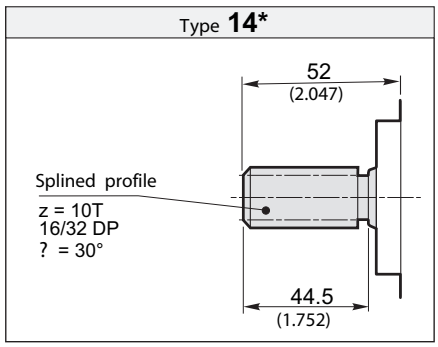

Torque **98 Nm** / ***72.3 ft·lbs***

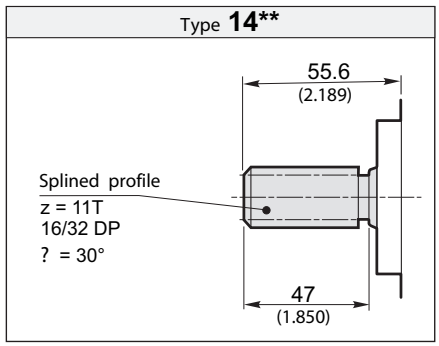

Torque **98 Nm** / ***72.3 ft·lbs***

SEE PAGE 269 FOR PORT SIZES AVAILABLE

SEE PAGE 285 FOR PRICES

Version to use with axial and/or radial loads

Technical data

Size	Displacement [cm³/rev] (in³/rev)	Max. working pressure P1 [bar] (PSI)	P2 [bar] (PSI)	P3 [bar] (PSI)	Max. speed [g/min] (rpm)	Max. flow · [lt/min] (Gal/min)	Min. speed [g/min] (rpm)	Min. flow [lt/min] (Gal/min)	Dimensions A [mm] (inch)	B [mm] (inch)	Mass [Kg] (lbs)	Min. volumetric efficiency %
2SP A4	**4** (0.24)	250 (3625)	270 (3915)	290 (4205)	4000	16 (4.23)	500	1.9 (0.50)	64.4 (2.535)	113 (4.449)	2.8 (6.17)	95*
2SP A6	**6** (0.37)	250 (3625)	270 (3915)	290 (4205)	4000	24 (6.34)	500	2.85 (0.75)	66 (2.598)	116.3 (4.579)	2.95 (6.50)	
2SP A8	**8.5** (0.52)	250 (3625)	270 (3915)	290 (4205)	3500	29.7 (7.85)	500	4.03 (1.06)	68.1 (2.681)	120.5 (4.744)	3.1 (6.84)	
2SP A11	**11** (0.67)	250 (3625)	270 (3915)	290 (4205)	3500	38.5 (10.17)	500	5.22 (1.38)	70.2 (2.764)	124.6 (4.906)	3.2 (7.06)	
2SP A14	**14** (0.85)	250 (3625)	270 (3915)	290 (4205)	3500	49 (12.95)	500	6.65 (1.76)	72.7 (2.862)	129.6 (5.102)	3.3 (7.28)	
2SP A16	**16.5** (1.01)	230 (3335)	240 (3480)	250 (3625)	3500	57.7 (15.24)	500	7.83 (2.07)	74.8 (2.945)	133.8 (5.268)	3.45 (7.61)	
2SP A19	**19.5** (1.19)	210 (3045)	220 (3190)	230 (3335)	3300	64.3 (16.99)	500	9.26 (2.45)	77.3 (3.043)	138.8 (5.465)	3.6 (7.94)	
2SP A22	**22.5** (1.37)	190 (2755)	200 (2900)	210 (3045)	2800	63 (16.64)	500	10.68 (2.82)	79.8 (3.142)	143.8 (5.661)	3.75 (8.27)	
2SP A26	**26** (1.59)	170 (2465)	180 (2610)	190 (2755)	2500	65 (17.17)	500	12.35 (3.26)	82.7 (3.256)	149.6 (5.890)	3.9 (8.60)	

** Value collected during the testing at 1500 rpm)*

Example of ordering code

2SP	A	14	D	SUPP.STND	-	10	G	(VT)

2SP	*Pump type*	*see table*
A	*Flange and cover*	**A** = *Aluminium*
14	*Displacement*	*see table*
D	*Clockwise rotation*	**D** = *Clockwise rotation* **S** = *Anticlockwise rotation*
SUPP.STND	*Support type*	**SUPP.STND**
—		
10	*Shaft type*	**10**
G	*Connections type*	**G - N - T - M - U - W - F**
(VT)	*Optional*	**(VT)** *Viton seals (optional)* **VLP-I (N) - VLP-E (N)** *Pressure relief valve (page A-49)*

It is not necessary to indicate STANDARD flange

Conn *Port Connections*

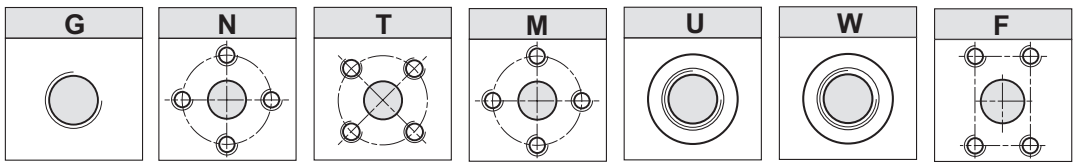

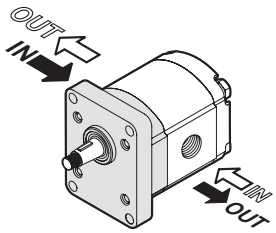

*The sign on the body identifies the **suction side** for the pumps.*

Rotation	
D	S

SEE PAGE 285 FOR PRICES

Version to be chosen with axial and/or radial loads

Dimensions

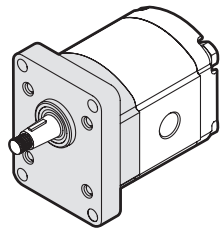

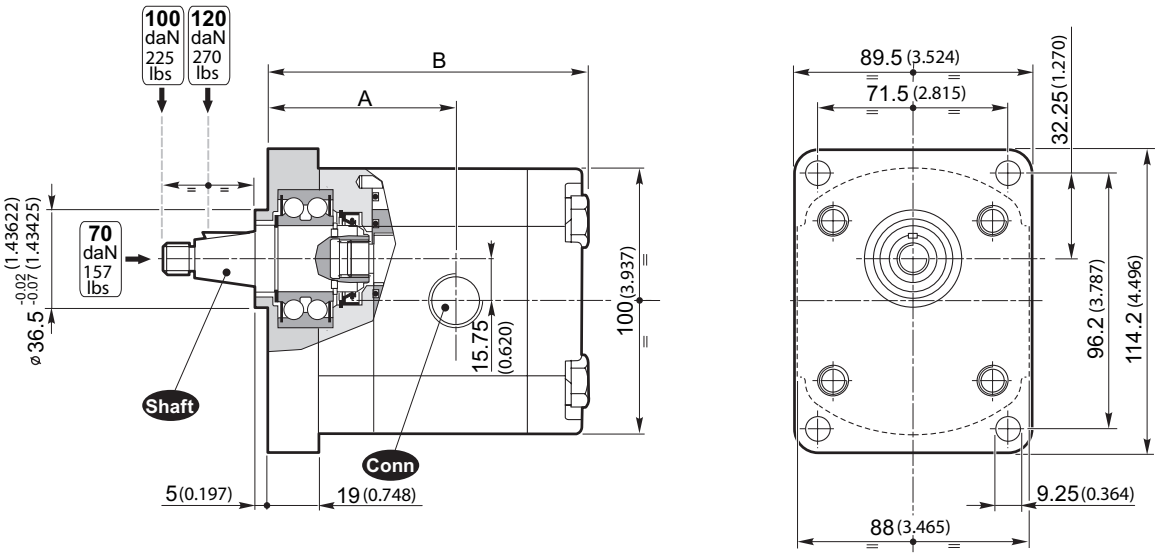

Shaft *Available shafts*

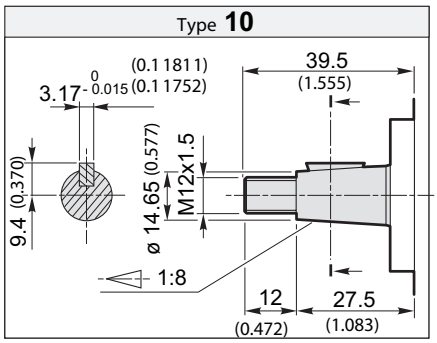

Torque **98 Nm** / ***72.3 ft·lbs***

SEE PAGE 269 FOR PORT SIZES AVAILABLE

SEE PAGE 285 FOR PRICES

G

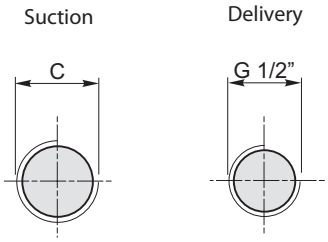

Size 4 ÷ 8
C
G 1/2"

Size 11 ÷ 26
C
G 3/4"

N

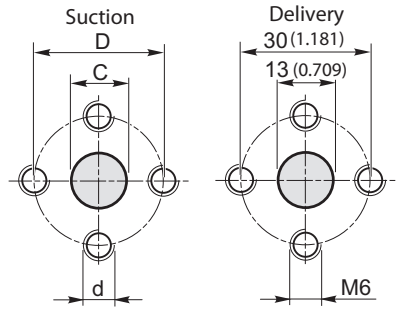

Size 4 ÷ 8		
C	D	d
13 (0.512)	30 (1.181)	M6

Size 11 ÷ 26		
C	D	d
19 (0.748)	40 (1.575)	M8

T

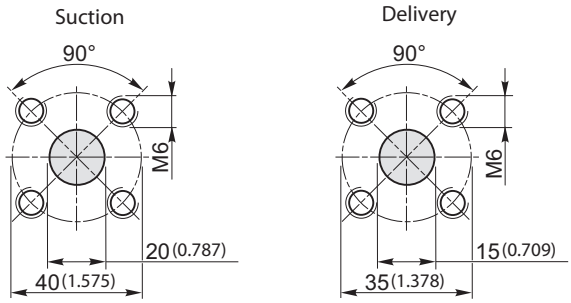

M

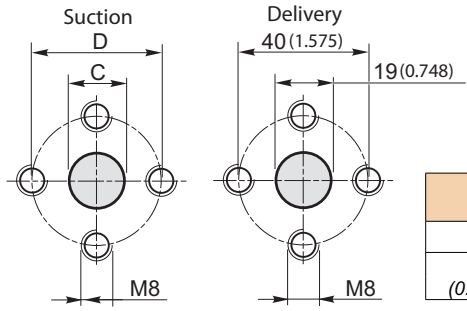

Size 11 ÷ 26	
C	D
19 (0.748)	40 (1.575)

U

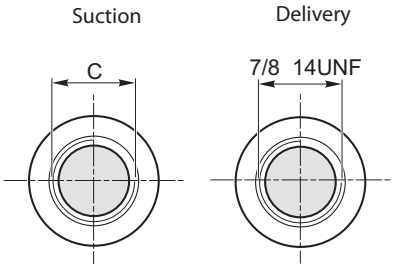

Size 4 ÷ 8
C
7/8 14UNF

Size 11 ÷ 26
C
1" 1/16 12UN

W

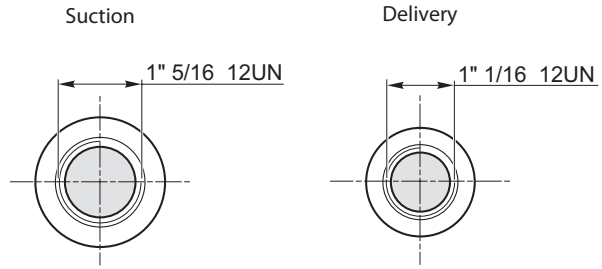

F

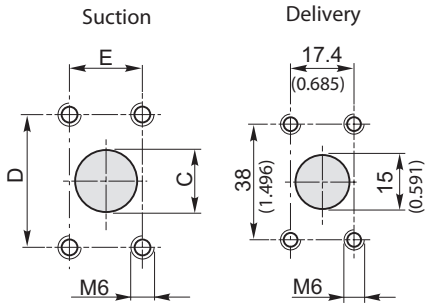

Size 4 ÷ 11		
C	D	E
20 (0.787)	38 (1.496)	17.4 (0.685)

Size 14 ÷ 26		
C	D	E
26 (1.024)	22.4 (0.882)	47.6 (1.874)

*The sign on the body identifies the **suction side** for the pumps.*

Port Connections position

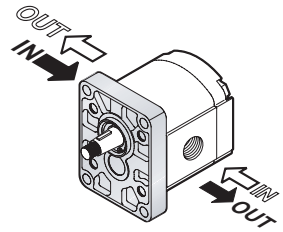

Rotation	
D	S

SEE PAGE 285 FOR PRICES

VLP- I (N)

Pressure relief valve with internal exhaust

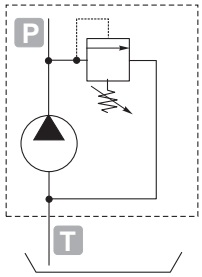

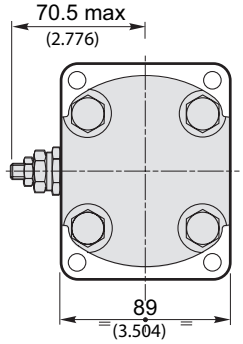

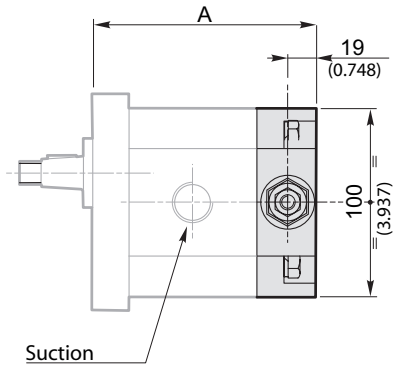

	A		
	Standard SAE A B50C	B80C	E52C
2SP A4	104.8 *(4.126)*	106.8 *(4.205)*	102.1 *(4.020)*
2SP A6	108.1 *(4.256)*	110.1 *(4.335)*	105.4 *(4.150)*
2SP A8	112.3 *(4.421)*	114.3 *(4.500)*	109.6 *(4.315)*
2SP A11	116.4 *(4.583)*	118.4 *(4.661)*	113.7 *(4.476)*
2SP A14	121.4 *(4.780)*	123.4 *(4.858)*	118.7 *(4.673)*
2SP A16	125.6 *(4.945)*	127.6 *(5.024)*	122.9 *(4.839)*
2SP A19	130.6 *(5.142)*	132.6 *(5.220)*	127.9 *(5.035)*
2SP A22	135.6 *(5.339)*	137.6 *(5.417)*	132.9 *(5.232)*
2SP A26	141.4 *(5.567)*	143.4 *(5.646)*	138.7 *(5.461)*

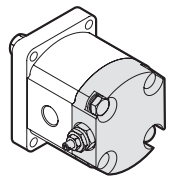

VLP- E (N)

Pressure relief valve with external exhaust

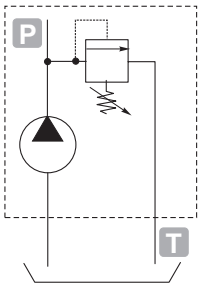

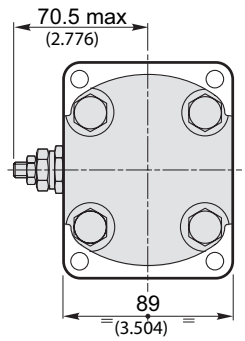

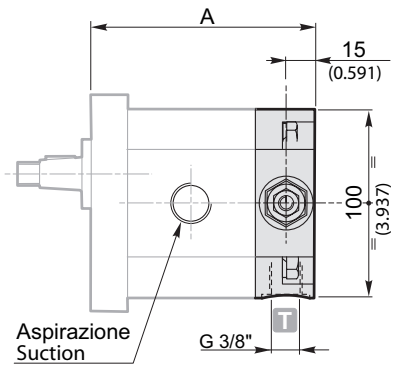

	A		
	Standard SAE A B50C	B80C	E52C
2SP A4	100.8 *(3.969)*	102.8 *(4.047)*	98.1 *(3.862)*
2SP A6	104.1 *(4.098)*	106.1 *(4.177)*	101.4 *(3.992)*
2SP A8	108.3 *(4.264)*	110.3 *(4.343)*	105.6 *(4.157)*
2SP A11	112.4 *(4.425)*	114.4 *(4.504)*	109.7 *(4.319)*
2SP A14	117.4 *(4.622)*	119.4 *(4.701)*	114.7 *(4.516)*
2SP A16	121.6 *(4.787)*	123.6 *(4.866)*	118.9 *(4.681)*
2SP A19	126.6 *(4.984)*	128.6 *(5.063)*	123.9 *(4.878)*
2SP A22	131.6 *(5.181)*	133.6 *(5.260)*	128.9 *(5.075)*
2SP A26	137.4 *(5.409)*	139.4 *(5.488)*	134.7 *(5.303)*

Warning.
The pressure relief valve can be applied by substituting the rear cover.
It is supplied only with aluminium flange and cover.
The showed pumps are anticlockwise rotation.

The opening of the pressure relief valve should be carry out for times not over 10" each minute to avoid the overheating of the pump.

SEE PAGE 269 FOR PORT SIZES AVAILABLE

Example of ordering code

2SP	A	14	D	SAE A	-	10	G	(VT)	VLP-I	(N)

VLP-I	*Cover with VLP*	**VPL-I** *(at internal exhaust)* **VLP-E** *(at external exhaust)*
(N)	*Spring type*	**B - N - R** *(See table)*

		Spring type **B** *white spring*	**N** *black spring*	**R** *red spring*
*Calibration fields**	[bar] *(psi)*	10 ÷ 100 *(145 ÷ 1450)*	30 ÷ 280 *(435 ÷ 4060)*	80 ÷ 380 *(1160 ÷ 5510)*

**** Without setting request, it will be considered standard (black spring: 2175 psi).***

SEE PAGE 285 FOR PRICES

50% OFF ALL PRICES

VRF

Priority flow divider valve

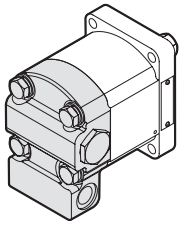

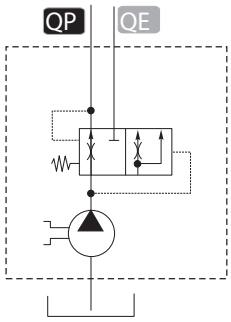

Exceeding flow to actuator or to tank

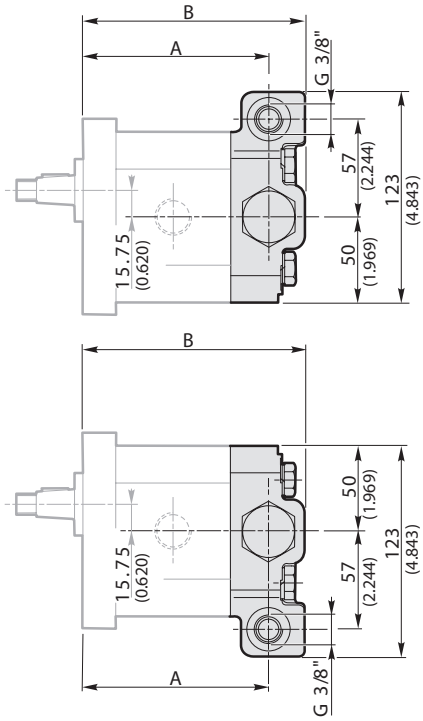

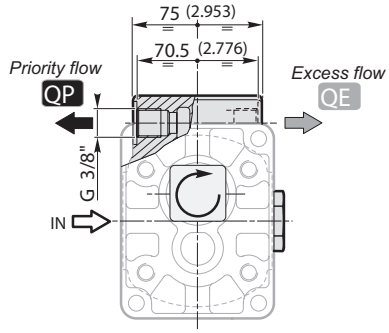

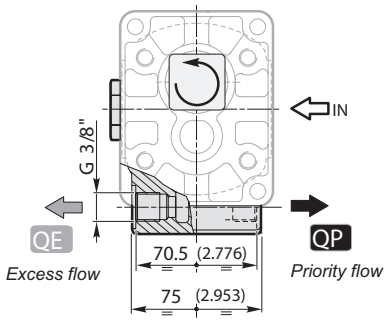

		2SP ... 4	2SP ... 6	2SP ... 8	2SP ... 11	2SP ... 14	2SP ... 16	2SP ... 19	2SP ... 22	2SP ... 26
A	Standard	91.8 (3.614)	95.1 (3.744)	99.3 (3.909)	103.4 (4.071)	108.4 (4.268)	112.6 (4.433)	117.6 (4.630)	122.6 (4.827)	128.4 (5.055)
	SAE AA	93.8 (3.693)	97.1 (3.823)	101.3 (3.988)	105.4 (4.150)	110.4 (4.346)	114.6 (4.512)	119.6 (4.709)	124.6 (4.906)	130.4 (5.134)
	E32 BX E32 CX	89.1 (3.508)	92.4 (3.638)	92.4 (3.638)	100.7 (3.965)	105.7 (4.161)	109.9 (4.327)	114.9 (4.524)	119.9 (4.720)	125.7 (4.949)
B	Standard	112.8 (4.441)	116.1 (4.571)	120.3 (4.736)	124.4 (4.898)	129.4 (5.094)	133.6 (5.260)	138.6 (5.457)	143.6 (5.654)	149.4 (5.882)
	SAE AA	114.8 (4.520)	118.1 (4.650)	122.3 (4.815)	126.4 (4.976)	131.4 (5.173)	135.6 (5.339)	140.6 (5.535)	145.6 (5.732)	151.4 (5.961)
	E32 BX E32 CX	110.1 (4.335)	113.4 (4.465)	117.6 (4.630)	121.7 (4.791)	126.7 (4.988)	130.9 (5.154)	135.9 (5.350)	140.9 (5.547)	146.7 (5.776)

Example of ordering code

2SP	A	14	D	SAE A	-	10	G	(VT)	VRF	(d)

VRF	Cover with V R F	VRF
(d)	Diameter of calibrated orifice	2.5 - 3 - 3.25 - 4 - 4.25 - 5.5 (See table)

SEE PAGE 269 FOR PORT SIZES AVAILABLE

d [mm]	Q [l/min] (US.gal/min)
2.5	5 (1.32)
3	7 (1.32)
3.25	8 (1.32)
4	11 (1.32)
4.25	14 (1.32)
5.5	21 (1.32)

SEE PAGE 285 FOR PRICES

VRF - VLP-I

Priority flow divider valve and pressure relief valve

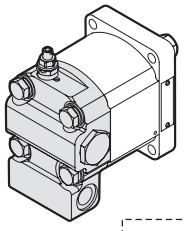

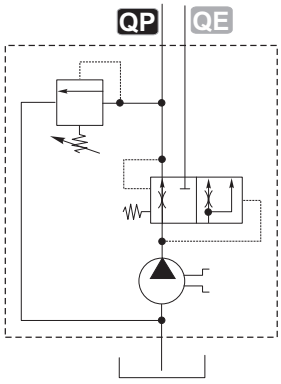

Exceeding flow to actuator or to tank

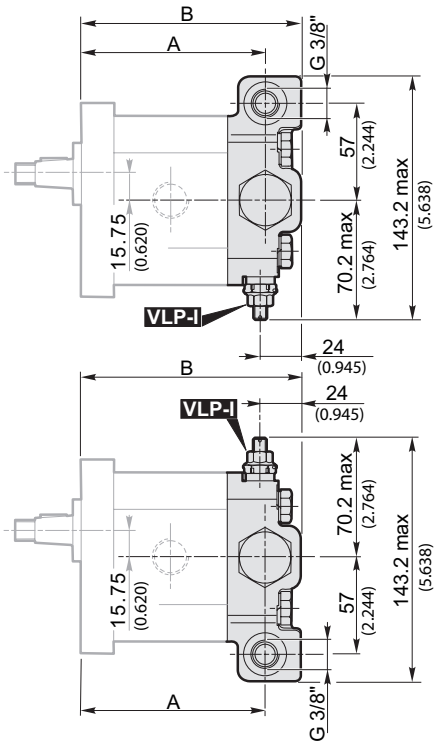

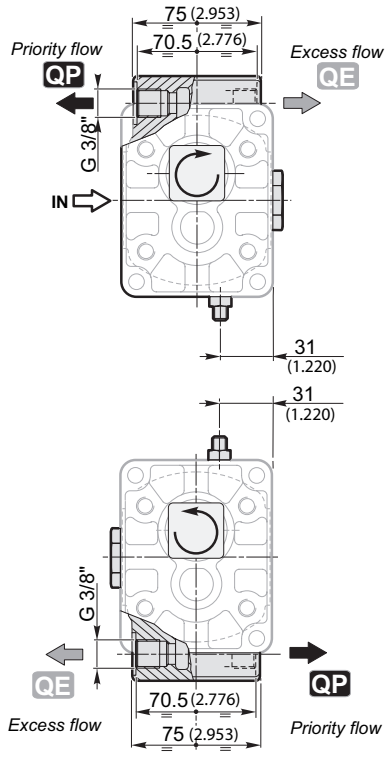

		2SP...4	2SP...6	2SP...8	2SP...11	2SP...14	2SP...16	2SP...19	2SP...22	2SP...26
A	Standard	91.8 *(3.614)*	95.1 *(3.744)*	99.3 *(3.909)*	103.4 *(4.071)*	108.4 *(4.268)*	112.6 *(4.433)*	117.6 *(4.630)*	122.6 *(4.827)*	128.4 *(5.055)*
	SAE AA	93.8 *(3.693)*	97.1 *(3.823)*	101.3 *(3.988)*	105.4 *(4.150)*	110.4 *(4.346)*	114.6 *(4.512)*	119.6 *(4.709)*	124.6 *(4.906)*	130.4 *(5.134)*
	E32 BX E32 CX	89.1 *(3.508)*	92.4 *(3.638)*	92.4 *(3.638)*	100.7 *(3.965)*	105.7 *(4.161)*	109.9 *(4.327)*	114.9 *(4.524)*	119.9 *(4.720)*	125.7 *(4.949)*
B	Standard	112.8 *(4.441)*	116.1 *(4.571)*	120.3 *(4.736)*	124.4 *(4.898)*	129.4 *(5.094)*	133.6 *(5.260)*	138.6 *(5.457)*	143.6 *(5.654)*	149.4 *(5.882)*
	SAE AA	114.8 *(4.520)*	118.1 *(4.650)*	122.3 *(4.815)*	126.4 *(4.976)*	131.4 *(5.173)*	135.6 *(5.339)*	140.6 *(5.535)*	145.6 *(5.732)*	151.4 *(5.961)*
	E32 BX E32 CX	110.1 *(4.335)*	113.4 *(4.465)*	117.6 *(4.630)*	121.7 *(4.791)*	126.7 *(4.988)*	130.9 *(5.154)*	135.9 *(5.350)*	140.9 *(5.547)*	146.7 *(5.776)*

Example of ordering code

2SP	A	14	D	SAE A	-	10	G	(VT)	VRF	(d)	-	VLP-I	(N)

VRF	*Cover with VRF*	**VRF**
(d)	*Diameter of calibrated orifice*	**2.5 - 3 - 3.25 - 4 - 4.25 - 5.5** *(See table)*
VLP-I	*Cover with VLP*	**VPL-I** *(at internal exhaust)*
(N)	*Spring type*	**B - N - R** *(See table)*

		Spring type B	N	R
		white spring	*black spring*	*red spring*
*Calibration fields**	[bar] *(psi)*	10 ÷ 100 *(145 ÷ 1450)*	30 ÷ 280 *(435 ÷ 4060)*	80 ÷ 380 *(1160 ÷ 5510)*
		The complete range can be obtained with additional thickness		

d [mm]	Q [l/min] *(US.gal/min)*
2.5	5 *(1.32)*
3	7 *(1.32)*
3.25	8 *(1.32)*
4	11 *(1.32)*
4.25	14 *(1.32)*
5.5	21 *(1.32)*

**** Without setting request, it will be considered standard (black spring: 2175 psi).***

SEE PAGE 269 FOR PORT SIZES AVAILABLE

SEE PAGE 285 FOR PRICES

Flange and cover in Aluminium

Technical data

Size	Displacement	Max. working pressure			Max. speed	Max. flow	Min. speed	Min. flow	Dimensions		Mass	Min. volumetric efficiency
		P1	P2	P3					A	B		
	[cm³/rev] (in³/rev)	[bar] (PSI)	[bar] (PSI)	[bar] (PSI)	[g/min] (rpm)	[lt/min] (Gal/min)	[g/min] (rpm)	[lt/min] (Gal/min)	[mm] (inch)	[mm] (inch)	[Kg] (lbs)	%
3SP A19	19 (1.16)	250 (3625)	270 (3915)	300 (4350)	3500	66.5 (17.57)	700	12.64 (3.34)	62.4 (2.457)	128.3 (5.051)	5.23 (11.53)	95*
3SP A22	22.3 (1.36)	240 (3480)	260 (3770)	290 (4205)	3500	78 (20.61)	700	14.83 (3.92)	63.9 (2.516)	131.3 (5.169)	5.36 (11.82)	
3SP A29	29.3 (1.79)	220 (3190)	240 (3480)	260 (3770)	3300	96.7 (25.55)	700	19.48 (5.15)	66.9 (2.634)	137.3 (5.406)	5.64 (12.44)	
3SP A33	32.9 (2.01)	220 (3190)	230 (3335)	260 (3770)	3300	108.6 (28.69)	700	21.88 (5.78)	68.4 (2.693)	140.3 (5.524)	5.78 (12.75)	
3SP A36	36.4 (2.22)	210 (3045)	230 (3335)	250 (3625)	3300	120.1 (31.73)	700	24.21 (6.40)	69.9 (2.752)	143.3 (5.642)	5.91 (13.03)	
3SP A44	43.5 (2.65)	200 (2900)	220 (3190)	240 (3480)	3000	130.5 (34.48)	700	28.93 (7.64)	72.9 (2.870)	149.3 (5.878)	6.19 (13.65)	
3SP A52	51.7 (3.15)	200 (2900)	210 (3045)	240 (3480)	3000	155.1 (40.98)	700	34.38 (9.08)	76.4 (3.008)	156.3 (6.154)	6.50 (14.33)	
3SP A62	61.1 (3.73)	180 (2610)	190 (2755)	200 (2900)	2500	152.7 (40.34)	700	40.63 (10.73)	80.4 (3.165)	164.3 (6.469)	6.87 (15.15)	

** Value collected during the testing at 1500 rpm)*

Example of ordering code

3SP	A	22	D	(H)	-	10	G	(VT)

3SP	*Pump type*	*see table*
A	*Flange and cover*	**A** = *Aluminium*
22	*Displacement*	*see table*
D	*Clockwise rotation*	**D** = *Clockwise rotation* **S** = *Anticlockwise rotation*
(H)	*Stiffening seal for low suction pressure*	*(optional)*
—		
10	*Shaft type*	**10 - 13 - 14**
G	*Connections type*	**G - N - W - F - T**
(VT)	*Optional*	**(VT)** *Viton seals (optional)* **VLP-I (N)** *Pressure relief valve (page A-63)*

Conn *Port Connections*

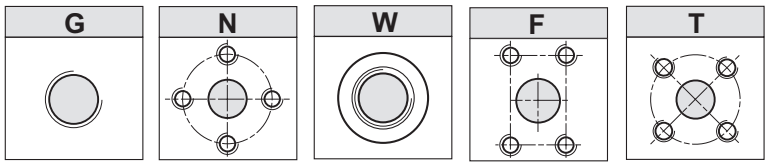

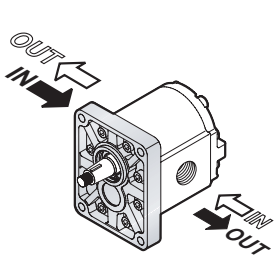

*The sign on the body identifies the **suction side** for the pumps.*

Rotation	
D	S

SEE PAGE 285 FOR PRICES

Flange and cover in Aluminium

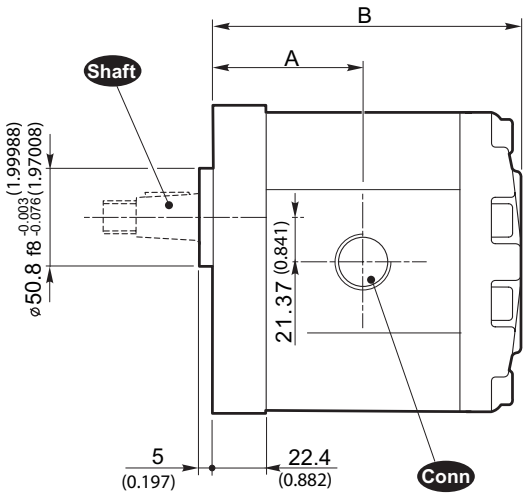

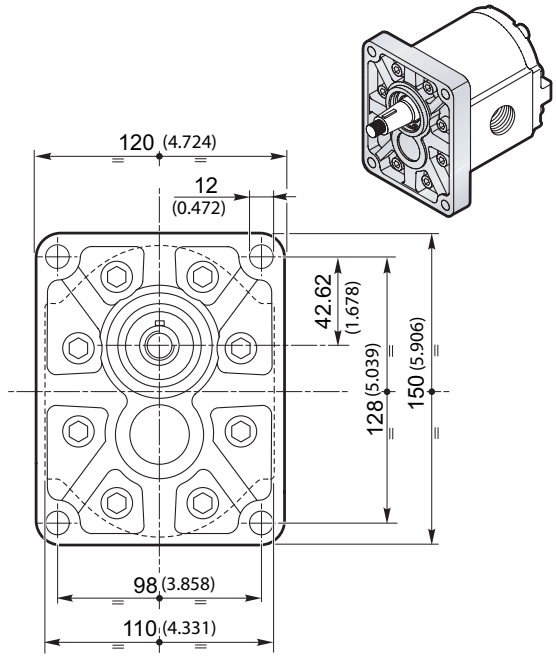

Shaft *Available shafts*

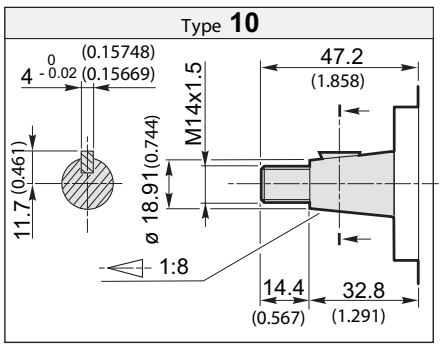

Torque **240 Nm** / ***177 ft·lbs***

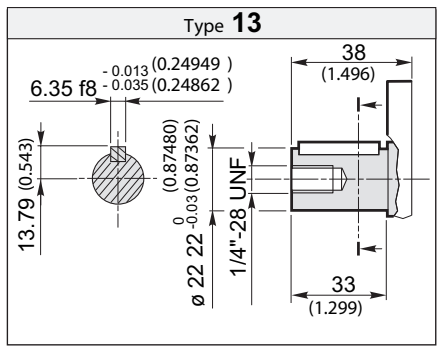

Torque **240 Nm** / ***177 ft·lbs***

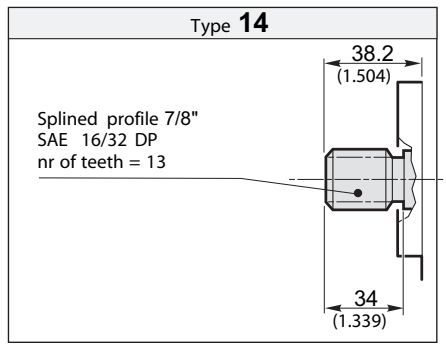

Torque **240 Nm** / ***177 ft·lbs***

SEE PAGE 283 FOR PORT SIZES AVAILABLE

SEE PAGE 285 FOR PRICES

50% OFF ALL PRICES

Flange and cover in Cast iron

Technical data

Size	Displacement	Max. working pressure			Max. speed	Max. flow	Min. speed	Min. flow	Dimensions		Mass	Min. volumetric efficiency
		P1	P2	P3					A	B		
	[cm³/rev] (in³/rev)	[bar] (PSI)	[bar] (PSI)	[bar] (PSI)	[g/min] (rpm)	[lt/min] (Gal/min)	[g/min] (rpm)	[lt/min] (Gal/min)	[mm] (inch)	[mm] (inch)	[Kg] (lbs)	%
3SP G19	19 (1.16)	270 (3915)	290 (4205)	320 (4640)	3500	66.5 (17.57)	700	12.64 (3.34)	62.4 (2.457)	128.3 (5.051)	7.53 (16.60)	95*
3SP G22	22.3 (1.36)	260 (3770)	280 (4060)	300 (4350)	3500	78 (20.61)	700	14.83 (3.92)	63.9 (2.516)	131.3 (5.169)	7.66 (16.89)	
3SP G29	29.3 (1.79)	240 (3480)	260 (3770)	280 (4060)	3300	96.7 (25.55)	700	19.48 (5.15)	66.9 (2.634)	137.3 (5.406)	7.94 (17.51)	
3SP G33	32.9 (2.01)	240 (3480)	260 (3770)	280 (4060)	3300	108.6 (28.69)	700	21.88 (5.78)	68.4 (2.693)	140.3 (5.524)	8.08 (17.82)	
3SP G36	36.4 (2.22)	230 (3335)	250 (3625)	270 (3915)	3300	120.1 (31.73)	700	24.21 (6.40)	69.9 (2.752)	143.3 (5.642)	8.21 (18.10)	
3SP G44	43.5 (2.65)	200 (2900)	220 (3190)	240 (3480)	3000	130.5 (34.48)	700	28.93 (7.64)	72.9 (2.870)	149.3 (5.878)	8.49 (18.72)	
3SP G52	51.7 (3.15)	200 (2900)	220 (3190)	240 (3480)	3000	155.1 (40.98)	700	34.38 (9.08)	76.4 (3.008)	156.3 (6.154)	8.80 (19.40)	
3SP G62	61.1 (3.73)	180 (2610)	190 (2755)	200 (2900)	2500	152.7 (40.34)	700	40.63 (10.73)	80.4 (3.165)	164.3 (6.469)	9.17 (20.22)	

** Value collected during the testing at 1500 rpm)*

Example of ordering code

3SP	G	22	D	(H)	-	10	G	(VT)

3SP	*Pump type*	*see table*
G	*Flange and cover*	**G** = Ghisa / *Cast iron*
22	*Displacement*	*see table*
D	*Clockwise rotation*	**D =** *Clockwise rotation* **S =** *Anticlockwise rotation*
(H)	*Stiffening seal for low suction pressure*	*(optional)*
—		
10	*Shaft type*	**10 - 13 - 14**
G	*Connections type*	**G - N - W - F - T**
(VT)	*Optional*	**(VT)** *Viton seals (optional)* **VLP-I (N)** *Pressure relief valve (page A-63)*

Conn *Port Connections*

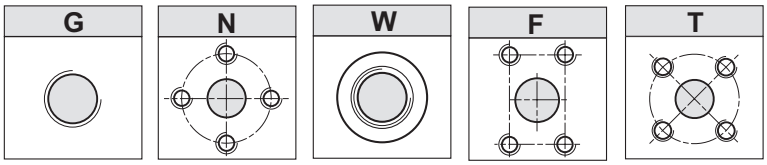

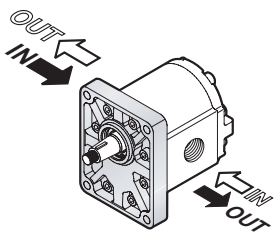

*The sign on the body identifies the **suction side** for the pumps.*

Rotation	
D	S

SEE PAGE 285 FOR PRICES

Flange and cover in Cast iron

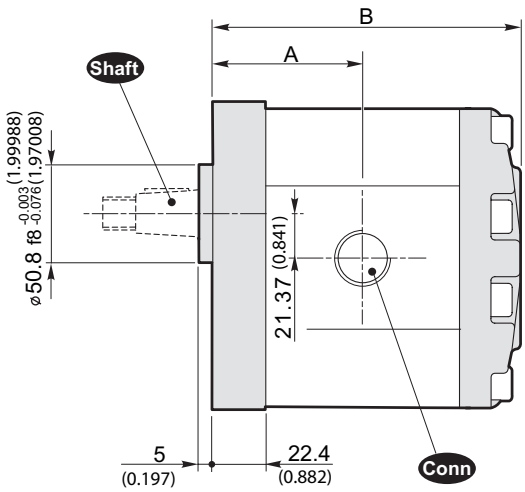

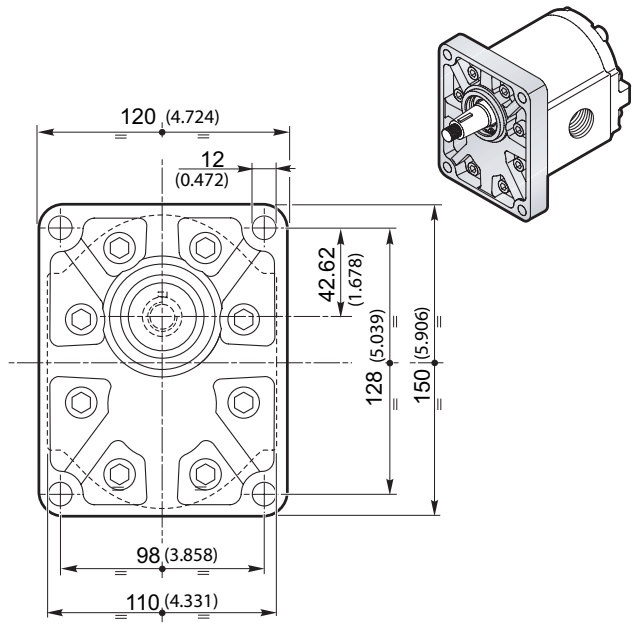

Shaft *Available shafts*

Type **10**

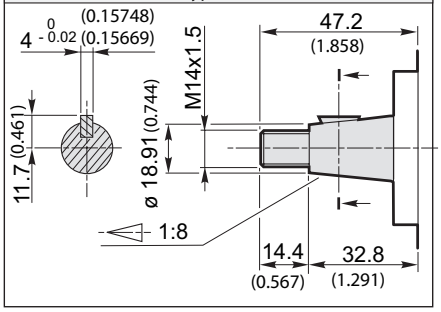

Torque **240 Nm** / ***177 ft·lbs***

Type **13**

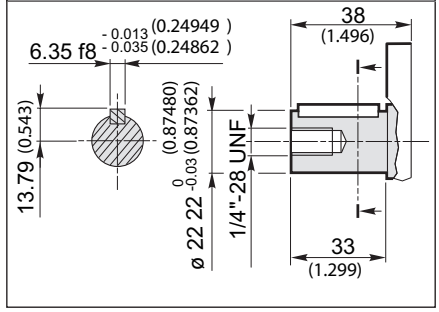

Torque **240 Nm** / ***177 ft·lbs***

Type **14**

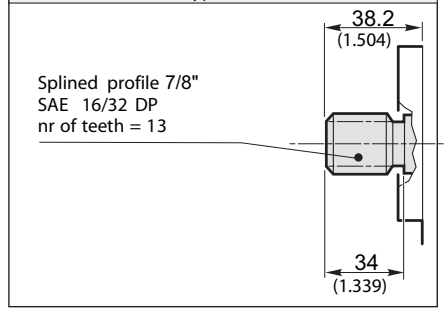

Torque **240 Nm** / ***177 ft·lbs***

SEE PAGE 283 FOR PORT SIZES AVAILABLE

SEE PAGE 285 FOR PRICES

50% OFF ALL PRICES

Flange and cover in Aluminium

Technical data

Size	Displacement [cm³/rev] (in³/rev)	Max. working pressure P1 [bar] (PSI)	P2 [bar] (PSI)	P3 [bar] (PSI)	Max. speed [g/min] (rpm)	Max. flow [lt/min] (Gal/min)	Min. speed [g/min] (rpm)	Min. flow [lt/min] (Gal/min)	Dimensions A [mm] (inch)	B [mm] (inch)	Mass [Kg] (lbs)	Min. volumetric efficiency %
3SP A19	19 (1.16)	250 (3625)	270 (3915)	300 (4350)	3500	66.5 (17.57)	700	12.64 (3.34)	59.4 (2.339)	125.3 (4.933)	5.23 (11.53)	95*
3SP A22	22.3 (1.36)	240 (3480)	260 (3770)	290 (4205)	3500	78 (20.61)	700	14.83 (3.92)	60.9 (2.398)	128.3 (5.051)	5.36 (11.82)	
3SP A29	29.3 (1.79)	220 (3190)	240 (3480)	260 (3770)	3300	96.7 (25.55)	700	19.48 (5.15)	63.9 (2.516)	134.3 (5.287)	5.64 (12.44)	
3SP A33	32.9 (2.01)	220 (3190)	230 (3335)	260 (3770)	3300	108.6 (28.69)	700	21.88 (5.78)	65.4 (2.575)	137.3 (5.406)	5.78 (12.75)	
3SP A36	36.4 (2.22)	210 (3045)	230 (3335)	250 (3625)	3300	120.1 (31.73)	700	24.21 (6.40)	66.9 (2.634)	140.3 (5.124)	5.91 (13.03)	
3SP A44	43.5 (2.65)	200 (2900)	220 (3190)	240 (3480)	3000	130.5 (34.48)	700	28.93 (7.64)	69.9 (2.752)	146.3 (5.760)	6.19 (13.65)	
3SP A52	51.7 (3.15)	200 (2900)	210 (3045)	240 (3480)	3000	155.1 (40.98)	700	34.38 (9.08)	73.4 (2.890)	153.3 (6.035)	6.50 (14.33)	
3SP A62	61.1 (3.73)	180 (2610)	190 (2755)	200 (2900)	2500	152.7 (40.34)	700	40.63 (10.73)	77.4 (3.047)	161.3 (6.350)	6.87 (15.15)	

** Value collected during the testing at 1500 rpm)*

Example of ordering code

3SP	A	22	D	(H)	SAEB	-	14	G	(VT)

3SP	*Pump type*	*see table*
A	*Flange and cover*	**A** = *Aluminium*
22	*Displacement*	*see table*
D	*Clockwise rotation*	**D =** *Clockwise rotation* **S =** *Anticlockwise rotation*
(H)	*Stiffening seal for low suction pressure*	*(optional)*
SAEB	*Flange type*	**SAE B - SAE B - OR**
—		
14	*Shaft type*	**10 - 13 - 14**
G	*Connections type*	**G - N - W - F - T**
(VT)	*Optional*	**(VT)** *Viton seals (optional)* **VLP-I (N)** *Pressure relief valve (page A-63)*

Conn *Port Connections*

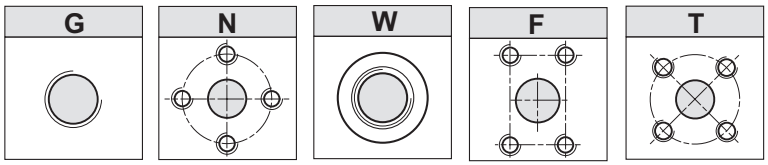

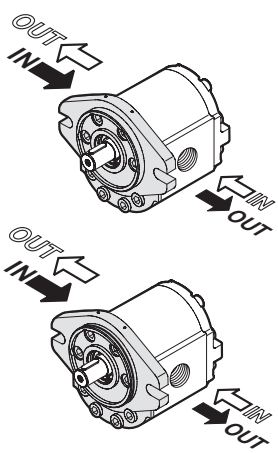

*The sign on the body identifies the **suction side** for the pumps.*

Rotation	
D	**S**

SEE PAGE 285 FOR PRICES

Flange and cover in Aluminium

SAE B-OR

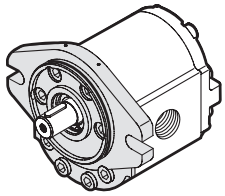

SAE B

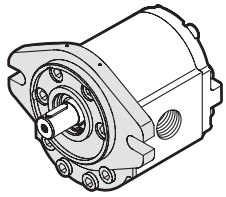

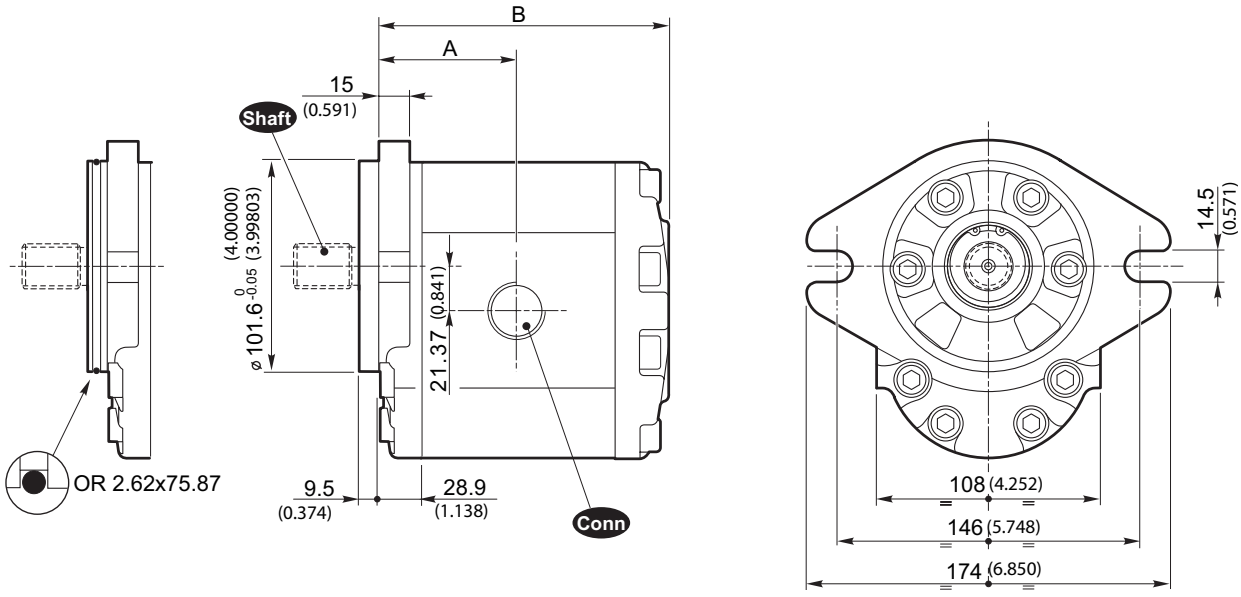

Shaft *Available shafts*

Type **10**

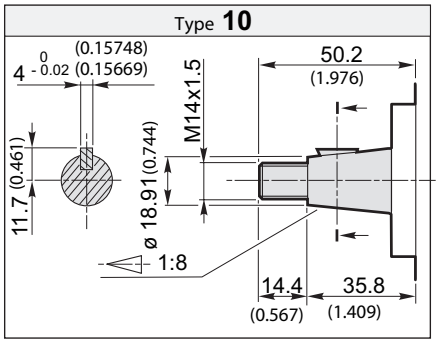

Torque **240 Nm** / ***177 ft·lbs***

Type **13**

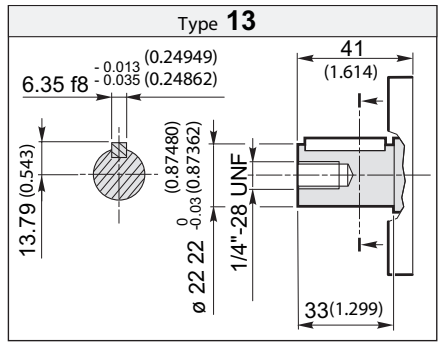

Torque **240 Nm** / ***177 ft·lbs***

Type **14**

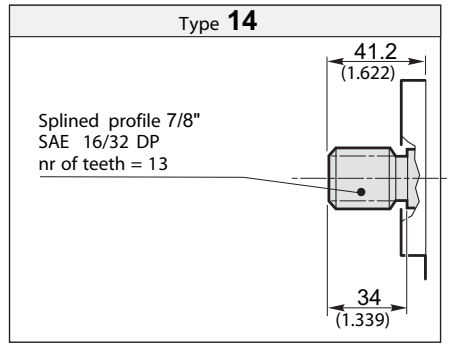

Torque **240 Nm** / ***177 ft·lbs***

SEE PAGE 283 FOR PORT SIZES AVAILABLE

SEE PAGE 285 FOR PRICES

Flange and cover in Cast iron

Technical data

Size	Displacement	Max. working pressure			Max. speed	Max. flow	Min. speed	Min. flow	Dimensions		Mass	Min. volumetric efficiency
		P1	P2	P3					A	B		
	[cm³/rev] (in³/rev)	[bar] (PSI)	[bar] (PSI)	[bar] (PSI)	[g/min] (rpm)	[lt/min] (Gal/min)	[g/min] (rpm)	[lt/min] (Gal/min)	[mm] (inch)	[mm] (inch)	[Kg] (lbs)	%
3SP G19	19 (1.16)	270 (3915)	290 (4205)	320 (4640)	3500	66.5 (17.57)	700	12.64 (3.34)	59.4 (2.339)	125.3 (4.933)	7.59 (16.74)	95*
3SP G22	22.3 (1.36)	260 (3770)	280 (4060)	300 (4350)	3500	78 (20.61)	700	14.83 (3.92)	60.9 (2.398)	128.3 (5.051)	7.72 (17.02)	
3SP G29	29.3 (1.79)	240 (3480)	260 (3770)	280 (4060)	3300	96.7 (25.55)	700	19.48 (5.15)	63.9 (2.516)	134.3 (5.287)	8.00 (17.64)	
3SP G33	32.9 (2.01)	240 (3480)	260 (3770)	280 (4060)	3300	108.6 (28.69)	700	21.88 (5.78)	65.4 (2.575)	137.3 (5.406)	8.14 (17.95)	
3SP G36	36.4 (2.22)	230 (3335)	250 (3625)	270 (3915)	3300	120.1 (31.73)	700	24.21 (6.40)	66.9 (2.634)	140.3 (5.524)	8.27 (18.24)	
3SP G44	43.5 (2.65)	200 (2900)	220 (3190)	240 (3480)	3000	130.5 (34.48)	700	28.93 (7.64)	69.9 (2.752)	146.3 (5.760)	8.55 (18.85)	
3SP G52	51.7 (3.15)	200 (2900)	220 (3190)	240 (3480)	3000	155.1 (40.98)	700	34.38 (9.08)	73.4 (2.890)	153.3 (6.035)	8.86 (19.54)	
3SP G62	61.1 (3.73)	180 (2610)	190 (2755)	200 (2900)	2500	152.7 (40.34)	700	40.63 (10.73)	77.4 (3.047)	161.3 (6.350)	9.23 (20.35)	

** Value collected during the testing at 1500 rpm)*

Example of ordering code

3SP	G	22	D	(H)	SAEB	-	14	G	(VT)

3SP	*Pump type*	*see table*
G	*Flange and cover*	**G** = *Cast iron*
22	*Displacement*	*see table*
D	*Clockwise rotation*	**D =** *Clockwise rotation* **S =** *Anticlockwise rotation*
(H)	*Stiffening seal for low suction pressure*	*(optional)*
SAEB	*Flange type*	**SAE B - SAE B - OR**
—		
14	*Shaft type*	**10 - 13 - 14**
G	*Connections type*	**G - N - W - F - T**
(VT)	*Optional*	**(VT)** *Viton seals (optional)* **VLP-I (N)** *Pressure relief valve (page A-63)*

Conn *Port Connections*

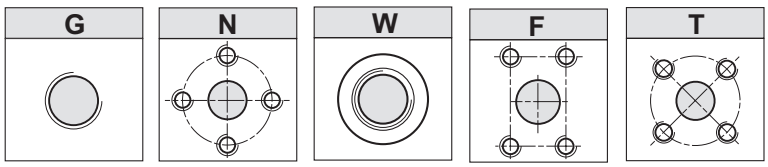

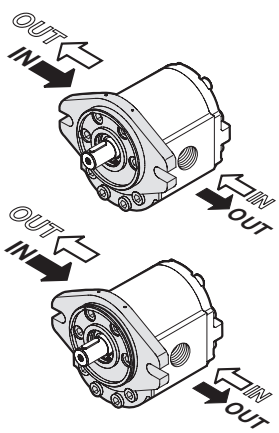

*The sign on the body identifies the **suction side** for the pumps.*

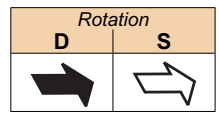

SEE PAGE 285 FOR PRICES

Flange and cover in Cast iron

SAE B-OR **SAE B**

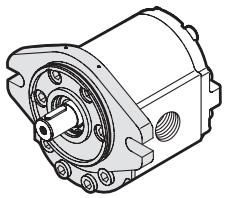

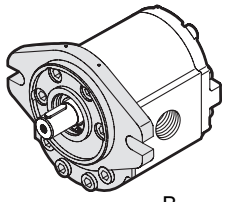

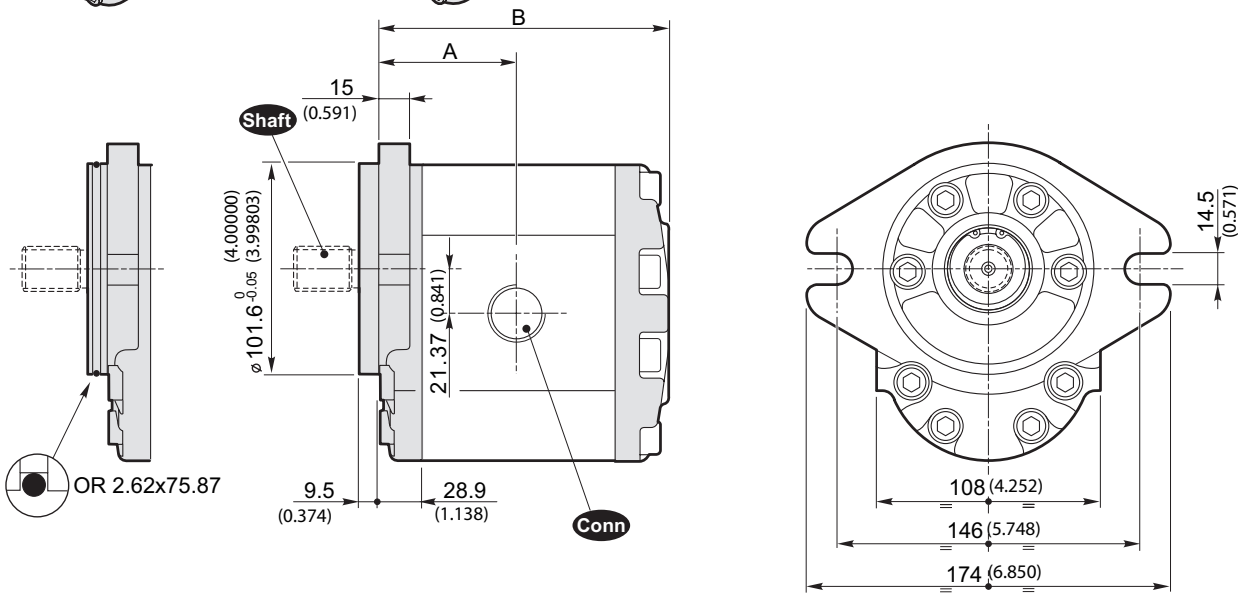

Shaft *Available shafts*

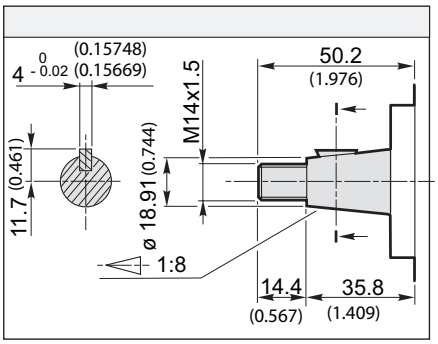

Torque **240 Nm** / ***177 ft·lbs***

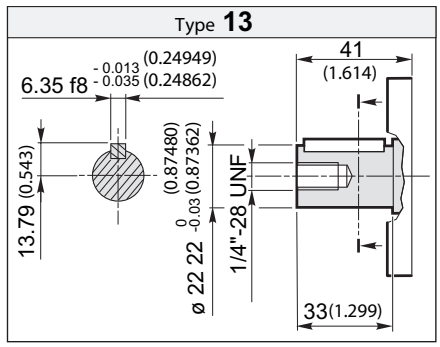

Torque **240 Nm** / ***177 ft·lbs***

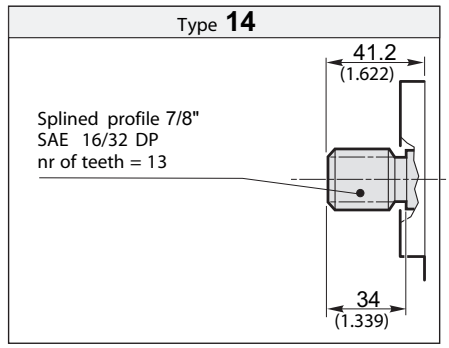

Torque **240 Nm** / ***177 ft·lbs***

SEE PAGE 283 FOR PORT SIZES AVAILABLE

SEE PAGE 285 FOR PRICES

50% OFF ALL PRICES

Technical data

Size	Displacement	Max. working pressure			Max. speed	Max. flow	Min. speed	Min. flow	Dimensions		Mass	Min. volumetric efficiency
		P1	P2	P3					A	B		
	[cm³/rev] (in³/rev)	[bar] (PSI)	[bar] (PSI)	[bar] (PSI)	[g/min] (rpm)	[lt/min] (Gal/min)	[g/min] (rpm)	[lt/min] (Gal/min)	[mm] (inch)	[mm] (inch)	[Kg] (lbs)	%
3SP G19	19 (1.16)	270 (3915)	290 (4205)	320 (4640)	3500	66.5 (17.57)	700	12.64 (3.34)	110.5 (4.350)	176.4 (6.945)	7.58 (16.71)	95*
3SP G22	22.3 (1.36)	260 (3770)	280 (4060)	300 (4350)	3500	78 (20.61)	700	14.83 (3.92)	112.0 (4.409)	179.4 (7.063)	7.72 (17.02)	
3SP G29	29.3 (1.79)	240 (3480)	260 (3770)	280 (4060)	3300	96.7 (25.55)	700	19.48 (5.15)	115.0 (4.528)	185.4 (7.299)	8.0 (17.64)	
3SP G33	32.9 (2.01)	240 (3480)	260 (3770)	280 (4060)	3300	108.6 (28.69)	700	21.88 (5.78)	116.5 (4.587)	188.4 (7.417)	8.14 (17.95)	
3SP G36	36.4 (2.22)	230 (3335)	250 (3625)	270 (3915)	3300	120.1 (31.73)	700	24.21 (6.40)	118.0 (4.646)	191.4 (7.535)	8.28 (18.26)	
3SP G44	43.5 (2.65)	200 (2900)	220 (3190)	240 (3480)	3000	130.5 (34.48)	700	28.93 (7.64)	121.0 (4.764)	197.4 (7.772)	8.55 (18.85)	
3SP G52	51.7 (3.15)	200 (2900)	220 (3190)	240 (3480)	3000	155.1 (40.98)	700	34.38 (9.08)	124.5 (4.902)	204.4 (8.047)	8.88 (19.58)	
3SP G62	61.1 (3.73)	180 (2610)	190 (2755)	200 (2900)	2500	152.7 (40.34)	700	40.63 (10.73)	128.5 (5.059)	212.4 (8.362)	9.25 (20.40)	

** Value collected during the testing at 1500 rpm)*

Example of ordering code

3SP	G	22	D	ZFC	-	24	G	(VT)

3SP	*Pump type*	*see table*
G	*Flange and cover*	**G** = *Cast iron*
22	*Displacement*	*see table*
D	*Clockwise rotation*	**D =** *Clockwise rotation* **S =** *Anticlockwise rotation*
ZFC	*Flange type*	**SAE B - SAE B - OR**
—		
14	*Shaft type*	**10 - 13 - 14**
G	*Connections type*	**G - N - W - F - T**
(VT)	*Optional*	**(VT)** *Viton seals (optional)*

Conn *Port Connections*

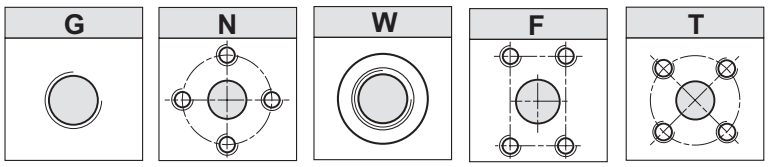

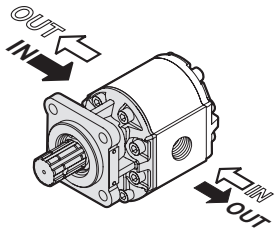

The sign on the body identifies the ***suction side*** *for the pumps.*

Rotation	
D	**S**

SEE PAGE 285 FOR PRICES

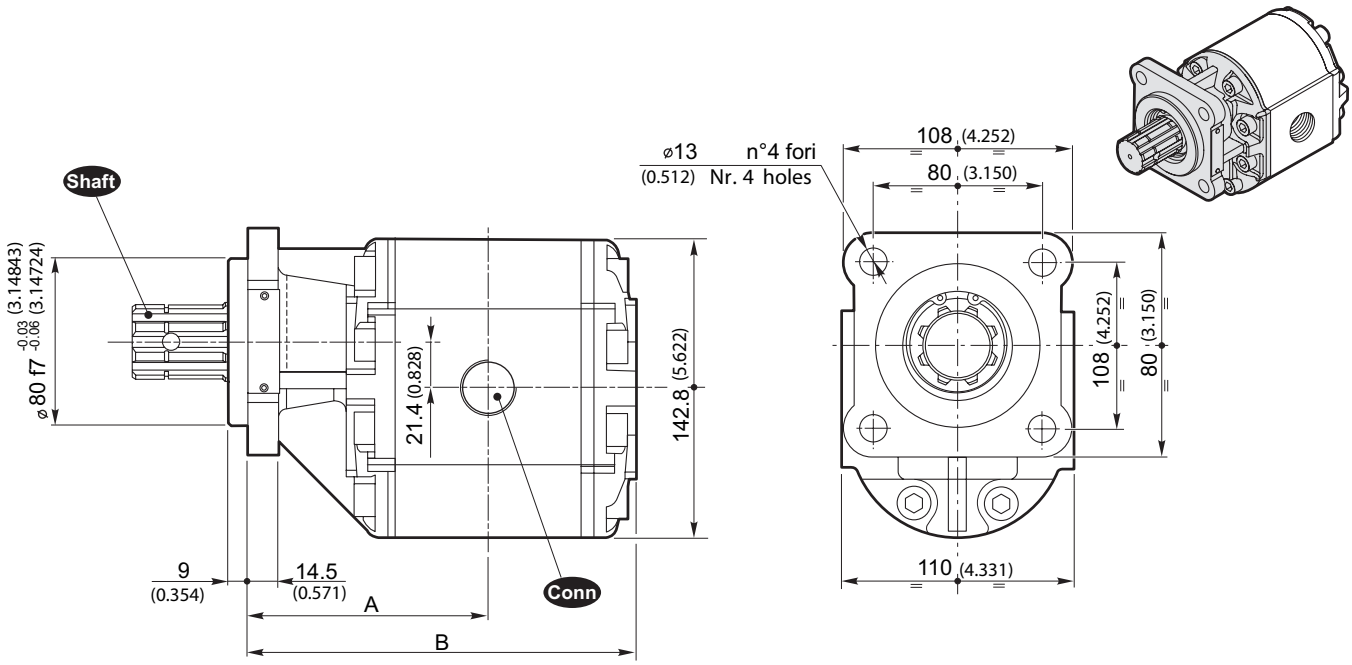

Shaft *Available shafts*

Type **24**

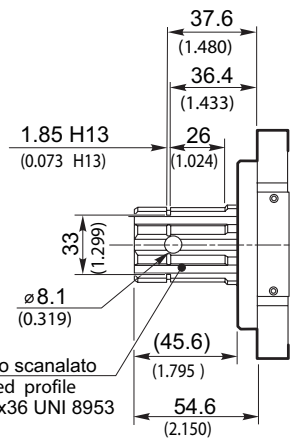

Torque **240 Nm** / ***177 ft·lbs***

SEE PAGE 283 FOR PORT SIZES AVAILABLE

SEE PAGE 285 FOR PRICES

50% OFF ALL PRICES

G

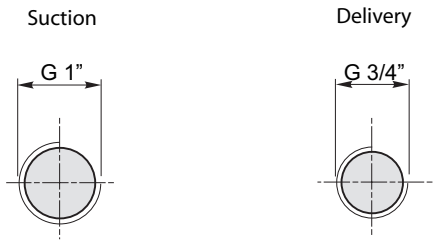

N

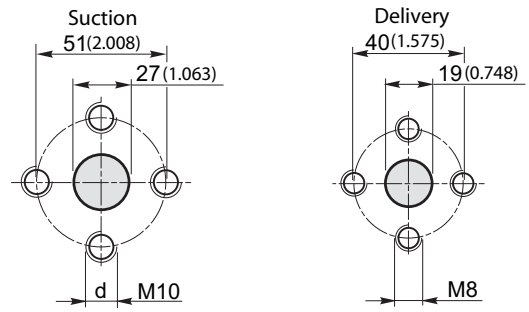

W

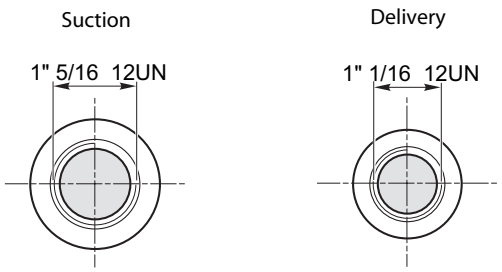

F

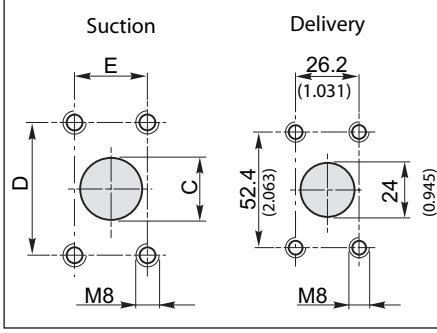

Size 19 ÷ 36		
C	**D**	**E**
27 (1.063)	52.4 (2.063)	26.2 (1.031)

Size 44 ÷ 62		
C	**D**	**E**
42 (1.654)	35.6 (1.402)	69.8 (2.748)

T

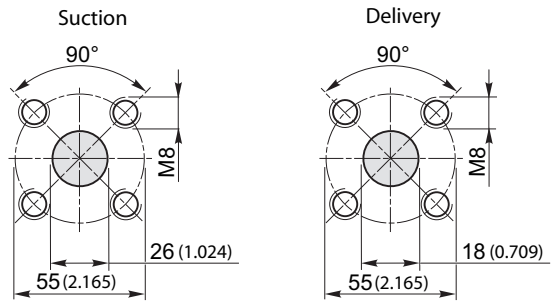

*The sign on the body identifies the **suction side** for the pumps.*

Port Connection positions

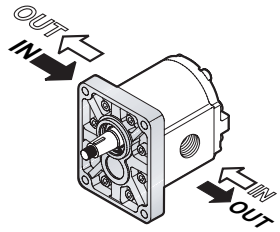

Rotation	
D	**S**
➡	⇨

SEE PAGE 285 FOR PRICES

VLP- I (N)

Pressure relief valve with internal exhaust

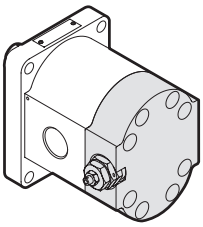

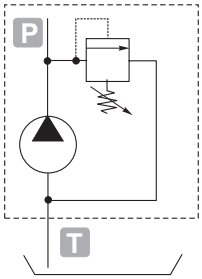

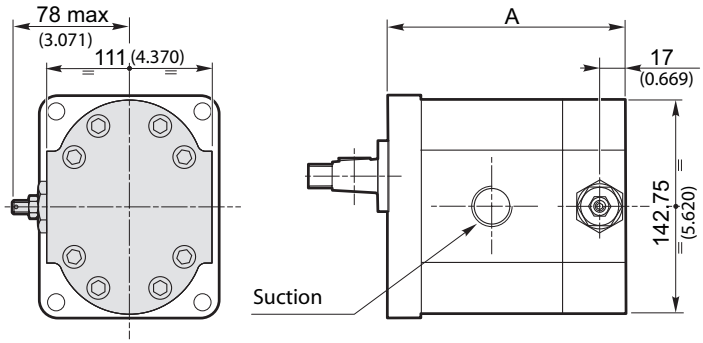

	A		
	Standard	SAE AA	E32 BX E32 CX
3SP A19	127.3 *(5.012)*	129.3 *(5.091)*	124.6 *(4.906)*
3SP A22	130.3 *(5.130)*	132.3 *(5.209)*	127.6 *(5.024)*
3SP A29	136.3 *(5.366)*	138.3 *(5.445)*	133.6 *(5.260)*
3SP A33	139.3 *(5.484)*	141.3 *(5.563)*	136.6 *(5.378)*
3SP A36	142.3 *(5.602)*	144.3 *(5.681)*	139.6 *(5.496)*
3SP A44	148.3 *(5.839)*	150.3 *(5.917)*	145.6 *(5.732)*
3SP A52	155.3 *(6.114)*	157.3 *(6.193)*	152.6 *(6.008)*
3SP A62	163.3 *(6.429)*	165.3 *(6.508)*	160.6 *(6.323)*

Warning.
The pressure relief valve can be applied by substituting the rear cover.
It is supplied only with aluminium flange and cover.
The showed pump is anticlockwise rotation.

The opening of the pressure relief valve should be carry out for times not over 7" each minute to avoid the overheating of the pump.

Example of ordering code

3SP	A	22	D	SAE B	-	10	G	(VT)	VLP-I	(N)

VLP-I	*Cover with VLP*	**VPL-I** *(at internal exhaust)*
(N)	*Spring type*	**B - N - R** *(See table)*

		Spring type		
		B	**N**	**R**
		white spring	*black spring*	*red spring*
*Calibration fields**	[bar] *(psi)*	10 ÷ 100 *(145 ÷ 1450)*	30 ÷ 280 *(435 ÷ 4060)*	80 ÷ 380 *(1160 ÷ 5510)*

**** Without setting request, it will be considered standard (black spring: 2175 psi).***

SEE PAGE 283 FOR PORT SIZES AVAILABLE

SEE PAGE 285 FOR PRICES

50% OFF ALL PRICES

GROUP 1 GEAR PUMPS + GEAR MOTORS PRICE LIST

DESCRIPTION	4 BOLT FLANGE STANDARD	FLANGE MINI-POWERPACK	FLANGE E32C FLANGE E32B	2 BOLT FLANGE SAE AA
PUMP 1SPA 0,9	£164.97	£164.97	£173.20	£173.20
PUMP 1SPA 1,2	£164.97	£164.97	£173.20	£173.20
PUMP 1SPA 1,6	£164.97	£164.97	£173.20	£173.20
PUMP 1SPA 2,0	£164.97	£164.97	£173.20	£173.20
PUMP 1SPA 2,5	£168.83	£168.83	£177.26	£177.26
PUMP 1SPA 3,2	£168.83	£168.83	£177.26	£177.26
PUMP 1SPA 3,7	£168.83	£168.83	£177.26	£177.26
PUMP 1SPA 4,2	£168.83	£168.83	£177.26	£182.11
PUMP 1SPA 5,0	£173.44	£173.44	£182.11	£182.11
PUMP 1SPA 6,3	£173.44	£173.44	£182.11	£182.11
PUMP 1SPA 7,8	£178.64	£178.64	£187.57	£187.57
PUMP 1SPA 9,8	£184.01	£184.01	£193.21	£193.21

ADD-ON EXTRAS (NOT SPARES PRICES)	
SEAL FOR HIGHT PRESSURE (K)	£5.78
STND and SAE AA PUMP with OR	£5.65
SHAFT SEAL (EB32C)	£6.08
SHAFT SEAL (H)	£7.32
VITON SEAL	£30.07
END-COVER with MAIN RELIEF VALVE INTERNAL EXHAUST	£65.78

ADDITIONAL PRICES FOR PRICING UP TANEM PUMPS. GROUP 1 BASED	
KIT MULTIPLE PUMP 1P + 1P Standard	£78.62
DISJUNCTOR VALVE ON INTERMEDIATE FLANGE	£212.06
COMMON SUCTION (1st 2nd and 3rd pump)	additional price by 5% on multiple pump

GROUP 2 GEAR PUMPS + GEAR MOTORS PRICE LIST

FOR TRIPLE AND QUADRUPLE KEEP ADDING 'KIT MULTIPLE PUMP'
• TANDEM = 1 KIT • TRIPLE = 2 KITS
• QUADRUPLE = 3 KITS

DESCRIPTION	4 BOLT ALUMINIUM FLANGE STANDARD	ALUMINIUM FLANGE B50-B80-E52-M52-SAEA	ALUMINIUM FLANGE PRKS	4 BOLT CAST-IRON FLANGE STANDARD	2 BOLT CAST-IRON FLANGE SAE A
PUMP 2 SP 4	£204.28	£214.30	£247.75	£231.27	£241.27
PUMP 2 SP 6	£204.28	£214.30	£247.75	£231.27	£241.27
PUMP 2 SP 8	£204.28	£214.30	£247.75	£231.27	£241.27
PUMP 2 SP 11	£210.45	£214.30	£253.91	£238.18	£248.22
PUMP 2 SP 14	£210.45	£214.30	£253.91	£238.18	£248.22
PUMP 2 SP 16	£210.45	£214.30	£253.91	£238.18	£248.22
PUMP 2 SP 19	£217.38	£228.18	£260.87	£244.37	£255.16
PUMP 2 SP 22	£217.38	£228.18	£260.87	£244.37	£255.16
PUMP 2 SP 26	£222.77	£233.56	£266.25	£249.75	£260.55

ADD-ON EXTRAS (NOT SPARES PRICES)	
SUPPORT INCORPORATED IN THE FLANGE	£96.34
SUPPORT Ø 50,8 - shaft Ø 22	£106.51
FLANGE WITH BEARING (for B50C and B80C)	£35.46
FLANGE WITH O-Ring	£8.47
SHAFT SEAL (H)	£10.02
SEAL FOR HIGH PRESSURE (K) - 30 bar	£5.78
SEAL FOR HIGH PRESSURE (KK) - 100 bar	£11.60
SHAFT SEAL (MC52CX)	£6.73
SPECIAL KEY draw.25053	£5.97
VITON SEAL	£30.07
END-COVER with MAIN RELIEF VALVE INTERNAL EXHAUST	£70.14
END-COVER with MAIN RELIEF VALVE EXTERNAL EXHAUST	£74.78

ADD-ON EXTRAS (NOT SPARES PRICES)	
UNIDIRECTIONAL MOTOR (CLOCKWISE OR ANTICLOCKWISE MOTOR)	£10.02
BIDIRECTIONAL PUMP AND MOTOR (REVERSIBLE MOTOR)	£49.33
END COVER TWO SPEED (ON UNID. MOTOR)	£322.99
ANTICAVITATION VALVE VA MOTORE	£89.04
SPECIAL COVER WITH PRIORITY VALVE - VRF	£180.98
SPECIAL COVER WITH PRIORITY VALVE AND PRESSURE VALVE - VRF+VLP	£214.13

ADDITIONAL PRICES FOR PRICING UP TAMDEM PUMPS. GROUP 2 BASED		
KIT MULTIPLE PUMP	GR.2SP + GR.1	£90.20
KIT MULTIPLE PUMP	GR.2SP + GR.2SP	£90.20
Common suction (1st 2nd and 3rd pump)	additional price by 5% on multiple pump	

GROUP 3 GEAR PUMPS + GEAR MOTORS PRICE LIST

FOR TRIPLE AND QUADRUPLE KEEP ADDING 'KIT MULTIPLE PUMP'
• TANDEM = 1 KIT • TRIPLE = 2 KITS
• QUADRUPLE = 3 KITS

DESCRIPTION	4 BOLT ALUMINIUM FLANGE STANDARD	2 BOLT ALUMINIUM FLANGE SAE B	4 BOLT CAST-IRON FLANGE	2 BOLT CAST-IRON FLANGE SAE B
PUMP 3 SP 19	£392.37	£413.18	£439.38	£466.93
PUMP 3 SP 22	£392.37	£413.18	£439.38	£466.93
PUMP 3 SP 29	£404.70	£425.53	£451.73	£479.00
PUMP 3 SP 33	£404.70	£425.53	£451.73	£479.00
PUMP 3 SP 36	£404.70	£425.53	£451.73	£479.00
PUMP 3 SP 44	£417.04	£437.86	£464.06	£492.88
PUMP 3 SP 52	£417.04	£437.86	£464.06	£492.88
PUMP 3 SP 62	£437.86	£458.66	£484.88	£514.20

ADD-ON EXTRAS (NOT SPARES PRICES)	
FLANGE WITH O-Ring	£12.71
SHAFT SEAL (H)	£10.02
SEAL FOR HIGHT PRESSURE (K)	£5.78
VITON SEAL	£31.60
UNIDIRECTIONAL MOTOR	£49.33
BIDIRECTIONAL MOTOR	£107.14
SUPPORT ZFC	£183.43
END-COVER WITH MAIN RELIEF VALVE	£93.28

ADDITIONAL PRICES FOR PRICING UP TAMDEM PUMPS. GROUP 3 BASED		
KIT MULTIPLE PUMP	GR.3SP + GR.1SP	£131.80
KIT MULTIPLE PUMP	GR.3SP + GR.2SP	£140.37
KIT MULTIPLE PUMP	GR.3SP + GR.3SP	£148.78

FOR TRIPLE AND QUADRUPLE KEEP ADDING 'KIT MULTIPLE PUMP'
• TANDEM = 1 KIT • TRIPLE = 2 KITS
• QUADRUPLE = 3 KITS

MULTIPLE GEAR PUMPS

TECHNICAL FEATURES.....287
DESIGNATION.....288
GROUP 1 + GROUP 1.....289
GROUP 2 + GROUP 1.....291
GROUP 2 + GROUP 2.....294
GROUP 3 + GROUP 1.....296
GROUP 3 + GROUP 2.....298
GROUP 3 + GROUP 3.....300
GROUP 1 GEAR PUMPS + GEAR MOTORS PRICE LIST.....301
GROUP 2 GEAR PUMPS + GEAR MOTORS PRICE LIST.....301
GROUP 3 GEAR PUMPS + GEAR MOTORS PRICE LIST.....301

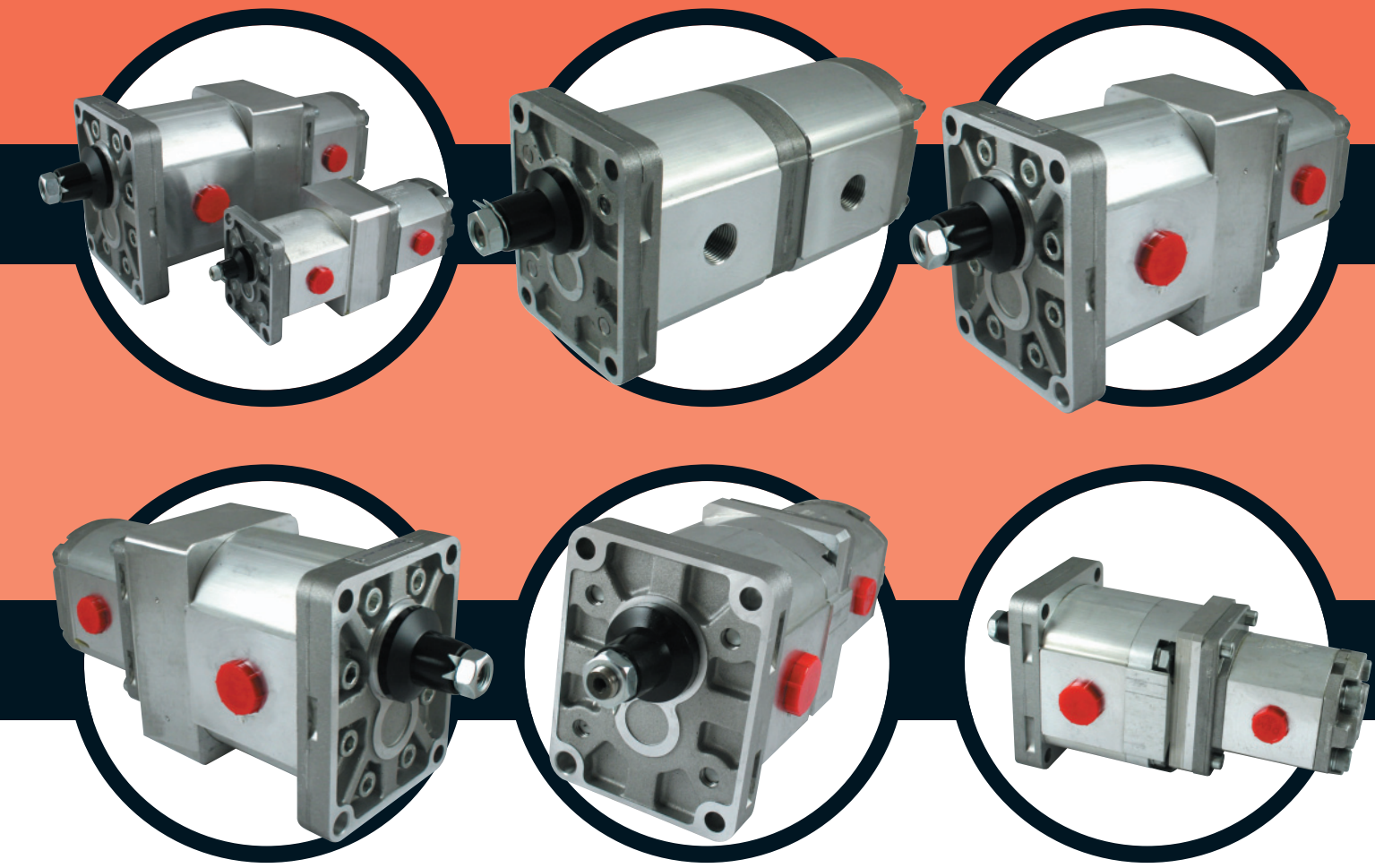

Galtech s.p.a
OLEODINAMICA
Gruppo Gallinari

50% OFF ALL PRICES

DESCRIPTION

The multiple pumps are avaitable in STANDARD and T.C. (short-tandem) versions.
The versatility of our pumps permits the assembling of a multiple pump using a single pump and making only a simply operation of disassembly/asembly.
- *All our standard pumps are already present to engage another pump.*
- *A very limited quantity of kit "flange connections and accessories" gives a small stock value and mainly a rapid assistance to final users.*

TECHNICAL FEATURES

- *Performance of units composing multiple pumps are the same as these of the corresponding single pumps.*
- *Max. rotation speed of multiple pumps is given by slower pump.*
- *Max. torque absorbed by each simple unit to grant a working limit at max. working pressure is calculated in the following way:*

$$M = \frac{c \times p}{64}$$

in which:
M = Max absorbed input torque (ft·lbs)
c = Pump displacement (cm^3/rev)
p = Max. working pressure (bar)

- *The total of the torque absorbed by each pump shall be not in excess of the max. allowed torque on main shaft (see below scheme)*
  The max. torque absorbed by the follow pumps shall be not in excess of the torque transmitted by the rear draft gear.
- *The power absorbed by the multiple pump is determined from total powers that each pump absorbed and it is calculated as follow:*

$$P = \frac{c \times n \times p}{603000}$$

in which:
P = Max. absorbed power (Kw)
c = Pump displacement (cm^3/rev)
n = Max. working speed (rpm)
p = Max. working pressure (bar)

	Torque transmitted by the draft pump [Nm] (*ft·lbs*)								*Torque transmitted by rear draft* [Nm] (*ft·lbs*)
	Type 10	***Type 11***	***Type 12***	***Type 13***	***Type 14***	***Type 15***	***Type 16***	***Type 17/27***	
GR 1	18 *(13.3)*	18 *(13.3)*		30 *(22.1)*	30 *(22.1)*	30 *(22.1)*		12 *(8.9)*	18 *(13.3)*
GR 2	98 *(72.3)*	98 *(72.3)*	98 *(72.3)*	98 *(72.3)*	98 *(72.3)*	98 *(72.3)*	98 *(72.3)*	70 *(51.6)*	75 *(55.3)*
GR 3	240 *(177)*			240 *(177)*	240 *(177)*				240 *(177)*
GR 4	750 *(553)*								750 *(553)*

ORDERING CODE – TANDEMS

Tandem STANDARD

Are possibile different combinations of all the group pumps (Gr.1 - Gr.2 - Gr.3 and Gr.4).
The suction of each pump is independent.

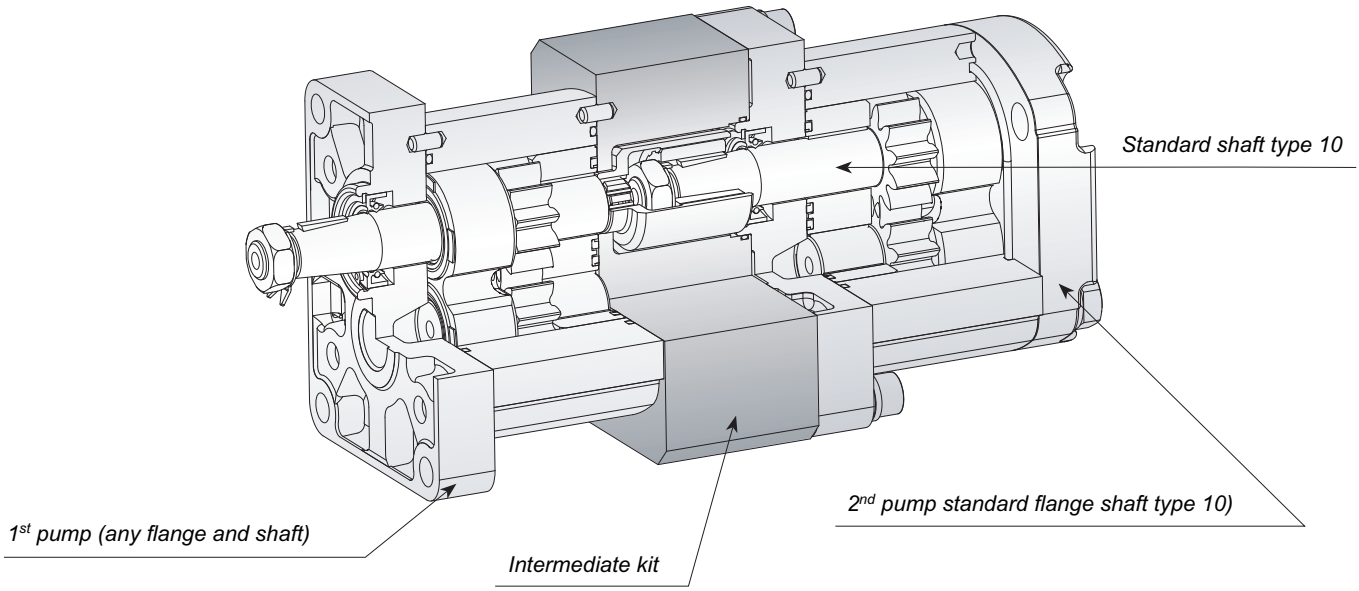

Example of ordering code

2SP A14	+	1SP A4.2	D	SAE A	-	10	G	(VT)

2SP A14	*First pump type*	
1SP A4.2	*Second pump type*	
D	*Clockwise rotation*	**D** = *Clockwise rotation* **S** = *Anticlockwise rotation*
SAE A	*Flange and version first pump flange*	*See corresponding single pump*
10	*Shaft type first pump*	
G	*Connections type*	
(VT)	*Optional*	

Example of ordering code

3SP A36	+	2SP A14	+	1SP A3.2	D	SAE B	-	10	G	(VT)

3SP A36	*First pump type*	
2SP A14	*Second pump type*	
1SP A3.2	*Third pump type*	
D	*Clockwise rotation*	**D** = *Clockwise rotation* **S** = *Anticlockwise rotation*
SAE B	*Flange and version first pump flange*	*See corresponding single pump*
10	*Shaft type first pump*	
G	*Connections type*	
(VT)	*Optional*	

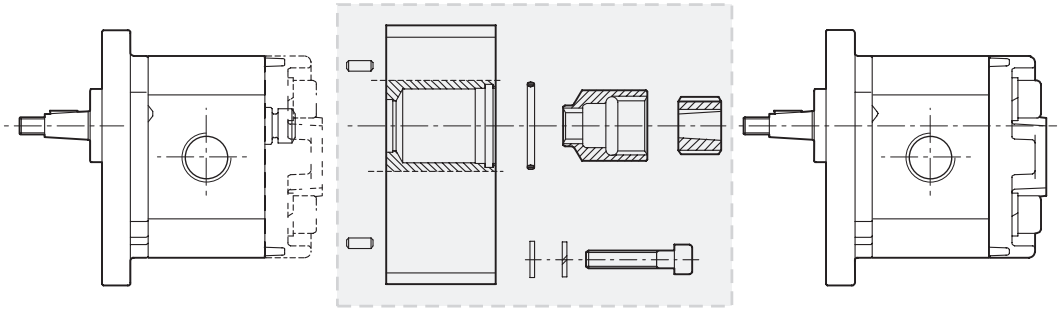

kit order code **010911000000000**

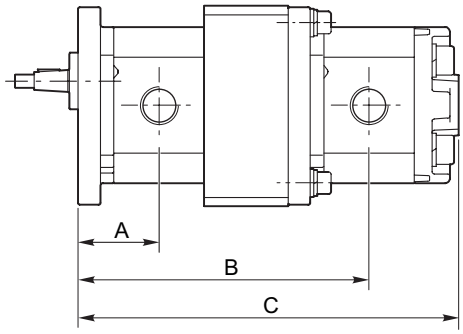

kit order code **010911000000000**

		mm *(inch)*		
		A	**B**	**C**
1SP A9.8 +	**A9.8**	52.2 *(2.053)*	177.9 *(7.006)*	234.1 *(9.217)*
	A7.8	52.2 *(2.053)*	174.0 *(6.850)*	226.2 *(8.906)*
	A6.3	52.2 *(2.053)*	171.2 *(6.738)*	220.5 *(8.681)*
	A5.0	52.2 *(2.053)*	168.6 *(6.638)*	215.4 *(8.480)*
	A4.2	52.2 *(2.053)*	167.1 *(6.577)*	212.3 *(8.358)*
	A3.7	52.2 *(2.053)*	166.1 *(6.539)*	210.4 *(8.283)*
	A3.2	52.2 *(2.053)*	165.1 *(6.500)*	208.4 *(8.205)*
	A2.5	52.2 *(2.053)*	163.8 *(6.447)*	205.7 *(8.098)*
	A2.0	52.2 *(2.053)*	162.8 *(6.407)*	203.7 *(8.020)*
	A1.6	52.2 *(2.053)*	162.0 *(6.378)*	202.2 *(7.961)*
	A1.2	52.2 *(2.053)*	161.2 *(6.344)*	200.5 *(7.894)*
	A0.9	52.2 *(2.053)*	160.6 *(6.323)*	199.4 *(7.850)*

kit order code **010911000000000**

		mm *(inch)*		
		A	**B**	**C**
1SP A7.8 +	**A7.8**	48.2 *(1.898)*	166.1 *(6.539)*	218.3 *(8.594)*
	A6.3	48.2 *(1.898)*	163.3 *(6.427)*	212.6 *(8.370)*
	A5.0	48.2 *(1.898)*	160.7 *(6.327)*	207.5 *(8.169)*
	A4.2	48.2 *(1.898)*	159.2 *(6.266)*	204.4 *(8.047)*
	A3.7	48.2 *(1.898)*	158.2 *(6.228)*	202.5 *(7.972)*
	A3.2	48.2 *(1.898)*	157.2 *(6.189)*	200.5 *(7.894)*
	A2.5	48.2 *(1.898)*	155.9 *(6.136)*	197.8 *(7.787)*
	A2.0	48.2 *(1.898)*	154.9 *(6.096)*	195.8 *(7.709)*
	A1.6	48.2 *(1.898)*	154.1 *(6.067)*	194.3 *(7.650)*
	A1.2	48.2 *(1.898)*	153.3 *(6.033)*	192.6 *(7.583)*
	A0.9	48.2 *(1.898)*	152.7 *(6.012)*	191.5 *(7.539)*

With SAE AA flange increase A, B, and C dimensions of 0.138 inch

SEE PAGE 301 FOR PRICES

kit order code 010911000000000

			mm (inch) A	B	C
1SP A6.3	+	A6.3	45.4 (1.785)	157.6 (6.203)	206.9 (8.146)
		A5.0	45.4 (1.785)	155.0 (6.102)	201.8 (7.945)
		A4.2	45.4 (1.785)	153.5 (6.041)	198.7 (7.823)
		A3.7	45.4 (1.785)	152.5 (6.004)	196.8 (7.748)
		A3.2	45.4 (1.785)	151.5 (5.965)	194.8 (7.669)
		A2.5	45.4 (1.785)	150.2 (5.911)	192.1 (7.563)
		A2.0	45.4 (1.785)	149.2 (5.872)	190.1 (7.484)
		A1.6	45.4 (1.785)	148.4 (5.843)	188.6 (7.425)
		A1.2	45.4 (1.785)	147.6 (5.809)	186.9 (7.358)
		A0.9	45.4 (1.785)	147.0 (5.787)	185.8 (7.315)
1SP A5.0	+	A5.0	42.8 (1.685)	149.9 (5.902)	196.7 (7.744)
		A4.2	42.8 (1.685)	148.4 (5.841)	193.6 (7.622)
		A3.7	42.8 (1.685)	147.4 (5.803)	191.7 (7.547)
		A3.2	42.8 (1.685)	146.4 (5.764)	189.7 (7.469)
		A2.5	42.8 (1.685)	145.1 (5.711)	187.0 (7.362)
		A2.0	42.8 (1.685)	144.1 (5.671)	185.0 (7.283)
		A1.6TC	42.8 (1.685)	143.3 (5.642)	183.5 (7.224)
		A1.2TC	42.8 (1.685)	142.5 (5.608)	181.8 (7.157)
		A0.9TC	42.8 (1.685)	141.9 (5.587)	180.7 (7.114)
1SP A4.2	+	A4.2TC	41.3 (1.624)	145.3 (5.719)	190.5 (7.500)
		A3.7TC	41.3 (1.624)	144.3 (5.681)	188.6 (7.425)
		A3.2TC	41.3 (1.624)	143.3 (5.642)	186.6 (7.346)
		A2.5TC	41.3 (1.624)	141.9 (5.589)	183.9 (7.240)
		A2.0TC	41.3 (1.624)	140.9 (5.549)	181.9 (7.161)
		A1.6TC	41.3 (1.624)	140.2 (5.520)	180.4 (7.102)
		A1.2TC	41.3 (1.624)	139.4 (5.486)	178.7 (7.035)
		A0.9TC	41.3 (1.624)	138.8 (5.465)	177.6 (6.992)

kit order code 010911000000000

			mm (inch) A	B	C
1SP A3.7	+	A3.7TC	40.3 (1.587)	142.4 (5.606)	186.7 (7.350)
		A3.2TC	40.3 (1.587)	141.4 (5.567)	184.7 (7.272)
		A2.5TC	40.3 (1.587)	140.1 (5.514)	182.0 (7.165)
		A2.0TC	40.3 (1.587)	139.1 (5.474)	180.0 (7.087)
		A1.6TC	40.3 (1.587)	138.3 (5.445)	178.5 (7.028)
		A1.2TC	40.3 (1.587)	137.5 (5.411)	176.8 (6.961)
		A0.9TC	40.3 (1.587)	136.9 (5.390)	175.7 (6.917)
1SP A3.2	+	A3.2TC	39.3 (1.547)	139.4 (5.488)	182.7 (7.193)
		A2.5TC	39.3 (1.547)	138.1 (5.435)	180.0 (7.087)
		A2.0TC	39.3 (1.547)	137.1 (5.396)	178.0 (7.008)
		A1.6TC	39.3 (1.547)	136.3 (5.366)	176.5 (6.949)
		A1.2TC	39.3 (1.547)	135.5 (5.333)	174.8 (6.882)
		A0.9TC	39.3 (1.547)	134.9 (5.311)	173.7 (6.839)
1SP A2.5	+	A2.5TC	37.9 (1.494)	135.4 (5.329)	177.3 (6.980)
		A2.0TC	37.9 (1.494)	134.4 (5.289)	175.3 (6.902)
		A1.6TC	37.9 (1.494)	133.6 (5.260)	173.8 (6.843)
		A1.2TC	37.9 (1.494)	132.8 (5.226)	172.1 (6.776)
		A0.9TC	37.9 (1.494)	132.2 (5.205)	171.0 (6.732)
1SP A2.0	+	A2.0TC	36.9 (1.455)	132.4 (5.211)	173.3 (6.823)
		A1.6TC	36.9 (1.455)	131.6 (5.181)	171.8 (6.764)
		A1.2TC	36.9 (1.455)	130.8 (5.148)	170.1 (6.697)
		A0.9TC	36.9 (1.455)	130.2 (5.126)	169.0 (6.654)
1SP A1.6	+	A1.6TC	36.2 (1.425)	130.1 (5.122)	170.3 (6.705)
		A1.2TC	36.2 (1.425)	129.3 (5.089)	168.6 (6.638)
		A0.9TC	36.2 (1.425)	128.7 (5.067)	167.5 (6.594)
1SP A1.2	+	A1.2TC	35.4 (1.392)	127.6 (5.022)	166.9 (6.571)
		A0.9TC	35.35 (1.392)	127.0 (5.000)	165.8 (6.528)
1SP A0.9	+	A0.9TC	34.8 (1.370)	125.9 (4.957)	164.7 (6.484)

SEE PAGE 301 FOR PRICES

50% OFF ALL PRICES

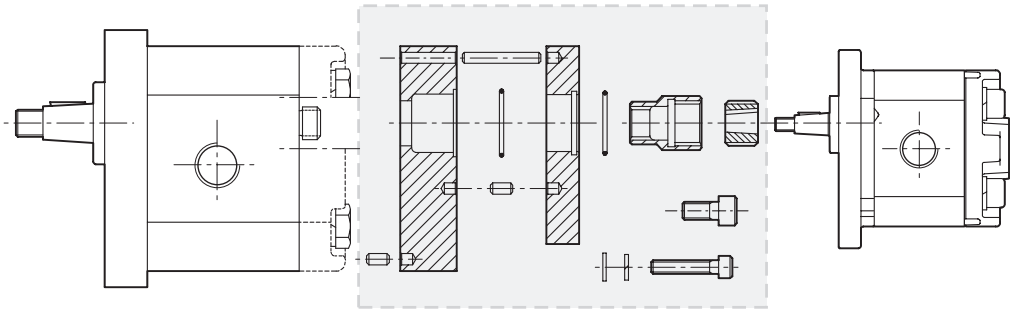

kit order code **010921100000000**

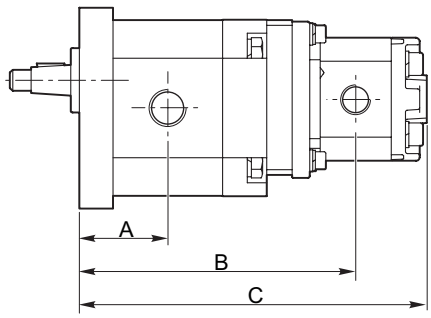

kit order code **010921100000000**

			mm *(inch)*		
			A	**B**	**C**
2SP...26	**+**	**1SPA**			
		9.8	62.7 *(2.469)*	198.1 *(7.797)*	254.2 *(10.008)*
		7.8	62.7 *(2.469)*	194.1 *(7.642)*	246.3 *(9.697)*
		6.3	62.7 *(2.469)*	191.3 *(7.530)*	240.6 *(9.472)*
		5	62.7 *(2.469)*	188.7 *(7.429)*	235.5 *(9.272)*
		4.2	62.7 *(2.469)*	187.2 *(7.368)*	232.4 *(9.150)*
		3.7	62.7 *(2.469)*	186.2 *(7.331)*	230.5 *(9.075)*
		3.2	62.7 *(2.469)*	185.2 *(7.291)*	228.5 *(8.996)*
		2.5	62.7 *(2.469)*	183.9 *(7.238)*	225.8 *(8.890)*
		2	62.7 *(2.469)*	182.9 *(7.199)*	223.8 *(8.811)*
		1.6	62.7 *(2.469)*	182.1 *(7.169)*	222.3 *(8.752)*
		1.2	62.7 *(2.469)*	181.3 *(7.136)*	220.6 *(8.685)*
		0.9	62.7 *(2.469)*	180.7 *(7.114)*	219.5 *(8.642)*

kit order code **010921100000000**

			mm *(inch)*		
			A	**B**	**C**
2SP...22	**+**	**1SPA**			
		9.8	59.8 *(2.354)*	192.3 *(7.569)*	248.4 *(9.780)*
		7.8	59.8 *(2.354)*	188.3 *(7.413)*	240.5 *(9.469)*
		6.3	59.8 *(2.354)*	185.5 *(7.301)*	234.8 *(9.244)*
		5	59.8 *(2.354)*	182.9 *(7.201)*	229.7 *(9.043)*
		4.2	59.8 *(2.354)*	181.4 *(7.140)*	226.6 *(8.921)*
		3.7	59.8 *(2.354)*	180.4 *(7.102)*	224.7 *(8.846)*
		3.2	59.8 *(2.354)*	179.4 *(7.063)*	222.7 *(8.768)*
		2.5	59.8 *(2.354)*	178.05 *(7.010)*	220.0 *(8.661)*
		2	59.8 *(2.354)*	177.1 *(6.970)*	218.0 *(8.583)*
		1.6	59.8 *(2.354)*	176.3 *(6.941)*	216.5 *(8.524)*
		1.2	59.8 *(2.354)*	175.5 *(6.907)*	214.8 *(8.457)*
		0.9	59.8 *(2.354)*	174.9 *(6.886)*	213.7 *(8.413)*

With B80C flange increase A, B, and C dimensions of 0.079 inch
With E52C flange decrease A, B, and C dimensions of 0.106 inch

SEE PAGE 301 FOR PRICES

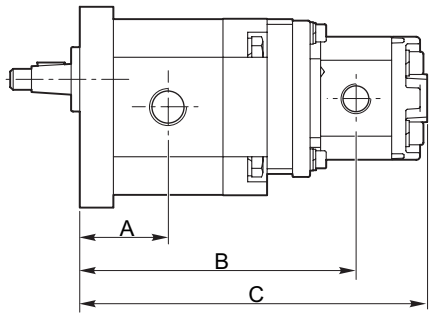

kit order code **010921100000000**

			mm *(inch)*		
			A	**B**	**C**
2SP...19	**+**	**1SPA**	9.8	57.3 *(2.256)*	187.3 *(7.372)*	243.4 *(9.583)*
			7.8	57.3 *(2.256)*	183.3 *(7.217)*	235.5 *(9.272)*
			6.3	57.3 *(2.256)*	180.5 *(7.104)*	229.8 *(9.047)*
			5	57.3 *(2.256)*	177.9 *(7.004)*	224.7 *(8.846)*
			4.2	57.3 *(2.256)*	176.4 *(6.943)*	221.6 *(8.724)*
			3.7	57.3 *(2.256)*	175.4 *(6.906)*	219.7 *(8.650)*
			3.2	57.3 *(2.256)*	174.4 *(6.866)*	217.7 *(8.571)*
			2.5	57.3 *(2.256)*	173.1 *(6.813)*	215.0 *(8.465)*
			2	57.3 *(2.256)*	172.1 *(6.774)*	213.0 *(8.386)*
			1.6	57.3 *(2.256)*	171.3 *(6.744)*	211.5 *(8.327)*
			1.2	57.3 *(2.256)*	170.5 *(6.711)*	209.8 *(8.260)*
			0.9	57.3 *(2.256)*	169.9 *(6.689)*	208.7 *(8.217)*
2SP...16	**+**	**1SPA**	9.8	54.8 *(2.157)*	182.3 *(7.175)*	238.4 *(9.386)*
			7.8	54.8 *(2.157)*	178.3 *(7.020)*	230.5 *(9.075)*
			6.3	54.8 *(2.157))*	175.5 *(6.907)*	224.8 *(8.850)*
			5	54.8 *(2.157*	172.9 *(6.807)*	219.7 *(8.650)*
			4.2	54.8 *(2.157)*	171.4 *(6.746)*	216.6 *(8.528)*
			3.7	54.8 *(2.157)*	170.4 *(6.709)*	214.7 *(8.453)*
			3.2	54.8 *(2.157)*	169.4 *(6.669)*	212.7 *(8.374)*
			2.5	54.8 *(2.157)*	168.1 *(6.616)*	210.0 *(8.268)*
			2	54.8 *(2.157)*	167.1 *(6.577)*	208.0 *(8.189)*
			1.6	54.8 *(2.157)*	166.3 *(6.547)*	206.5 *(8.130)*
			1.2	54.8 *(2.157)*	165.5 *(6.514)*	204.8 *(8.063)*
			0.9	54.8 *(2.157)*	164.9 *(6.492)*	203.7 *(8.020)*

kit order code **010921100000000**

			mm *(inch)*		
			A	**B**	**C**
2SP...14	**+**	**1SPA**	9.8	52.7 *(2.075)*	178.1 *(7.010)*	234.2 *(9.220)*
			7.8	52.7 *(2.075)*	174.1 *(6.854)*	226.3 *(8.909)*
			6.3	52.7 *(2.075)*	171.3 *(6.742)*	220.6 *(8.685)*
			5	52.7 *(2.075)*	168.7 *(6.642)*	215.5 *(8.484)*
			4.2	52.7 *(2.075)*	167.2 *(6.581)*	212.4 *(8.362)*
			3.7	52.7 *(2.075)*	166.2 *(6.543)*	210.5 *(8.287)*
			3.2	52.7 *(2.075)*	165.2 *(6.504)*	208.5 *(8.209)*
			2.5	52.7 *(2.075)*	163.9 *(6.451)*	205.8 *(8.102)*
			2	52.7 *(2.075)*	162.9 *(6.411)*	203.8 *(8.024)*
			1.6	52.7 *(2.075)*	162.1 *(6.382)*	202.3 *(7.965)*
			1.2	52.7 *(2.075)*	161.3 *(6.348)*	200.6 *(7.898)*
			0.9	52.7 *(2.075)*	160.7 *(6.327)*	199.5 *(7.854)*
2SP...11	**+**	**1SPA**	9.8	50.2 *(1.976)*	173.1 *(6.813)*	229.2 *(9.024)*
			7.8	50.2 *(1.976)*	169.1 *(6.657)*	221.3 *(8.713)*
			6.3	50.2 *(1.976)*	166.3 *(6.545)*	215.6 *(8.488)*
			5	50.2 *(1.976)*	163.7 *(6.445)*	210.5 *(8.287)*
			4.2	50.2 *(1.976)*	162.2 *(6.384)*	207.4 *(8.165)*
			3.7	50.2 *(1.976)*	161.2 *(6.346)*	205.5 *(8.091)*
			3.2	50.2 *(1.976)*	160.2 *(6.307)*	203.5 *(8.012)*
			2.5	50.2 *(1.976)*	158.9 *(6.254)*	200.8 *(7.906)*
			2	50.2 *(1.976)*	157.9 *(6.215)*	198.8 *(7.827)*
			1.6	50.2 *(1.976)*	157.1 *(6.185)*	197.3 *(7.768)*
			1.2	50.2 *(1.976)*	156.3 *(6.152)*	195.6 *(7.701)*
			0.9	50.2 *(1.976)*	155.7 *(6.130)*	194.5 *(7.657)*

SEE PAGE 301 FOR PRICES

50% OFF ALL PRICES

GROUP 2 + GROUP 1

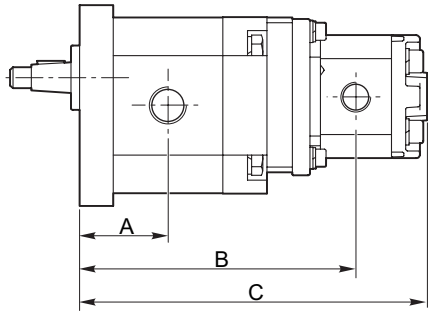

kit order code **010921100000000**

			mm *(inch)*		
			A	**B**	**C**
2SP...8	**+**	**1SPA**	9.8	48.2 *(1.896)*	168.9 *(6.652)*	225.1 *(8.862)*
			7.8	48.2 *(1.896)*	165.0 *(6.496)*	217.2 *(8.551)*
			6.3	48.2 *(1.896)*	162.2 *(6.384)*	211.5 *(8.327)*
			5	48.2 *(1.896)*	159.6 *(6.283)*	206.4 *(8.126)*
			4.2	48.2 *(1.896)*	158.1 *(6.222)*	203.3 *(8.004)*
			3.7	48.2 *(1.896)*	157.1 *(6.185)*	201.4 *(7.929)*
			3.2	48.2 *(1.896)*	156.1 *(6.146)*	199.4 *(7.850)*
			2.5	48.2 *(1.896)*	154.8 *(6.093)*	196.7 *(7.744)*
			2	48.2 *(1.896)*	153.8 *(6.053)*	194.7 *(7.665)*
			1.6	48.2 *(1.896)*	153.0 *(6.024)*	193.2 *(7.606)*
			1.2	48.2 *(1.896)*	152.2 *(5.990)*	191.5 *(7.539)*
			0.9	48.2 *(1.896)*	151.6 *(5.969)*	190.4 *(7.496)*
2SP...6	**+**	**1SPA**	9.8	46.1 *(1.813)*	164.8 *(6.486)*	220.9 *(8.697)*
			7.8	46.1 *(1.813)*	160.8 *(6.331)*	213.0 *(8.386)*
			6.3	46.1 *(1.813)*	157.9 *(6.219)*	207.3 *(8.161)*
			5	46.1 *(1.813)*	155.4 *(6.118)*	202.2 *(7.961)*
			4.2	46.1 *(1.813)*	153.9 *(6.057)*	199.1 *(7.839)*
			3.7	46.1 *(1.813)*	152.9 *(6.020)*	197.2 *(7.764)*
			3.2	46.1 *(1.813)*	151.9 *(5.980)*	195.2 *(7.685)*
			2.5	46.1 *(1.813)*	150.6 *(5.927)*	192.5 *(7.579)*
			2	46.1 *(1.813)*	149.6 *(5.888)*	190.5 *(7.500)*
			1.6	46.1 *(1.813)*	148.8 *(5.858)*	189.0 *(7.441)*
			1.2	46.1 *(1.813)*	147.9 *(5.825)*	187.3 *(7.374)*
			0.9	46.1 *(1.813)*	147.4 *(5.803)*	186.2 *(7.331)*

kit order code **010921100000000**

			mm *(inch)*		
			A	**B**	**C**
2SP...4	**+**	**1SPA**	9.8	44.4 *(1.748)*	168.9 *(6.652)*	217.6 *(8.567)*
			7.8	44.4 *(1.748)*	194.1 *(7.642)*	209.7 *(8.256)*
			6.3	44.4 *(1.748)*	191.3 *(7.530)*	204.0 *(8.032)*
			5	44.4 *(1.748)*	188.7 *(7.429)*	198.9 *(7.831)*
			4.2	44.4 *(1.748)*	187.2 *(7.368)*	195.8 *(7.709)*
			3.7	44.4 *(1.748)*	186.2 *(7.331)*	193.9 *(7.634)*
			3.2	44.4 *(1.748v*	185.2 *(7.291)*	191.9 *(7.555)*
			2.5	44.4 *(1.748)*	183.9 *(7.238)*	189.2 *(7.449)*
			2	44.4 *(1.748)*	182.9 *(7.199)*	187.2 *(7.370)*
			1.6	44.4 *(1.748)*	182.1 *(7.169)*	185.7 *(7.311)*
			1.2	44.4 *(1.748)*	181.3 *(7.136)*	184.0 *(7.244)*
			0.9	44.4 *(1.748)*	180.7 *(7.114)*	182.9 *(7.201)*

With B80C flange increase A, B, and C dimensions of 0.079 inch
With E52C flange decrease A, B, and C dimensions of 0.106 inch

SEE PAGE 301 FOR PRICES

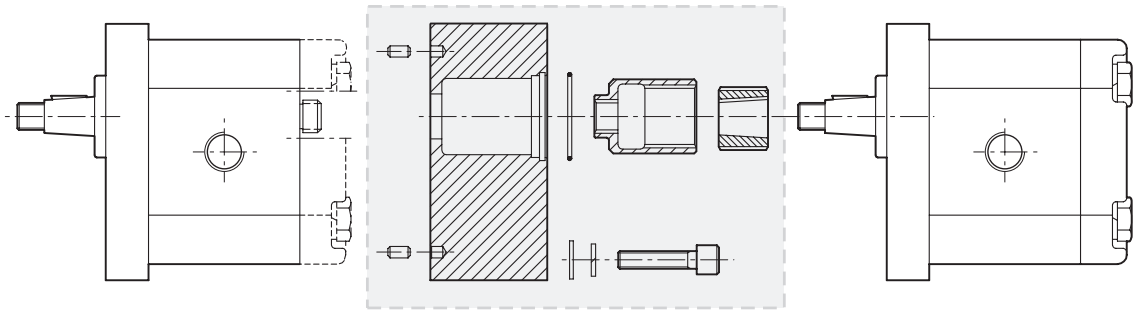

kit order code **010922000000000**

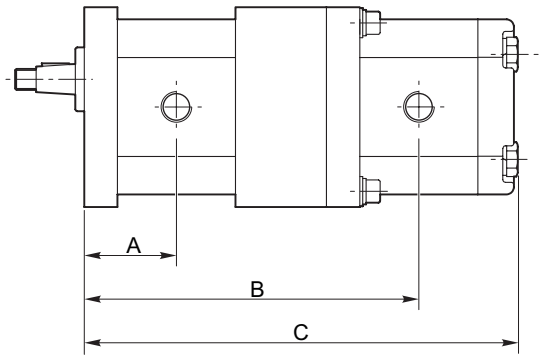

kit order code **010922000000000**

				mm *(inch)*		
				A	**B**	**C**
2SP ...4	**+**	**2SP ...**	**4**	44.4 *(1.748)*	166.2 *(6.543)*	214.8 *(8.457)*
2SP ...6	**+**	**2SP ...**	**6**	46.0 *(1.811)*	171.2 *(6.740)*	221.4 *(8.717)*
			4	46.0 *(1.811)*	169.5 *(6.673)*	218.1 *(8.587)*
2SP ...8	**+**	**2SP ...**	**8**	48.1 *(1.894)*	177.5 *(6.988)*	229.8 *(9.047)*
			6	48.1 *(1.894)*	175.4 *(6.906)*	225.6 *(8.882)*
			4	48.1 *(1.894)*	173.7 *(6.839)*	222.3 *(8.752)*

kit order code **010922000000000**

				mm *(inch)*		
				A	**B**	**C**
2SP ...11	**+**	**2SP ...**	**11**	50.2 *(1.976)*	183.6 *(7.228)*	238.0 *(9.370)*
			8	50.2 *(1.976)*	181.6 *(7.150)*	233.9 *(9.209)*
			6	50.2 *(1.976)*	179.5 *(7.067)*	229.7 *(9.043)*
			4	50.2 *(1.976)*	177.8 *(7.000)*	226.4 *(8.913)*
2SP ...14	**+**	**2SP ...**	**14**	52.7 *(2.075)*	191.1 *(7.524)*	248.0 *(9.764)*
			11	52.7 *(2.075)*	188.6 *(7.425)*	243.0 *(9.567)*
			8	52.7 *(2.075)*	186.6 *(7.346)*	238.9 *(9.406)*
			6	52.7 *(2.075)*	184.5 *(7.264)*	234.7 *(9.240)*
			4	52.7 *(2.075)*	182.8 *(7.197)*	231.4 *(9.110)*

SEE PAGE 301 FOR PRICES

50% OFF ALL PRICES

GROUP 2 + GROUP 2

kit order code	010922000000000			
		mm *(inch)*		
		A	B	C
2SP ...16 + 2SP ...	**16**	54.8 *(2.157)*	197.4 *(7.772)*	256.4 *(10.094)*
	14	54.8 *(2.157)*	195.3 *(7.689)*	252.2 *(9.929)*
	11	54.8 *(2.157)*	192.8 *(7.591)*	247.2 *(9.732)*
	8	54.8 *(2.157)*	190.8 *(7.512)*	243.1 *(9.571)*
	6	54.8 *(2.157)*	188.7 *(7.429)*	238.9 *(9.406)*
	4	54.8 *(2.157)*	187.0 *(7.362)*	235.6 *(9.276)*
2SP ...19 + 2SP ...	**19**	57.3 *(2.256)*	204.9 *(8.067)*	266.4 *(10.488)*
	16	57.3 *(2.256)*	202.4 *(7.969)*	261.4 *(10.291)*
	14	57.3 *(2.256)*	200.3 *(7.886)*	257.2 *(10.126)*
	11	57.3 *(2.256)*	197.8 *(7.787)*	252.2 *(9.929)*
	8	57.3 *(2.256)*	195.8 *(7.709)*	248.1 *(9.768)*
	6	57.3 *(2.256)*	193.7 *(7.626)*	243.9 *(9.602)*
	4	57.3 *(2.256)*	192.0 *(7.559)*	240.6 *(9.472)*
2SP ...22 + 2SP ...	**22**	59.8 *(2.354)*	212.4 *(8.362)*	276.4 *(10.882)*
	19	59.8 *(2.354)*	209.9 *(8.264)*	271.4 *(10.685)*
	16	59.8 *(2.354)*	207.4 *(8.165)*	266.4 *(10.488)*
	14	59.8 *(2.354)*	205.3 *(8.083)*	262.2 *(10.323)*
	11	59.8 *(2.354)*	202.8 *(7.984)*	257.2 *(10.126)*
	8	59.8 *(2.354)*	200.8 *(7.906)*	253.1 *(9.965)*
	6	59.8 *(2.354)*	198.7 *(7.823)*	248.9 *(9.799)*
	4	59.8 *(2.354)*	197.0 *(7.756)*	245.6 *(9.669)*

kit order code	010922000000000			
		mm *(inch)*		
		A	B	C
2SP ...26 + 2SP ...	**26**	62.7 *(2.469)*	221.1 *(8.705)*	288.0 *11.339)*
	22	62.7 *(2.469)*	218.2 *(8.591)*	282.2 *(11.110)*
	19	62.7 *(2.469)*	215.7 *(8.492)*	277.2 *(10.913)*
	16	62.7 *(2.469)*	213.2 *(8.394)*	272.2 *(10.717)*
	14	62.7 *(2.469)*	211.1 *(8.311)*	268.0 *(10.551)*
	11	62.7 *(2.469)*	208.6 *(8.213)*	263.0 *(10.354)*
	8	62.7 *2.469)*	206.6 *(8.134)*	258.9 *(10.193)*
	6	62.7 *(2.469)*	204.5 *(8.051)*	254.7 *(10.028)*
	4	62.7 *(2.469)*	202.8 *(7.984)*	251.4 *(9.898)*

SEE PAGE 301 FOR PRICES

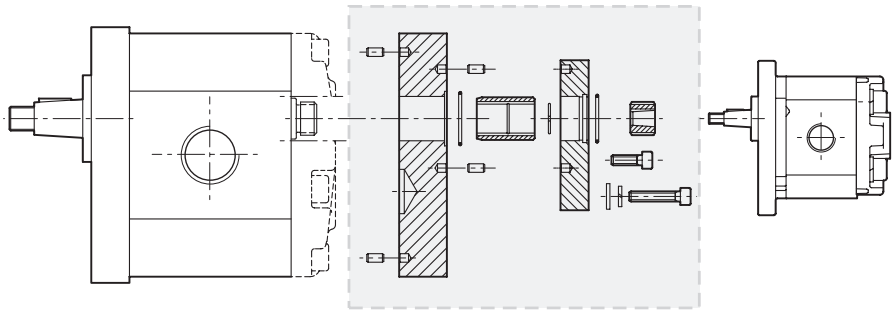

kit order code **010931100000000**

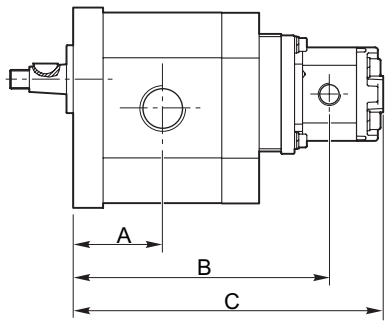

kit order code **010931100000000**

			mm *(inch)*		
			A	**B**	**C**
3SP...62	**+**	**1SPA**			
		9.8	80.4 *(3.163)*	234.9 *(9.250)*	291.1 *(11.461)*
		7.8	80.4 *(3.163)*	231.0 *(9.094)*	283.2 *(11.150)*
		6.3	80.4 *(3.163)*	228.2 *(8.982)*	277.5 *(10.925)*
		5	80.4 *(3.163)*	225.6 *(8.882)*	272.4 *(10.724)*
		4.2	80.4 *(3.163)*	224.1 *(8.821)*	269.3 *(10.602)*
		3.7	80.4 *(3.163)*	223.1 *(8.783)*	267.4 *(10.528)*
		3.2	80.4 *(3.163)*	222.1 *(8.744)*	265.4 *(10.449)*
		2.5	80.4 *(3.163)*	220.8 *(8.691)*	262.7 *(10.343)*
		2	80.4 *(3.163)*	219.8 *(8.652)*	260.7 *(10.264)*
		1.6	80.4 *(3.163)*	219.0 *(8.622)*	259.2 *(10.205)*
		1.2	80.4 *(3.163)*	218.2 *(8.589)*	257.5 *(10.138)*
		0.9	80.4 *(3.163)*	217.6 *(8.567)*	256.4 *(10.094)*

kit order code **010931100000000**

			mm *(inch)*		
			A	**B**	**C**
3SP...52	**+**	**1SPA**			
		9.8	76.4 *(3.006)*	226.9 *(8.935)*	283.1 *(11.146)*
		7.8	76.4 *(3.006)*	223.0 *(8.780)*	275.2 *(10.835)*
		6.3	76.4 *(3.006)*	220.2 *(8.667)*	269.5 *(10.610)*
		5	76.4 *(3.006)*	217.6 *(8.567)*	264.4 *(10.409)*
		4.2	76.4 *(3.006)*	216.1 *(8.506)*	261.3 *(10.287)*
		3.7	76.4 *(3.006)*	215.1 *(8.469)*	259.4 *(10.213)*
		3.2	76.4 *(3.006)*	214.1 *(8.429)*	257.4 *(10.134)*
		2.5	76.4 *(3.006)*	212.8 *(8.376)*	254.7 *(10.028)*
		2	76.4 *(3.006)*	211.8 *(8.337)*	252.7 *(9.949)*
		1.6	76.4 *(3.006)*	211.0 *(8.307)*	251.2 *(9.890)*
		1.2	76.4 *(3.006)*	210.2 *(8.274)*	249.5 *(9.823)*
		0.9	76.4 *(3.006)*	209.6 *(8.252)*	248.4 *(9.780)*

With SAE B flange increase A, B, and C dimensions of 0.118 inch

SEE PAGE 301 FOR PRICES

GROUP 3 + GROUP 1

kit order code **010931100000000**

				mm *(inch)*		
				A	B	C
3SP...44	+	1SPA	9.8	72.9 (2.868)	219.9 (8.659)	276.1 (10.870)
			7.8	72.9 (2.868)	216.0 (8.504)	268.2 (10.559)
			6.3	72.9 (2.868)	213.2 (8.392)	262.5 (10.335)
			5	72.9 (2.868)	210.6 (8.291)	257.4 (10.134)
			4.2	72.9 (2.868)	209.1 (8.230)	254.3 (10.012)
			3.7	72.9 (2.868)	208.1 (8.193)	252.4 (9.937))
			3.2	72.9 (2.868)	207.1 (8.154)	250.4 (9.858
			2.5	72.9 (2.868)	205.8 (8.100)	247.7 (9.752)
			2	72.9 (2.868)	204.8 (8.061)	245.7 (9.673)
			1.6	72.9 (2.868)	204.0 (8.032)	244.2 (9.614)
			1.2	72.9 (2.868)	203.2 (7.998)	242.5 (9.547)
			0.9	72.9 (2.868)	202.6 (7.976)	241.4 (9.504)
3SP...36	+	1SPA	9.8	69.9 (2.750)	213.9 (8.423)	270.1 (10.634)
			7.8	68.4 (2.691)	210.0 (8.268)	262.2 (10.323)
			6.3	69.9 (2.750)	207.2 (8.156)	256.5 (10.098)
			5	69.9 (2.750)	204.6 (8.055)	251.4 (9.898)
			4.2	69.9 (2.750)	203.1 (7.994)	248.3 (9.776)
			3.7	69.9 (2.750)	202.1 (7.957)	246.4 (9.701)
			3.2	69.9 (2.750)	201.1 (7.917)	244.4 (9.622)
			2.5	69.9 (2.750)	199.8 (7.864)	241.7 (9.516)
			2	69.9 (2.750)	198.8 (7.825)	239.7 (9.437)
			1.6	69.9 (2.750)	198.0 (7.795)	238.2 (9.378)
			1.2	69.9 (2.750)	197.2 (7.762)	236.5 (9.311)
			0.9	69.9 (2.750)	196.60 (7.740)	235.4 (9.268)
3SP...33	+	1SPA	9.8	68.4 (2.691)	210.9 (8.305)	267.1 (10.516)
			7.8	68.4 (2.691)	207.0 (8.150)	259.2 (10.205)
			6.3	68.4 (2.691)	204.2 (8.037)	253.5 (9.980)
			5	68.4 (2.691)	201.6 (7.937)	248.4 (9.780)
			4.2	68.4 (2.691)	200.4 (7.876)	245.3 (9.657)
			3.7	68.4 (2.691)	199.1 (7.839)	243.4 (9.583)
			3.2	68.4 (2.691)	198.1 (7.799)	241.4 (9.504)
			2.5	68.4 (2.691)	196.8 (7.746)	238.7 (9.398)
			2	68.4 (2.691)	195.8 (7.707)	236.7 (9.319)
			1.6	68.4 (2.691)	195.0 (7.677)	235.2 (9.260)
			1.2	68.4 (2.691)	194.2 (7.644)	233.5 (9.193)
			0.9	68.4 (2.691)	193.6 (7.622)	232.4 (9.150)

kit order code **010931100000000**

				mm *(inch)*		
				A	B	C
3SP...29	+	1SPA	9.8	66.9 (2.632)	207.9 (8.187)	264.1 (10.398)
			7.8	66.9 (2.632)	204.0 (8.032)	256.2 (10.087)
			6.3	66.9 (2.632)	201.2 (7.919)	250.5 (9.862)
			5	66.9 (2.632)	198.6 (7.819)	245.4 (9.661)
			4.2	66.9 (2.632)	197.1 (7.758)	242.3 (9.539)
			3.7	66.9 (2.632)	196.1 (7.720)	240.4 (9.465)
			3.2	66.9 (2.632)	195.1 (7.681)	238.4 (9.386)
			2.5	66.9 (2.632)	193.8 (7.628)	235.7 (9.280)
			2	66.9 (2.632)	192.8 (7.589)	233.7 (9.201)
			1.6	66.9 (2.632)	192.0 (7.559)	232.2 (9.142)
			1.2	66.9 (2.632)	191.2 (7.526)	230.5 (9.075)
			0.9	66.9 (2.632)	190.6 (7.504)	229.4 (9.032)
3SP...22	+	1SPA	9.8	63.9 (2.514)	201.9 (7.951)	258.1 (10.161)
			7.8	63.9 (2.514)	198.0 (7.795)	250.2 (9.850)
			6.3	63.9 (2.514)	195.2 (7.683)	244.5 (9.626)
			5	63.9 (2.514)	192.6 (7.583)	239.4 (9.425)
			4.2	63.9 (2.514)	191.1 (7.522)	236.3 (9.303)
			3.7	63.9 (2.514)	190.1 (7.484)	234.4 (9.228)
			3.2	63.9 (2.514)	189.1 (7.445)	232.4 (9.150)
			2.5	63.9 (2.514)	187.8 (7.392)	229.7 (9.043)
			2	63.9 (2.514)	186.8 (7.352)	227.7 (8.965)
			1.6	63.9 (2.514)	186.0 (7.323	226.2 (8.906)
			1.2	63.9 (2.514)	185.2 (7.289)	224.5 (8.839)
			0.9	63.9 (2.514)	184.6 (7.268)	223.4 (8.795)
3SP...19	+	1SPA	9.8	62.4 (2.455)	198.9 (7.833)	255.1 (10.043)
			7.8	62.4 (2.455)	195.0 (7.677)	247.2 (9.732)
			6.3	62.4 (2.455)	192.2 (7.565)	241.5 (9.508)
			5	62.4 (2.455)	189.6 (7.465)	236.4 (9.307)
			4.2	62.4 (2.455)	188.1 (7.404)	233.3 (9.185)
			3.7	62.4 (2.455)	187.1 (7.366)	231.4 (9.110)
			3.2	62.4 (2.455)	186.1 (7.327)	229.4 (9.032)
			2.5	62.4 (2.455)	184.8 (7.274)	226.7 (8.925)
			2	62.4 (2.455)	183.8 (7.234)	224.7 (8.846)
			1.6	62.4 (2.455)	183.0 (7.205)	223.2 (8.787)
			1.2	62.4 (2.455)	182.2 (7.171)	221.5 (8.720)
			0.9	62.4 (2.455)	181.6 (7.150)	220.4 (8.677)

SEE PAGE 301 FOR PRICES

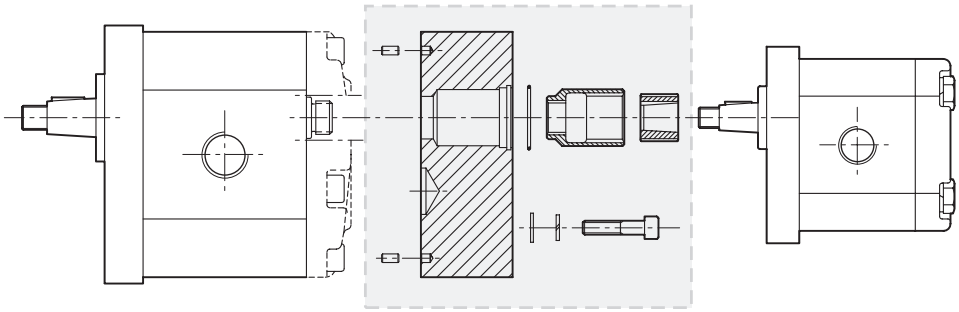

kit order code **010932000000000**

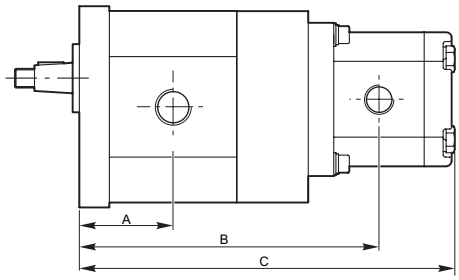

kit order code **010932000000000**

			mm *(inch)*		
			A	**B**	**C**
3SP ...62	**+**	**2SP**			
		26	80.4 *(3.165)*	257.0 *(10.118)*	323.9 *(12.752)*
		22	80.4 *(3.165)*	254.1 *(10.004)*	318.1 *(12.524)*
		19	80.4 *(3.165)*	251.6 *(9.906*	313.1 *(12.327)*
		16	80.4 *(3.165)*	249.1 *(9.807*	308.1 *(12.130)*
		14	80.4 *(3.165)*	247.0 *(9.724)*	303.9 *(11.965)*
		11	80.4 *(3.165)*	244.5 *(9.626)*	298.9 *(11.768)*
		8	80.4 *(3.165)*	242.4 *(9.543)*	294.8 *11.606)*
		6	80.4 *(3.165)*	240.3 *(9.461)*	290.6 *(11.441)*
		4	80.4 *(3.165)*	238.7 *(9.398)*	287.3 *(11.311)*

kit order code **010932000000000**

			mm *(inch)*		
			A	**B**	**C**
3SP ...52	**+**	**2SP**			
		26	76.4 *(3.008)*	249.0 *(9.803)*	315.9 *12.437)*
		22	76.4 *(3.008)*	246.1 *(9.689)*	310.1 *((12.209)*
		19	76.4 *(3.008)*	243.6 *(9.591)*	305.1 *(12.012)*
		16	76.4 *(3.008)*	241.1 *(9.492)*	300.1 *(11.815)*
		14	76.4 *(3.008)*	239.0 *(9.409)*	295.9 *(11.650)*
		11	76.4 *(3.008)*	236.5 *(9.311)*	290.9 *(11.453)*
		8	76.4 *(3.008)*	234.4 *(9.228)*	286.8 *(11.291)*
		6	76.4 *((3.008)*	232.3 *(9.146)*	282.6 *(11.126)*
		4	76.4 *3.008)*	230.7 *((9.083)*	279.3 *(10.996)*

SEE PAGE 301 FOR PRICES

GROUP 3 + GROUP 2

kit order code **010932000000000**

			mm *(inch)* A	B	C
3SP ...44 + 2SP		26	72.9 (2.870)	242.0 9.528)	308.9 (12.161)
		22	72.9 (2.870)	239.1 (9.413)	303.1 (11.933)
		19	72.9 (2.870)	236.6 (9.315)	298.1 (11.736)
		16	72.9 (2.870)	234.1 (9.217)	293.1 (11.539)
		14	72.9 (2.870)	232.0 (9.134)	288.9 (11.374)
		11	72.9 (2.870)	229.5 (9.035)	283.9 (11.177)
		8	72.9 2.870)	227.4 (8.953)	279.8 (11.016)
		6	72.9 ((2.870)	225.3 (8.870)	275.6 (10.850)
		4	72.9 (2.870)	223.7 (8.807)	272.3 (10.720)
3SP ...36 + 2SP		26	69.9 (2.752)	236.0 (9.291)	302.9 (11.925)
		22	69.9 (2.752)	233.1 (9.177)	297.1 (11.697)
		19	69.9 (2.752)	230.6 (9.079)	292.1 (11.500)
		16	69.9 (2.752)	228.1 (8.980)	287.1 (11.303)
		14	69.9 (2.752)	226.0 (8.898)	282.9 (11.138)
		11	69.9 (2.752)	223.5 (8.799)	277.9 (10.941)
		8	69.9 (2.752)	221.4 (8.717)	273.8 (10.780)
		6	69.9 (2.752)	219.3 (8.634)	269.6 (10.614)
		4	69.9 (2.752)	217.7 (8.571)	266.3 (10.484)
3SP ...33 + 2SP		26	68.4 (2.693)	232.0 (9.134)	299.9 (11.807)
		22	68.4 (2.693)	230.1 (9.059)	294.1 (11.579)
		19	68.4 (2.693)	227.6 (8.961)	289.1 (11.382)
		16	68.4 (2.693)	225.1 (8.862)	284.1 (11.185)
		14	68.4 ((2.693)	223.0 (8.780)	279.9 (11.020)
		11	68.4 2.693)	220.5 (8.681)	274.9 (10.823)
		8	68.4 (2.693)	218.4 (8.598)	270.8 (10.661)
		6	68.4 (2.693)	216.3 (8.516)	266.6 (10.496)
		4	68.4 (2.693)	214.7 (8.453)	263.3 (10.366)

kit order code **010932000000000**

			mm *(inch)* A	B	C
3SP ...29 + 2SP		26	66.9 (2.634)	230.0 (9.055)	296.9 (11.689)
		22	66.9 (2.634)	227.1 (8.941)	291.1 (11.461)
		19	66.9 (2.634)	224.6 (8.843)	286.1 (11.264)
		16	66.9 (2.634)	222.1 (8.744)	281.1 (11.067)
		14	66.9 (2.634)	220.0 ((8.661)	276.9 (10.902)
		11	66.9 (2.634)	217.5 8.563)	271.9 (10.705)
		8	66.9 (2.634)	215.4 (8.480)	267.8 (10.543)
		6	66.9 (2.634)	213.3 (8.398)	263.6 (10.378)
		4	66.9 (2.634)	201.7 (7.941)	260.3 (10.248)
3SP ...22 + 2SP		26	63.9 (2.516)	224.0 (8.819)	290.9 (11.453)
		22	63.9 (2.516)	221.1 (8.705)	285.1 (11.224)
		19	63.9 (2.516)	218.6 (8.606)	280.1 (11.028)
		16	63.9 (2.516)	116.1 (4.571)	275.1 (10.831)
		14	63.9 (2.516)	214.0 (8.425)	270.9 (10.665)
		11	63.9 (2.516)	211.5 (8.327)	265.9 (10.469)
		8	63.9 (2.516))	209.4 (8.244)	261.8 (10.307)
		6	63.9 (2.516	207.3 (8.161)	257.6 (10.142)
		4	63.9 (2.516)	305.7 (12.035)	254.3 (10.012)
3SP ...19 + 2SP		26	62.4 (2.457)	221.0 (8.701)	287.9 (11.335)
		22	62.4 (2.457)	218.1 (8.587)	282.1 (11.106)
		19	62.4 (2.457)	215.6 (8.488)	277.1 (10.909)
		16	62.4 (2.457)	213.1 (8.390)	272.1 (10.713)
		14	62.4 (2.457)	211.0 (8.307)	267.9 (10.547)
		11	62.4 (2.457)	208.5 (8.209)	262.9 (10.350)
		8	62.4 (2.457)	306.4 (12.063)	258.8 (10.189)
		6	62.4 (2.457)	204.3 (8.043)	254.6 (10.024)
		4	62.4 (2.457)	202.7 (7.980)	251.3 (9.894)

SEE PAGE 301 FOR PRICES

GROUP 3 + GROUP 3

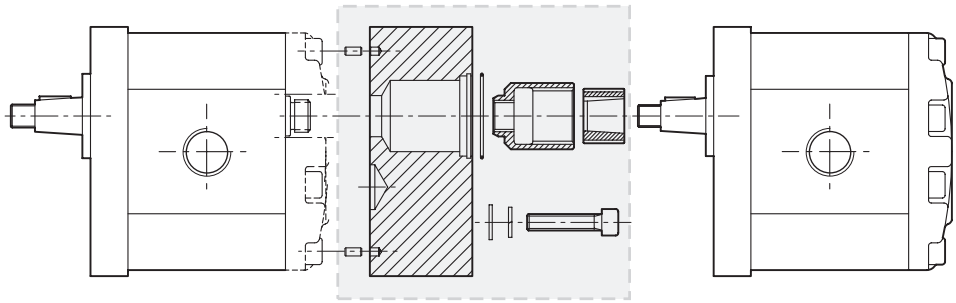

kit order code **010933000000000**

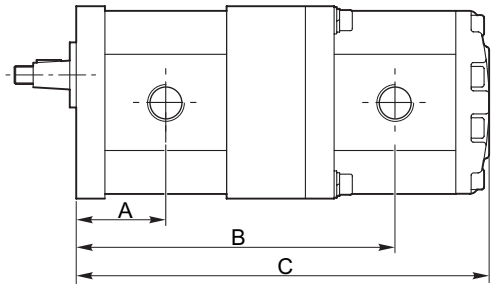

kit order code **010933000000000**

mm *(inch)*

		A	B	C
3SP 62 + 3 SP ..	**62**	80.4 *(3.165)*	283.7 *(11.169)*	367.6 *(14.472)*
	52	80.4 *(3.165)*	279.7 *(11.012)*	359.6 *(14.157)*
	44	80.4 *(3.165)*	276.2 *(10.874)*	352.6 *(13.882)*
	36	80.4 *(3.165)*	273.2 *(10.756)*	346.6 *(13.646)*
	33	80.4 *(3.165)*	272.7 *(10.736)*	343.6 *(13.528)*
	29	80.4 *(3.165)*	270.2 *(10.638)*	340.6 *(13.409)*
	22	80.4 *(3.165)*	267.2 *(10.520)*	334.6 *(13.173)*
	19	80.4 *(3.165)*	265.7 *(10.461)*	331.6 *(13.055)*
3SP 52 + 3 SP ..	**52**	76.4 *(3.008)*	271.7 *(10.697)*	351.6 *(13.843)*
	44	76.4 *(3.008)*	268.2 *(10.559)*	344.6 *(13.567)*
	36	76.4 *(3.008)*	265.2 *(10.441)*	338.6 *(13.331)*
	33	76.4 *(3.008)*	263.7 *(10.382)*	335.6 *(13.213)*
	29	76.4 *(3.008)*	262.2 *(10.323)*	332.6 *(13.094)*
	22	76.4 *(3.008)*	259.2 *(10.205)*	326.6 *(12.858)*
	19	76.4 *(3.008)*	257.7 *(10.146)*	323.6 *(12.740)*
3SP 44 + 3 SP ..	**44**	72.9 *(2.870)*	261.2 *(10.283)*	337.6 *(13.291)*
	36	72.9 *(2.870)*	258.2 *(10.165)*	331.6 *(13.055)*
	33	72.9 *(2.870)*	256.7 *(10.106)*	328.6 *(12.937)*
	29	72.9 *(2.870)*	255.2 *(10.047)*	325.6 *(12.819)*
	22	72.9 *(2.870)*	252.2 *(9.929)*	319.6 *(12.583)*
	19	72.9 *(2.870)*	250.7 *(9.870)*	316.6 *(12.465)*

kit order code **010933000000000**

mm *(inch)*

		A	B	C
3SP 36 + 3 SP ..	**36**	69.9 *(2.752)*	252.2 *(9.929)*	325.6 *(12.819)*
	33	69.9 *(2.752)*	250.7 *(9.870)*	322.6 *(12.701)*
	29	69.9 *(2.752)*	249.2 *(9.811)*	319.6 *(12.583)*
	22	69.9 *(2.752)*	246.2 *(9.693)*	313.6 *(12.346)*
	19	69.9 *(2.752)*	244.7 *(9.634)*	310.6 *(12.228)*
3SP 33 + 3 SP ..	**33**	68.4 *(2.693)*	247.7 *(9.752)*	319.6 *(12.583)*
	29	68.4 *(2.693)*	246.2 *(9.693)*	316.6 *(12.465)*
	22	68.4 *(2.693)*	243.2 *(9.575)*	310.6 *(12.228)*
	19	68.4 *(2.693)*	241.7 *(9.516)*	307.6 *(12.110)*
3SP 29 + 3 SP ..	**29**	66.9 *(2.634)*	243.2 *(9.575)*	313.6 *(12.346)*
	22	66.9 *(2.634)*	240.2 *(9.457)*	307.6 *(12.110)*
	19	66.9 *(2.634)*	238.7 *(9.398)*	304.6 *(11.992)*
3SP 22 + 3 SP ..	**22**	63.9 *(2.516)*	234.2 *(9.220)*	301.6 *(11.874)*
	19	63.9 *(2.516)*	232.7 *(9.161)*	298.6 *(11.756)*
3SP 19 + 3 SP ..	**19**	62.4 *(2.457)*	229.7 *(9.043)*	295.6

SEE PAGE 301 FOR PRICES

GROUP 1 GEAR PUMPS + GEAR MOTORS PRICE LIST

DESCRIPTION	4 BOLT FLANGE STANDARD	FLANGE MINI-POWERPACK	FLANGE E32C FLANGE E32B	2 BOLT FLANGE SAE AA
PUMP 1SPA 0,9	£164.97	£164.97	£173.20	£173.20
PUMP 1SPA 1,2	£164.97	£164.97	£173.20	£173.20
PUMP 1SPA 1,6	£164.97	£164.97	£173.20	£173.20
PUMP 1SPA 2,0	£164.97	£164.97	£173.20	£173.20
PUMP 1SPA 2,5	£168.58	£168.83	£177.26	£177.26
PUMP 1SPA 3,2	£168.58	£168.83	£177.26	£177.26
PUMP 1SPA 3,7	£168.58	£168.83	£177.26	£177.26
PUMP 1SPA 4,2	£168.58	£168.83	£177.26	£177.26
PUMP 1SPA 5,0	£173.44	£173.44	£182.11	£182.11
PUMP 1SPA 6,3	£173.44	£173.44	£182.11	£182.11
PUMP 1SPA 7,8	£177.50	£178.64	£187.57	£187.57
PUMP 1SPA 9,8	£184.98	£184.54	£193.44	£193.21

ADD-ON EXTRAS (NOT SPARES PRICES)	
SEAL FOR HIGHT PRESSURE (K)	£5.78
STND and SAE AA PUMP with OR	£5.66
SHAFT SEAL (EB32C)	£6.08
SHAFT SEAL (H)	£7.32
VITON SEAL	£30.07
END-COVER with MAIN RELIEF VALVE INTERNAL EXHAUST	£65.78

ADDITIONAL PRICES FOR PRICING UP TANEM PUMPS. GROUP 1 BASED	
KIT MULTIPLE PUMP 1P + 1P Standard	£78.62
DISJUNCTOR VALVE ON INTERMEDIATE FLANGE	£212.06
COMMON SUCTION (1st 2nd and 3rd pump)	additional price by 5% on multiple pump

GROUP 2 GEAR PUMPS + GEAR MOTORS PRICE LIST

FOR TRIPLE AND QUADRUPLE KEEP ADDING 'KIT MULTIPLE PUMP'
• TANDEM = 1 KIT • TRIPLE = 2 KITS
• QUADRUPLE = 3 KITS

DESCRIPTION	4 BOLT ALUMINIUM FLANGE STANDARD	ALUMINIUM FLANGE B50-B80-E52-M52-SAEA	ALUMINIUM FLANGE PRKS	4 BOLT CAST-IRON FLANGE STANDARD	2 BOLT CAST-IRON FLANGE SAE A
PUMP 2 SP 4	£204.28	£214.30	£247.75	£231.27	£241.27
PUMP 2 SP 6	£204.28	£214.30	£247.75	£231.27	£241.27
PUMP 2 SP 8	£204.28	£214.30	£247.75	£231.27	£241.27
PUMP 2 SP 11	£210.45	£214.30	£253.91	£238.19	£248.22
PUMP 2 SP 14	£210.45	£214.30	£253.91	£238.19	£248.22
PUMP 2 SP 16	£210.45	£214.30	£253.91	£238.19	£248.22
PUMP 2 SP 19	£217.38	£228.18	£260.87	£244.37	£255.16
PUMP 2 SP 22	£217.38	£228.18	£260.87	£244.37	£255.16
PUMP 2 SP 26	£212.17	£233.56	£266.25	£249.75	£260.55

ADD-ON EXTRAS (NOT SPARES PRICES)	
SUPPORT INCORPORATED IN THE FLANGE	£96.34
SUPPORT Ø 50,8 - shaft Ø 22	£106.51
FLANGE WITH BEARING (for B50C and B80C)	£35.46
FLANGE WITH O-Ring	£8.47
SHAFT SEAL (H)	£10.02
SEAL FOR HIGH PRESSURE (K) - 30 bar	£5.78
SEAL FOR HIGH PRESSURE (KK) - 100 bar	£11.60
SHAFT SEAL (MC52CX)	£6.73
SPECIAL KEY draw.25053	£5.97
VITON SEAL	£30.07
END-COVER with MAIN RELIEF VALVE INTERNAL EXHAUST	£70.14
END-COVER with MAIN RELIEF VALVE EXTERNAL EXHAUST	£74.78

ADD-ON EXTRAS (NOT SPARES PRICES)	
UNIDIRECTIONAL MOTOR (CLOCKWISE OR ANTICLOCKWISE MOTOR)	£10.02
BIDIRECTIONAL PUMP AND MOTOR (REVERSIBLE MOTOR)	£49.33
END COVER TWO SPEED (ON UNID. MOTOR)	£322.99
ANTICAVITATION VALVE VA MOTORE	£89.04
SPECIAL COVER WITH PRIORITY VALVE - VRF	£180.98
SPECIAL COVER WITH PRIORITY VALVE AND PRESSURE VALVE - VRF+VLP	£214.13

ADDITIONAL PRICES FOR PRICING UP TAMDEM PUMPS. GROUP 2 BASED		
KIT MULTIPLE PUMP	GR.2SP + GR.1	£90.20
KIT MULTIPLE PUMP	GR.2SP + GR.2SP	£90.20
Common suction (1st 2nd and 3rd pump)	additional price by 5% on multiple pump	

GROUP 3 GEAR PUMPS + GEAR MOTORS PRICE LIST

FOR TRIPLE AND QUADRUPLE KEEP ADDING 'KIT MULTIPLE PUMP'
• TANDEM = 1 KIT • TRIPLE = 2 KITS
• QUADRUPLE = 3 KITS

DESCRIPTION	4 BOLT ALUMINIUM FLANGE STANDARD	2 BOLT ALUMINIUM FLANGE SAE B	4 BOLT CAST-IRON FLANGE	2 BOLT CAST-IRON FLANGE SAE B
PUMP 3 SP 19	£392.37	£413.18	£439.39	£466.70
PUMP 3 SP 22	£392.37	£413.18	£439.39	£466.70
PUMP 3 SP 29	£404.70	£425.53	£451.73	£479.00
PUMP 3 SP 33	£404.70	£425.53	£451.73	£479.00
PUMP 3 SP 36	£404.70	£425.53	£451.73	£479.00
PUMP 3 SP 44	£417.04	£437.86	£464.06	£492.88
PUMP 3 SP 52	£417.04	£437.86	£464.06	£492.88
PUMP 3 SP 62	£437.86	£458.66	£484.88	£514.44

ADD-ON EXTRAS (NOT SPARES PRICES)	
FLANGE WITH O-Ring	£12.71
SHAFT SEAL (H)	£10.02
SEAL FOR HIGHT PRESSURE (K)	£5.78
VITON SEAL	£31.60
UNIDIRECTIONAL MOTOR	£49.75
BIDIRECTIONAL MOTOR	£107.14
SUPPORT ZFC	£183.43
END-COVER WITH MAIN RELIEF VALVE	£93.28

ADDITIONAL PRICES FOR PRICING UP TAMDEM PUMPS. GROUP 3 BASED		
KIT MULTIPLE PUMP	GR.3SP + GR.1SP	£131.80
KIT MULTIPLE PUMP	GR.3SP + GR.2SP	£140.31
KIT MULTIPLE PUMP	GR.3SP + GR.3SP	£148.78

FOR TRIPLE AND QUADRUPLE KEEP ADDING 'KIT MULTIPLE PUMP'
• TANDEM = 1 KIT • TRIPLE = 2 KITS
• QUADRUPLE = 3 KITS

PUMPS AND MOTORS ELBOW CONNECTORS

ELBOW CONNECTORS FOR PUMP PORT CONNECTIONS TYPE 'T'.....303
ELBOW CONNECTORS FOR PUMP PORT CONNECTIONS TYPE 'N'.....303

Galtech s.p.a
OLEODINAMICA
Gruppo Gallinari

50% OFF ALL PRICES

ELBOW CONNECTORS FOR PUMP PORT CONNECTIONS TYPE 'T'

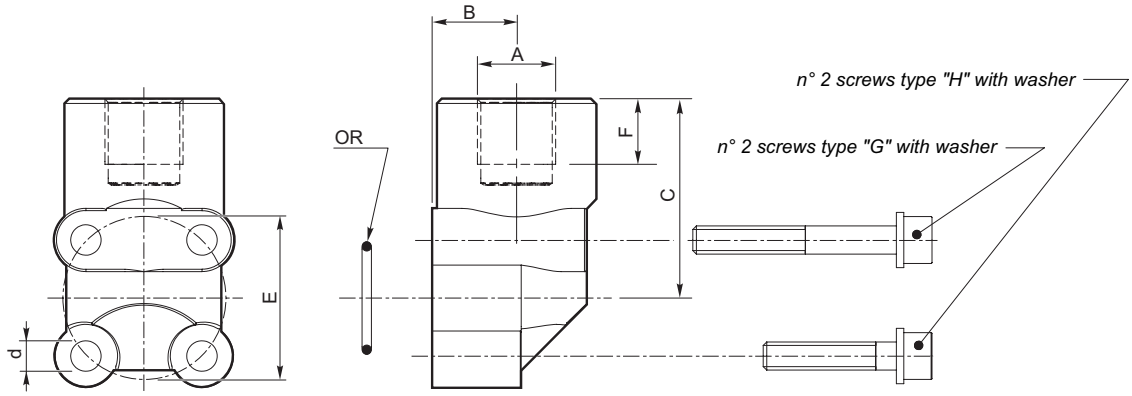

STEEL

Type	A	B	C	d	E	F	OR	Screws type "H"	Screws type "G"	List Price £
FG381BKA	3/8" BSP	18 *(0.709)*	40 *(1.575)*	6.5 *(0.256)*	35 *(1.378)*	16 *(0.630)*	18.72 x 2.62	M6x20 UNI 5931	M6x35 UNI 5931	£23.13
FG121BKA	1/2" BSP	18 *(0.709)*	40 *(1.575)*	6.5 *(0.256)*	35 *(1.378)*	16 *(0.630)*	18.72 x 2.62	M6x20 UNI 5931	M6x35 UNI 5931	£23.13
FG122BKA	1/2" BSP	24 *(0.945)*	41.5 *(1.634)*	6.5 *(0.256)*	40 *(1.575)*	16 *(0.630)*	23.81 x 2.62	M6x20 UNI 5931	M6x45 UNI 5931	£28.51
FG342BKA	3/4" BSP	24 *(0.945)*	41.5 *(1.634)*	6.5 *(0.256)*	40 *(1.575)*	16 *(0.630)*	23.81 x 2.62	M6x20 UNI 5931	M6x45 UNI 5931	£28.51

ALUMINIUM

Type	A	B	C	d	E	F	OR	Screws type "H"	Screws type "G"	List Price £
FG381BKAL	3/8" BSP	18 *(0.709)*	40 *(1.575)*	6.5 *(0.256)*	35 *(1.378)*	16 *(0.630)*	18.72 x 2.62	M6x30 UNI 5931	M6x45 UNI 5931	£16.94
FG121BKAL	1/2" BSP	18 *(0.709)*	40 *(1.575)*	6.5 *(0.256)*	35 *(1.378)*	16 *(0.630)*	18.72 x 2.62	M6x30 UNI 5931	M6x45 UNI 5931	£16.94
FG122BKAL	1/2" BSP	24 *(0.945)*	41.5 *(1.634)*	6.5 *(0.256)*	40 *(1.575)*	16 *(0.630)*	23.81 x 2.62	M6x35 UNI 5931	M6x55 UNI 5931	£25.44
FG342BKAL	3/4" BSP	24 *(0.945)*	41.5 *(1.634)*	6.5 *(0.256)*	40 *(1.575)*	16 *(0.630)*	23.81 x 2.62	M6x35 UNI 5931	M6x55 UNI 5931	£25.44

ELBOW CONNECTORS FOR PUMP PORT CONNECTIONS TYPE 'N'

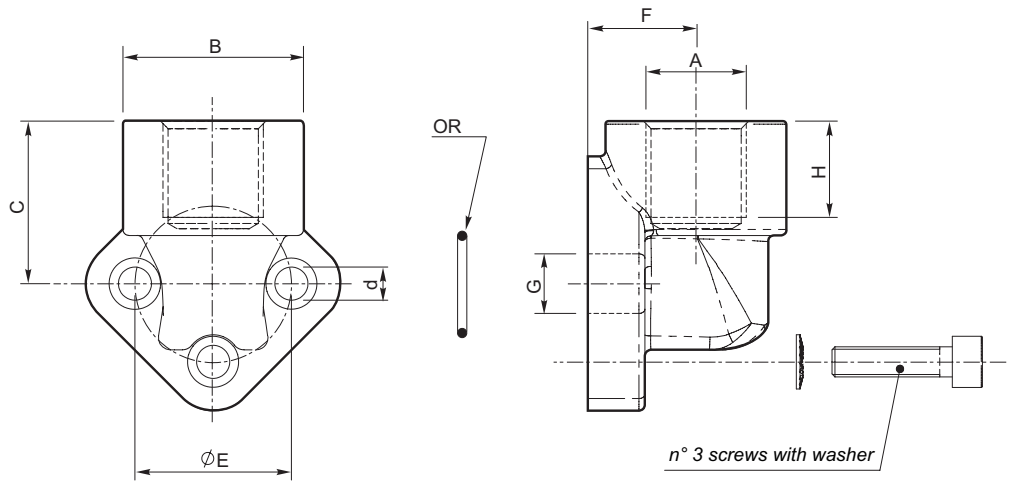

STEEL

Type	A	B	C	d	E	F	G	H	List Price £
FG3826	3/8" BSP	30 *(1.181)*	27.5 *(1.083)*	5.5 *(0.217)*	26 *(1.024)*	17 *(0.669)*	11 *(0.433)*	12 *(0.472)*	£11.17
FG3830	3/8" BSP	30 *(1.181)*	27.5 *(1.083)*	6.5 *(0.256)*	30 *(1.181)*	17 *(0.669)*	12 *(0.472)*	12 *(0.472)*	£11.17
FG1230	1/2" BSP	30 *(1.181)*	27.5 *(1.083)*	6.5 *(0.256)*	30 *(1.181)*	17 *(0.669)*	12 *(0.472)*	12 *(0.472)*	£11.17
FG3440	3/4" BSP	38 *(1.496)*	36 *(1.417)*	8.5 *(0.335)*	40 *(1.575)*	21 *(0.817)*	19 *(0.748)*	16 *(0.630)*	£14.28
FG151	1" BSP	45 *(1.772)*	47 *(1.850)*	10.5 *(0.413)*	51 *(2.008)*	26 *(1.024)*	25 *(0.984)*	18 *(0.709)*	£23.12
FG112725	1"1/2 BSP	63 *(2.480)*	56 *(2.205)*	13 *(0.512)*	72.5 *(2.854)*	34.5 *(1.358)*	40 *(1.575)*	24 *(0.945)*	£52.63

KOMPASS PUMPS

KOMPASS PUMPS 304

Kompass constantly endeavours to provide solutions and develop products based on technology experiences. Precise manufacturing facilities and International ISO 9001, CE and MCS quality assurance systems, assuring top quality products. KOMPASS products are used on Machine Centres, Metal Working Machine, Car Parking System, Plastic Injection Moulding Machines, Wood Processing Machines, Rubber Machines and Shoe Making Machines etc.

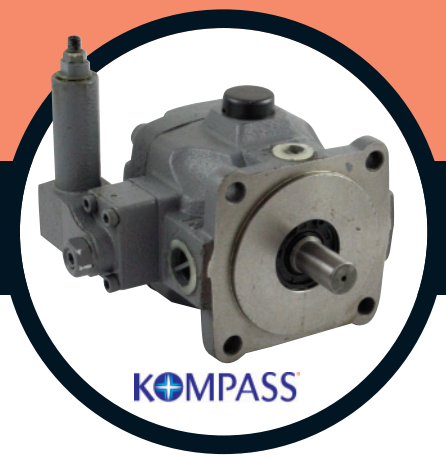

KOMPASS®

50% OFF ALL PRICES

70 BAR VARIABLE DISPLACEMENT SINGLE VANE PUMP

Tandem on request.

Pump supplied with parallel shaft, 4 bolt flange and BSP ports.

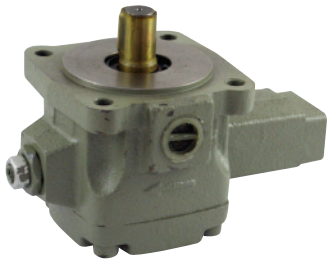

CODE	FLOW @ 1500 RPM	PRICE
VA1-08F-★	6.7 litre	£428.24
VA1-12F-★	10 litre	£428.24
VA1-15F-★	12.5 litre	£428.24
VB1-20F-★	16.7 litre	£510.23
VB1-24F-★	20 litre	£510.23
VC1-26F-★	21.7 litre	£601.34
VD1-25F-★	21 litre	£601.34
VD1-30F-★	25 litre	£601.34
VE1-35F-★	29.2 litre	£601.34
VE1-40F-★	33.3 litre	£601.34
VE1-45F-★	37.5 litre	£601.34
Pressure Ranges A1 = 8 - 20 Bar, A2 = 15 - 35 Bar, A3 = 30 - 70 Bar ★ Please specify		

140 BAR VARIABLE DISPLACEMENT SINGLE VANE PUMP

Tandem on request.

Pump supplied with 19.05mm parallel shaft, 4 bolt flange and BSP ports.

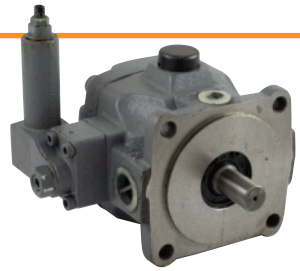

CODE	FLOW @ 1500 RPM	PRICE
VD2-30F-★	25 litre	£962.15
VE2-40F-★	33.3 litre	£1000.43
VF2-54F-★	45 litre	£2214.50
VK2-70F-★	58 litre	£2214.50
Pressure Ranges A3 = 50 - 150 Bar, A4 = 70 - 140 Bar • ★ Please specify		

210 - 286 BAR VARIABLE DISPLACEMENT PISTON PUMPS 286 BAR

Compensators available are Remote, Two Pressure Two Flow, Solenoid Cut-Off, Two Pressure Cut- Off & Load Sensing.

SAE 'A', 'B' & 'C' MTG flange. Side or axial ports available.

CODE	FLOW @ 1500 RPM	MAX PRESS. BAR	PRICE
P08-A★	12 litre	255	£903.84
P16-A★	24.7 litre	255	£954.85
P22-A★	33 litre	255	£1029.57
P36-A★	54 litre	255	£1599.94
P46-A★	69 litre	255	£1931.57
P70-A★	105 litre	286	£3926.96
Pressure Ranges 0 = 10 - 40 Bar, 1 = 20 - 70 Bar, 2 = 30 - 140 Bar, 3 = 40 - 210 Bar, 4 = 30 - 280 Bar • ★ = Please specify			
Prices are for Manual Compensators, please contact sales for other variations			

210 - 250 BAR VARIABLE DISPLACEMENT PISTON PUMPS 250 BAR

Controlled Pressure Compensating Type with Unloading Device, Duel Pressure, Duel & Remote Pressure, Two Flow & Two.

Pressure p.c. by Solenoid Operated Valve, Two Flow & Two Pressure p.c. by Solenoid Operated Remote Valve, Power Matching, Load Sensing, Load Sensing & Proportional Electrohydraulic Pilot Relief Valve, Proportional Electro-hydraulic.

Load sensing & Load-sensing & Proportional Flow Control.

CODE	FLOW @ 1500 RPM	MAX. PRESSURE BAR	PRICE
V15-A★	22.5 litre	250	£1230.66
V18-A★	26.7 litre	140	£1204.71
V23-A★	34.5 litre	250	£1301.09
V38-A★	56.7 litre	250	£2066.45
V50-A★	77.25 litre	210	£3750.21
V70-A★	104.55 litre	210	£3994.59
Pressure Ranges 1 = 8 - 70 Bar, 2 = 15 - 140 Bar, 3 = 20 - 210 Bar, 4 = 20 - 250 Bar • ★ = Please specify			
Prices are for Manual Compensators, please contact sales for other variations			

Pumps supplied with parallel shaft, SAE 'A', 'B' & 'C' MTG flange and flanged ports. Side or axial ports available.
Splined shaft optional.

350 BAR VARIABLE DISPLACEMENT PISTON PUMPS 350 BAR

Compensators available are Manual, Load Sensing, 2 Valve Load Sensing with Interface NG6, Remote Pressure with Interface

NG6, Remote Pressure, Horsepower Pilot Flow Internal Pressure Valve Included, Proportional Electro-Hydraulic Load Sensing and Load-Sensing with Interface NG6.

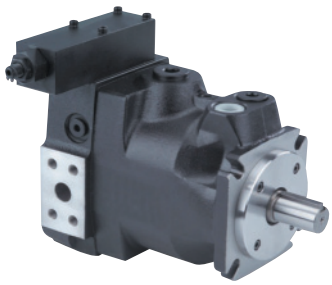

CODE	FLOW @ 1500 RPM	MAX. SPEED	MAX PRESS. BAR	PRICE
PV16-A★	24 litre	2750 RPM	350	£2201.29
PV20-A★	30 litre	2750 RPM	350	£2401.74
PV23-A★	34.5 litre	2750 RPM	350	£2529.29
PV63-A★	94.5 litre	2100 RPM	350	£5128.55
PV80-A★	120 litre	2000 RPM	350	£5645.35
PV92-A*	138 litre	1900 RPM	350	£5955.12
Pressure Ranges 2 = 10 - 140 Bar, 3 = 40 - 210 Bar, 4 = 70 - 350 Bar ★ = Please specify				
Prices are for Manual Compensators, please contact sales for other variations				

Pumps supplied with parallel shaft, 4 bolt flange and flanged ports.
Splined shaft optional.

PUMP BEARING SUPPORTS

GROUP 1 BEARING SUPPORT.....307
GROUP 2 BEARING SUPPORT.....307
GROUP 2 BEARING SUPPORT REINFORCED.....308
GROUP 2 BEARING SUPPORT REINFORCED.....308
GROUP 3 BEARING SUPPORT REINFORCED.....309
GROUP 3 BEARING SUPPORT.....309
GROUP 3 BEARING SUPPORT SAE A.....310
GROUP 3 BEARING SUPPORT SAE B 2 BOLT 310
GROUP 3.5 BEARING SUPPORT.....311
GROUP 2 BEARING SUPPORT BOSCH 311
GROUP 3 BEARING SUPPORT BOSCH 312
GROUP 2 BEARING SUPPORT BOSCH 312
GROUP 2 BEARING SUPPORT.....313
GROUP 4 BEARING SUPPORT.....314
FLANGES FOR GROUP 4 BEARING SUPPORTS.....315
GROUP 3 CAST IRON BEARING SUPPORT.....316

Pump bearing supports designed for independent drives of hydraulic pumps via chains, belts,gears with high radial loads.

They are directly flanged onto the pump via splined half-couplings.

The life of the bearing supports is 3500 hours at 15000 rpm.

Grease according to DIN 51502 standard MPF 1K-20.

FLOWFIT

GROUP 1 BEARING SUPPORT

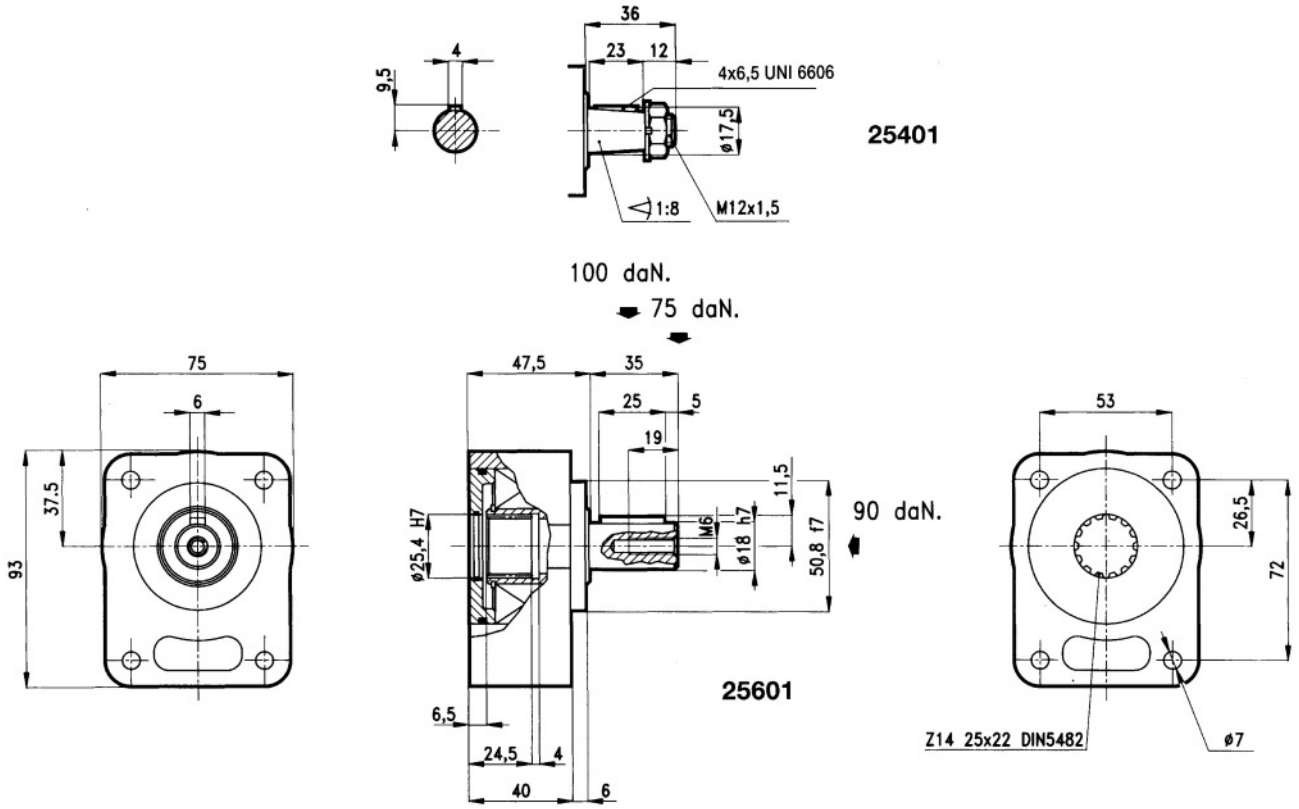

PART NO.	DESCRIPTION	PRICE
23 – 25401	Pump Bearing Support gr.1 tapered shaft	£84.29
24 – 25601	Pump Bearing Support Support gr.1 cylindrical shaft	£84.29

GROUP 2 BEARING SUPPORT

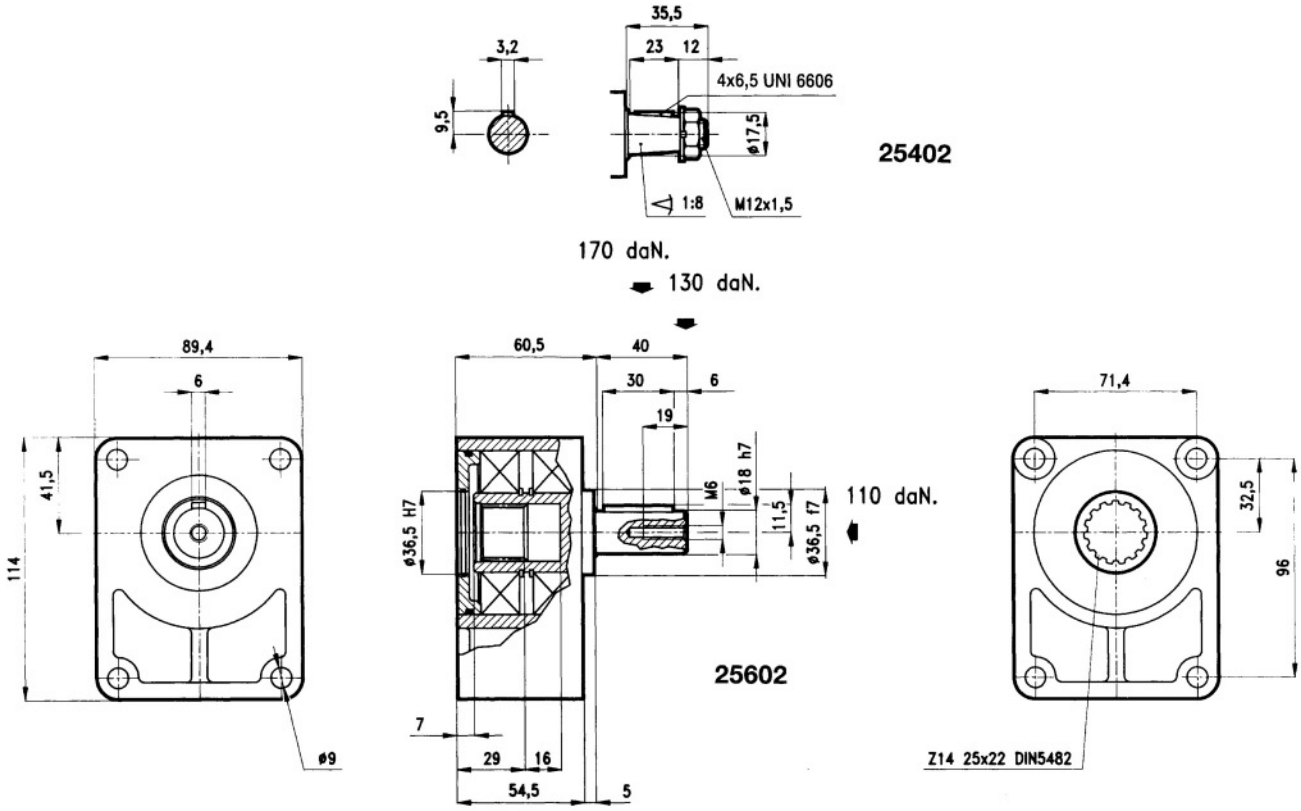

PART NO.	DESCRIPTION	PRICE
23 – 25402	Pump Bearing Support gr.2 tapered shaft	£98.25
24 - 25602	Pump Bearing Support gr.2 cylindrical shaft	£98.25

GROUP 2 BEARING SUPPORT REINFORCED

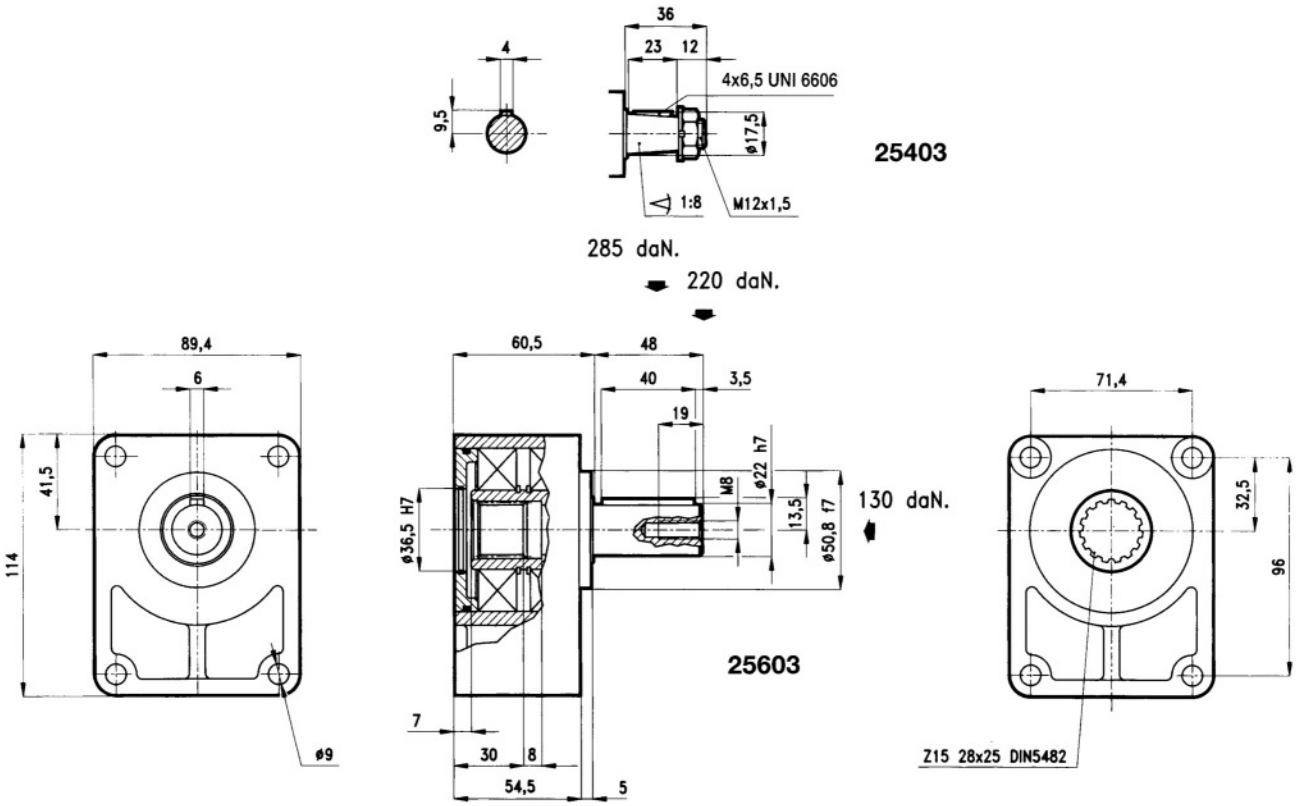

PART NO.	DESCRIPTION	PRICE
23 – 25403	Pump Bearing Support gr.2/R tapered shaft	£107.43
24 – 25603	Pump Bearing Support gr.2/R cylindrical shaft 2 bearings	£107.43

GROUP 2 BEARING SUPPORT REINFORCED

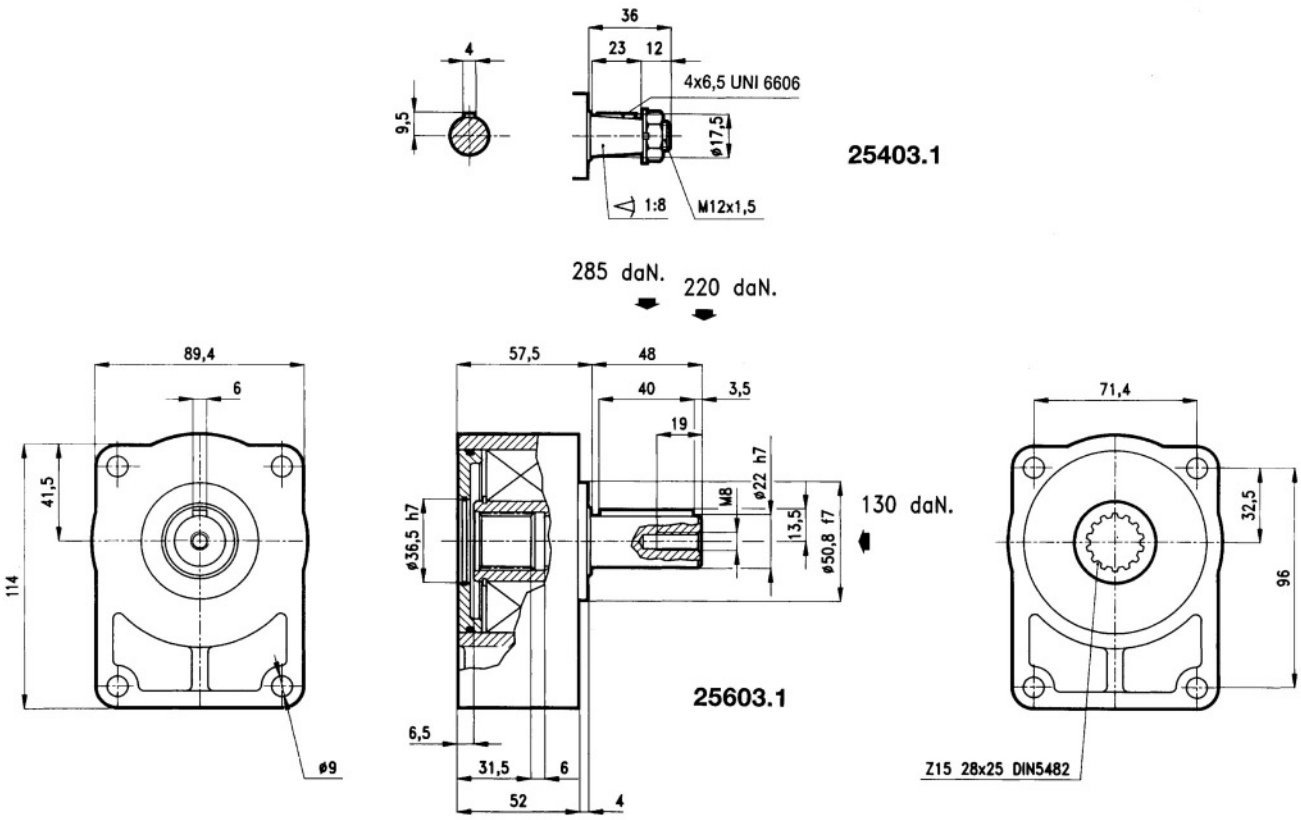

PART NO.	DESCRIPTION	PRICE
23 - 25403-1	Pump Bearing Support gr.2/R tapered shaft key 3,2	£102.19
24 - 25603-1	Pump Bearing Support gr.2/R cylindrical shaft 1 bearing	£107.43

50% OFF ALL PRICES

GROUP 3 BEARING SUPPORT REINFORCED

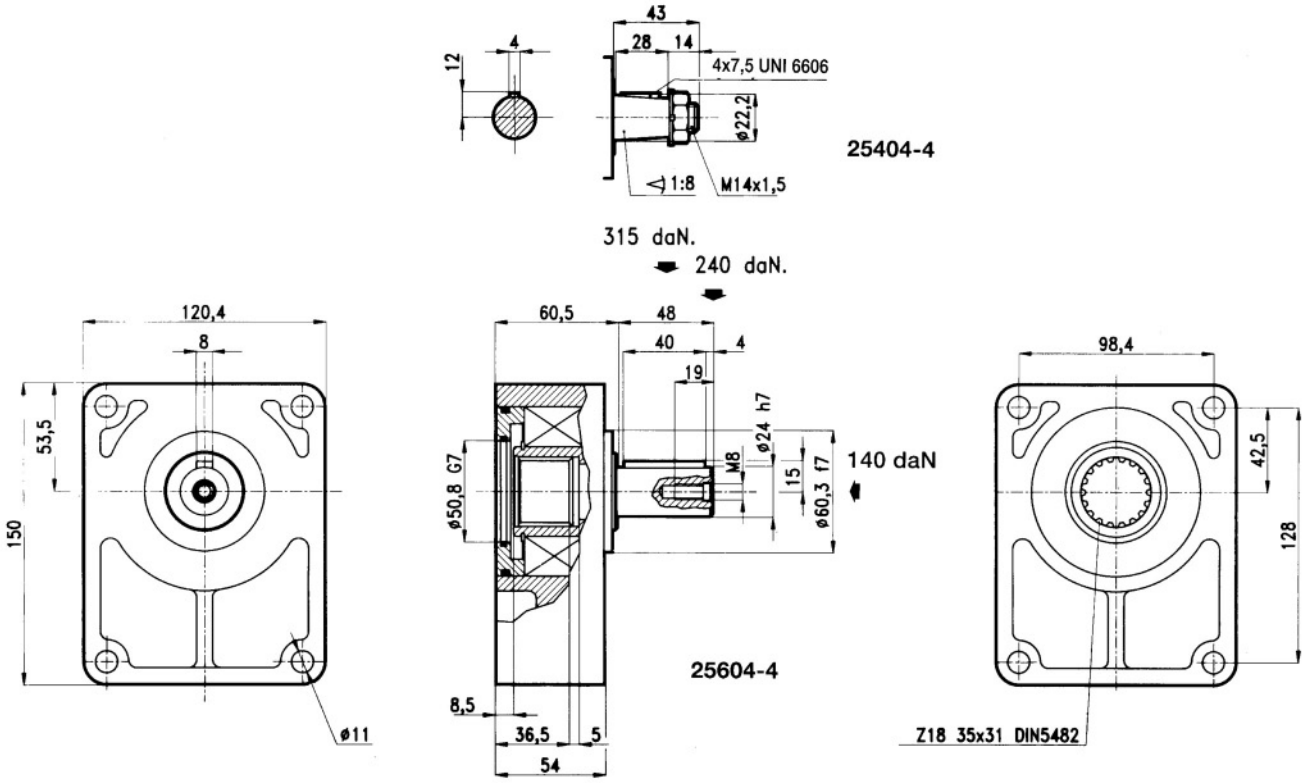

PART NO.	DESCRIPTION	PRICE
23 - 25404-4	Pump BearingSupport gr.3 tapered shaft 4 holes	£231.90
24 - 25604-4	Pump Bearing Support gr.3 cylindrical shaft 4 holes	£231.90

GROUP 3 BEARING SUPPORT

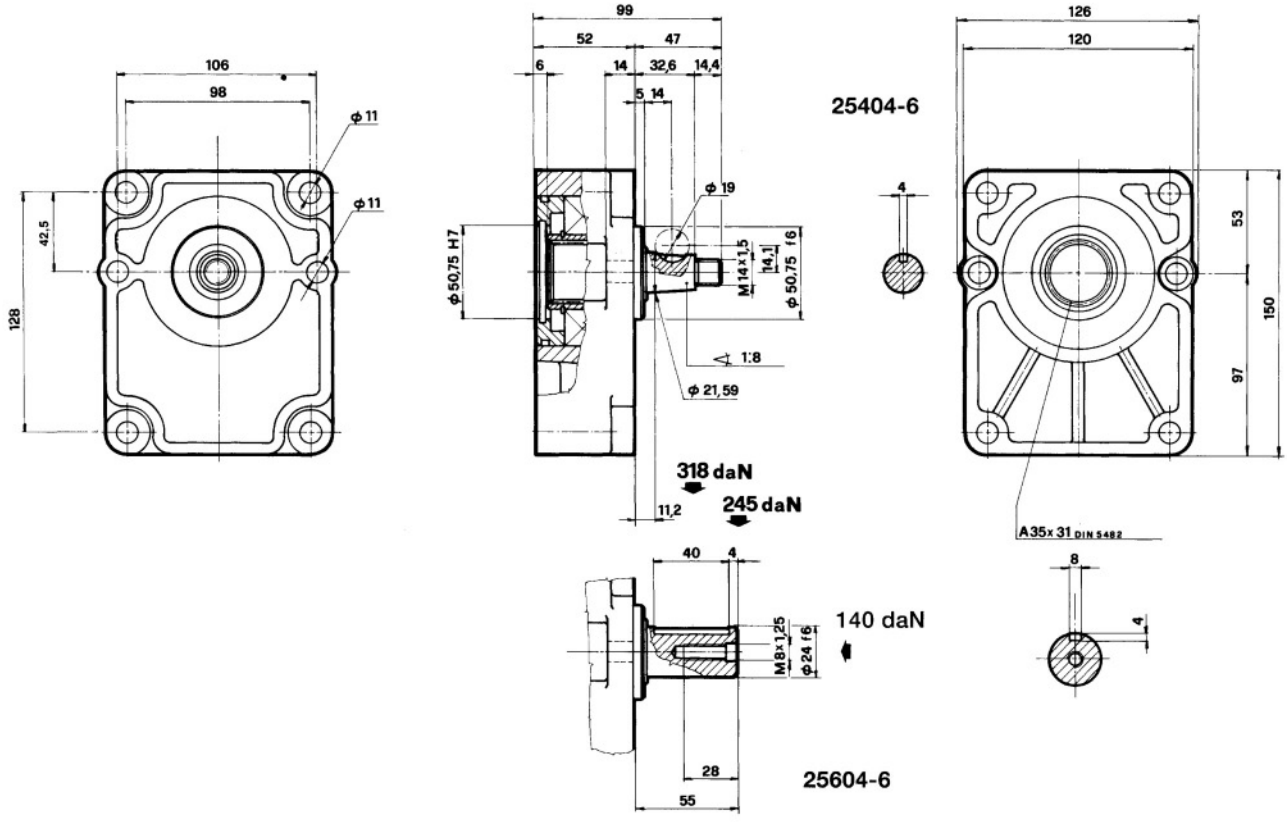

PART NO.	DESCRIPTION	PRICE
23 - 25404-4	Pump Bearing Support gr.3 tapered shaft 4 holes	£231.90
24 - 25604-6	Pump Bearing Support gr.3 cylindrical shaft 6 holes	£150.67

GROUP 3 BEARING SUPPORT SAE A

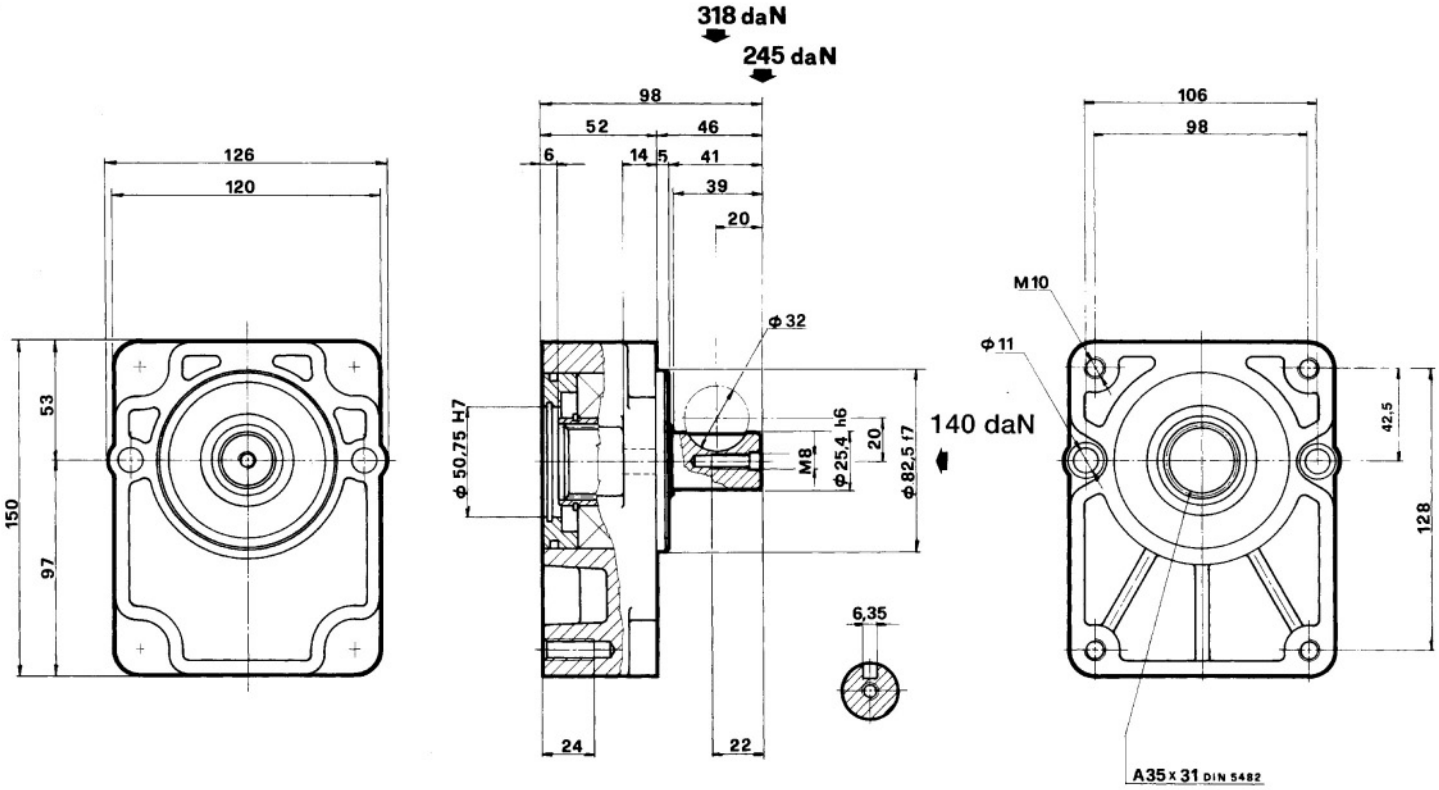

25607

PART NO.	DESCRIPTION	PRICE
24 - 25607	Pump BearingSupport gr.3 SAE A cylindrical shaft	£163.78

GROUP 3 BEARING SUPPORT SAE B 2 BOLT

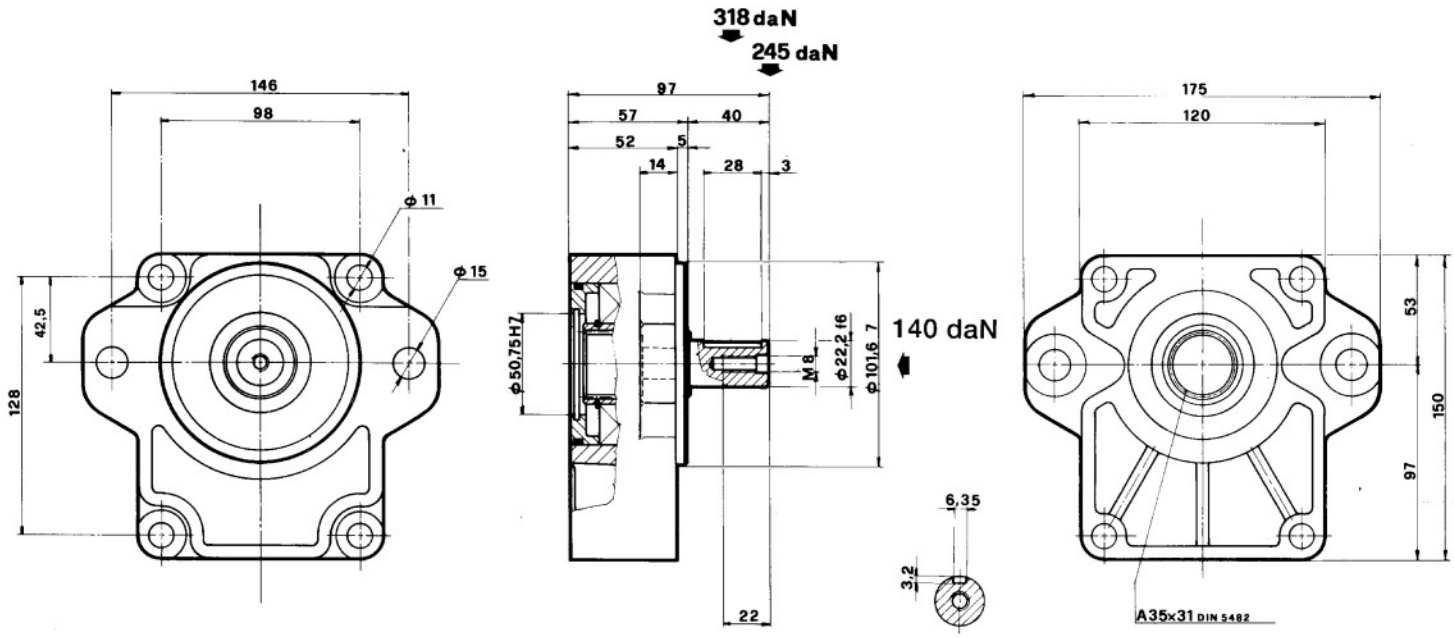

PART NO.	DESCRIPTION	PRICE
24 – 25608	Pump Bearing Support gr.3 SAE B cylindrical shaft	£163.78

50% OFF ALL PRICES

GROUP 3.5 BEARING SUPPORT

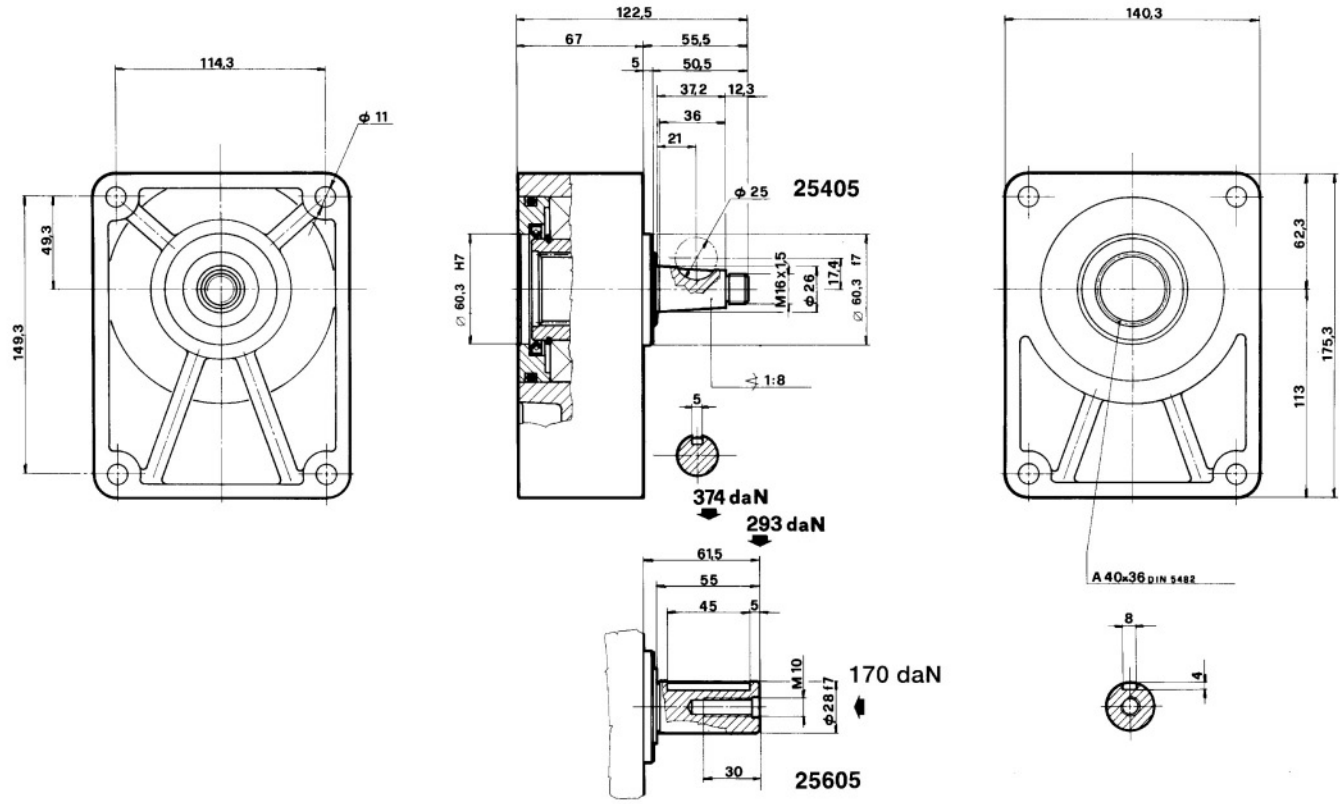

PART NO.	DESCRIPTION	PRICE
23 – 25405	Pump Bearing Support gr.3,5 tapered shaft	£366.87
24 – 25605	Pump BearingSupport gr.3,5 cylindrical shaft	£364.24

GROUP 2 BEARING SUPPORT BOSCH

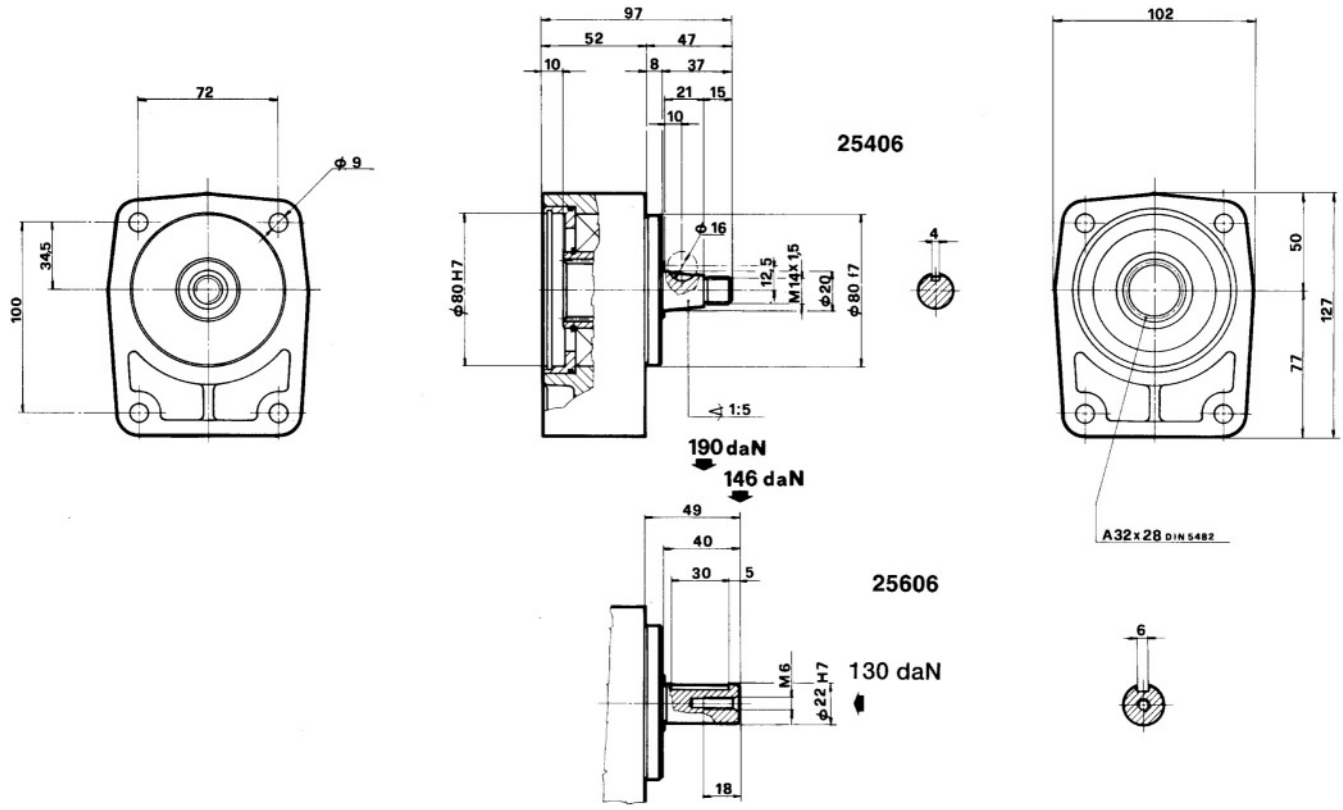

PART NO.	DESCRIPTION	PRICE
23 – 25406	Pump Bearing Support gr.2 Bosch tapered shaft	£121.84
24 – 25606	Pump BearingSupport gr.2 Bosch cylindrical shaft	£121.84

GROUP 3 BEARING SUPPORT BOSCH

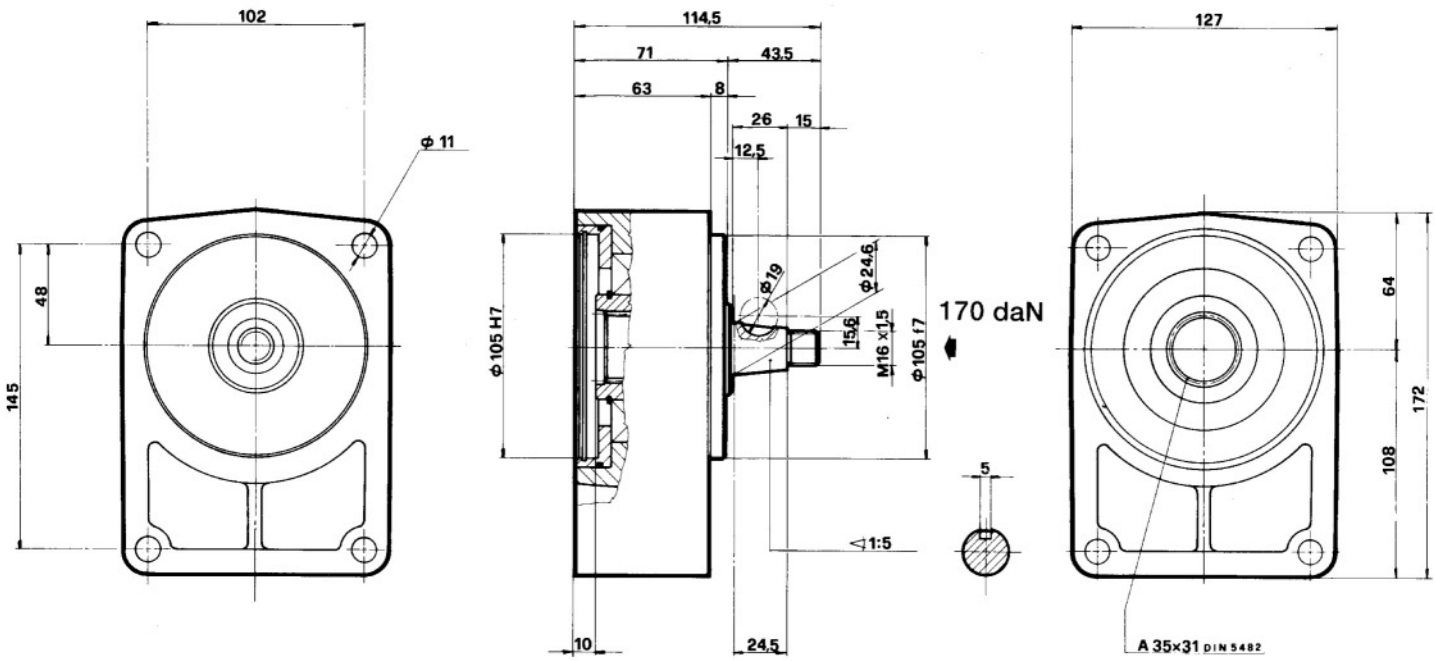

25407

PART NO.	DESCRIPTION	PRICE
23-25407	Pump Bearing Support Bosch tapered shaft	TBA

GROUP 2 BEARING SUPPORT BOSCH

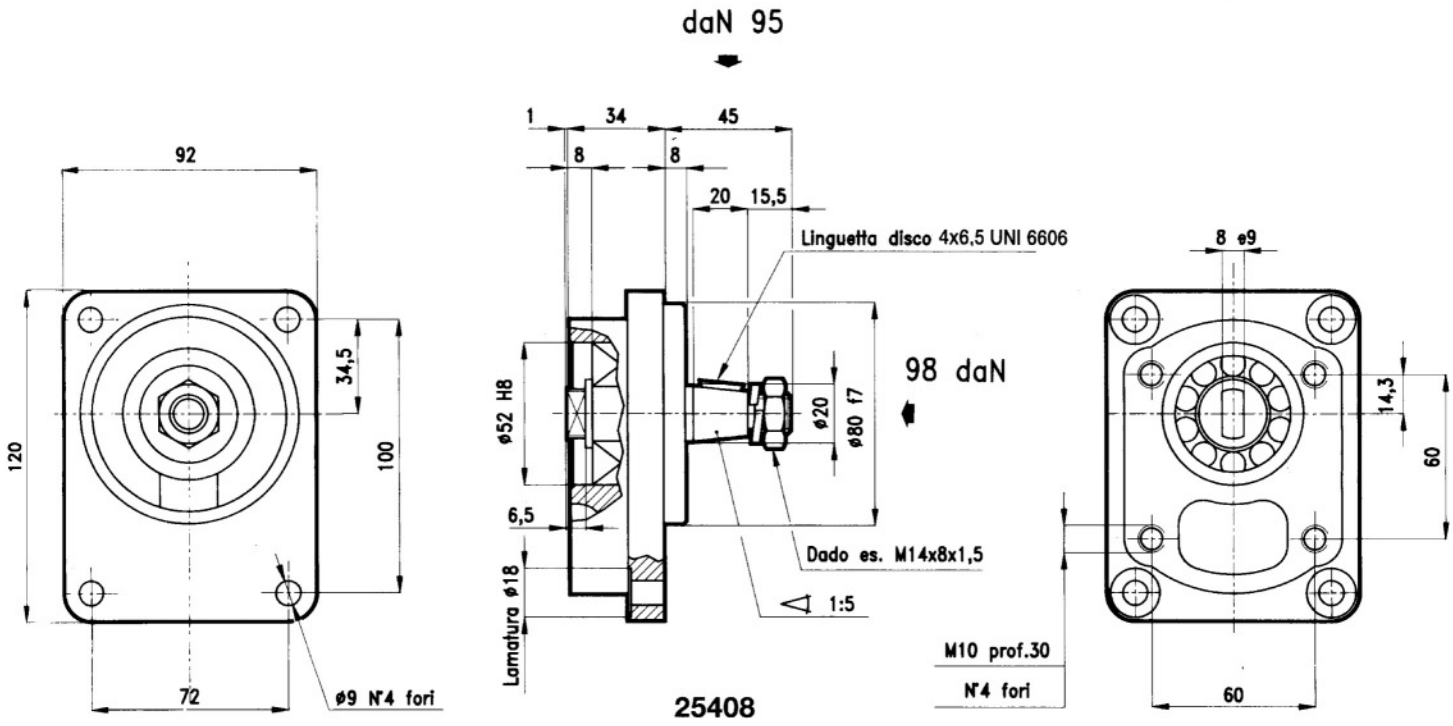

25408

PART NO.	DESCRIPTION	PRICE
23 – 25408 Pump	Bearing Support gr.2 SUI 52-80	£133.63

50% OFF ALL PRICES

GROUP 2 BEARING SUPPORT

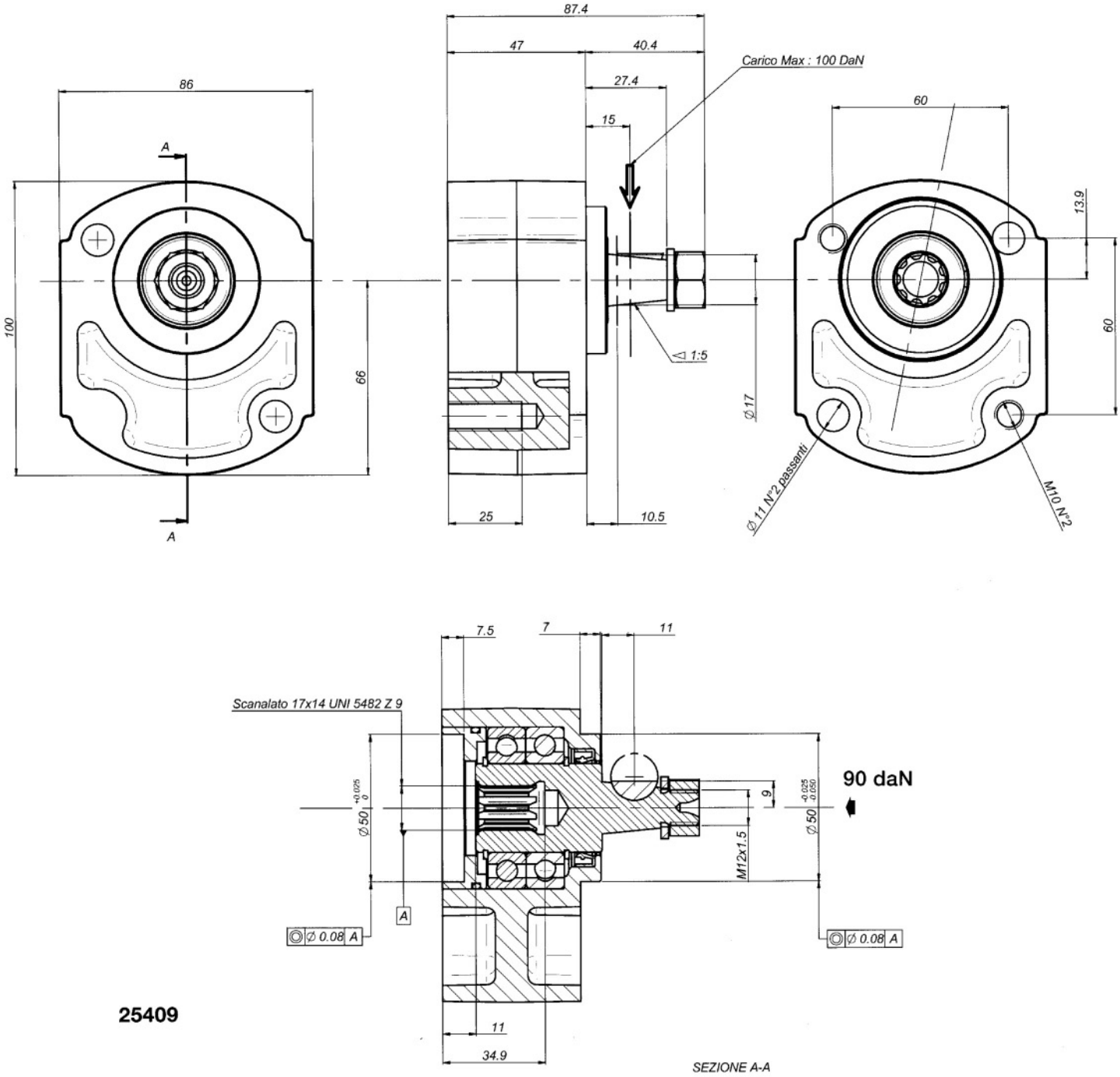

25409

PART NO.	DESCRIPTION	PRICE
23 – 25409	Pump BearingSupport gr.2 T54B5 B17X14	£133.63

GROUP 4 BEARING SUPPORT

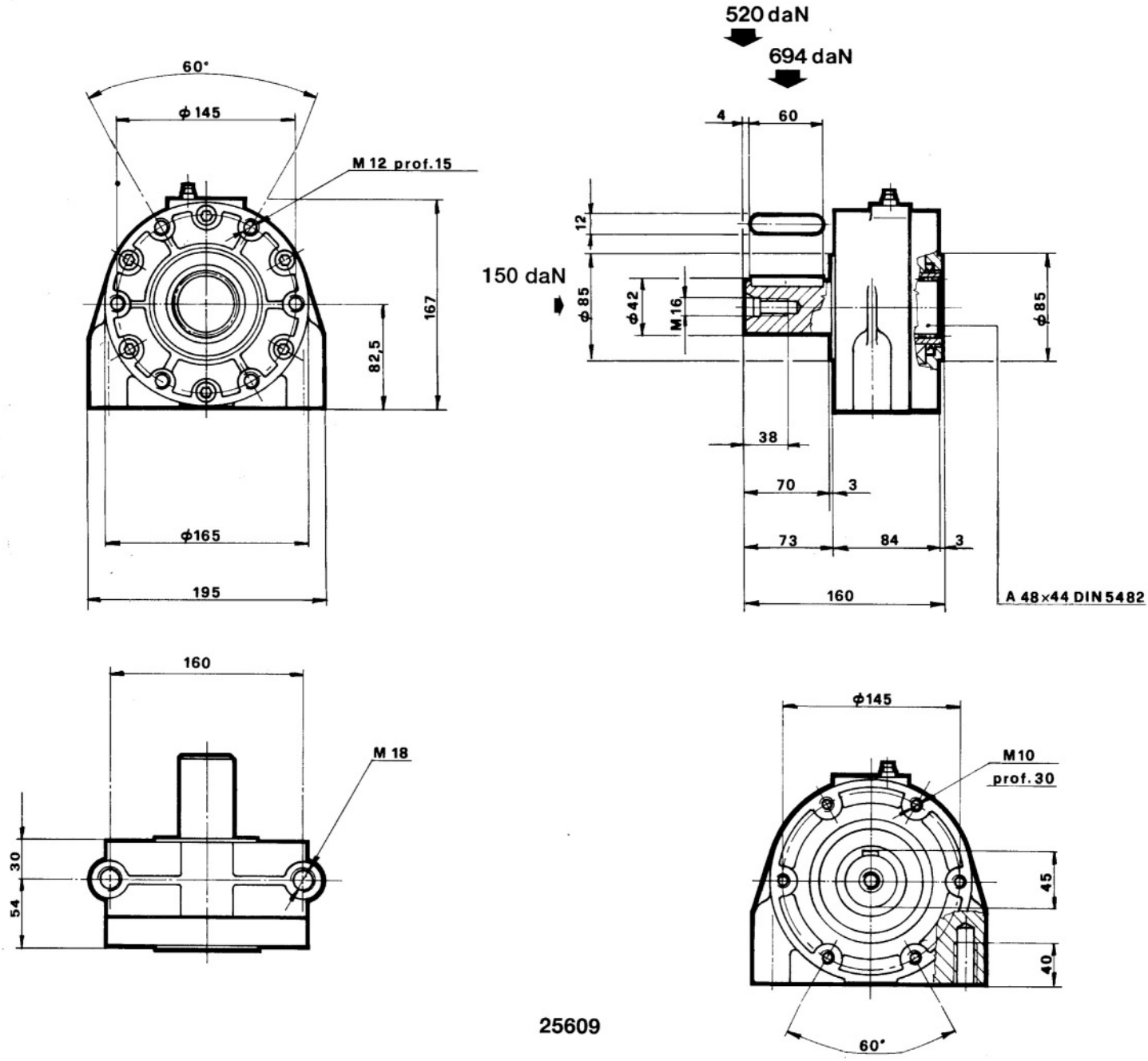

PART NO.	DESCRIPTION	PRICE
24 - 25609	Pump Bearing Support gr.4	£491.32

FLANGES FOR GROUP 4 BEARING SUPPORTS

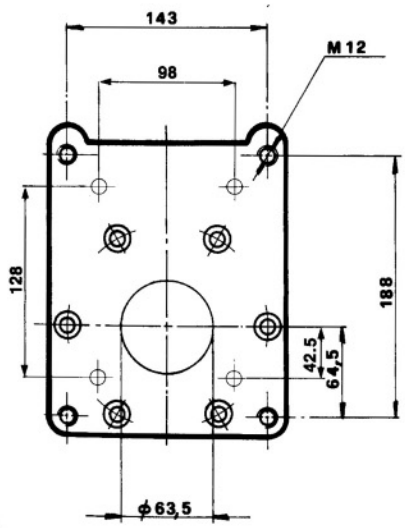

4 P 30403
3 P 30401

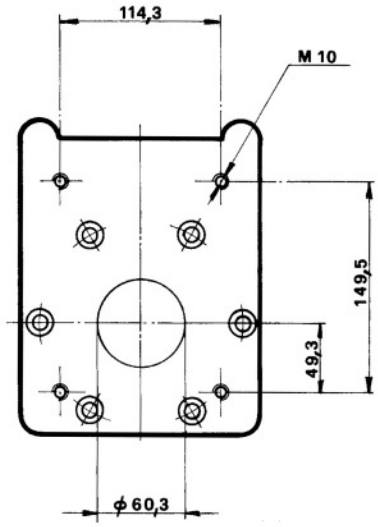

3,5 P 30402

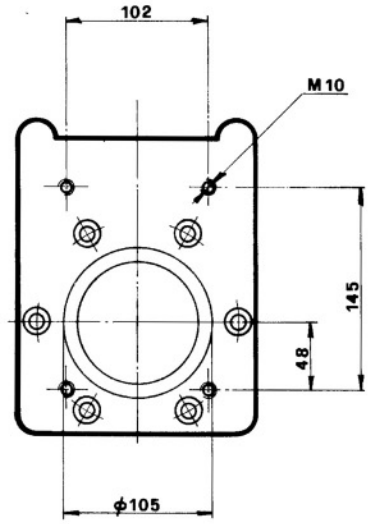

Bosch ZG3 30417

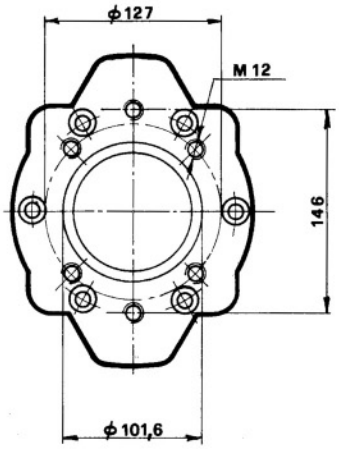

SAE B 2-4 fori
30421 - 30422

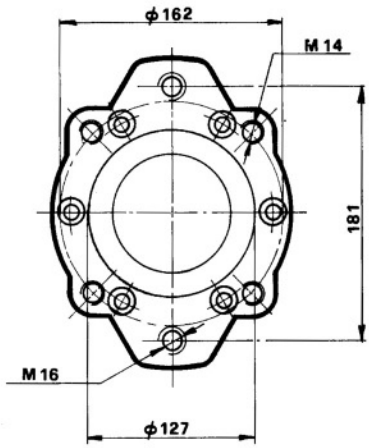

SAE C 2-4 fori
30431 - 30432

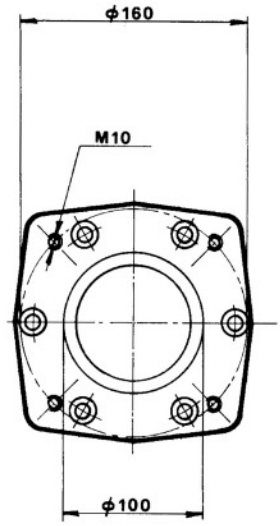

Linde Guldner PF 20-35-50
30461 - 30462

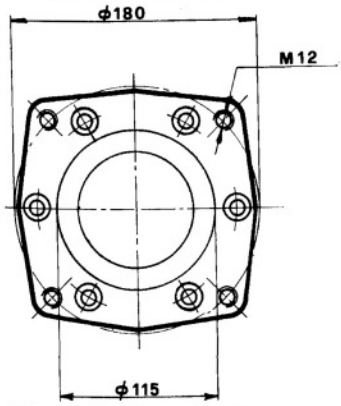

Linde Guldner PF 75
30463

PART NO.	DESCRIPTION	PRICE
28 - 30401	Flange gr.3+socket capscrews	£96.96
28 - 30402	Flange gr.3,5+socket capscrews	£94.33
28 - 30403	Flange gr.4+socket capscrews	£94.33
28 – 30417	Flange gr.3 Bosch+socket capscrews	£119.22
28 – 30420	Flange SAE A 2 holes+socket capscrews	£94.33
28 - 30421	Flange SAE B 2 holes+socket capscrews	£119.22
28 - 30422	Flange SAE B 4 holes+socket capscrews	£119.22
28 - 30431	Flange SAE C 2 holes+socket capscrews	£119.22
28 – 30432	Flange SAE C 4 holes+socket capscrews	£119.22
28 – 30461	Flange L.G. 20-35+socket capscrews	£119.22
28 - 30462	Flange L.G. 50+socket capscrews	£119.22
28 - 30463	Flange L.G. 75+socket capscrews	£119.22
If the part number needed is not listed please ask the Flowfit Sales Team		

GROUP 3 CAST IRON BEARING SUPPORT

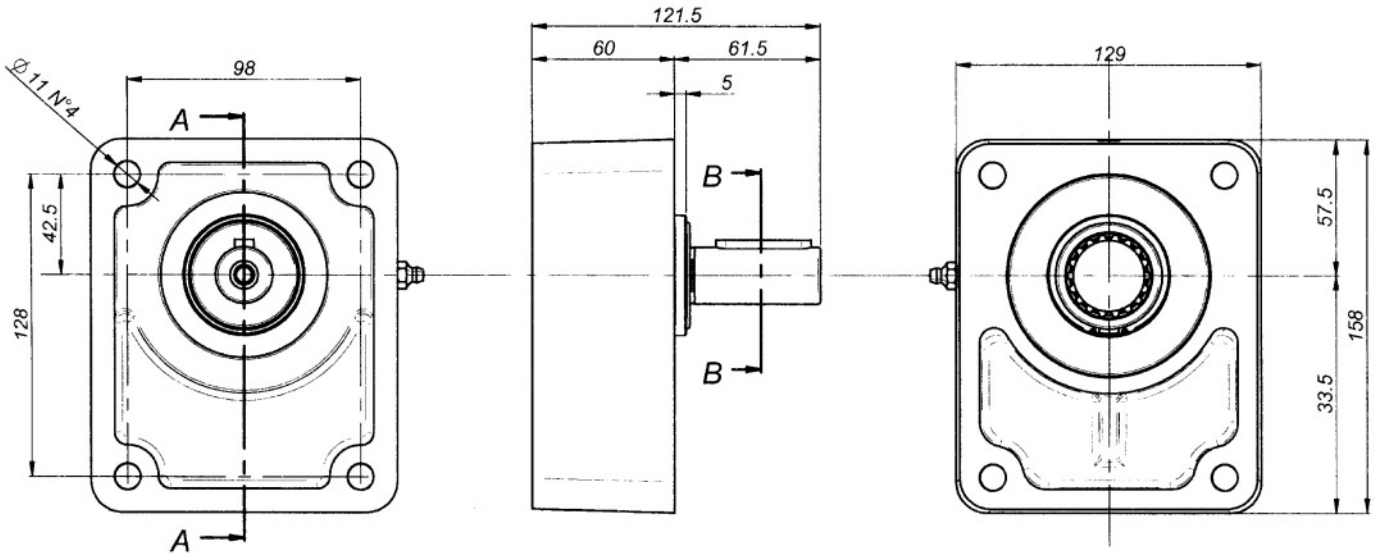

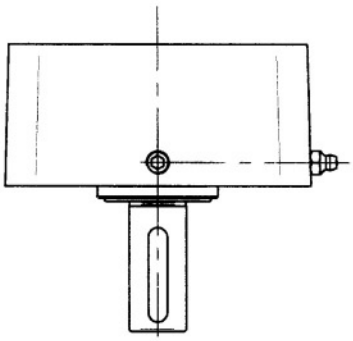

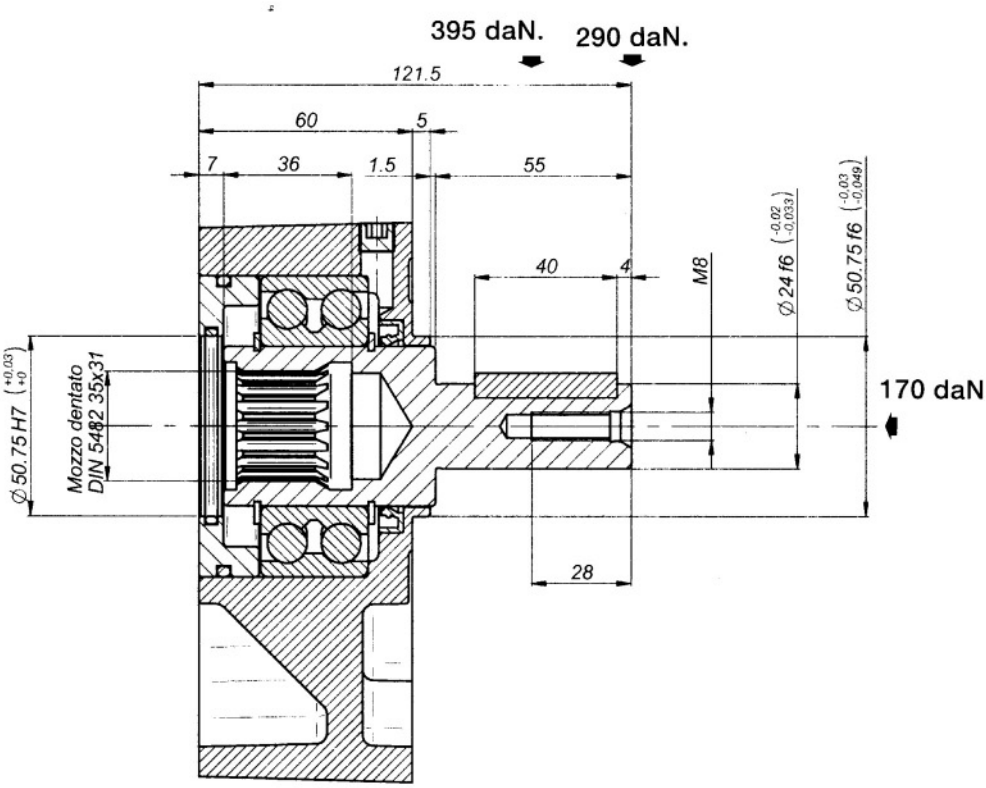

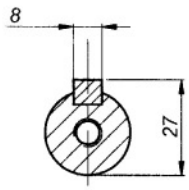

SEZ.: B-B
1:2

25610/24

SEZ.: A-A
1:2

PART NO.	DESCRIPTION	PRICE
24 - 25610/24	Pump Bearing Support gr.3 cast iron cylindrical shaft dia.24	£389.13

50% OFF ALL PRICES

GROUP 3 CAST IRON BEARING SUPPORT

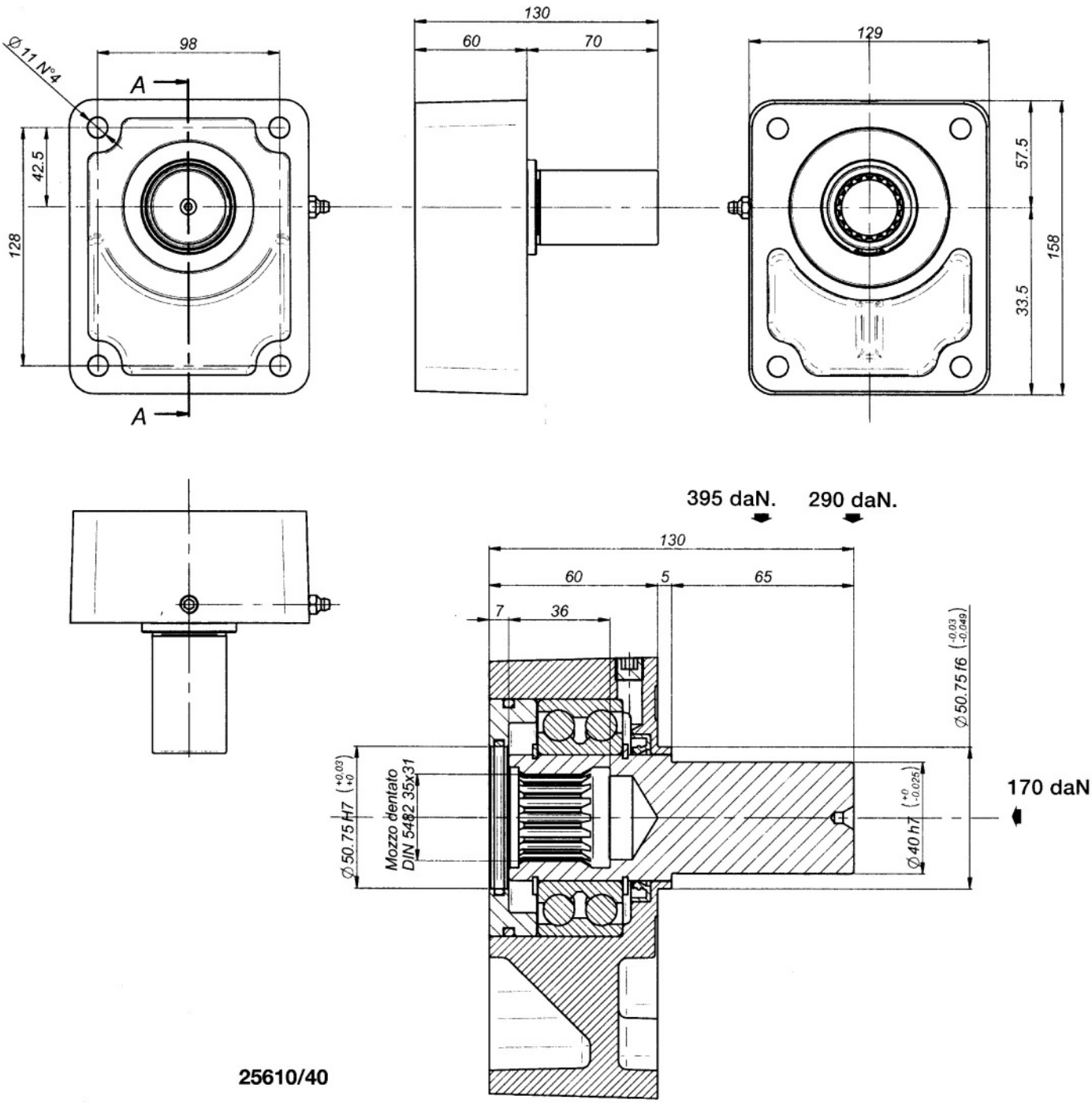

SEZIONE A-A

PART NO.	DESCRIPTION	PRICE
24 - 25610/40	Pump BearingSupport gr.3 cast iron cylindrical shaft dia.40	£389.13

HYDRAULIC HANDPUMPS

PMP 20s INLINE HAND PUMP 319
PMO 50s INLINE HAND PUMP 320
PMO 70s INLINE HAND PUMP 321
PMP 20 byB-s INLINE HAND PUMP 322
PMO 50 byB-s INLINE HAND PUMP 323
PMO 70 byB-s INLINE HAND PUMP 324
PM 6-12-25-45 byB-s TANK MOUNTED HAND PUMP 325
PMD 6-12-25-45 byB-s TANK MOUNTED HAND PUMP 326
PMDVB 6-12-25-45 byAB-s TANK MOUNTED HAND PUMP .327
PMP 25 eINLINE HAND PUMP 328
PPSE 5b yB INLINE HAND PUMP 328
STRAIGHT LEVERS FOR HAND PUMPS 329
FOLDLEVER SFORHAND PUMPS 329
STEEL OIL TANKS FOR HAND PUMPS 330

FLOWFIT

50% OFF ALL PRICES

PMP 20 s

With release hand knob

To operate a single acting cylinder and to provide manual handpump flow

★★★★★ Includes Rubber Bellows and Release Hand Knob as standard

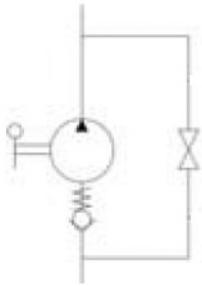

SEE PAGE 329 FOR LEVERS

SPECIFICATIONS

- Piston treated with Niploy
- Lever connection: Ø 27
- Standard colour: Black

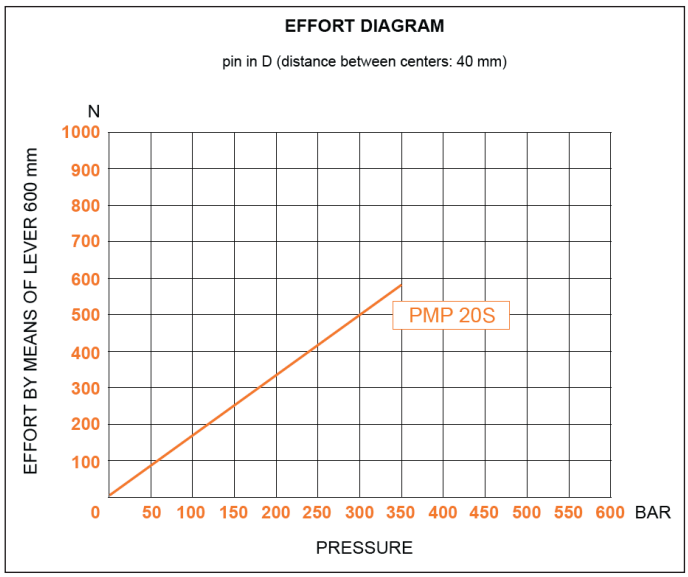

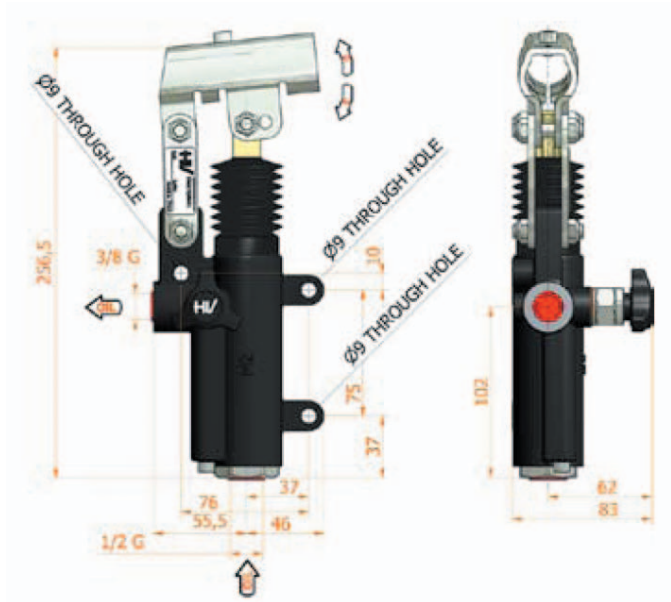

DISPLACEMENT cm³	D °	E °	ACTUAL DISPLACEMENT cm³	PRESSURE BAR		MASS KG	CODE WITH BELLOWS	PRICE
				WORK P.	MAX			
20	32	30	20,090	280	350	2,650	6074.0059	£192.94

PMO 50 s

With release hand knob

To operate a single acting cylinder and to provide manual handpump flow

★★★★★ Includes Rubber Bellows and Release Hand Knob as standard

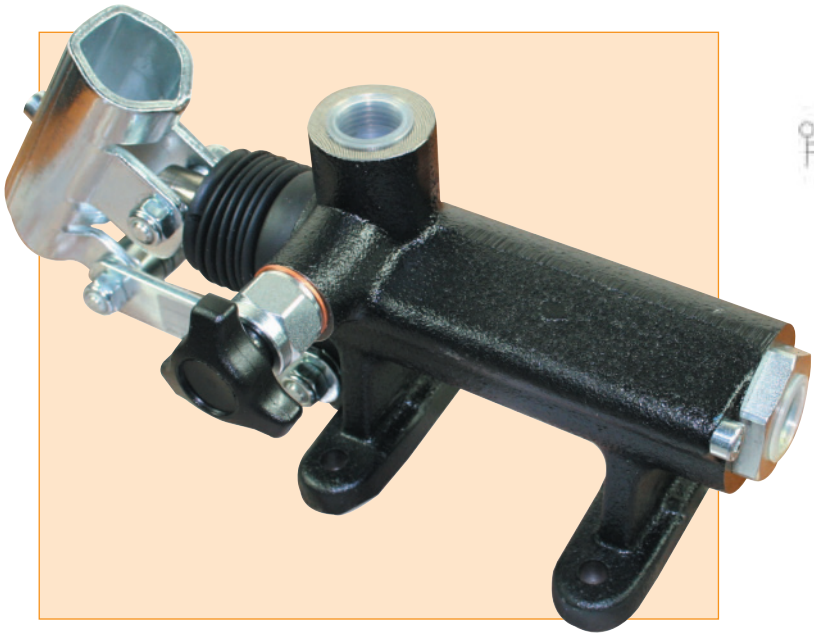

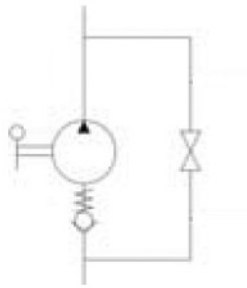

SEE PAGE 329 FOR LEVERS

SPECIFICATIONS

- Piston treated with Niploy
- Lever connection: Ø 27
- Standard colour: Black

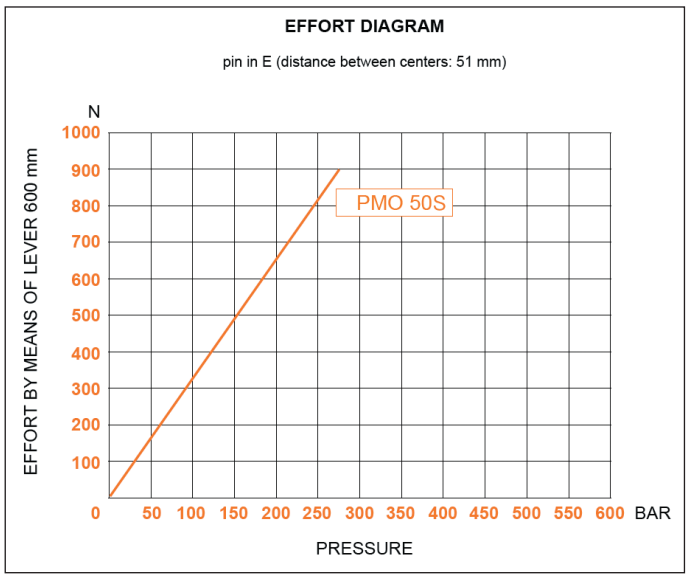

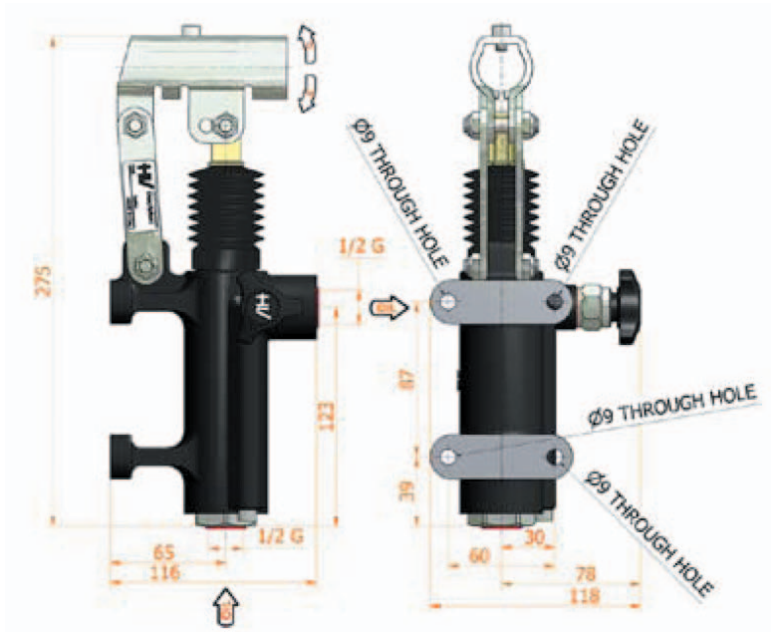

DISPLACEMENT cm³	D °	E °	ACTUAL DISPLACEMENT cm³	PRESSURE BAR WORK P.	PRESSURE BAR MAX	MASS KG	CODE WITH BELLOWS	PRICE
50	38	37	43.825	220	280	3,400	6077.0032	£214.19

50% OFF ALL PRICES

PMO 70 s

With release hand knob

To operate a single acting cylinder and to provide manual handpump flow

★★★★★ Includes Rubber Bellows and Release Hand Knob as standard

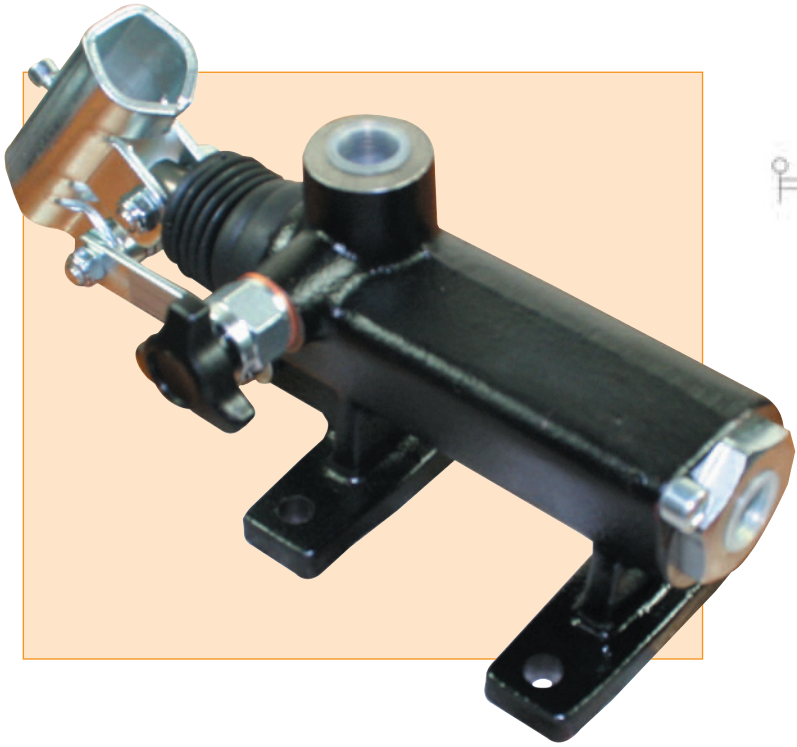

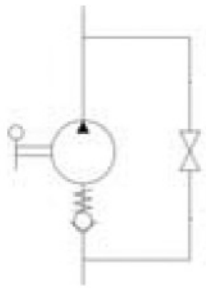

SEE PAGE 329 FOR LEVERS

SPECIFICATIONS

- Piston treated with Niploy
- Lever connection: Ø 27
- Standard colour: Black

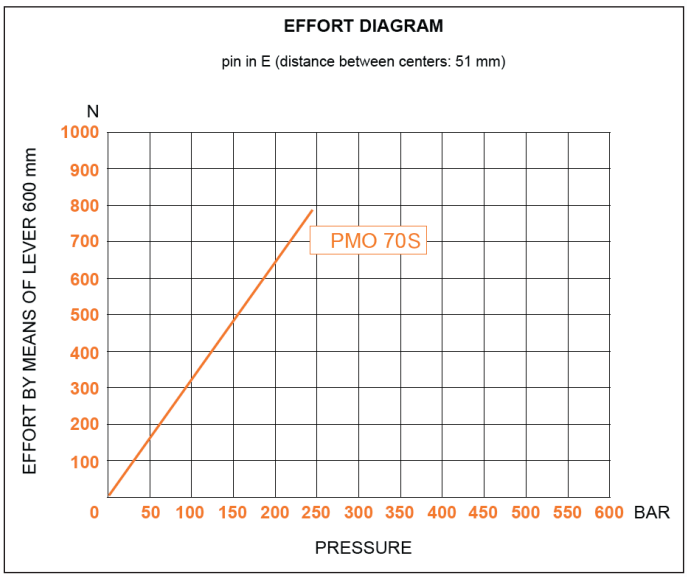

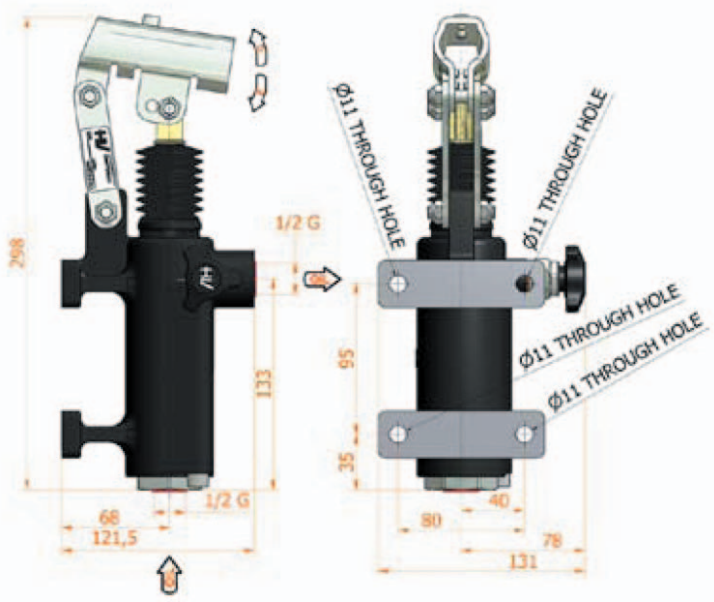

DISPLACEMENT cm³	D °	E °	ACTUAL DISPLACEMENT cm³	PRESSURE BAR WORK P.	PRESSURE BAR MAX	MASS KG	CODE WITH BELLOWS	PRICE
70	45	40	70.233	180	230	5.100	6079.0032	£299.16

PMP 20 byB-s

With release nut.

With pressure relief valve

Double acting hand pump for single acting cylinder for fixing to wall

★★★★★
Includes Rubber Bellows and Relief Valve as standard

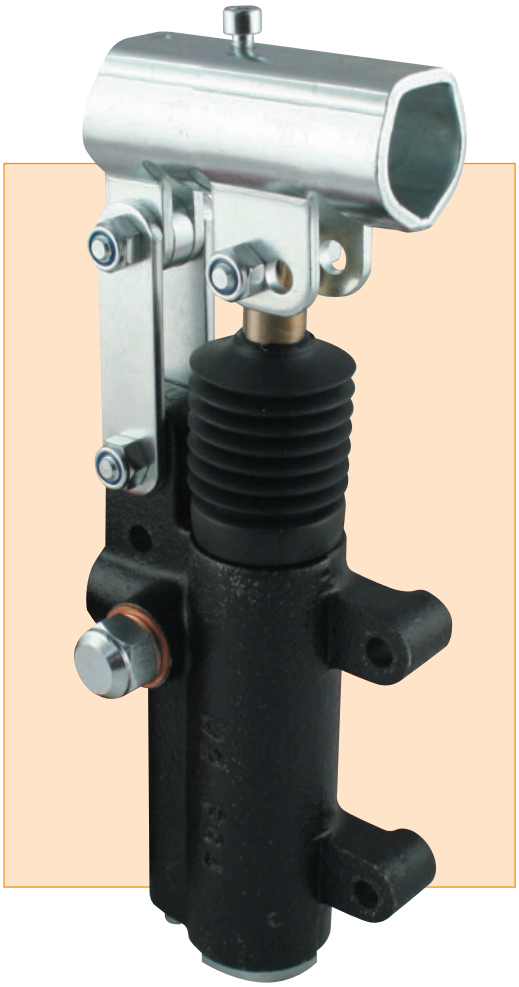

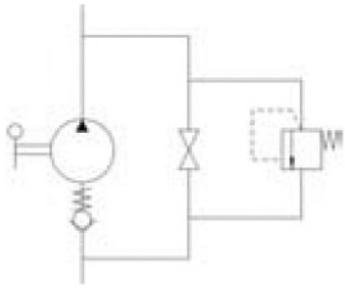

SEE PAGE 329 FOR LEVERS

SPECIFICATIONS

- Piston treated with Niploy
- Lever connection: Ø 27
- Standard colour: Black
- Pressure relief valve standard setting: 100 bar

RELIEF VALVE ADJUSTMENT

Unscrew dome cover and adjust screw inwards to increase pressure setting. Factory set at 100 bar.

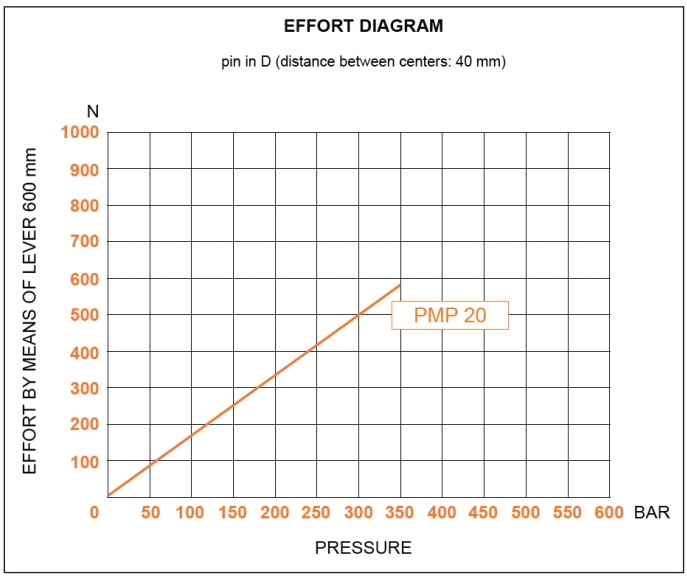

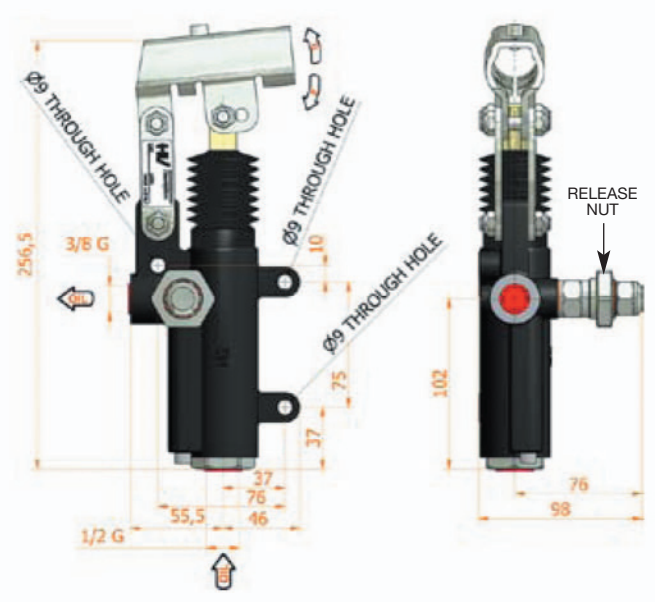

DISPLACEMENT cm³	D °	E °	ACTUAL DISPLACEMENT cm³	PRESSURE BAR WORK P.	PRESSURE BAR MAX	MASS KG	CODE WITH BELLOWS	PRICE
20	32	30	20,090	280	350	2,650	6074.0065	£192.94

50% OFF ALL PRICES

PMO 50 byB-s

With release nut.

With pressure relief valve

Double acting hand pump for single acting cylinder for fixing to wall

★★★★★ Includes Rubber Bellows and Relief Valve as standard

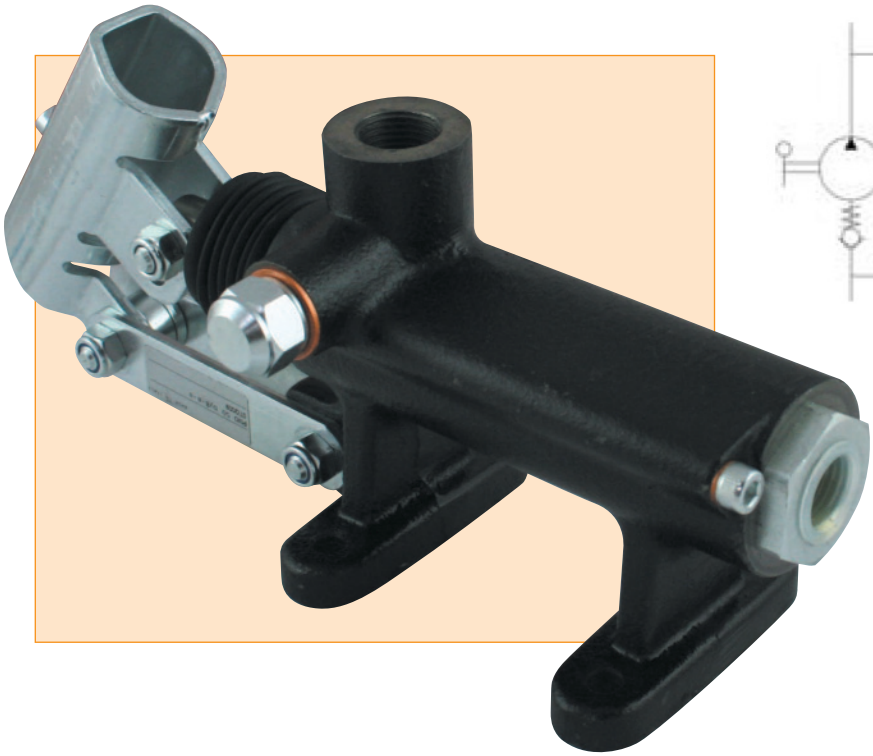

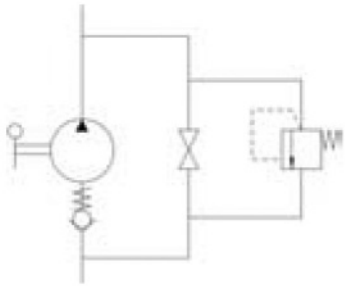

SEE PAGE 329 FOR LEVERS

SPECIFICATIONS

- Piston treated with Niploy
- Lever connection: Ø 27
- Standard colour: Black
- Pressure relief valve standard setting: 100 bar

RELIEF VALVE ADJUSTMENT

Unscrew dome cover and adjust screw inwards to increase pressure setting. Factory set at 100 bar.

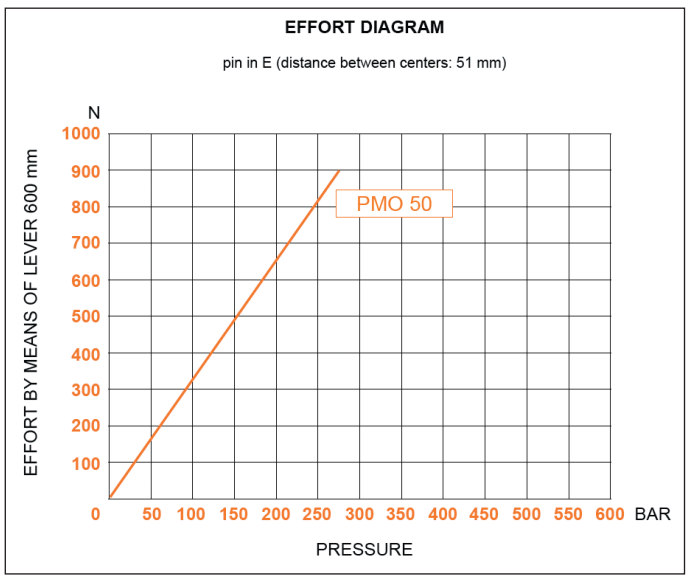

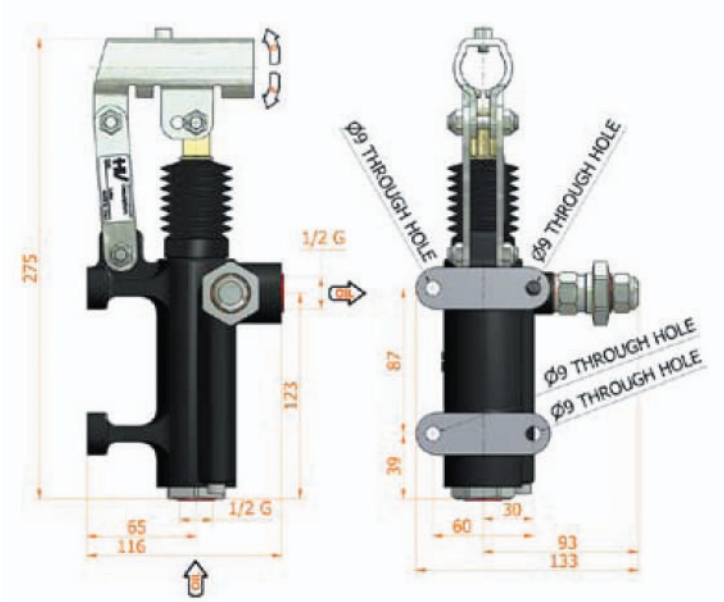

DISPLACEMENT cm³	D °	E °	ACTUAL DISPLACEMENT cm³	PRESSURE BAR WORK P.	PRESSURE BAR MAX	MASS KG	CODE WITH BELLOWS	PRICE
50	38	37	43.825	220	280	3,400	6077.0037	£214.19

PMO 70 byB-s

With release nut.

With pressure relief valve

Double acting hand pump for single acting cylinder for fixing to wall

★★★★★
Includes Rubber Bellows and Relief Valve as standard

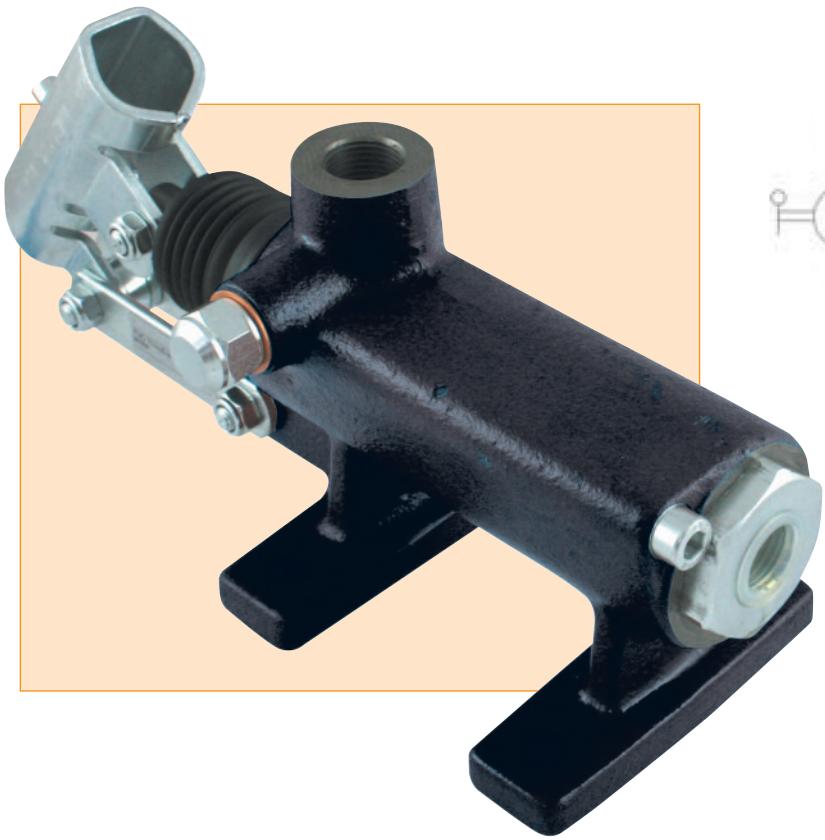

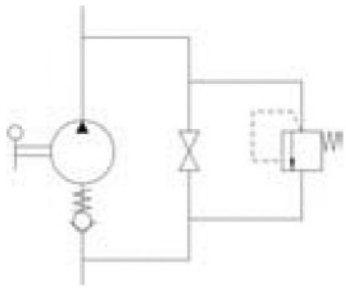

SEE PAGE 329 FOR LEVERS

SPECIFICATIONS

- Piston treated with Niploy
- Lever connection: Ø 27
- Standard colour: Black
- Pressure relief valve standard setting: 100 bar

RELIEF VALVE ADJUSTMENT

Unscrew dome cover and adjust screw inwards to increase pressure setting. Factory set at 100 bar.

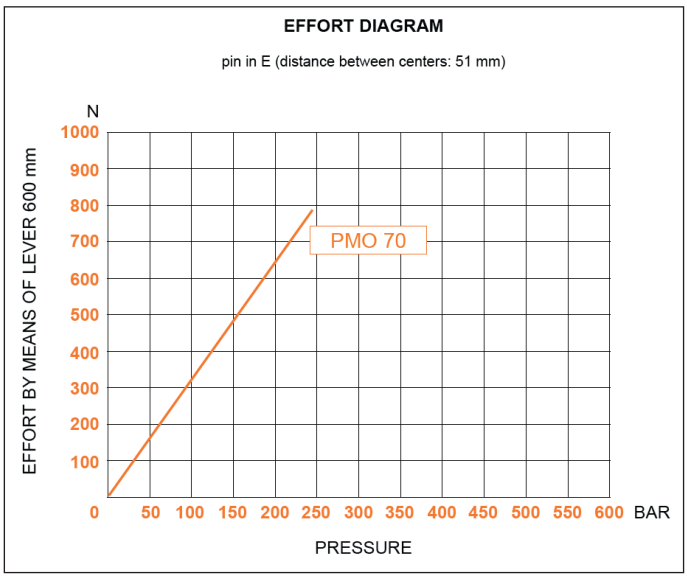

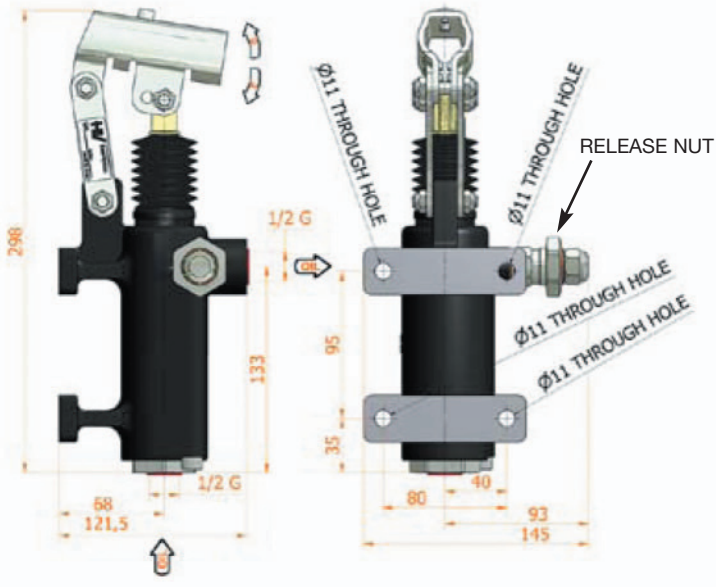

DISPLACEMENT cm³	D °	E °	ACTUAL DISPLACEMENT cm³	PRESSURE BAR WORK P.	PRESSURE BAR MAX	MASS KG	CODE WITH BELLOWS	PRICE
70	45	40	70.233	180	230	5.100	6079.0037	£299.16

50% OFF ALL PRICES

PM 6-12-25-45 byB-s

With release hand knob

With pressure relief valve

Double acting hand pump for single acting cylinder for fixing to tank

★★★★★ Includes Rubber Bellows and Relief Valve as standard

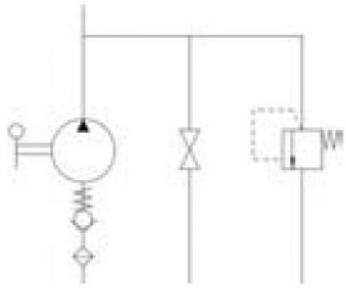

SEE PAGE 329 FOR LEVERS

SPECIFICATIONS

- Piston treated with Niploy
- Lever connection: Ø 27
- Standard colour: Black
- Mounting kit and seals included
- Pressure relief valve standard setting: 100 bar

RELIEF VALVE ADJUSTMENT

Unscrew dome cover and adjust screw inwards to increase pressure setting. Factory set at 100 bar.

EFFORT DIAGRAM

pin in D (distance between centers: 40 mm) PM 6 - PM 12
pin in E (distance between centers: 51 mm) PM 25 - PM 45

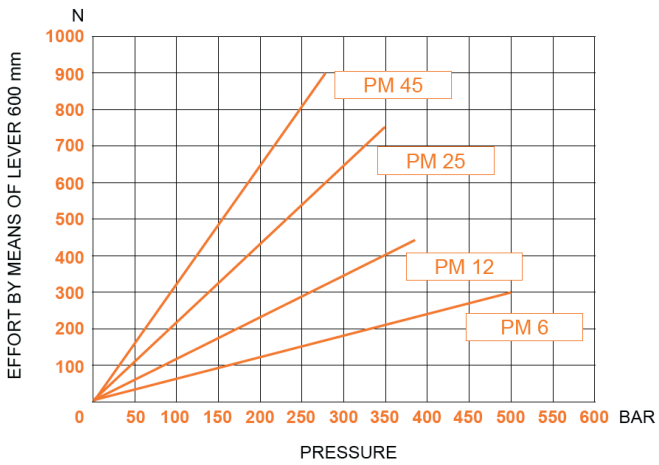

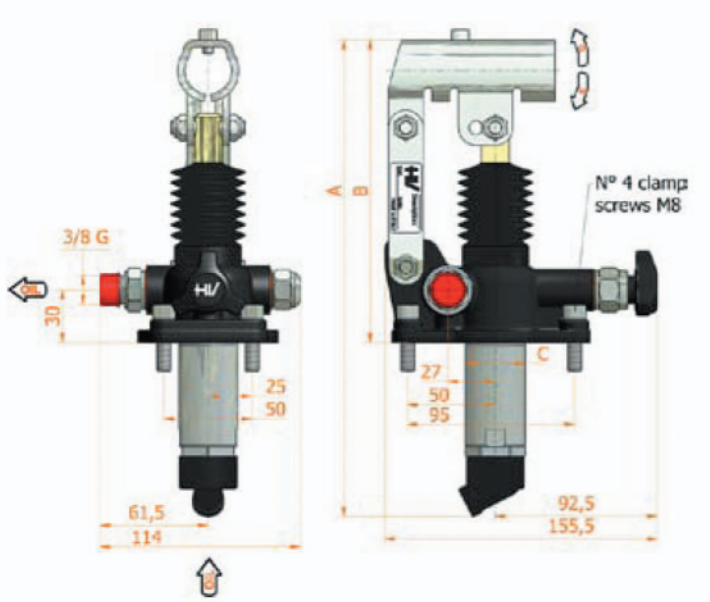

DISPLACEMENT cm³	A mm	B mm	C mm	D °	E °	ACTUAL DISPLACEMENT cm³	PRESSURE BAR WORK P.	PRESSURE BAR MAX	MASS KG	CODE WITH BELLOWS	PRICE
6	253	166	34	26	31	6.970	450	500	2.900	6049.0117	£156.55
12	253	166	34	26	31	12.095	320	380	2.900	6050.0117	£156.55
25	273	172	34	30	30	25.280	280	350	2.950	6051.0117	£160.37
45	283	172	40	45	33	44.532	220	280	3.00	6052.0117	£162.91

PMD 6-12-25-45 byB-s

With 4/3 flow divider closed centre

With pressure relief valve

Double acting hand pump for a double acting cylinder for fixing to tank

★★★★★
Includes Rubber Bellows and Relief Valve as standard

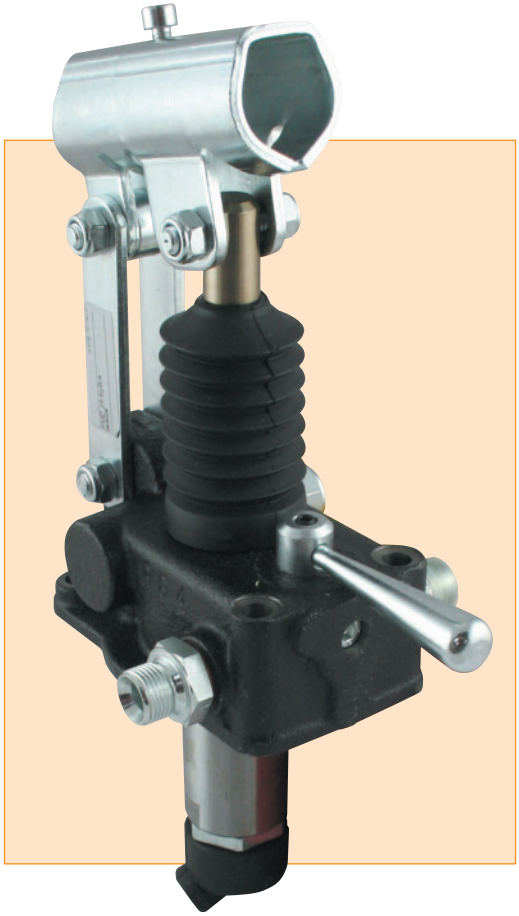

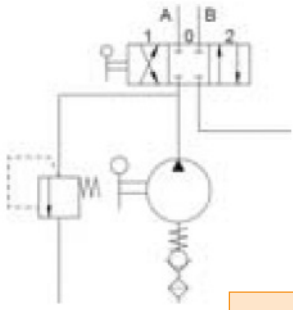

SEE PAGE 329 FOR LEVERS

SPECIFICATIONS

- Piston treated with Niploy
- Lever connection: Ø 27
- Standard colour: Black
- Mounting kit and seals included
- Pressure relief valve standard setting: 100 bar

RELIEF VALVE ADJUSTMENT

Unscrew dome cover and adjust screw inwards to increase pressure setting. Factory set at 100 bar.

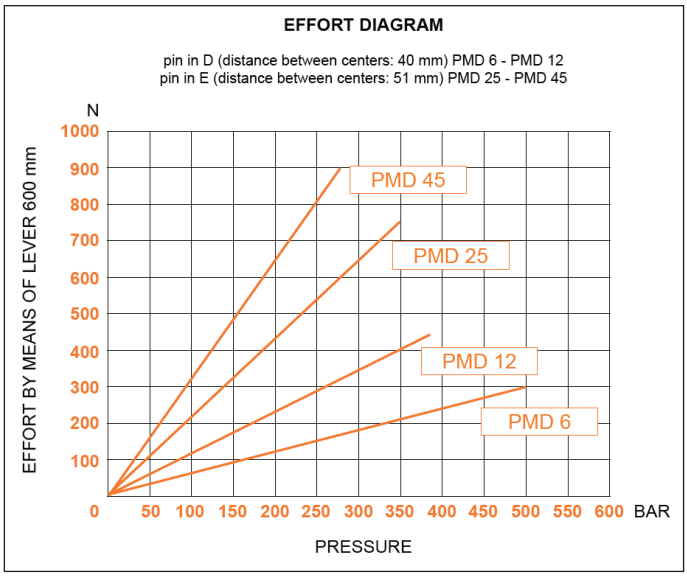

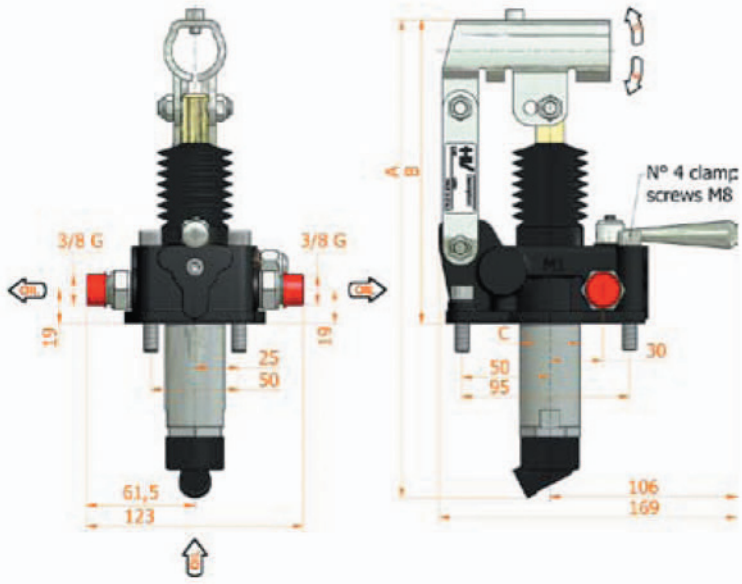

DISPLACEMENT cm³	A mm	B mm	C mm	D °	E °	ACTUAL DISPLACEMENT cm³	PRESSURE BAR WORK P.	PRESSURE BAR MAX	MASS KG	CODE WITH BELLOWS	PRICE
6	253	166	34	26	31	6.970	450	500	3.400	6054.0046	£179.46
12	253	166	34	26	31	12.095	320	380	3.400	6055.0046	£179.46
25	273	172	34	30	30	25.280	280	350	3.450	6056.0046	£179.46
45	283	172	40	45	33	44.532	220	280	3.500	6057.0046	£184.56

50% OFF ALL PRICES

PMDVB 6-12-25-45 byAB-s

With 4/3 flow divider

With dual pilot check valve

With brakes - with pressure relief valve

Double acting hand pump for a double acting cylinder for fixing to tank

★★★★★ Includes Rubber Bellows and Relief Valve as standard

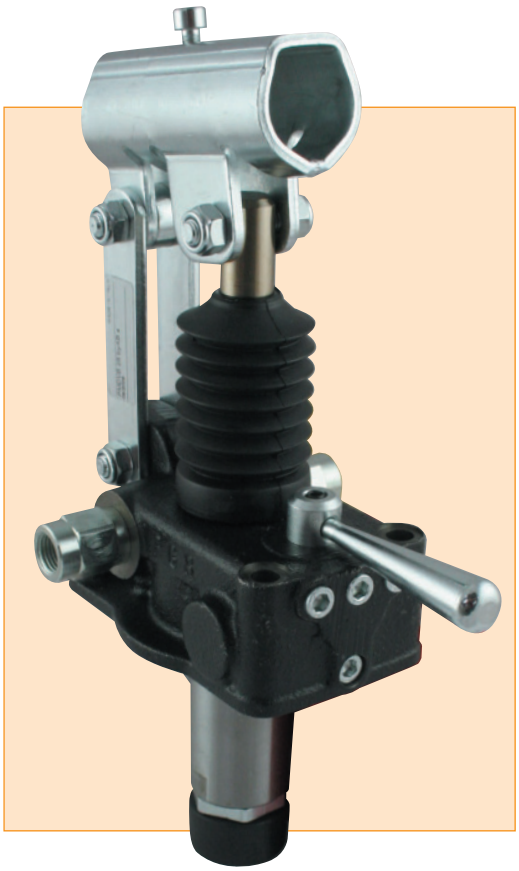

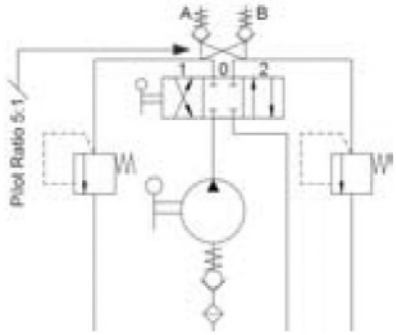

SEE PAGE 329 FOR LEVERS

SPECIFICATIONS

- Piston treated with Niploy
- Lever connection: Ø 27
- Standard colour: Black
- Mounting kit and seals included
- With hydraulic brakes to operate even with pressure less than 50 bar
- Pressure relief valve standard setting: 100 bar

EFFORT DIAGRAM

pin in D (distance between centers: 40 mm) PMDVB 6 - PMDVB 12
pin in E (distance between centers: 51 mm) PMDVB 25 - PMDVB 45

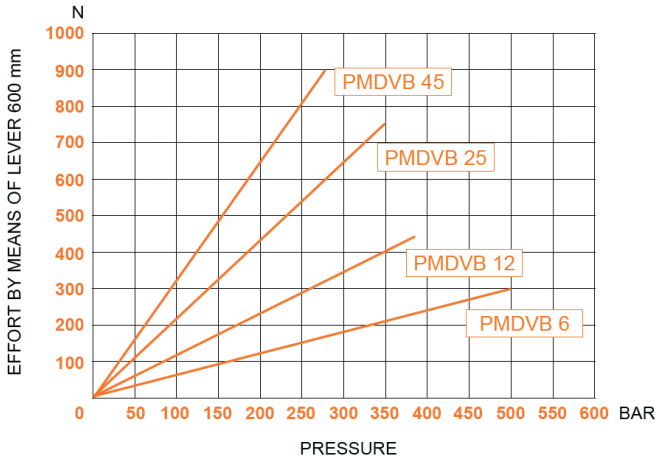

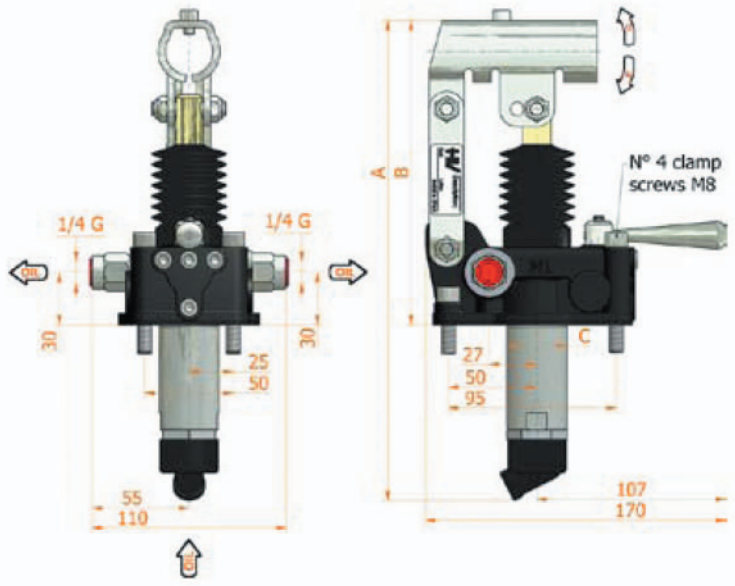

DISPLACEMENT cm³	A mm	B mm	C mm	D °	E °	ACTUAL DISPLACEMENT cm³	PRESSURE BAR WORK P.	PRESSURE BAR MAX	MASS KG	CODE WITH BELLOWS	PRICE
6	253	166	34	26	31	6.970	450	500	3.400	6059.0105	£238.00
12	253	166	34	26	31	12.095	320	380	3.400	6060.0105	£238.00
25	273	172	34	30	30	25.280	280	350	3.450	6061.0105	£238.00
45	283	172	40	45	33	44.532	220	280	3.500	6062.0105	£252.00

PMP 25 e

Without release hand knob

Single acting hand pump for a single acting cylinder

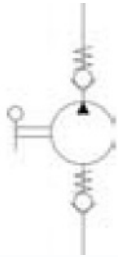

SPECIFICATIONS

- Piston treated with Niploy 30 micron to provide a higher resistance to salt spray corrosion
- Lever connection: Ø 27
- Support lever in stainless steel
- Aluminium anticorodal body

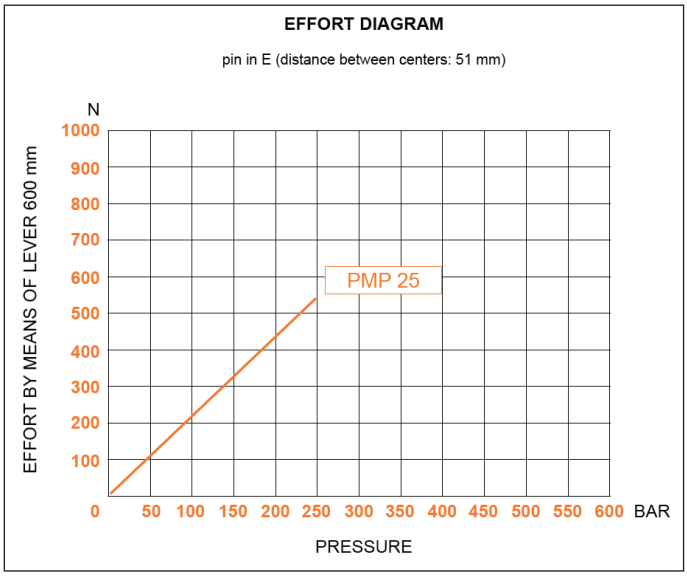

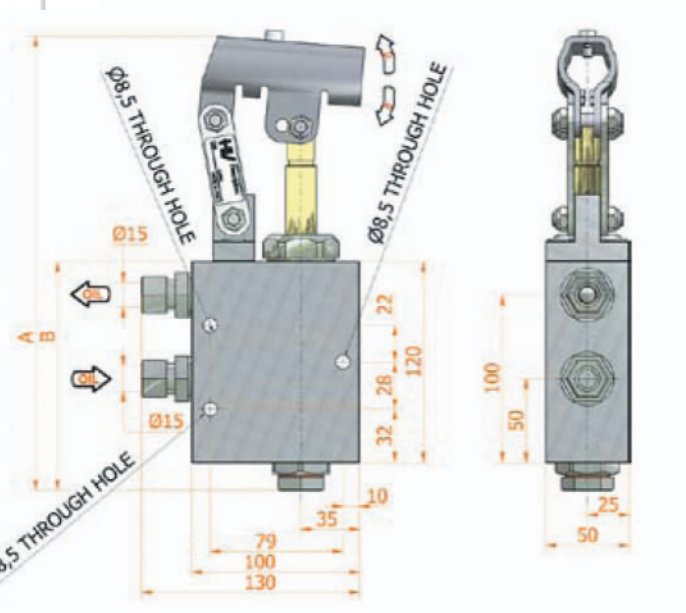

DISPLACEMENT cm³	A mm	B mm	D °	E °	ACTUAL DISPLACEMENT cm³	MAX PRESSURE BAR	MASS KG	CODE WITH BELLOWS	PRICE
25	270	136	26	29	24.285	280	3.00	6075.0001	£184.09

PPSE 15 byB

With release lever

With pressure relief valve

Single acting pump for a single acting cylinder

With cylindrical tank

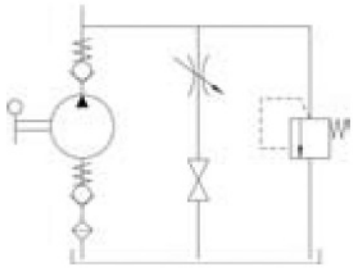

SPECIFICATIONS

- Piston treated with Niploy
- Standard colour: Blue
- Pressure relief valve standard setting: 200 bar

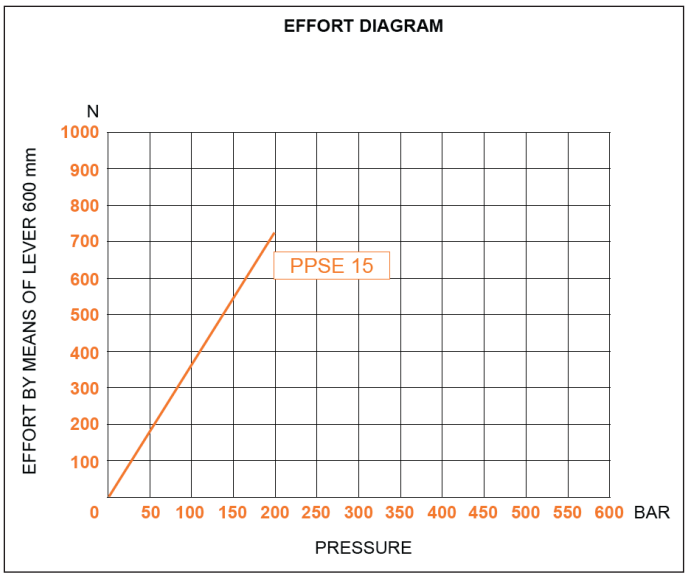

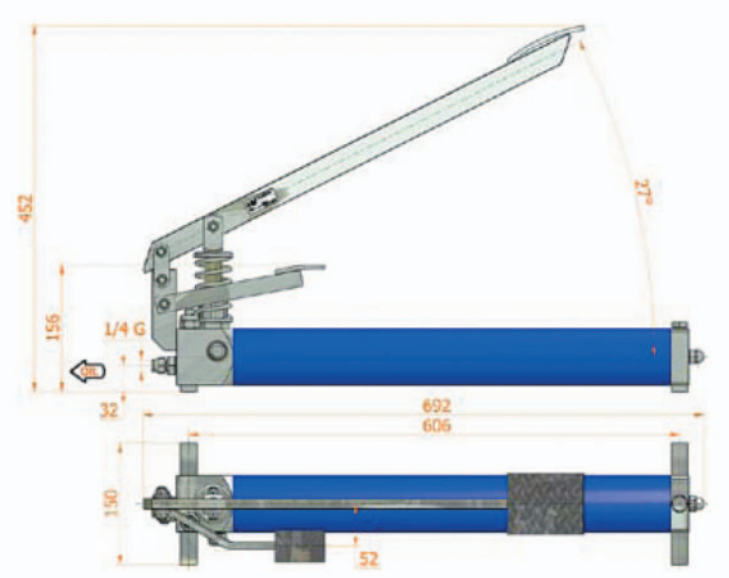

DISPLACEMENT cm³	ACTUAL DISPLACEMENT cm³	PRESSURE BAR		MASS KG	CODE WITH BELLOWS	PRICE
		WORK P.	MAX			
15	14.130	150	230	10.000	6090.0001	£334.74

50% OFF ALL PRICES

STRAIGHT LEVERS FOR HAND PUMPS

FLOWFIT

Straight lever

White zincate

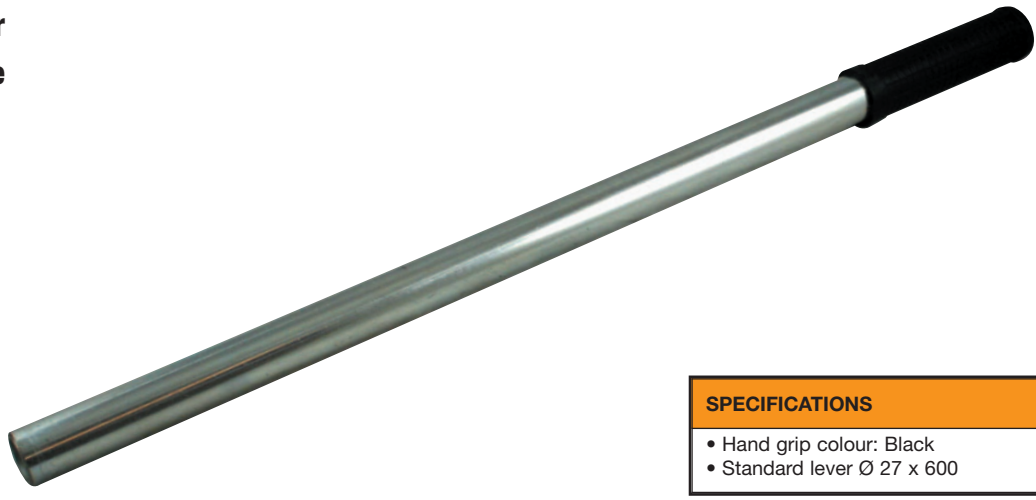

SPECIFICATIONS
• Hand grip colour: Black • Standard lever Ø 27 x 600

LEVER	OD OF LEVER mm	LENGTH OF LEVER mm	WEIGHT KG	LEVER FOR HAND PUMP	CODE	PRICE
L 20x500 zb-d	20	500	0.40	PM PMD PMDVB PMO PMP PMSE 20-30-40 PM2V 5-80	6800.0000	£13.36
L 207x330 zb-d	27	330	0.50	PM PMD PMDVB PMO PMP PMSE 20-30-40 PM2V 5-80	6800.0005	£13.90
L 27x400 zb-d	27	400	0.60	PM PMD PMDVB PMO PMP PMSE 20-30-40 PM2V 5-80	6800.0007	£13.90
L 27x600 zb-d	27	600	0.90	PM PMD PMDVB PMO PMP PMSE 20-30-40 PM2V 5-80	6800.0009	£13.90
L 27x850 zb-d	27	850	1.20	PM PMD PMDVB PMO PMP PMSE 20-30-40 PM2V 5-80	6800.0011	£19.33
L 207x1000 zb-d	27	1000	1.50	PM PMD PMDVB PMO PMP PMSE 20-30-40 PM2V 5-80	6800.0013	£23.18
L 27x1500 zb-d	27	1500	2.20	PM PMD PMDVB PMO PMP PMSE 20-30-40 PM2V 5-80	6800.0027	£37.53

FOLD LEVERS FOR HAND PUMPS

FLOWFIT

Fold lever

White zincate

SPECIFICATIONS
• Hand grip colour: Black

LEVER	A mm	B mm	C mm	S mm	L mm	WEIGHT KG	LEVER FOR HAND PUMP	CODE	PRICE
L 27x600 zb-d	140	100	31°	27	415	0.90	PM PMD PMDVB PMO PMP PMSE 20-30-40 PM2V 5-80	6800.0020	£23.16

STEEL OIL TANKS FOR HANDPUMPS

FLOWFIT

Painted steel oil tank for hand pumps

SPECIFICATIONS
• Standard colour: Black

CAPACITY LITRES	A mm	B mm	C mm	D mm	WEIGHT KG	SUCTION PIPE	CODE	PRICE
1	100	150	120	120	2.200	Ø10x85 mm	6500.0140	£53.20
2	100	150	185	120	3.000	Ø10x114 mm	6500.0141	£59.82
3	100	150	255	120	3.700	Ø10x180 mm	6500.0142	£63.38
5	175	175	200	195	5.300	Ø10x156 mm	6500.0143	£80.18
7	175	175	275	195	6.600	Ø10x215 mm	6500.0144	£87.82
10	175	175	380	195	8.300	Ø10x325 mm	6500.0145	£93.04
20	175	175	780	195	16.000	Ø10x720 mm	6500.0149	£259.19

CAPACITY Litres	A mm	B mm	C mm	D mm	MASS KG	CODE
1	100	150	120	120	2.2	6500.0140
2	100	150	185	120	3	6500.0141
2	150	150	105	170	2.4	6500.0151
3	100	150	255	120	3.7	6500.0142
3	150	150	156	170	3	6500.0152
5	150	150	245	170	3.1	6500.0153
5	175	175	200	195	5.3	6500.0143
7	150	150	340	170	5.3	6500.0154
7	175	175	275	195	6.6	6500.0144
10	150	150	485	170	7.1	6500.0155
10	175	175	380	195	8.3	6500.0145
13	175	175	485	195	10.8	6500.0147
15	175	175	600	195	12.1	6500.0148
20	175	175	780	195	16	6500.0149

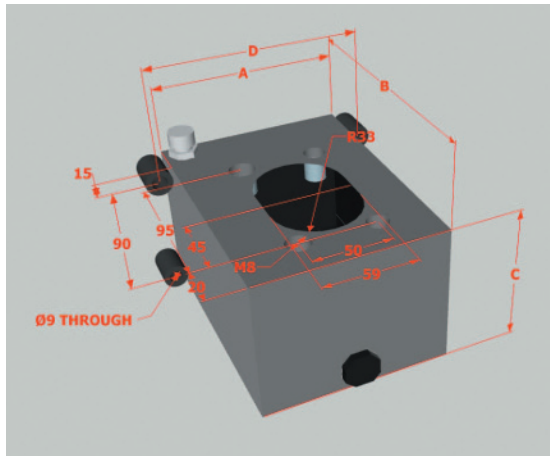

SINGLE ACTING HANDPUMP ASSEMBLIES

6cm3 SINGLE ACTING HANDPUMP ASSEMBLIES 332
12cm3 SINGLE ACTING HANDPUMP ASSEMBLIES 334
25cm3 SINGLE ACTING HANDPUMP ASSEMBLIES 336
45cm3 SINGLE ACTING HANDPUMP ASSEMBLIES 338

Flowfit hand pump assemblies consist of a single acting handpump, steel tank and 600mm lever with all variations shown. The Flowfit range of hand pumps have been developed and manufactured for high performance and reliability. They are used in many different sectors such as transport, industry and agriculture.

OIL

Use only ISO 6743/4 (DIN 51524) hydraulic mineral oil.

VISCOSITY

Viscosity must be according to ISO 3448 (DIN 51519) standards.
Minimum viscosity: ISO VG 15
Maximum viscosity: ISO VG 100
Advised viscosity: ISO VG 46

FILTRATION CONTAMINATION

The main cause for failure in most hydraulic installations is due to excessive fluid contamination.
Advised filtration: 50-80 microns
Contamination class 18/14 ISO 4406 (9 NAS 1638)

FLOWFIT

6cm³ SINGLE ACTING HANDPUMP ASSEMBLIES

6cm³ SINGLE ACTING HANDPUMP, 1L TANK & 600mm LEVER

All hand pumps are fully interchangeable with other leading Italian manufacturers and are supplied with rubber protection for the piston, pressure relief valve, check valve to lock a single acting cylinder and release knob.

Displacements, tank size and pressures as shown in the table below.

PART NO.	DISPLACEMENT CM³	TANK SIZE LITRES	MAX WORKING PRESSURE BAR	MAX PRESSURE BAR	PRICE £
ZZ000936	6	1	450	500	£224.43

FURTHER INFORMATION AND TECHNICAL HANDPUMP PDF IS AVAILABLE TO DOWNLOAD FROM OUR WEBSITE AT www.flowfitonline.com

6cm³ SINGLE ACTING HANDPUMP, 2L TANK & 600mm LEVER

All hand pumps are fully interchangeable with other leading Italian manufacturers and are supplied with rubber protection for the piston, pressure relief valve, check valve to lock a single acting cylinder and release knob.

Displacements, tank size and pressures as shown in the table below.

PART NO.	DISPLACEMENT CM³	TANK SIZE LITRES	MAX WORKING PRESSURE BAR	MAX PRESSURE BAR	PRICE £
ZZ000937	6	2	450	500	£230.29

FURTHER INFORMATION AND TECHNICAL HANDPUMP PDF IS AVAILABLE TO DOWNLOAD FROM OUR WEBSITE AT www.flowfitonline.com

6cm³ SINGLE ACTING HANDPUMP, 3L TANK & 600mm LEVER

All hand pumps are fully interchangeable with other leading Italian manufacturers and are supplied with rubber protection for the piston, pressure relief valve, check valve to lock a single acting cylinder and release knob.

Displacements, tank size and pressures as shown in the table below.

PART NO.	DISPLACEMENT CM³	TANK SIZE LITRES	MAX WORKING PRESSURE BAR	MAX PRESSURE BAR	PRICE £
ZZ000938	6	3	450	500	£233.86

FURTHER INFORMATION AND TECHNICAL HANDPUMP PDF IS AVAILABLE TO DOWNLOAD FROM OUR WEBSITE AT www.flowfitonline.com

6cm³ SINGLE ACTING HANDPUMP, 5L TANK & 600mm LEVER

All hand pumps are fully interchangeable with other leading Italian manufacturers and are supplied with rubber protection for the piston, pressure relief valve, check valve to lock a single acting cylinder and release knob.

Displacements, tank size and pressures as shown in the table below.

PART NO.	DISPLACEMENT CM³	TANK SIZE LITRES	MAX WORKING PRESSURE BAR	MAX PRESSURE BAR	PRICE £
ZZ000939	6	5	450	500	£250.64

FURTHER INFORMATION AND TECHNICAL HANDPUMP PDF IS AVAILABLE TO DOWNLOAD FROM OUR WEBSITE AT www.flowfitonline.com

6cm³ SINGLE ACTING HANDPUMP, 7L TANK & 600mm LEVER

All hand pumps are fully interchangeable with other leading Italian manufacturers and are supplied with rubber protection for the piston, pressure relief valve, check valve to lock a single acting cylinder and release knob.

Displacements, tank size and pressures as shown in the table below.

PART NO.	DISPLACEMENT CM³	TANK SIZE LITRES	MAX WORKING PRESSURE BAR	MAX PRESSURE BAR	PRICE £
ZZ000940	6	7	450	500	£258.29

FURTHER INFORMATION AND TECHNICAL HANDPUMP PDF IS AVAILABLE TO DOWNLOAD FROM OUR WEBSITE AT www.flowfitonline.com

6cm³ SINGLE ACTING HANDPUMP, 10L TANK & 600mm LEVER

All hand pumps are fully interchangeable with other leading Italian manufacturers and are supplied with rubber protection for the piston, pressure relief valve, check valve to lock a single acting cylinder and release knob.

Displacements, tank size and pressures as shown in the table below.

PART NO.	DISPLACEMENT CM³	TANK SIZE LITRES	MAX WORKING PRESSURE BAR	MAX PRESSURE BAR	PRICE £
ZZ000941	6	10	450	500	£263.51

FURTHER INFORMATION AND TECHNICAL HANDPUMP PDF IS AVAILABLE TO DOWNLOAD FROM OUR WEBSITE AT www.flowfitonline.com

12cm³ SINGLE ACTING HANDPUMP ASSEMBLIES

12cm³ SINGLE ACTING HANDPUMP, 1L TANK & 600mm LEVER

All hand pumps are fully interchangeable with other leading Italian manufacturers and are supplied with rubber protection for the piston, pressure relief valve, check valve to lock a single acting cylinder and release knob.

Displacements, tank size and pressures as shown in the table below.

PART NO.	DISPLACEMENT CM³	TANK SIZE LITRES	MAX WORKING PRESSURE BAR	MAX PRESSURE BAR	PRICE £
ZZ000942	12	1	320	380	£224.43

FURTHER INFORMATION AND TECHNICAL HANDPUMP PDF IS AVAILABLE TO DOWNLOAD FROM OUR WEBSITE AT www.flowfitonline.com

12cm³ SINGLE ACTING HANDPUMP, 2L TANK & 600mm LEVER

All hand pumps are fully interchangeable with other leading Italian manufacturers and are supplied with rubber protection for the piston, pressure relief valve, check valve to lock a single acting cylinder and release knob.

Displacements, tank size and pressures as shown in the table below.

PART NO.	DISPLACEMENT CM³	TANK SIZE LITRES	MAX WORKING PRESSURE BAR	MAX PRESSURE BAR	PRICE £
ZZ000943	12	2	320	380	£230.29

FURTHER INFORMATION AND TECHNICAL HANDPUMP PDF IS AVAILABLE TO DOWNLOAD FROM OUR WEBSITE AT www.flowfitonline.com

12cm³ SINGLE ACTING HANDPUMP, 3L TANK & 600mm LEVER

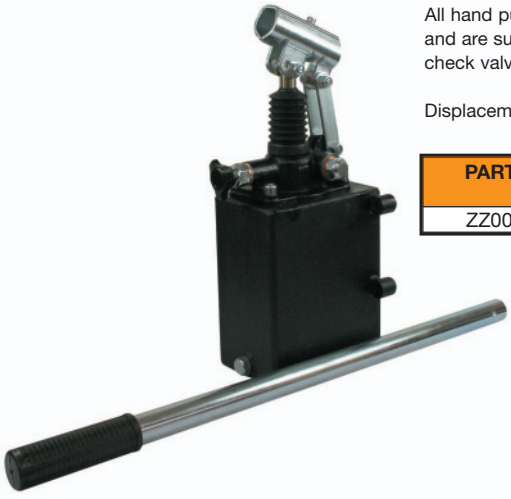

All hand pumps are fully interchangeable with other leading Italian manufacturers and are supplied with rubber protection for the piston, pressure relief valve, check valve to lock a single acting cylinder and release knob.

Displacements, tank size and pressures as shown in the table below.

PART NO.	DISPLACEMENT CM³	TANK SIZE LITRES	MAX WORKING PRESSURE BAR	MAX PRESSURE BAR	PRICE £
ZZ000944	12	3	320	380	£233.86

FURTHER INFORMATION AND TECHNICAL HANDPUMP PDF IS AVAILABLE TO DOWNLOAD FROM OUR WEBSITE AT www.flowfitonline.com

12cm³ SINGLE ACTING HANDPUMP, 5L TANK & 600mm LEVER

All hand pumps are fully interchangeable with other leading Italian manufacturers and are supplied with rubber protection for the piston, pressure relief valve, check valve to lock a single acting cylinder and release knob.

Displacements, tank size and pressures as shown in the table below.

PART NO.	DISPLACEMENT CM³	TANK SIZE LITRES	MAX WORKING PRESSURE BAR	MAX PRESSURE BAR	PRICE £
ZZ000945	12	5	320	380	£250.65

FURTHER INFORMATION AND TECHNICAL HANDPUMP PDF IS AVAILABLE TO DOWNLOAD FROM OUR WEBSITE AT www.flowfitonline.com

12cm³ SINGLE ACTING HANDPUMP, 7L TANK & 600mm LEVER

All hand pumps are fully interchangeable with other leading Italian manufacturers and are supplied with rubber protection for the piston, pressure relief valve, check valve to lock a single acting cylinder and release knob.

Displacements, tank size and pressures as shown in the table below.

PART NO.	DISPLACEMENT CM³	TANK SIZE LITRES	MAX WORKING PRESSURE BAR	MAX PRESSURE BAR	PRICE £
ZZ000946	12	7	320	380	£258.29

FURTHER INFORMATION AND TECHNICAL HANDPUMP PDF IS AVAILABLE TO DOWNLOAD FROM OUR WEBSITE AT www.flowfitonline.com

12cm³ SINGLE ACTING HANDPUMP, 10L TANK & 600mm LEVER

All hand pumps are fully interchangeable with other leading Italian manufacturers and are supplied with rubber protection for the piston, pressure relief valve, check valve to lock a single acting cylinder and release knob.

Displacements, tank size and pressures as shown in the table below.

PART NO.	DISPLACEMENT CM³	TANK SIZE LITRES	MAX WORKING PRESSURE BAR	MAX PRESSURE BAR	PRICE £
ZZ000947	12	10	320	380	£263.51

FURTHER INFORMATION AND TECHNICAL HANDPUMP PDF IS AVAILABLE TO DOWNLOAD FROM OUR WEBSITE AT www.flowfitonline.com

25cm³ SINGLE ACTING HANDPUMP ASSEMBLIES

25cm³ SINGLE ACTING HANDPUMP, 1L TANK & 600mm LEVER

All hand pumps are fully interchangeable with other leading Italian manufacturers and are supplied with rubber protection for the piston, pressure relief valve, check valve to lock a single acting cylinder and release knob.

Displacements, tank size and pressures as shown in the table below.

PART NO.	DISPLACEMENT CM³	TANK SIZE LITRES	MAX WORKING PRESSURE BAR	MAX PRESSURE BAR	PRICE £
ZZ000948	25	1	280	350	£215.33

FURTHER INFORMATION AND TECHNICAL HANDPUMP PDF IS AVAILABLE TO DOWNLOAD FROM OUR WEBSITE AT www.flowfitonline.com

25cm³ SINGLE ACTING HANDPUMP, 2L TANK & 600mm LEVER

All hand pumps are fully interchangeable with other leading Italian manufacturers and are supplied with rubber protection for the piston, pressure relief valve, check valve to lock a single acting cylinder and release knob.

Displacements, tank size and pressures as shown in the table below.

PART NO.	DISPLACEMENT CM³	TANK SIZE LITRES	MAX WORKING PRESSURE BAR	MAX PRESSURE BAR	PRICE £
ZZ000949	25	2	280	350	£234.10

FURTHER INFORMATION AND TECHNICAL HANDPUMP PDF IS AVAILABLE TO DOWNLOAD FROM OUR WEBSITE AT www.flowfitonline.com

25cm³ SINGLE ACTING HANDPUMP, 3L TANK & 600mm LEVER

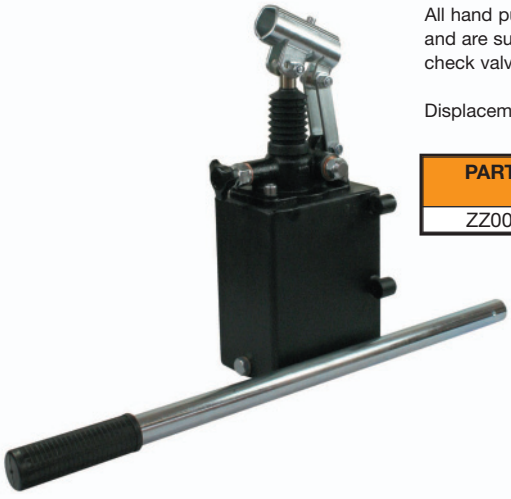

All hand pumps are fully interchangeable with other leading Italian manufacturers and are supplied with rubber protection for the piston, pressure relief valve, check valve to lock a single acting cylinder and release knob.

Displacements, tank size and pressures as shown in the table below.

PART NO.	DISPLACEMENT CM³	TANK SIZE LITRES	MAX WORKING PRESSURE BAR	MAX PRESSURE BAR	PRICE £
ZZ000950	25	3	280	350	£237.68

FURTHER INFORMATION AND TECHNICAL HANDPUMP PDF IS AVAILABLE TO DOWNLOAD FROM OUR WEBSITE AT www.flowfitonline.com

25cm³ SINGLE ACTING HANDPUMP, 5L TANK & 600mm LEVER

All hand pumps are fully interchangeable with other leading Italian manufacturers and are supplied with rubber protection for the piston, pressure relief valve, check valve to lock a single acting cylinder and release knob.

Displacements, tank size and pressures as shown in the table below.

PART NO.	DISPLACEMENT CM³	TANK SIZE LITRES	MAX WORKING PRESSURE BAR	MAX PRESSURE BAR	PRICE £
ZZ000951	25	5	280	350	£254.40

FURTHER INFORMATION AND TECHNICAL HANDPUMP PDF IS AVAILABLE TO DOWNLOAD FROM OUR WEBSITE AT www.flowfitonline.com

25cm³ SINGLE ACTING HANDPUMP, 7L TANK & 600mm LEVER

All hand pumps are fully interchangeable with other leading Italian manufacturers and are supplied with rubber protection for the piston, pressure relief valve, check valve to lock a single acting cylinder and release knob.

Displacements, tank size and pressures as shown in the table below.

PART NO.	DISPLACEMENT CM³	TANK SIZE LITRES	MAX WORKING PRESSURE BAR	MAX PRESSURE BAR	PRICE £
ZZ000952	25	7	280	350	£262.11

FURTHER INFORMATION AND TECHNICAL HANDPUMP PDF IS AVAILABLE TO DOWNLOAD FROM OUR WEBSITE AT www.flowfitonline.com

25cm³ SINGLE ACTING HANDPUMP, 10L TANK & 600mm LEVER

All hand pumps are fully interchangeable with other leading Italian manufacturers and are supplied with rubber protection for the piston, pressure relief valve, check valve to lock a single acting cylinder and release knob.

Displacements, tank size and pressures as shown in the table below.

PART NO.	DISPLACEMENT CM³	TANK SIZE LITRES	MAX WORKING PRESSURE BAR	MAX PRESSURE BAR	PRICE £
ZZ000953	25	10	280	350	£252.19

FURTHER INFORMATION AND TECHNICAL HANDPUMP PDF IS AVAILABLE TO DOWNLOAD FROM OUR WEBSITE AT www.flowfitonline.com

45cm³ SINGLE ACTING HANDPUMP ASSEMBLIES

45cm³ SINGLE ACTING HANDPUMP, 1L TANK & 600mm LEVER

All hand pumps are fully interchangeable with other leading Italian manufacturers and are supplied with rubber protection for the piston, pressure relief valve, check valve to lock a single acting cylinder and release knob.

Displacements, tank size and pressures as shown in the table below.

PART NO.	DISPLACEMENT CM³	TANK SIZE LITRES	MAX WORKING PRESSURE BAR	MAX PRESSURE BAR	PRICE £
ZZ000954	45	1	220	280	£230.80

FURTHER INFORMATION AND TECHNICAL HANDPUMP PDF IS AVAILABLE TO DOWNLOAD FROM OUR WEBSITE AT www.flowfitonline.com

45cm³ SINGLE ACTING HANDPUMP, 2L TANK & 600mm LEVER

All hand pumps are fully interchangeable with other leading Italian manufacturers and are supplied with rubber protection for the piston, pressure relief valve, check valve to lock a single acting cylinder and release knob.

Displacements, tank size and pressures as shown in the table below.

PART NO.	DISPLACEMENT CM³	TANK SIZE LITRES	MAX WORKING PRESSURE BAR	MAX PRESSURE BAR	PRICE £
ZZ000955	45	2	220	280	£236.66

FURTHER INFORMATION AND TECHNICAL HANDPUMP PDF IS AVAILABLE TO DOWNLOAD FROM OUR WEBSITE AT www.flowfitonline.com

45cm³ SINGLE ACTING HANDPUMP, 3L TANK & 600mm LEVER

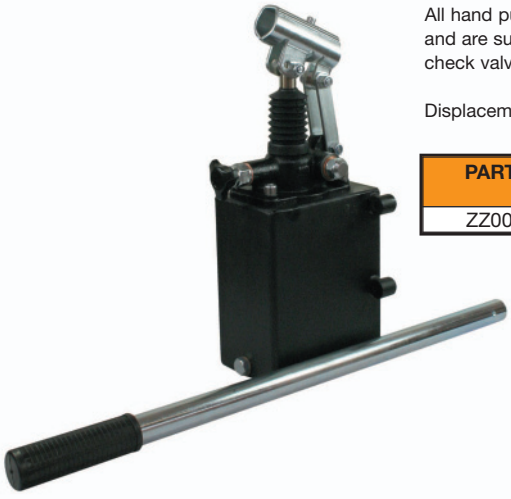

All hand pumps are fully interchangeable with other leading Italian manufacturers and are supplied with rubber protection for the piston, pressure relief valve, check valve to lock a single acting cylinder and release knob.

Displacements, tank size and pressures as shown in the table below.

PART NO.	DISPLACEMENT CM³	TANK SIZE LITRES	MAX WORKING PRESSURE BAR	MAX PRESSURE BAR	PRICE £
ZZ000956	45	3	220	280	£240.22

FURTHER INFORMATION AND TECHNICAL HANDPUMP PDF IS AVAILABLE TO DOWNLOAD FROM OUR WEBSITE AT www.flowfitonline.com

45cm³ SINGLE ACTING HANDPUMP, 5L TANK & 600mm LEVER

All hand pumps are fully interchangeable with other leading Italian manufacturers and are supplied with rubber protection for the piston, pressure relief valve, check valve to lock a single acting cylinder and release knob.

Displacements, tank size and pressures as shown in the table below.

PART NO.	DISPLACEMENT CM³	TANK SIZE LITRES	MAX WORKING PRESSURE BAR	MAX PRESSURE BAR	PRICE £
ZZ000957	45	5	220	280	£257.01

FURTHER INFORMATION AND TECHNICAL HANDPUMP PDF IS AVAILABLE TO DOWNLOAD FROM OUR WEBSITE AT www.flowfitonline.com

45cm³ SINGLE ACTING HANDPUMP, 7L TANK & 600mm LEVER

All hand pumps are fully interchangeable with other leading Italian manufacturers and are supplied with rubber protection for the piston, pressure relief valve, check valve to lock a single acting cylinder and release knob.

Displacements, tank size and pressures as shown in the table below.

PART NO.	DISPLACEMENT CM³	TANK SIZE LITRES	MAX WORKING PRESSURE BAR	MAX PRESSURE BAR	PRICE £
ZZ000958	45	7	220	280	£264.65

FURTHER INFORMATION AND TECHNICAL HANDPUMP PDF IS AVAILABLE TO DOWNLOAD FROM OUR WEBSITE AT www.flowfitonline.com

45cm³ SINGLE ACTING HANDPUMP, 10L TANK & 600mm LEVER

All hand pumps are fully interchangeable with other leading Italian manufacturers and are supplied with rubber protection for the piston, pressure relief valve, check valve to lock a single acting cylinder and release knob.

Displacements, tank size and pressures as shown in the table below.

PART NO.	DISPLACEMENT CM³	TANK SIZE LITRES	MAX WORKING PRESSURE BAR	MAX PRESSURE BAR	PRICE £
ZZ000959	45	10	220	280	£269.88

FURTHER INFORMATION AND TECHNICAL HANDPUMP PDF IS AVAILABLE TO DOWNLOAD FROM OUR WEBSITE AT www.flowfitonline.com

DOUBLE ACTING HANDPUMP ASSEMBLIES

6cm3 DOUBLE ACTING HANDPUMP ASSEMBLIES.....341
12cm3 DOUBLE ACTING HANDPUMP ASSEMBLIES.....343
25cm3 DOUBLE ACTING HANDPUMP ASSEMBLIES.....345
45cm3 DOUBLE ACTING HANDPUMP ASSEMBLIES.....347

Flowfit hand pump assemblies consist of a double acting handpump, steel tank and 600mm lever with all variations shown below. The Flowfit range of hand pumps have been developed and manufactured for high performance and reliability. They are used in many different sectors such as transport, industry and agriculture.

OIL

Use only ISO 6743/4 (DIN 51524) hydraulic mineral oil.

VISCOSITY

Viscosity must be according to ISO 3448 (DIN 51519) standards.
Minimum viscosity: ISO VG 15
Maximum viscosity: ISO VG 100
Advised viscosity: ISO VG 46

FILTRATION CONTAMINATION

The main cause for failure in most hydraulic installations is due to excessive fluid contamination.
Advised filtration: 50-80 microns
Contamination class 18/14 ISO 4406 (9 NAS 1638)

FLOWFIT

50% OFF ALL PRICES

6cm³ DOUBLE ACTING HANDPUMP ASSEMBLIES

6cm³ DOUBLE ACTING HANDPUMP, 1L TANK & 600mm LEVER

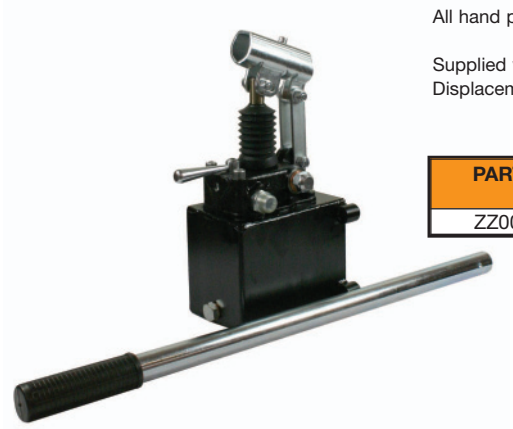

All hand pumps are fully interchangeable with other leading Italian manufacturers.

Supplied with rubber protection for the piston, pressure relief valve and 4/3 flow divider closed centre. Displacements, tank size and pressures as shown in the table below.

PART NO.	DISPLACEMENT CM³	TANK SIZE LITRES	MAX WORKING PRESSURE BAR	MAX PRESSURE BAR	PRICE £
ZZ000960	6	1	450	500	£247.33

FURTHER INFORMATION AND TECHNICAL HANDPUMP PDF IS AVAILABLE TO DOWNLOAD FROM OUR WEBSITE AT www.flowfitonline.com

6cm³ DOUBLE ACTING HANDPUMP, 2L TANK & 600mm LEVER

All hand pumps are fully interchangeable with other leading Italian manufacturers.

Supplied with rubber protection for the piston, pressure relief valve and 4/3 flow divider closed centre. Displacements, tank size and pressures as shown in the table below.

PART NO.	DISPLACEMENT CM³	TANK SIZE LITRES	MAX WORKING PRESSURE BAR	MAX PRESSURE BAR	PRICE £
ZZ000961	6	2	450	500	£253.19

FURTHER INFORMATION AND TECHNICAL HANDPUMP PDF IS AVAILABLE TO DOWNLOAD FROM OUR WEBSITE AT www.flowfitonline.com

6cm³ DOUBLE ACTING HANDPUMP, 3L TANK & 600mm LEVER

All hand pumps are fully interchangeable with other leading Italian manufacturers.

Supplied with rubber protection for the piston, pressure relief valve and 4/3 flow divider closed centre. Displacements, tank size and pressures as shown in the table below.

PART NO.	DISPLACEMENT CM³	TANK SIZE LITRES	MAX WORKING PRESSURE BAR	MAX PRESSURE BAR	PRICE £
ZZ000962	6	3	450	500	£256.76

FURTHER INFORMATION AND TECHNICAL HANDPUMP PDF IS AVAILABLE TO DOWNLOAD FROM OUR WEBSITE AT www.flowfitonline.com

6cm³ DOUBLE ACTING HANDPUMP, 5L TANK & 600mm LEVER

All hand pumps are fully interchangeable with other leading Italian manufacturers.

Supplied with rubber protection for the piston, pressure relief valve and 4/3 flow divider closed centre. Displacements, tank size and pressures as shown in the table below.

PART NO.	DISPLACEMENT CM³	TANK SIZE LITRES	MAX WORKING PRESSURE BAR	MAX PRESSURE BAR	PRICE £
ZZ000963	6	5	450	500	£273.56

FURTHER INFORMATION AND TECHNICAL HANDPUMP PDF IS AVAILABLE TO DOWNLOAD FROM OUR WEBSITE AT www.flowfitonline.com

6cm³ DOUBLE ACTING HANDPUMP, 7L TANK & 600mm LEVER

All hand pumps are fully interchangeable with other leading Italian manufacturers.

Supplied with rubber protection for the piston, pressure relief valve and 4/3 flow divider closed centre. Displacements, tank size and pressures as shown in the table below.

PART NO.	DISPLACEMENT CM³	TANK SIZE LITRES	MAX WORKING PRESSURE BAR	MAX PRESSURE BAR	PRICE £
ZZ000964	6	7	450	500	£281.20

FURTHER INFORMATION AND TECHNICAL HANDPUMP PDF IS AVAILABLE TO DOWNLOAD FROM OUR WEBSITE AT www.flowfitonline.com

6cm³ DOUBLE ACTING HANDPUMP, 10L TANK & 600mm LEVER

All hand pumps are fully interchangeable with other leading Italian manufacturers.

Supplied with rubber protection for the piston, pressure relief valve and 4/3 flow divider closed centre. Displacements, tank size and pressures as shown in the table below.

PART NO.	DISPLACEMENT CM³	TANK SIZE LITRES	MAX WORKING PRESSURE BAR	MAX PRESSURE BAR	PRICE £
ZZ000965	6	10	450	500	£286.42

FURTHER INFORMATION AND TECHNICAL HANDPUMP PDF IS AVAILABLE TO DOWNLOAD FROM OUR WEBSITE AT www.flowfitonline.com

12cm³ DOUBLE ACTING HANDPUMP ASSEMBLIES

12cm³ DOUBLE ACTING HANDPUMP, 1L TANK & 600mm LEVER

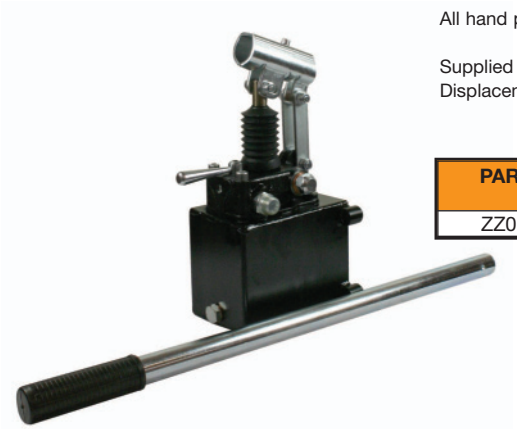

All hand pumps are fully interchangeable with other leading Italian manufacturers.

Supplied with rubber protection for the piston, pressure relief valve and 4/3 flow divider closed centre. Displacements, tank size and pressures as shown in the table below.

PART NO.	DISPLACEMENT CM³	TANK SIZE LITRES	MAX WORKING PRESSURE BAR	MAX PRESSURE BAR	PRICE £
ZZ000966	12	1	320	380	£247.35

FURTHER INFORMATION AND TECHNICAL HANDPUMP PDF IS AVAILABLE TO DOWNLOAD FROM OUR WEBSITE AT www.flowfitonline.com

12cm³ DOUBLE ACTING HANDPUMP, 2L TANK & 600mm LEVER

All hand pumps are fully interchangeable with other leading Italian manufacturers.

Supplied with rubber protection for the piston, pressure relief valve and 4/3 flow divider closed centre. Displacements, tank size and pressures as shown in the table below.

PART NO.	DISPLACEMENT CM³	TANK SIZE LITRES	MAX WORKING PRESSURE BAR	MAX PRESSURE BAR	PRICE £
ZZ000967	12	2	320	380	£253.19

FURTHER INFORMATION AND TECHNICAL HANDPUMP PDF IS AVAILABLE TO DOWNLOAD FROM OUR WEBSITE AT www.flowfitonline.com

12cm³ DOUBLE ACTING HANDPUMP, 3L TANK & 600mm LEVER

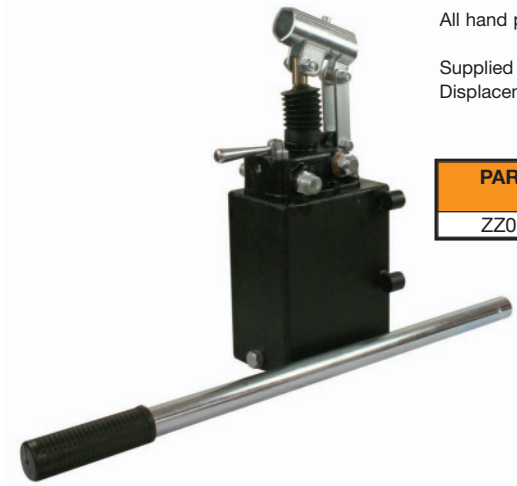

All hand pumps are fully interchangeable with other leading Italian manufacturers.

Supplied with rubber protection for the piston, pressure relief valve and 4/3 flow divider closed centre. Displacements, tank size and pressures as shown in the table below.

PART NO.	DISPLACEMENT CM³	TANK SIZE LITRES	MAX WORKING PRESSURE BAR	MAX PRESSURE BAR	PRICE £
ZZ000968	12	3	320	380	£256.76

FURTHER INFORMATION AND TECHNICAL HANDPUMP PDF IS AVAILABLE TO DOWNLOAD FROM OUR WEBSITE AT www.flowfitonline.com

12cm³ DOUBLE ACTING HANDPUMP, 5L TANK & 600mm LEVER

All hand pumps are fully interchangeable with other leading Italian manufacturers.

Supplied with rubber protection for the piston, pressure relief valve and 4/3 flow divider closed centre. Displacements, tank size and pressures as shown in the table below.

PART NO.	DISPLACEMENT CM³	TANK SIZE LITRES	MAX WORKING PRESSURE BAR	MAX PRESSURE BAR	PRICE £
ZZ000969	12	5	320	380	£273.56

FURTHER INFORMATION AND TECHNICAL HANDPUMP PDF IS AVAILABLE TO DOWNLOAD FROM OUR WEBSITE AT www.flowfitonline.com

12cm³ DOUBLE ACTING HANDPUMP, 7L TANK & 600mm LEVER

All hand pumps are fully interchangeable with other leading Italian manufacturers.

Supplied with rubber protection for the piston, pressure relief valve and 4/3 flow divider closed centre. Displacements, tank size and pressures as shown in the table below.

PART NO.	DISPLACEMENT CM³	TANK SIZE LITRES	MAX WORKING PRESSURE BAR	MAX PRESSURE BAR	PRICE £
ZZ000970	12	7	320	380	£281.20

FURTHER INFORMATION AND TECHNICAL HANDPUMP PDF IS AVAILABLE TO DOWNLOAD FROM OUR WEBSITE AT www.flowfitonline.com

12cm³ DOUBLE ACTING HANDPUMP, 10L TANK & 600mm LEVER

All hand pumps are fully interchangeable with other leading Italian manufacturers.

Supplied with rubber protection for the piston, pressure relief valve and 4/3 flow divider closed centre. Displacements, tank size and pressures as shown in the table below.

PART NO.	DISPLACEMENT CM³	TANK SIZE LITRES	MAX WORKING PRESSURE BAR	MAX PRESSURE BAR	PRICE £
ZZ000971	12	10	320	380	£286.42

FURTHER INFORMATION AND TECHNICAL HANDPUMP PDF IS AVAILABLE TO DOWNLOAD FROM OUR WEBSITE AT www.flowfitonline.com

25cm³ DOUBLE ACTING HANDPUMP ASSEMBLIES

25cm³ DOUBLE ACTING HANDPUMP, 1L TANK & 600mm LEVER

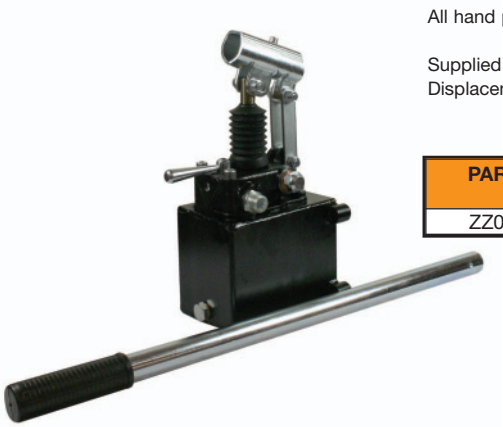

All hand pumps are fully interchangeable with other leading Italian manufacturers.

Supplied with rubber protection for the piston, pressure relief valve and 4/3 flow divider closed centre. Displacements, tank size and pressures as shown in the table below.

PART NO.	DISPLACEMENT CM³	TANK SIZE LITRES	MAX WORKING PRESSURE BAR	MAX PRESSURE BAR	PRICE £
ZZ000972	25	1	280	350	£247.33

FURTHER INFORMATION AND TECHNICAL HANDPUMP PDF IS AVAILABLE TO DOWNLOAD FROM OUR WEBSITE AT www.flowfitonline.com

25cm³ DOUBLE ACTING HANDPUMP, 2L TANK & 600mm LEVER

All hand pumps are fully interchangeable with other leading Italian manufacturers.

Supplied with rubber protection for the piston, pressure relief valve and 4/3 flow divider closed centre. Displacements, tank size and pressures as shown in the table below.

PART NO.	DISPLACEMENT CM³	TANK SIZE LITRES	MAX WORKING PRESSURE BAR	MAX PRESSURE BAR	PRICE £
ZZ000973	25	2	280	350	£253.19

FURTHER INFORMATION AND TECHNICAL HANDPUMP PDF IS AVAILABLE TO DOWNLOAD FROM OUR WEBSITE AT www.flowfitonline.com

25cm³ DOUBLE ACTING HANDPUMP, 3L TANK & 600mm LEVER

All hand pumps are fully interchangeable with other leading Italian manufacturers.

Supplied with rubber protection for the piston, pressure relief valve and 4/3 flow divider closed centre. Displacements, tank size and pressures as shown in the table below.

PART NO.	DISPLACEMENT CM³	TANK SIZE LITRES	MAX WORKING PRESSURE BAR	MAX PRESSURE BAR	PRICE £
ZZ000974	25	3	280	350	£256.76

FURTHER INFORMATION AND TECHNICAL HANDPUMP PDF IS AVAILABLE TO DOWNLOAD FROM OUR WEBSITE AT www.flowfitonline.com

25cm³ DOUBLE ACTING HANDPUMP, 5L TANK & 600mm LEVER

All hand pumps are fully interchangeable with other leading Italian manufacturers.

Supplied with rubber protection for the piston, pressure relief valve and 4/3 flow divider closed centre. Displacements, tank size and pressures as shown in the table below.

PART NO.	DISPLACEMENT CM³	TANK SIZE LITRES	MAX WORKING PRESSURE BAR	MAX PRESSURE BAR	PRICE £
ZZ000975	25	5	280	350	£273.56

FURTHER INFORMATION AND TECHNICAL HANDPUMP PDF IS AVAILABLE TO DOWNLOAD FROM OUR WEBSITE AT www.flowfitonline.com

25cm³ DOUBLE ACTING HANDPUMP, 7L TANK & 600mm LEVER

All hand pumps are fully interchangeable with other leading Italian manufacturers.

Supplied with rubber protection for the piston, pressure relief valve and 4/3 flow divider closed centre. Displacements, tank size and pressures as shown in the table below.

PART NO.	DISPLACEMENT CM³	TANK SIZE LITRES	MAX WORKING PRESSURE BAR	MAX PRESSURE BAR	PRICE £
ZZ000976	25	7	280	350	£281.08

FURTHER INFORMATION AND TECHNICAL HANDPUMP PDF IS AVAILABLE TO DOWNLOAD FROM OUR WEBSITE AT www.flowfitonline.com

25cm³ DOUBLE ACTING HANDPUMP, 10L TANK & 600mm LEVER

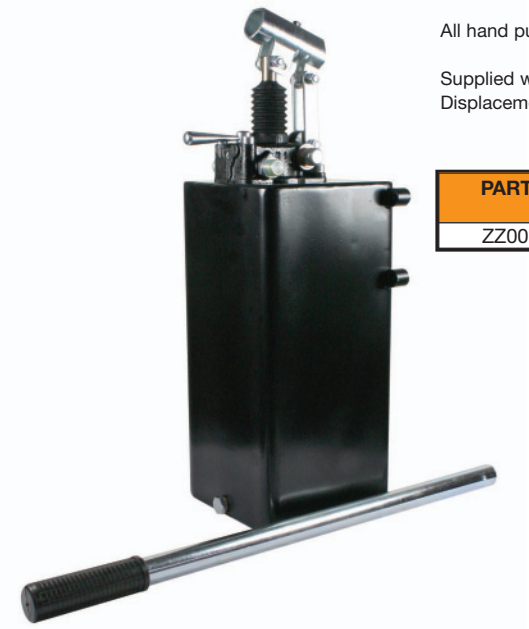

All hand pumps are fully interchangeable with other leading Italian manufacturers.

Supplied with rubber protection for the piston, pressure relief valve and 4/3 flow divider closed centre. Displacements, tank size and pressures as shown in the table below.

PART NO.	DISPLACEMENT CM³	TANK SIZE LITRES	MAX WORKING PRESSURE BAR	MAX PRESSURE BAR	PRICE £
ZZ000977	25	10	280	350	£286.42

FURTHER INFORMATION AND TECHNICAL HANDPUMP PDF IS AVAILABLE TO DOWNLOAD FROM OUR WEBSITE AT www.flowfitonline.com

45cm³ DOUBLE ACTING HANDPUMP ASSEMBLIES

45cm³ DOUBLE ACTING HANDPUMP, 1L TANK & 600mm LEVER

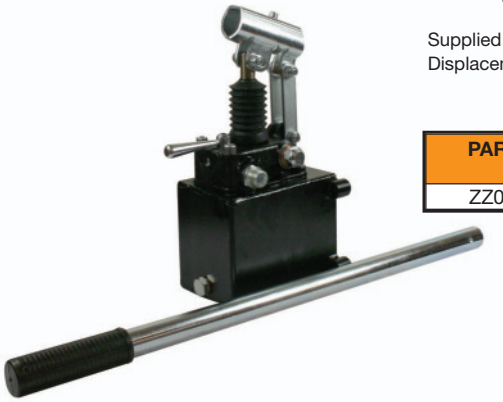

All hand pumps are fully interchangeable with other leading Italian manufacturers.

Supplied with rubber protection for the piston, pressure relief valve and 4/3 flow divider closed centre. Displacements, tank size and pressures as shown in the table below.

PART NO.	DISPLACEMENT CM³	TANK SIZE LITRES	MAX WORKING PRESSURE BAR	MAX PRESSURE BAR	PRICE £
ZZ000978	45	1	220	280	£252.43

FURTHER INFORMATION AND TECHNICAL HANDPUMP PDF IS AVAILABLE TO DOWNLOAD FROM OUR WEBSITE AT www.flowfitonline.com

45cm³ DOUBLE ACTING HANDPUMP, 2L TANK & 600mm LEVER

All hand pumps are fully interchangeable with other leading Italian manufacturers.

Supplied with rubber protection for the piston, pressure relief valve and 4/3 flow divider closed centre. Displacements, tank size and pressures as shown in the table below.

PART NO.	DISPLACEMENT CM³	TANK SIZE LITRES	MAX WORKING PRESSURE BAR	MAX PRESSURE BAR	PRICE £
ZZ000979	45	2	220	280	£258.29

FURTHER INFORMATION AND TECHNICAL HANDPUMP PDF IS AVAILABLE TO DOWNLOAD FROM OUR WEBSITE AT www.flowfitonline.com

45cm³ DOUBLE ACTING HANDPUMP, 3L TANK & 600mm LEVER

All hand pumps are fully interchangeable with other leading Italian manufacturers.

Supplied with rubber protection for the piston, pressure relief valve and 4/3 flow divider closed centre. Displacements, tank size and pressures as shown in the table below.

PART NO.	DISPLACEMENT CM³	TANK SIZE LITRES	MAX WORKING PRESSURE BAR	MAX PRESSURE BAR	PRICE £
ZZ000980	45	3	220	280	£261.86

FURTHER INFORMATION AND TECHNICAL HANDPUMP PDF IS AVAILABLE TO DOWNLOAD FROM OUR WEBSITE AT www.flowfitonline.com

45cm³ DOUBLE ACTING HANDPUMP, 5L TANK & 600mm LEVER

All hand pumps are fully interchangeable with other leading Italian manufacturers.

Supplied with rubber protection for the piston, pressure relief valve and 4/3 flow divider closed centre. Displacements, tank size and pressures as shown in the table below.

PART NO.	DISPLACEMENT CM³	TANK SIZE LITRES	MAX WORKING PRESSURE BAR	MAX PRESSURE BAR	PRICE £
ZZ000981	45	5	220	280	£278.65

FURTHER INFORMATION AND TECHNICAL HANDPUMP PDF IS AVAILABLE TO DOWNLOAD FROM OUR WEBSITE AT www.flowfitonline.com

45cm³ DOUBLE ACTING HANDPUMP, 7L TANK & 600mm LEVER

All hand pumps are fully interchangeable with other leading Italian manufacturers.

Supplied with rubber protection for the piston, pressure relief valve and 4/3 flowdivider closed centre. Displacements, tank size and pressures as shown in the table below.

PART NO.	DISPLACEMENT CM³	TANK SIZE LITRES	MAX WORKING PRESSURE BAR	MAX PRESSURE BAR	PRICE £
ZZ000982	45	7	220	280	£286.30

FURTHER INFORMATION AND TECHNICAL HANDPUMP PDF IS AVAILABLE TO DOWNLOAD FROM OUR WEBSITE AT www.flowfitonline.com

45cm³ DOUBLE ACTING HANDPUMP, 10L TANK & 600mm LEVER

All hand pumps are fully interchangeable with other leading Italian manufacturers.

Supplied with rubber protection for the piston, pressure relief valve and 4/3 flow divider closed centre. Displacements, tank size and pressures as shown in the table below.

PART NO.	DISPLACEMENT CM³	TANK SIZE LITRES	MAX WORKING PRESSURE BAR	MAX PRESSURE BAR	PRICE £
ZZ000983	45	10	220	280	£291.50

FURTHER INFORMATION AND TECHNICAL HANDPUMP PDF IS AVAILABLE TO DOWNLOAD FROM OUR WEBSITE AT www.flowfitonline.com

HANDPUMPS AND POWERPACK TRAILER KITS

SINGLE ACTING HANDPUMP AND CYLINDER KITS 350
DOUBLE ACTING HANDPUMP AND CYLINDER KITS 355
12VDC SINGLE ACTING HYDRAULIC TRAILER KITS 360
24VDC SINGLE ACTING HYDRAULIC TRAILER KITS 365

Handpump and powerpack trailer kits consist of either a hydraulic power pack or a hydraulic handpump with a hydraulic ram, hose and adaptors which when assembled will lift the tonnage and move the distance as shown in the tables.

FLOWFIT

SINGLE ACTING HANDPUMP AND CYLINDER KITS

ZZ000778 - SINGLE ACTING HANDPUMP AND CYLINDER KITS

This kit will allow you to lift up to 2.5 tonnes a total distance of 400mm and consists of 25cm³ single acting handpump, hydraulic cylinder, 1 litre tank, 600mm lever along with hose and adaptors.

For more technical information on the single acting handpumps and rams please refer to the following pdf links:

HANDPUMPS
http://www.flowfitonline.com/acatalog/pdfs/Section6%20Handpumps-pdf.zip

CYLINDERS
http://www.flowfitonline.com/acatalog/pdfs/Section12%20Cylinders-pdf.zip

PART NO.	HANDPUMP DISPLACEMENT CM³	LEVER MM	CYLINDER STROKE MM	LIFT TONNES	MAX PRESSURE BAR	HYDRAULIC HOSE M	PRICE
ZZ000778	25	600	400	2.5	200	3	£336.57

ZZ000779 - SINGLE ACTING HANDPUMP AND CYLINDER KITS

This kit will allow you to lift up to 2.5 tonnes a total distance of 600mm and consists of 25cm³ single acting handpump, hydraulic cylinder, 1 litre tank, 600mm lever along with hose and adaptors.

For more technical information on the single acting handpumps and rams please refer to the following pdf links:

HANDPUMPS
http://www.flowfitonline.com/acatalog/pdfs/Section6%20Handpumps-pdf.zip

CYLINDERS
http://www.flowfitonline.com/acatalog/pdfs/Section12%20Cylinders-pdf.zip

PART NO.	HANDPUMP DISPLACEMENT CM³	LEVER MM	CYLINDER STROKE MM	LIFT TONNES	MAX PRESSURE BAR	HYDRAULIC HOSE M	PRICE
ZZ000779	25	600	600	2.5	200	3	£351.45

ZZ000780 - SINGLE ACTING HANDPUMP AND CYLINDER KITS

This kit will allow you to lift up to 2.5 tonnes a total distance of 700mm and consists of 25cm³ single acting handpump, hydraulic cylinder, 2 litre tank, 600mm lever along with hose and adaptors.

For more technical information on the single acting handpumps and rams please refer to the following pdf links:

HANDPUMPS
http://www.flowfitonline.com/acatalog/pdfs/Section6%20Handpumps-pdf.zip

CYLINDERS
http://www.flowfitonline.com/acatalog/pdfs/Section12%20Cylinders-pdf.zip

PART NO.	HANDPUMP DISPLACEMENT CM³	LEVER MM	CYLINDER STROKE MM	LIFT TONNES	MAX PRESSURE BAR	HYDRAULIC HOSE M	PRICE
ZZ000780	25	600	700	2.5	200	3	£364.05

SINGLE ACTING HANDPUMP AND CYLINDER KITS

ZZ000781 - SINGLE ACTING HANDPUMP AND CYLINDER KITS

This kit will allow you to lift up to 3.9 tonnes a total distance of 400mm and consists of 25cm³ single acting handpump, hydraulic cylinder, 2 litre tank, 600mm lever along with hose and adaptors.

For more technical information on the single acting handpumps and rams please refer to the following pdf links:

HANDPUMPS
http://www.flowfitonline.com/acatalog/pdfs/Section6%20Handpumps-pdf.zip

CYLINDERS
http://www.flowfitonline.com/acatalog/pdfs/Section12%20Cylinders-pdf.zip

PART NO.	HANDPUMP DISPLACEMENT CM³	LEVER MM	CYLINDER STROKE MM	LIFT TONNES	MAX PRESSURE BAR	HYDRAULIC HOSE M	PRICE
ZZ000781	25	600	400	3.9	200	3	£367.48

ZZ000782 - SINGLE ACTING HANDPUMP AND CYLINDER KITS

This kit will allow you to lift up to 3.9 tonnes a total distance of 600mm and consists of 25cm³ single acting handpump, hydraulic cylinder, 2 litre tank, 600mm lever along with hose and adaptors.

For more technical information on the single acting handpumps and rams please refer to the following pdf links:

HANDPUMPS
http://www.flowfitonline.com/acatalog/pdfs/Section6%20Handpumps-pdf.zip

CYLINDERS
http://www.flowfitonline.com/acatalog/pdfs/Section12%20Cylinders-pdf.zip

PART NO.	HANDPUMP DISPLACEMENT CM³	LEVER MM	CYLINDER STROKE MM	LIFT TONNES	MAX PRESSURE BAR	HYDRAULIC HOSE M	PRICE
ZZ000782	25	600	600	3.9	200	3	£385.80

ZZ000783 - SINGLE ACTING HANDPUMP AND CYLINDER KITS

This kit will allow you to lift up to 3.9 tonnes a total distance of 700mm and consists of 25cm³ single acting handpump, hydraulic cylinder, 3 litre tank, 600mm lever along with hose and adaptors.

For more technical information on the single acting handpumps and rams please refer to the following pdf links:

HANDPUMPS
http://www.flowfitonline.com/acatalog/pdfs/Section6%20Handpumps-pdf.zip

CYLINDERS
http://www.flowfitonline.com/acatalog/pdfs/Section12%20Cylinders-pdf.zip

PART NO.	HANDPUMP DISPLACEMENT CM³	LEVER MM	CYLINDER STROKE MM	LIFT TONNES	MAX PRESSURE BAR	HYDRAULIC HOSE M	PRICE
ZZ000783	25	600	700	3.9	200	3	£397.25

SINGLE ACTING HANDPUMP AND CYLINDER KITS

ZZ000784 - SINGLE ACTING HANDPUMP AND CYLINDER KITS

This kit will allow you to lift up to 5.6 tonnes a total distance of 400mm and consists of 25cm³ single acting handpump, hydraulic cylinder, 2 litre tank, 600mm lever along with hose and adaptors.

For more technical information on the single acting handpumps and rams please refer to the following pdf links:

HANDPUMPS
http://www.flowfitonline.com/acatalog/pdfs/Section6%20Handpumps-pdf.zip

CYLINDERS
http://www.flowfitonline.com/acatalog/pdfs/Section12%20Cylinders-pdf.zip

PART NO.	HANDPUMP DISPLACEMENT CM³	LEVER MM	CYLINDER STROKE MM	LIFT TONNES	MAX PRESSURE BAR	HYDRAULIC HOSE M	PRICE
ZZ000784	25	600	400	5.6	200	3	£384.65

ZZ000785 - SINGLE ACTING HANDPUMP AND CYLINDER KITS

This kit will allow you to lift up to 5.6 tonnes a total distance of 600mm and consists of 25cm³ single acting handpump, hydraulic cylinder, 3 litre tank, 600mm lever along with hose and adaptors.

For more technical information on the single acting handpumps and rams please refer to the following pdf links:

HANDPUMPS
http://www.flowfitonline.com/acatalog/pdfs/Section6%20Handpumps-pdf.zip

CYLINDERS
http://www.flowfitonline.com/acatalog/pdfs/Section12%20Cylinders-pdf.zip

PART NO.	HANDPUMP DISPLACEMENT CM³	LEVER MM	CYLINDER STROKE MM	LIFT TONNES	MAX PRESSURE BAR	HYDRAULIC HOSE M	PRICE
ZZ000785	25	600	600	5.6	200	3	£402.97

ZZ000786 - SINGLE ACTING HANDPUMP AND CYLINDER KITS

This kit will allow you to lift up to 5.6 tonnes a total distance of 700mm and consists of 25cm³ single acting handpump, hydraulic cylinder, 3 litre tank, 600mm lever along with hose and adaptors.

For more technical information on the single acting handpumps and rams please refer to the following pdf links:

HANDPUMPS
http://www.flowfitonline.com/acatalog/pdfs/Section6%20Handpumps-pdf.zip

CYLINDERS
http://www.flowfitonline.com/acatalog/pdfs/Section12%20Cylinders-pdf.zip

PART NO.	HANDPUMP DISPLACEMENT CM³	LEVER MM	CYLINDER STROKE MM	LIFT TONNES	MAX PRESSURE BAR	HYDRAULIC HOSE M	PRICE
ZZ000786	25	600	700	5.6	200	3	£415.56

SINGLE ACTING HANDPUMP AND CYLINDER KITS

ZZ000787 - SINGLE ACTING HANDPUMP AND CYLINDER KITS

This kit will allow you to lift up to 7.7 tonnes a total distance of 400mm and consists of 25cm³ single acting handpump, hydraulic cylinder, 3 litre tank, 600mm lever along with hose and adaptors.

For more technical information on the single acting handpumps and rams please refer to the following pdf links:

HANDPUMPS
http://www.flowfitonline.com/acatalog/pdfs/Section6%20Handpumps-pdf.zip

CYLINDERS
http://www.flowfitonline.com/acatalog/pdfs/Section12%20Cylinders-pdf.zip

PART NO.	HANDPUMP DISPLACEMENT CM³	LEVER MM	CYLINDER STROKE MM	LIFT TONNES	MAX PRESSURE BAR	HYDRAULIC HOSE M	PRICE
ZZ000787	25	600	400	7.7	200	3	£430.44

ZZ000788 - SINGLE ACTING HANDPUMP AND CYLINDER KITS

This kit will allow you to lift up to 7.7 tonnes a total distance of 600mm and consists of 25cm³ single acting handpump, hydraulic cylinder, 3 litre tank, 600mm lever along with hose and adaptors.

For more technical information on the single acting handpumps and rams please refer to the following pdf links:

HANDPUMPS
http://www.flowfitonline.com/acatalog/pdfs/Section6%20Handpumps-pdf.zip

CYLINDERS
http://www.flowfitonline.com/acatalog/pdfs/Section12%20Cylinders-pdf.zip

PART NO.	HANDPUMP DISPLACEMENT CM³	LEVER MM	CYLINDER STROKE MM	LIFT TONNES	MAX PRESSURE BAR	HYDRAULIC HOSE M	PRICE
ZZ000788	25	600	600	7.7	200	3	£457.92

ZZ000789 - SINGLE ACTING HANDPUMP AND CYLINDER KITS

This kit will allow you to lift up to 7.7 tonnes a total distance of 700mm and consists of 25cm³ single acting handpump, hydraulic cylinder, 5 litre tank, 600mm lever along with hose and adaptors.

For more technical information on the single acting handpumps and rams please refer to the following pdf links:

HANDPUMPS
http://www.flowfitonline.com/acatalog/pdfs/Section6%20Handpumps-pdf.zip

CYLINDERS
http://www.flowfitonline.com/acatalog/pdfs/Section12%20Cylinders-pdf.zip

PART NO.	HANDPUMP DISPLACEMENT CM³	LEVER MM	CYLINDER STROKE MM	LIFT TONNES	MAX PRESSURE BAR	HYDRAULIC HOSE M	PRICE
ZZ000789	25	600	700	7.7	200	3	£487.68

SINGLE ACTING HANDPUMP AND CYLINDER KITS

ZZ000790 - SINGLE ACTING HANDPUMP AND CYLINDER KITS

This kit will allow you to lift up to 10.0 tonnes a total distance of 400mm and consists of 25cm³ single acting handpump, hydraulic cylinder, 3 litre tank, 600mm lever along with hose and adaptors.

For more technical information on the single acting handpumps and rams please refer to the following pdf links:

HANDPUMPS
http://www.flowfitonline.com/acatalog/pdfs/Section6%20Handpumps-pdf.zip

CYLINDERS
http://www.flowfitonline.com/acatalog/pdfs/Section12%20Cylinders-pdf.zip

PART NO.	HANDPUMP DISPLACEMENT CM³	LEVER MM	CYLINDER STROKE MM	LIFT TONNES	MAX PRESSURE BAR	HYDRAULIC HOSE M	PRICE
ZZ000790	25	600	400	10	200	3	£473.95

ZZ000791 - SINGLE ACTING HANDPUMP AND CYLINDER KITS

This kit will allow you to lift up to 10.0 tonnes a total distance of 600mm and consists of 25cm³ single acting handpump, hydraulic cylinder, 5 litre tank, 600mm lever along with hose and adaptors.

For more technical information on the single acting handpumps and rams please refer to the following pdf links:

HANDPUMPS
http://www.flowfitonline.com/acatalog/pdfs/Section6%20Handpumps-pdf.zip

CYLINDERS
http://www.flowfitonline.com/acatalog/pdfs/Section12%20Cylinders-pdf.zip

PART NO.	HANDPUMP DISPLACEMENT CM³	LEVER MM	CYLINDER STROKE MM	LIFT TONNES	MAX PRESSURE BAR	HYDRAULIC HOSE M	PRICE
ZZ000791	25	600	600	10	200	3	£520.88

ZZ000792 - SINGLE ACTING HANDPUMP AND CYLINDER KITS

This kit will allow you to lift up to 10.0 tonnes a total distance of 700mm and consists of 25cm3 single acting handpump, hydraulic cylinder, 5 litre tank, 600mm lever along with hose and adaptors.

For more technical information on the single acting handpumps and rams please refer to the following pdf links:

HANDPUMPS
http://www.flowfitonline.com/acatalog/pdfs/Section6%20Handpumps-pdf.zip

CYLINDERS
http://www.flowfitonline.com/acatalog/pdfs/Section12%20Cylinders-pdf.zip

PART NO.	HANDPUMP DISPLACEMENT CM³	LEVER MM	CYLINDER STROKE MM	LIFT TONNES	MAX PRESSURE BAR	HYDRAULIC HOSE M	PRICE
ZZ000792	25	600	700	10	200	3	£536.91

DOUBLE ACTING HANDPUMP AND CYLINDER KITS

ZZ000804 - DOUBLE ACTING HANDPUMP AND CYLINDER KITS

This kit will allow you to lift up to 2.5 tonnes a total distance of 400mm and consists of 25cm³ double acting handpump, hydraulic cylinder, 1 litre tank, 600mm lever along with hose and adaptors.

For more technical information on the double acting handpumps and rams please refer to the following pdf links:

HANDPUMPS
http://www.flowfitonline.com/acatalog/pdfs/Section6%20Handpumps-pdf.zip

CYLINDERS
http://www.flowfitonline.com/acatalog/pdfs/Section12%20Cylinders-pdf.zip

PART NO.	HANDPUMP DISPLACEMENT CM³	LEVER MM	CYLINDER STROKE MM	LIFT TONNES	MAX PRESSURE BAR	HYDRAULIC HOSE M	PRICE
ZZ000804	25	600	400	2.5	200	3m x 2	£337.72

ZZ000805 - DOUBLE ACTING HANDPUMP AND CYLINDER KITS

This kit will allow you to lift up to 2.5 tonnes a total distance of 600mm and consists of 25cm³ double acting handpump, hydraulic cylinder, 1 litre tank, 600mm lever along with hose and adaptors.

For more technical information on the double acting handpumps and rams please refer to the following pdf links:

HANDPUMPS
http://www.flowfitonline.com/acatalog/pdfs/Section6%20Handpumps-pdf.zip

CYLINDERS
http://www.flowfitonline.com/acatalog/pdfs/Section12%20Cylinders-pdf.zip

PART NO.	HANDPUMP DISPLACEMENT CM³	LEVER MM	CYLINDER STROKE MM	LIFT TONNES	MAX PRESSURE BAR	HYDRAULIC HOSE M	PRICE
ZZ000805	25	600	600	2.5	200	3m x 2	£351.45

ZZ000806 - DOUBLE ACTING HANDPUMP AND CYLINDER KITS

This kit will allow you to lift up to 2.5 tonnes a total distance of 700mm and consists of 25cm³ double acting handpump, hydraulic cylinder, 2 litre tank, 600mm lever along with hose and adaptors.

For more technical information on the double acting handpumps and rams please refer to the following pdf links:

HANDPUMPS
http://www.flowfitonline.com/acatalog/pdfs/Section6%20Handpumps-pdf.zip

CYLINDERS
http://www.flowfitonline.com/acatalog/pdfs/Section12%20Cylinders-pdf.zip

PART NO.	HANDPUMP DISPLACEMENT CM³	LEVER MM	CYLINDER STROKE MM	LIFT TONNES	MAX PRESSURE BAR	HYDRAULIC HOSE M	PRICE
ZZ000806	25	600	700	2.5	200	3m x 2	£364.05

DOUBLE ACTING HANDPUMP AND CYLINDER KITS

ZZ000807 - DOUBLE ACTING HANDPUMP AND CYLINDER KITS

This kit will allow you to lift up to 3.9 tonnes a total distance of 400mm and consists of 25cm³ double acting handpump, hydraulic cylinder, 2 litre tank, 600mm lever along with hose and adaptors.

For more technical information on the double acting handpumps and rams please refer to the following pdf links:

HANDPUMPS
http://www.flowfitonline.com/acatalog/pdfs/Section6%20Handpumps-pdf.zip

CYLINDERS
http://www.flowfitonline.com/acatalog/pdfs/Section12%20Cylinders-pdf.zip

PART NO.	HANDPUMP DISPLACEMENT CM³	LEVER MM	CYLINDER STROKE MM	LIFT TONNES	MAX PRESSURE BAR	HYDRAULIC HOSE M	PRICE
ZZ000807	25	600	400	3.9	200	3m x 2	£367.23

ZZ000808 - DOUBLE ACTING HANDPUMP AND CYLINDER KITS

This kit will allow you to lift up to 3.9 tonnes a total distance of 600mm and consists of 25cm³ double acting handpump, hydraulic cylinder, 2 litre tank, 600mm lever along with hose and adaptors.

For more technical information on the double acting handpumps and rams please refer to the following pdf links:

HANDPUMPS
http://www.flowfitonline.com/acatalog/pdfs/Section6%20Handpumps-pdf.zip

CYLINDERS
http://www.flowfitonline.com/acatalog/pdfs/Section12%20Cylinders-pdf.zip

PART NO.	HANDPUMP DISPLACEMENT CM³	LEVER MM	CYLINDER STROKE MM	LIFT TONNES	MAX PRESSURE BAR	HYDRAULIC HOSE M	PRICE
ZZ000808	25	600	600	3.9	200	3m x 2	£417.60

ZZ000809 - DOUBLE ACTING HANDPUMP AND CYLINDER KIT

This kit will allow you to lift up to 3.9 tonnes a total distance of 700mm and consists of 25cm³ double acting handpump, hydraulic cylinder, 3 litre tank, 600mm lever along with hose and adaptors.

For more technical information on the double acting handpumps and rams please refer to the following pdf links:

HANDPUMPS
http://www.flowfitonline.com/acatalog/pdfs/Section6%20Handpumps-pdf.zip

CYLINDERS
http://www.flowfitonline.com/acatalog/pdfs/Section12%20Cylinders-pdf.zip

PART NO.	HANDPUMP DISPLACEMENT CM³	LEVER MM	CYLINDER STROKE MM	LIFT TONNES	MAX PRESSURE BAR	HYDRAULIC HOSE M	PRICE
ZZ000809	25	600	700	3.9	200	3m x 2	£398.39

DOUBLE ACTING HANDPUMP AND CYLINDER KITS

ZZ000810 - DOUBLE ACTING HANDPUMP AND CYLINDER KIT

This kit will allow you to lift up to 5.6 tonnes a total distance of 400mm and consists of 25cm³ double acting handpump, hydraulic cylinder, 2 litre tank, 600mm lever along with hose and adaptors.

For more technical information on the double acting handpumps and rams please refer to the following pdf links:

HANDPUMPS
http://www.flowfitonline.com/acatalog/pdfs/Section6%20Handpumps-pdf.zip

CYLINDERS
http://www.flowfitonline.com/acatalog/pdfs/Section12%20Cylinders-pdf.zip

PART NO.	HANDPUMP DISPLACEMENT CM³	LEVER MM	CYLINDER STROKE MM	LIFT TONNES	MAX PRESSURE BAR	HYDRAULIC HOSE M	PRICE
ZZ000810	25	400	400	5.6	200	3m x 2	£384.65

ZZ000811 - DOUBLE ACTING HANDPUMP AND CYLINDER KIT

This kit will allow you to lift up to 5.6 tonnes a total distance of 600mm and consists of 25cm³ double acting handpump, hydraulic cylinder, 2 litre tank, 600mm lever along with hose and adaptors.

For more technical information on the double acting handpumps and rams please refer to the following pdf links:

HANDPUMPS
http://www.flowfitonline.com/acatalog/pdfs/Section6%20Handpumps-pdf.zip

CYLINDERS
http://www.flowfitonline.com/acatalog/pdfs/Section12%20Cylinders-pdf.zip

PART NO.	HANDPUMP DISPLACEMENT CM³	LEVER MM	CYLINDER STROKE MM	LIFT TONNES	MAX PRESSURE BAR	HYDRAULIC HOSE M	PRICE
ZZ000811	25	600	600	5.6	200	3m x 2	£404.11

ZZ000812 - DOUBLE ACTING HANDPUMP AND CYLINDER KIT

This kit will allow you to lift up to 5.6 tonnes a total distance of 700mm and consists of 25cm³ double acting handpump, hydraulic cylinder, 3 litre tank, 600mm lever along with hose and adaptors.

For more technical information on the double acting handpumps and rams please refer to the following pdf links:

HANDPUMPS
http://www.flowfitonline.com/acatalog/pdfs/Section6%20Handpumps-pdf.zip

CYLINDERS
http://www.flowfitonline.com/acatalog/pdfs/Section12%20Cylinders-pdf.zip

PART NO.	HANDPUMP DISPLACEMENT CM³	LEVER MM	CYLINDER STROKE MM	LIFT TONNES	MAX PRESSURE BAR	HYDRAULIC HOSE M	PRICE
ZZ000812	25	600	700	5.6	200	3m x 2	£416.71

DOUBLE ACTING HANDPUMP AND CYLINDER KITS

ZZ000813 - DOUBLE ACTING HANDPUMP AND CYLINDER KIT

This kit will allow you to lift up to 7.7 tonnes a total distance of 400mm and consists of 25cm³ double acting handpump, hydraulic cylinder, 2 litre tank, 600mm lever along with hose and adaptors.

For more technical information on the double acting handpumps and rams please refer to the following pdf links:

HANDPUMPS
http://www.flowfitonline.com/acatalog/pdfs/Section6%20Handpumps-pdf.zip

CYLINDERS
http://www.flowfitonline.com/acatalog/pdfs/Section12%20Cylinders-pdf.zip

PART NO.	HANDPUMP DISPLACEMENT CM³	LEVER MM	CYLINDER STROKE MM	LIFT TONNES	MAX PRESSURE BAR	HYDRAULIC HOSE M	PRICE
ZZ000813	25	600	400	7.7	200	3m x 2	£430.44

ZZ000814 - DOUBLE ACTING HANDPUMP AND CYLINDER KITS

This kit will allow you to lift up to 7.7 tonnes a total distance of 600mm and consists of 25cm3 double acting handpump, hydraulic cylinder, 3 litre tank, 600mm lever along with hose and adaptors.

For more technical information on the double acting handpumps and rams please refer to the following pdf links:

HANDPUMPS
http://www.flowfitonline.com/acatalog/pdfs/Section6%20Handpumps-pdf.zip

CYLINDERS
http://www.flowfitonline.com/acatalog/pdfs/Section12%20Cylinders-pdf.zip

PART NO.	HANDPUMP DISPLACEMENT CM³	LEVER MM	CYLINDER STROKE MM	LIFT TONNES	MAX PRESSURE BAR	HYDRAULIC HOSE M	PRICE
ZZ000814	25	600	600	7.7	200	3m x 2	£457.92

ZZ000815 - DOUBLE ACTING HANDPUMP AND CYLINDER KIT

This kit will allow you to lift up to 7.7 tonnes a total distance of 700mm and consists of 25cm3 double acting handpump, hydraulic cylinder, 3 litre tank, 800mm lever along with hose and adaptors.

For more technical information on the double acting handpumps and rams please refer to the following pdf links:

HANDPUMPS
http://www.flowfitonline.com/acatalog/pdfs/Section6%20Handpumps-pdf.zip

CYLINDERS
http://www.flowfitonline.com/acatalog/pdfs/Section12%20Cylinders-pdf.zip

PART NO.	HANDPUMP DISPLACEMENT CM³	LEVER MM	CYLINDER STROKE MM	LIFT TONNES	MAX PRESSURE BAR	HYDRAULIC HOSE M	PRICE
ZZ000815	25	600	700	7.7	200	3m x 2	£486.62

DOUBLE ACTING HANDPUMP AND CYLINDER KITS

ZZ000816 - DOUBLE ACTING HANDPUMP AND CYLINDER KIT

This kit will allow you to lift up to 10.0 tonnes a total distance of 400mm and consists of 25cm³ double acting handpump, hydraulic cylinder, 3 litre tank, 600mm lever along with hose and adaptors.

For more technical information on the double acting handpumps and rams please refer to the following pdf links:

HANDPUMPS
http://www.flowfitonline.com/acatalog/pdfs/Section6%20Handpumps-pdf.zip

CYLINDERS
http://www.flowfitonline.com/acatalog/pdfs/Section12%20Cylinders-pdf.zip

PART NO.	HANDPUMP DISPLACEMENT CM³	LEVER MM	CYLINDER STROKE MM	LIFT TONNES	MAX PRESSURE BAR	HYDRAULIC HOSE M	PRICE
ZZ000816	25	600	400	10	200	3m x 2	£473.95

ZZ000817 - DOUBLE ACTING HANDPUMP AND CYLINDER KIT

This kit will allow you to lift up to 10.0 tonnes a total distance of 600mm and consists of 25cm³ double acting handpump, hydraulic cylinder, 5 litre tank, 600mm lever along with hose and adaptors.

For more technical information on the double acting handpumps and rams please refer to the following pdf links:

HANDPUMPS
http://www.flowfitonline.com/acatalog/pdfs/Section6%20Handpumps-pdf.zip

CYLINDERS
http://www.flowfitonline.com/acatalog/pdfs/Section12%20Cylinders-pdf.zip

PART NO.	HANDPUMP DISPLACEMENT CM³	LEVER MM	CYLINDER STROKE MM	LIFT TONNES	MAX PRESSURE BAR	HYDRAULIC HOSE M	PRICE
ZZ000817	25	600	600	10	200	3m x 2	£520.88

ZZ000818 - DOUBLE ACTING HANDPUMP AND CYLINDER KIT

This kit will allow you to lift up to 10.0 tonnes a total distance of 700mm and consists of 25cm³ double acting handpump, hydraulic cylinder, 5 litre tank, 600mm lever along with hose and adaptors.

For more technical information on the double acting handpumps and rams please refer to the following pdf links:

HANDPUMPS
http://www.flowfitonline.com/acatalog/pdfs/Section6%20Handpumps-pdf.zip

CYLINDERS
http://www.flowfitonline.com/acatalog/pdfs/Section12%20Cylinders-pdf.zip

PART NO.	HANDPUMP DISPLACEMENT CM³	LEVER MM	CYLINDER STROKE	LIFT TONNES	MAX PRESSURE BAR	HYDRAULIC HOSE M	PRICE
ZZ000818	25	600	700	10	200	3m x 2	£536.91

12VDC SINGLE ACTING HYDRAULIC TRAILER KITS

ZZ000722 – 12VDC SINGLE ACTING HYDRAULIC TRAILER KIT

This kit will allow you to lift up to 2.5 tonnes a total distance of 400mm and consists of a 12 VDC single acting hydraulic powerpack with 2 button pendant, single acting hydraulic cylinder, 3 metre of hose along with required adapters and washers.

For more technical information on the single acting 12VDC powerpack and rams please refer to the following pdf links:

CYLINDERS
http://www.flowfitonline.com/acatalog/pdfs/Section12%20Cylinders-pdf.zip

PART NO.	FLOW L/MIN	WORKING PRESSURE/BAR	VOLTS V	CYLINDER STROKE MM	LIFT TONNES	HYDRAULIC HOSE M	PRICE
ZZ000722	4	220	12	400	2.5	3	£420.54

ZZ000723 - 12VDC SINGLE ACTING HYDRAULIC TRAILER KIT

This kit will allow you to lift up to 2.5 tonnes a total distance of 600mm and consists of a 12 VDC single acting hydraulic powerpack with 2 button pendant, single acting hydraulic cylinder, 3 metre of hose along with required adapters and washers.

For more technical information on the single acting 12VDC powerpack and rams please refer to the following pdf links:

CYLINDERS
http://www.flowfitonline.com/acatalog/pdfs/Section12%20Cylinders-pdf.zip

PART NO.	FLOW L/MIN	WORKING PRESSURE/BAR	VOLTS V	CYLINDER STROKE MM	LIFT TONNES	HYDRAULIC HOSE M	PRICE
ZZ000723	4	220	12	600	2.5	3	£431.14

ZZ000724 - 12VDC SINGLE ACTING HYDRAULIC TRAILER KIT

This kit will allow you to lift up to 2.5 tonnes a total distance of 700mm and consists of a 12 VDC single acting hydraulic powerpack with 2 button pendant, single acting hydraulic cylinder, 3 metre of hose along with required adapters and washers.

For more technical information on the single acting 12VDC powerpack and rams please refer to the following pdf links:

CYLINDERS
http://www.flowfitonline.com/acatalog/pdfs/Section12%20Cylinders-pdf.zip

PART NO.	FLOW L/MIN	WORKING PRESSURE/BAR	VOLTS V	CYLINDER STROKE MM	LIFT TONNES	HYDRAULIC HOSE M	PRICE
ZZ000724	4	220	12	700	2.5	3	£446.15

12VDC SINGLE ACTING HYDRAULIC TRAILER KITS

ZZ000727 - 12VDC SINGLE ACTING HYDRAULIC TRAILER KIT

This kit will allow you to lift up to 3.9 tonnes a total distance of 400mm and consists of a 12 VDC single acting hydraulic powerpack with 2 button pendant, single acting hydraulic cylinder, 3 metre of hose along with required adapters and washers.

For more technical information on the single acting 12VDC powerpack and rams please refer to the following pdf links:

CYLINDERS
http://www.flowfitonline.com/acatalog/pdfs/Section12%20Cylinders-pdf.zip

PART NO.	FLOW L/MIN	WORKING PRESSURE/BAR	VOLTS V	CYLINDER STROKE MM	LIFT TONNES	HYDRAULIC HOSE M	PRICE
ZZ000727	4	220	12	400	3.9	3	£441.98

ZZ000728 - 12VDC SINGLE ACTING HYDRAULIC TRAILER KIT

This kit will allow you to lift up to 3.9 tonnes a total distance of 600mm and consists of a 12 VDC single acting hydraulic powerpack with 2 button pendant, single acting hydraulic cylinder, 3 metre of hose along with required adapters and washers

For more technical information on the single acting 12VDC powerpack and rams please refer to the following pdf links:

CYLINDERS
http://www.flowfitonline.com/acatalog/pdfs/Section12%20Cylinders-pdf.zip

PART NO.	FLOW L/MIN	WORKING PRESSURE/BAR	VOLTS V	CYLINDER STROKE MM	LIFT TONNES	HYDRAULIC HOSE M	PRICE
ZZ000728	4	220	12	600	3.9	3	£451.98

ZZ000729 - 12VDC SINGLE ACTING HYDRAULIC TRAILER KIT

This kit will allow you to lift up to 3.9 tonnes a total distance of 700mm and consists of a 12 VDC single acting hydraulic powerpack with 2 button pendant, single acting hydraulic cylinder, 3 metre of hose along with required adapters and washers.

For more technical information on the single acting 12VDC powerpack and rams please refer to the following pdf links:

CYLINDERS
http://www.flowfitonline.com/acatalog/pdfs/Section12%20Cylinders-pdf.zip

PART NO.	FLOW L/MIN	WORKING PRESSURE/BAR	VOLTS V	CYLINDER STROKE MM	LIFT TONNES	HYDRAULIC HOSE M	PRICE
ZZ000729	4	220	12	700	3.9	3	£468.12

12VDC SINGLE ACTING HYDRAULIC TRAILER KITS

ZZ000730 - 12VDC SINGLE ACTING HYDRAULIC TRAILER KIT

This kit will allow you to lift up to 5.6 tonnes a total distance of 400mm and consists of a 12 VDC single acting hydraulic powerpack with 2 button pendant, single acting hydraulic cylinder, 3 metre of hose along with required adapters and washers.

For more technical information on the single acting 12VDC powerpack and rams please refer to the following pdf links:

CYLINDERS
http://www.flowfitonline.com/acatalog/pdfs/Section12%20Cylinders-pdf.zip

PART NO.	FLOW L/MIN	WORKING PRESSURE/BAR	VOLTS V	CYLINDER STROKE MM	LIFT TONNES	HYDRAULIC HOSE M	PRICE
ZZ000730	4	220	12	400	5.6	3	£475.35

ZZ000731 - 12VDC SINGLE ACTING HYDRAULIC TRAILER KIT

This kit will allow you to lift up to 5.6 tonnes a total distance of 600mm and consists of a 12 VDC single acting hydraulic powerpack with 2 button pendant, single acting hydraulic cylinder, 3 metre of hose along with required adapters and washers.

For more technical information on the single acting 12VDC powerpack and rams please refer to the following pdf links:

CYLINDERS
http://www.flowfitonline.com/acatalog/pdfs/Section12%20Cylinders-pdf.zip

PART NO.	FLOW L/MIN	WORKING PRESSURE/BAR	VOLTS V	CYLINDER STROKE MM	LIFT TONNES	HYDRAULIC HOSE M	PRICE
ZZ000731	4	220	12	600	5.6	3	£502.78

ZZ000732 - 12VDC SINGLE ACTING HYDRAULIC TRAILER KIT

This kit will allow you to lift up to 5.6 tonnes a total distance of 700mm and consists of a 12 VDC single acting hydraulic powerpack with 2 button pendant, single acting hydraulic cylinder, 3 metre of hose along with required adapters and washers

For more technical information on the single acting 12VDC powerpack and rams please refer to the following pdf links:

CYLINDERS
http://www.flowfitonline.com/acatalog/pdfs/Section12%20Cylinders-pdf.zip

PART NO.	FLOW L/MIN	WORKING PRESSURE/BAR	VOLTS V	CYLINDER STROKE MM	LIFT TONNES	HYDRAULIC HOSE M	PRICE
ZZ000732	4	220	12	700	5.6	3	£517.68

50% OFF ALL PRICES

12VDC SINGLE ACTING HYDRAULIC TRAILER KITS

ZZ000733 - 12VDC SINGLE ACTING HYDRAULIC TRAILER KIT

This kit will allow you to lift up to 7.7 tonnes a total distance of 400mm and consists of a 12 VDC single acting hydraulic powerpack with 2 button pendant, single acting hydraulic cylinder, 3 metre of hose along with required adapters and washers.

For more technical information on the single acting 12VDC powerpack and rams please refer to the following pdf links:

CYLINDERS
http://www.flowfitonline.com/acatalog/pdfs/Section12%20Cylinders-pdf.zip

PART NO.	FLOW L/MIN	WORKING PRESSURE/BAR	VOLTS V	CYLINDER STROKE MM	LIFT TONNES	HYDRAULIC HOSE M	PRICE
ZZ000733	4	220	12	400	7.7	3	£517.62

ZZ000734- 12VDC SINGLE ACTING HYDRAULIC TRAILER KIT

This kit will allow you to lift up to 7.7 tonnes a total distance of 600mm and consists of a 12 VDC single acting hydraulic powerpack with 2 button pendant, single acting hydraulic cylinder, 3 metre of hose along with required adapters and washers.

For more technical information on the single acting 12VDC powerpack and rams please refer to the following pdf links:

CYLINDERS
http://www.flowfitonline.com/acatalog/pdfs/Section12%20Cylinders-pdf.zip

PART NO.	FLOW L/MIN	WORKING PRESSURE/BAR	VOLTS V	CYLINDER STROKE MM	LIFT TONNES	HYDRAULIC HOSE M	PRICE
ZZ000734	4	220	12	600	7.7	3	£547.70

ZZ000735- 12VDC SINGLE ACTING HYDRAULIC TRAILER KIT

This kit will allow you to lift up to 7.7 tonnes a total distance of 700mm and consists of a 12 VDC single acting hydraulic powerpack with 2 button pendant, single acting hydraulic cylinder, 3 metre of hose along with required adapters and washers.

For more technical information on the single acting 12VDC powerpack and rams please refer to the following pdf links:

CYLINDERS
http://www.flowfitonline.com/acatalog/pdfs/Section12%20Cylinders-pdf.zip

PART NO.	FLOW L/MIN	WORKING PRESSURE/BAR	VOLTS V	CYLINDER STROKE MM	LIFT TONNES	HYDRAULIC HOSE M	PRICE
ZZ000735	4	220	12	700	7.7	3	£558.01

12VDC SINGLE ACTING HYDRAULIC TRAILER KITS

ZZ000736- 12VDC SINGLE ACTING HYDRAULIC TRAILER KIT

This kit will allow you to lift up to 10 tonnes a total distance of 400mm and consists of a 12 VDC single acting hydraulic powerpack with 2 button pendant, single acting hydraulic cylinder, 3 metre of hose along with required adapters and washers.

For more technical information on the single acting 12VDC powerpack and rams please refer to the following pdf links:

CYLINDERS
http://www.flowfitonline.com/acatalog/pdfs/Section12%20Cylinders-pdf.zip

PART NO.	FLOW L/MIN	WORKING PRESSURE/BAR	VOLTS V	CYLINDER STROKE MM	LIFT TONNES	HYDRAULIC HOSE M	PRICE
ZZ000736	4	220	12	400	10	3	£474.71

ZZ000737- 12VDC SINGLE ACTING HYDRAULIC TRAILER KIT

This kit will allow you to lift up to 10 tonnes a total distance of 600mm and consists of a 12 VDC single acting hydraulic powerpack with 2 button pendant, single acting hydraulic cylinder, 3 metre of hose along with required adapters and washers.

For more technical information on the single acting 12VDC powerpack and rams please refer to the following pdf links:

CYLINDERS
http://www.flowfitonline.com/acatalog/pdfs/Section12%20Cylinders-pdf.zip

PART NO.	FLOW L/MIN	WORKING PRESSURE/BAR	VOLTS V	CYLINDER STROKE MM	LIFT TONNES	HYDRAULIC HOSE M	PRICE
ZZ000737	4	220	12	600	10	3	£529.70

ZZ000738- 12VDC SINGLE ACTING HYDRAULIC TRAILER KIT

This kit will allow you to lift up to 10 tonnes a total distance of 700mm and consists of a 12 VDC single acting hydraulic powerpack with 2 button pendant, single acting hydraulic cylinder, 3 metre of hose along with required adapters and washers.

For more technical information on the single acting 12VDC powerpack and rams please refer to the following pdf links:

CYLINDERS
http://www.flowfitonline.com/acatalog/pdfs/Section12%20Cylinders-pdf.zip

PART NO.	FLOW L/MIN	WORKING PRESSURE/BAR	VOLTS V	CYLINDER STROKE MM	LIFT TONNES	HYDRAULIC HOSE M	PRICE
ZZ000738	4	220	12	700	10	3	£551.09

50% OFF ALL PRICES

24VDC SINGLE ACTING HYDRAULIC TRAILER KITS

ZZ000741- 24VDC SINGLE ACTING HYDRAULIC TRAILER KIT

This kit will allow you to lift up to 2.5 tonnes a total distance of 400mm and consists of a 24 VDC single acting hydraulic powerpack with 2 button pendant, single acting hydraulic cylinder, 3 metre of hose oil along with required adapters and washers.

For more technical information on the single acting 24VDC powerpack and rams please refer to the following pdf links:

CYLINDERS
http://www.flowfitonline.com/acatalog/pdfs/Section12%20Cylinders-pdf.zip

PART NO.	FLOW L/MIN	WORKING PRESSURE/BAR	VOLTS V	CYLINDER STROKE MM	LIFT TONNES	HYDRAULIC HOSE M	PRICE
ZZ000741	4	220	24	400	2.5	3	£420.54

ZZ000742- 24VDC SINGLE ACTING HYDRAULIC TRAILER KIT

This kit will allow you to lift up to 2.5 tonnes a total distance of 600mm and consists of a 24 VDC single acting hydraulic powerpack with 2 button pendant, single acting hydraulic cylinder, 3 metre of hose along with required adapters and washers.

For more technical information on the single acting 24VDC powerpack and rams please refer to the following pdf links:

CYLINDERS
http://www.flowfitonline.com/acatalog/pdfs/Section12%20Cylinders-pdf.zip

PART NO.	FLOW L/MIN	WORKING PRESSURE/BAR	VOLTS V	CYLINDER STROKE MM	LIFT TONNES	HYDRAULIC HOSE M	PRICE
ZZ000742	4	220	24	600	2.5	3	£431.14

ZZ000743- 24VDC SINGLE ACTING HYDRAULIC TRAILER KIT

This kit will allow you to lift up to 2.5 tonnes a total distance of 700mm and consists of a 24 VDC single acting hydraulic powerpack with 2 button pendant, single acting hydraulic cylinder, 3 metre of hose along with required adapters and washers.

For more technical information on the single acting 24VDC powerpack and rams please refer to the following pdf links:

CYLINDERS
http://www.flowfitonline.com/acatalog/pdfs/Section12%20Cylinders-pdf.zip

PART NO.	FLOW L/MIN	WORKING PRESSURE/BAR	VOLTS V	CYLINDER STROKE MM	LIFT TONNES	HYDRAULIC HOSE M	PRICE
ZZ000743	4	220	24	700	2.5	3	£446.15

24VDC SINGLE ACTING HYDRAULIC TRAILER KITS

ZZ000744- 24VDC SINGLE ACTING HYDRAULIC TRAILER KIT

This kit will allow you to lift up to 3.9 tonnes a total distance of 400mm and consists of a 24 VDC single acting hydraulic powerpack with 2 button pendant, single acting hydraulic cylinder, 3 metre of hose along with required adapters and washers.

For more technical information on the single acting 24VDC powerpack and rams please refer to the following pdf links:

CYLINDERS
http://www.flowfitonline.com/acatalog/pdfs/Section12%20Cylinders-pdf.zip

PART NO.	FLOW L/MIN	WORKING PRESSURE/BAR	VOLTS V	CYLINDER STROKE MM	LIFT TONNES	HYDRAULIC HOSE M	PRICE
ZZ000744	4	220	24	400	3.9	3	£441.98

ZZ000747- 24VDC SINGLE ACTING HYDRAULIC TRAILER KIT

This kit will allow you to lift up to 3.9 tonnes a total distance of 600mm and consists of a 24 VDC single acting hydraulic powerpack with 2 button pendant, single acting hydraulic cylinder, 3 metre of hose along with required adapters and washers.

For more technical information on the single acting 24VDC powerpack and rams please refer to the following pdf links:

CYLINDERS
http://www.flowfitonline.com/acatalog/pdfs/Section12%20Cylinders-pdf.zip

PART NO.	FLOW L/MIN	WORKING PRESSURE/BAR	VOLTS V	CYLINDER STROKE MM	LIFT TONNES	HYDRAULIC HOSE M	PRICE
ZZ000747	4	220	24	600	3.9	3	£451.98

ZZ000748- 24VDC SINGLE ACTING HYDRAULIC TRAILER KIT

This kit will allow you to lift up to 3.9 tonnes a total distance of 700mm and consists of a 24 VDC single acting hydraulic powerpack with 2 button pendant, single acting hydraulic cylinder, 3 metre of hose along with required adapters and washers.

For more technical information on the single acting 24VDC powerpack and rams please refer to the following pdf links:

CYLINDERS
http://www.flowfitonline.com/acatalog/pdfs/Section12%20Cylinders-pdf.zip

PART NO.	FLOW L/MIN	WORKING PRESSURE/BAR	VOLTS V	CYLINDER STROKE MM	LIFT TONNES	HYDRAULIC HOSE M	PRICE
ZZ000748	4	220	24	700	3.9	3	£468.12

24VDC SINGLE ACTING HYDRAULIC TRAILER KITS

ZZ000749- 24VDC ACTING HYDRAULIC TRAILER KIT

This kit will allow you to lift up to 5.6 tonnes a total distance of 400mm and consists of a 24 VDC single acting hydraulic powerpack with 2 button pendant, single acting hydraulic cylinder, 3 metre of hose along with required adapters and washers.

For more technical information on the single acting 24VDC powerpack and rams please refer to the following pdf links:

CYLINDERS
http://www.flowfitonline.com/acatalog/pdfs/Section12%20Cylinders-pdf.zip

PART NO.	FLOW L/MIN	WORKING PRESSURE/BAR	VOLTS V	CYLINDER STROKE MM	LIFT TONNES	HYDRAULIC HOSE M	PRICE
ZZ000749	4	220	24	400	5.6	3	£475.34

ZZ000750- 24VDC SINGLE ACTING HYDRAULIC TRAILER KIT

This kit will allow you to lift up to 5.6 tonnes a total distance of 600mm and consists of a 24 VDC single acting hydraulic powerpack with 2 button pendant, single acting hydraulic cylinder, 3 metre of hose along with required adapters and washers.

For more technical information on the single acting 24VDC powerpack and rams please refer to the following pdf links:

CYLINDERS
http://www.flowfitonline.com/acatalog/pdfs/Section12%20Cylinders-pdf.zip

PART NO.	FLOW L/MIN	WORKING PRESSURE/BAR	VOLTS V	CYLINDER STROKE MM	LIFT TONNES	HYDRAULIC HOSE M	PRICE
ZZ000750	4	220	24	600	5.6	3	£502.77

ZZ000751- 24VDC SINGLE ACTING HYDRAULIC TRAILER KIT

This kit will allow you to lift up to 5.6 tonnes a total distance of 700mm and consists of a 24 VDC single acting hydraulic powerpack with 2 button pendant, single acting hydraulic cylinder, 3 metre of hose along with required adapters and washers.

For more technical information on the single acting 24VDC powerpack and rams please refer to the following pdf links:

CYLINDERS
http://www.flowfitonline.com/acatalog/pdfs/Section12%20Cylinders-pdf.zip

PART NO.	FLOW L/MIN	WORKING PRESSURE/BAR	VOLTS V	CYLINDER STROKE MM	LIFT TONNES	HYDRAULIC HOSE M	PRICE
ZZ000751	4	220	24	700	5.6	3	£517.69

24VDC SINGLE ACTING HYDRAULIC TRAILER KITS

ZZ000752- 24VDC SINGLE ACTING HYDRAULIC TRAILER KIT

This kit will allow you to lift up to 7.7 tonnes a total distance of 400mm and consists of a 24 VDC single acting hydraulic powerpack with 2 button pendant, single acting hydraulic cylinder, 3 metre of hose along with required adapters and washers.

For more technical information on the single acting 24VDC powerpack and rams please refer to the following pdf links:

CYLINDERS
http://www.flowfitonline.com/acatalog/pdfs/Section12%20Cylinders-pdf.zip

PART NO.	FLOW L/MIN	WORKING PRESSURE/BAR	VOLTS V	CYLINDER STROKE MM	LIFT TONNES	HYDRAULIC HOSE M	PRICE
ZZ000752	4	220	24	400	7.7	3	£517.62

ZZ000753- 24VDC SINGLE ACTING HYDRAULIC TRAILER KIT

This kit will allow you to lift up to 7.7 tonnes a total distance of 600mm and consists of a 24 VDC single acting hydraulic powerpack with 2 button pendant, single acting hydraulic cylinder, 3 metre of hose along with required adapters and washers.

For more technical information on the single acting 24VDC powerpack and rams please refer to the following pdf links:

CYLINDERS
http://www.flowfitonline.com/acatalog/pdfs/Section12%20Cylinders-pdf.zip

PART NO.	FLOW L/MIN	WORKING PRESSURE/BAR	VOLTS V	CYLINDER STROKE MM	LIFT TONNES	HYDRAULIC HOSE M	PRICE
ZZ000753	4	220	24	600	7.7	3	£547.70

ZZ000754- 24VDC SINGLE ACTING HYDRAULIC TRAILER KIT

This kit will allow you to lift up to 7.7 tonnes a total distance of 700mm and consists of a 24 VDC single acting hydraulic powerpack with 2 button pendant, single acting hydraulic cylinder, 3 metre of hose along with required adapters and washers

For more technical information on the single acting 24VDC powerpack and rams please refer to the following pdf links:

CYLINDERS
http://www.flowfitonline.com/acatalog/pdfs/Section12%20Cylinders-pdf.zip

PART NO.	FLOW L/MIN	WORKING PRESSURE/BAR	VOLTS V	CYLINDER STROKE MM	LIFT TONNES	HYDRAULIC HOSE M	PRICE
ZZ000754	4	220	24	700	7.7	3	£611.01

24VDC SINGLE ACTING HYDRAULIC TRAILER KITS

ZZ000755- 24VDC SINGLE ACTING HYDRAULIC TRAILER KIT

This kit will allow you to lift up to 10 tonnes a total distance of 400mm and consists of a 24 VDC single acting hydraulic powerpack with 2 button pendant, single acting hydraulic cylinder, 3 metre of hose along with required adapters and washers.

For more technical information on the single acting 24VDC powerpack and rams please refer to the following pdf links:

CYLINDERS
http://www.flowfitonline.com/acatalog/pdfs/Section12%20Cylinders-pdf.zip

PART NO.	FLOW L/MIN	WORKING PRESSURE/BAR	VOLTS V	CYLINDER STROKE MM	LIFT TONNES	HYDRAULIC HOSE M	PRICE
ZZ000755	4	220	24	400	10	3	£474.71

ZZ000756- 24VDC SINGLE ACTING HYDRAULIC TRAILER KIT

This kit will allow you to lift up to 10 tonnes a total distance of 600mm and consists of a 24 VDC single acting hydraulic powerpack with 2 button pendant, single acting hydraulic cylinder, 3 metre of hose along with required adapters and washers.

For more technical information on the single acting 24VDC powerpack and rams please refer to the following pdf links:

CYLINDERS
http://www.flowfitonline.com/acatalog/pdfs/Section12%20Cylinders-pdf.zip

PART NO.	FLOW L/MIN	WORKING PRESSURE/BAR	VOLTS V	CYLINDER STROKE MM	LIFT TONNES	HYDRAULIC HOSE M	PRICE
ZZ000756	4	220	24	600	10	3	£529.70

ZZ000757- 24VDC SINGLE ACTING HYDRAULIC TRAILER KIT

This kit will allow you to lift up to 10 tonnes a total distance of 700mm and consists of a 24 VDC single acting hydraulic powerpack with 2 button pendant, single acting hydraulic cylinder, 3 metre of hose along with required adapters and washers.

For more technical information on the single acting 24VDC powerpack and rams please refer to the following pdf links:

CYLINDERS
http://www.flowfitonline.com/acatalog/pdfs/Section12%20Cylinders-pdf.zip

PART NO.	FLOW L/MIN	WORKING PRESSURE/BAR	VOLTS V	CYLINDER STROKE MM	LIFT TONNES	HYDRAULIC HOSE M	PRICE
ZZ000757	4	220	24	700	10	3	£551.09

HYDRAULIC TWO STAGE HI-LO GEAR PUMPS

HYDRAULIC GEAR PUMP MODEL GP-CBN TECHNICAL DATA 371
HYDRAULIC GEAR PUMP MODEL GP-CBN ORDERING INFORMATION.....371
HYDRAULIC GEAR PUMP MODEL GP-CBN INSTALLATION DATA 372

These 2 stage pumps can give you much faster cycle times and higher possible pressures with a small engine. Excellent for use on log splitters. 85% efficient.

Model GP-CBN is a HI/LO Hydraulic Gear Pump with 12 displacement combinations with maximum pressures of 950 psi for the low pressure pump and 3000 psi for the high pressure pump.

The change from LO to HI pressure is automatic with the LO side pressure pre set from 400 psi to 900 psi. The HI/LO section of the pump is all aluminum and the endplates are cast steel. Applications for the HI/LO pump are log splitters, presses etc. where rapid movement of the cylinder at low pressure is required prior to automatically switching to the high pressure mode to meet load requirements.

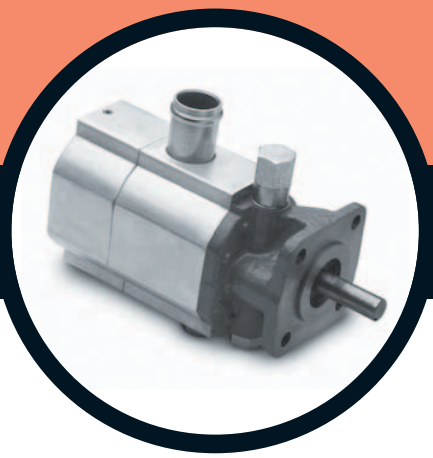

FLOWFIT

HYDRAULIC GEAR PUMP MODEL GP-CBN TECHNICAL DATA

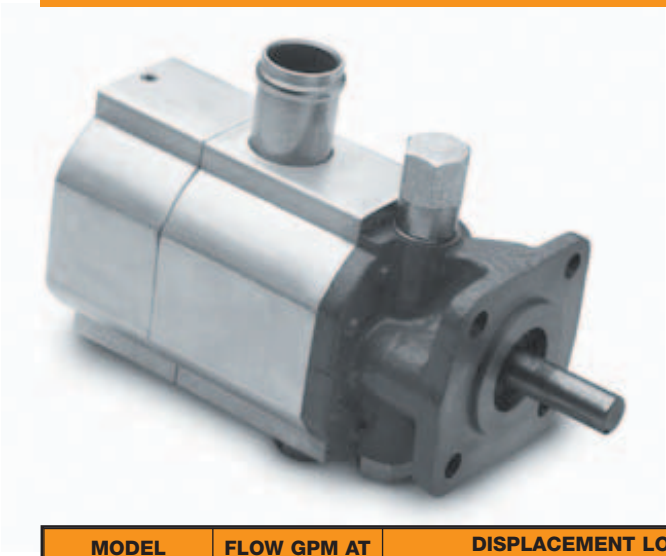

FLOWFIT

Recommended working conditions:

1. FILTRATION 25 micron or better
2. OIL VISCOSITY 6 to 200 cSt
3. INLET PRESSURE 12 to 32 psi abs.
4. OIL TEMPERATURE -25 to 80 degrees C (-12 to 175 degrees F).
5. AMBIENT -22 to 55 degrees C (-8 to 130 degrees F).

Flow rate in gpm
Displacement (cu.in/rev) X speed (rpm) / 231
Volumetric efficency 93%
1 cu/in = 16.387 cc/rev

MODEL PREFIX GP	FLOW GPM AT 3600 RPM	DISPLACEMENT LO		DISPLACEMENT HIGH		PRESSURE PSI		SPEED RPM	LIST PRICE £
		CU IN/REV	CC/REV	CU IN/REV	CC/REV	LO	HI		
GPCBN080PC*	8	0.130	2.1	0.385	6.3	400/900	3000	3600	£217.51
GPCBN085PC	8.5	0.183	2.9	0.385	6.3	400/900	3000	3600	£217.51
GPCBN09PC	9	0.220	3.6	0.385	6.3	400/900	3000	3600	£217.51
GPCBN100PC	10	0.130	2.1	0.537	8.8	400/900	3000	3600	£217.51
GPCBN105PC	10.5	0.183	2.99	0.537	8.8	400/900	3000	3600	£217.51
GPCBN110PC*	11	0.220	3.6	0.537	8.8	400/900	3000	3600	£217.51
GPCBN115PC	11.5	0.256	4.2	0.537	8.8	400/900	3000	3600	£217.51
GPCBN120PC	12	0.130	2.1	0.665	10.9	400/900	3000	3600	£217.51
GPCBN125PC	12.5	0.183	2.9	0.665	10.9	400/900	3000	3600	£217.51
GPCBN130PC	13	0.220	3.6	0.665	10.9	400/900	3000	3600	£217.51
GPCBN135PC	13.5	0.256	4.2	0.665	10.9	400/900	3000	3600	£217.51
GPCBN160PC*	16	0.256	4.2	0.793	13	400/900	3000	3600	£217.51

* UK STOCKED. ALL OTHERS ON REQUEST

HYDRAULIC GEAR PUMP MODEL GP-CBN ORDERING INFORMATION

GP – CBN – 105 – P – C

Gear Pump

HI/LO series

Nominal Flow GPM at 3600 rpm.

080/085/090/100/105 110/115/120/125/130 135/160

Drive Shaft P-1/2 in. Dia Straight

Rotation Direction

C– Clockwise
A–Counter Clockwise
(viewed from drive shaft end)

HYDRAULIC GEAR PUMP MODEL GP-CBN INSTALLATION DATA

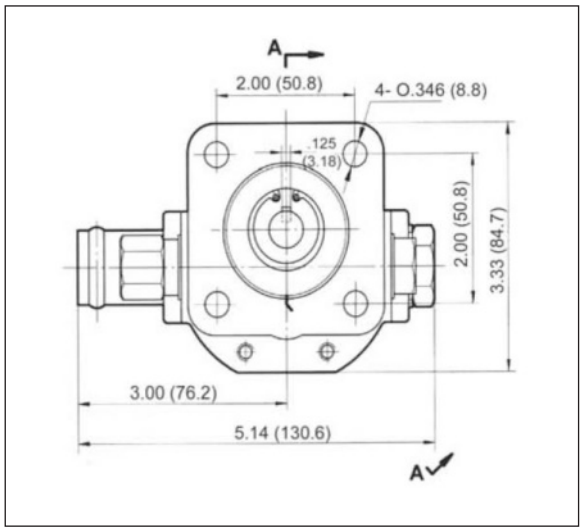

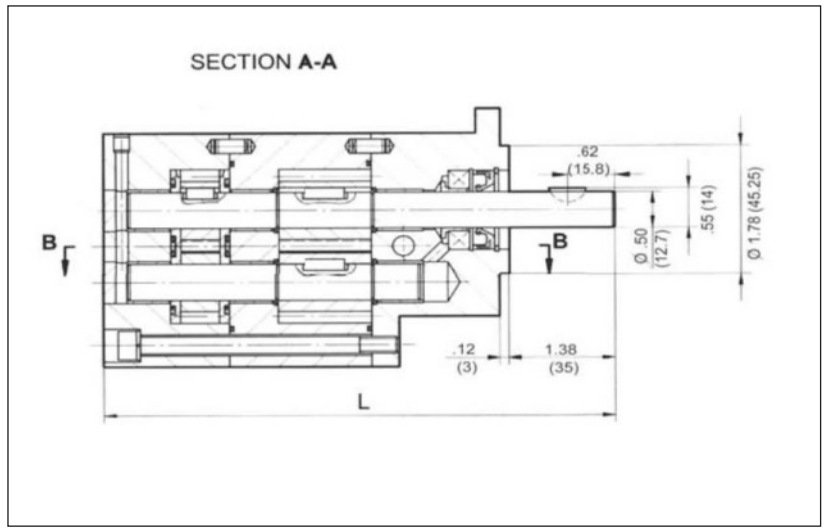

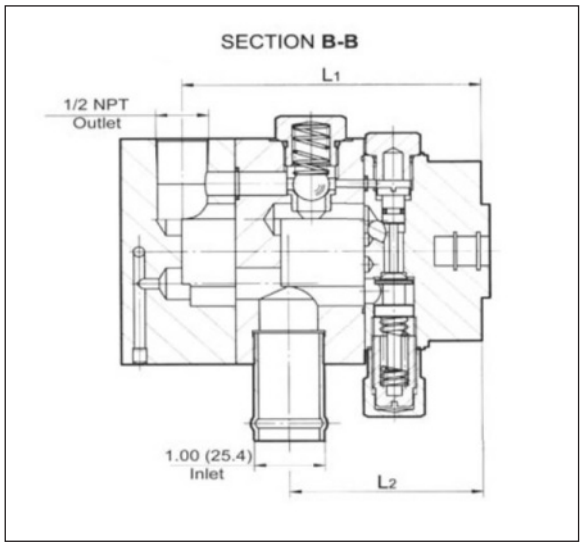

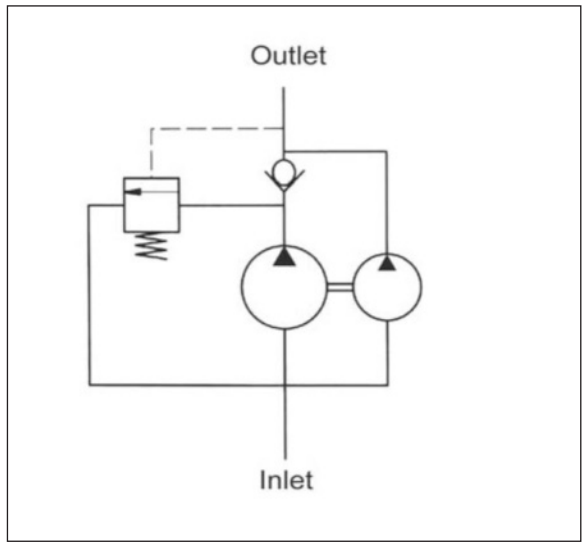

Port Sizes
Inlet - 1in. Pipe
Outlet - 1/2 NPT

MODEL	DIMENSIONS		
	L INCHES (MM)	L1 INCHES (MM)	L2 INCHES (MM)
GPCBN080PC	6.09 (154.7)	3.71 (94.4)	2.42 (61.6)
GPCBN085PC	6.22 (158.2)	3.85 (97.9)	2.42 (61.6)
GPCBN090PC	6.29 (159.9)	3.92 (99.6)	2.42 (61.6)
GPCBN100PC	6.37 (162.7)	4.03 (102.4)	2.74 (69.6)
GPCBN105PC	6.54 (166.2)	4.16 (105.9)	2.74 (69.6)
GPCBN110PC	6.61 (167.9)	4.23 (107.6)	2.74 (69.6)

MODEL	DIMENSIONS		
	L INCHES (MM)	L1 INCHES (MM)	L2 INCHES (MM)
GPCBN115PC	6.70 (170.2)	4.32 (109.9)	2.74 (69.6)
GPCBN120PC	6.70 (170.2)	4.32 (109.9)	3.03 (77.1)
GPCBN125PC	6.83 (173.7)	4.46 (113.4)	3.03 (77.1)
GPCBN130PC	6.90 (175.4)	4.53 (115.1)	3.03 (77.1)
GPCBN135PC	6.99 (177.7)	4.62 (117.4)	3.03 (77.1)
GPCBN160PC	7.27 (184.7)	4.80 (122.1)	3.31 (84.1)

50% OFF ALL PRICES

MANUFACTURING OF HYDRAULIC CYLINDERS

SERIES 100 - SINGLE ACTING HYDRAULIC CYLINDER.....374
SERIES 200 - DOUBLE ACTING HYDRAULIC CYLINDER 376
SERIES 300 - DOUBLE ACTING HYDRAULIC CYLINDER (NO ENDS) .. 378
SERIES 400 - DOUBLE ACTING HYDRAULIC CYLINDER 380
SERIES 500 - DOUBLE ACTING HYDRAULIC CYLINDER (FRONT FLANGE).382
SERIES 590 - TURN-OVER PLOUGH CYLINDER 383
SERIES 600 - STANDARD HYDRAULIC TOP LINK 384
SERIES 610 - HYDRAULIC TOP LINK (FIXED) 385
SERIES 620 - HYDRAULIC TOP LINK (RAPID HOOK) 386
SERIES 630 - HYDRAULIC TOP LINK (RAPID HOOK) 387
SERIES 640 - HYDRAULIC TOP LINK (ADJUSTABLE BALL JOINT) 388
SERIES 650 - HYDRAULIC LEVELLING ARM.....389
SERIES 700 - BRAKE CYLINDER (SINGLE ACTING).....390
SERIES 710 - BRAKE CYLINDER (SINGLE ACTING).....390
SERIES 800 - HYDRAULIC CRUTCH (SINGLE ACTING) 391
ATTACHMENTS 392
COMPONENTS 402
HYDRAULIC VALVES 411
OIL SEALS KITS 412

FLOWFIT

SERIES 100 - SINGLE ACTING HYDRAULIC CYLINDER

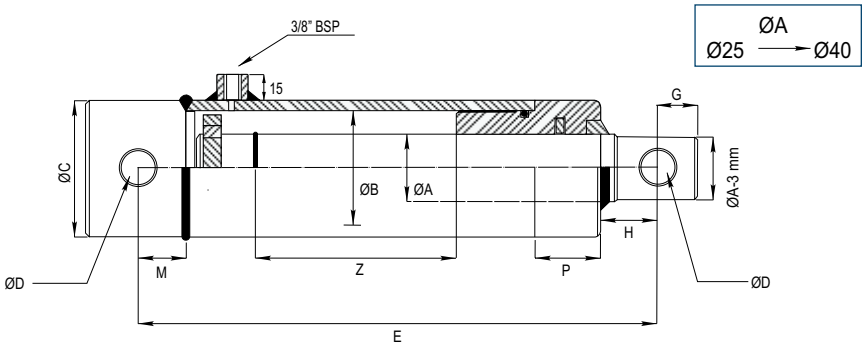

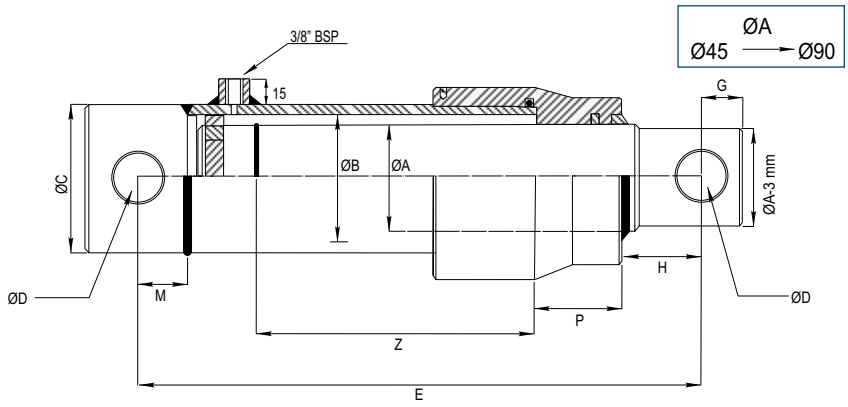

Presión de trabajo: 180 bars.
Velocidad: 0.5 m/s.
Temperatura de trabajo: -25ºC - +80ºC
Aceite: Aceite mineral
Vástago: C45 f7 25 micras.
Tubo: St52.3 Din2393 Iso H9

Working pressure: 180 bars.
Speed: 0.5 m/s.
Working temperature: -25ºC - +80ºC.
Oil: Mineral oil.
Rod: C45 f7 25 microns.
Tube: St52.3 Din2393 Iso H9

Pandeo
Buckling

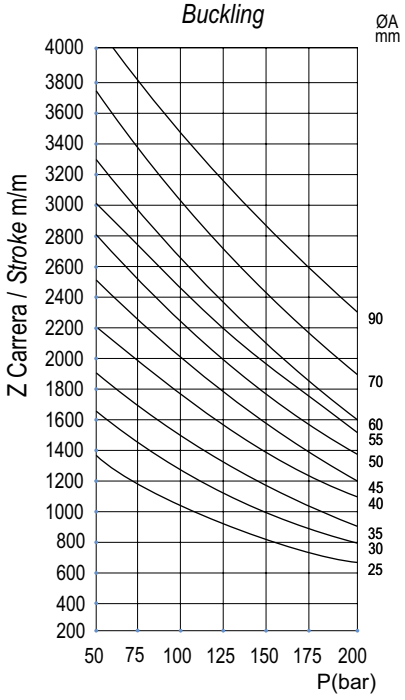

Fuerza de empuje
Upward thrust

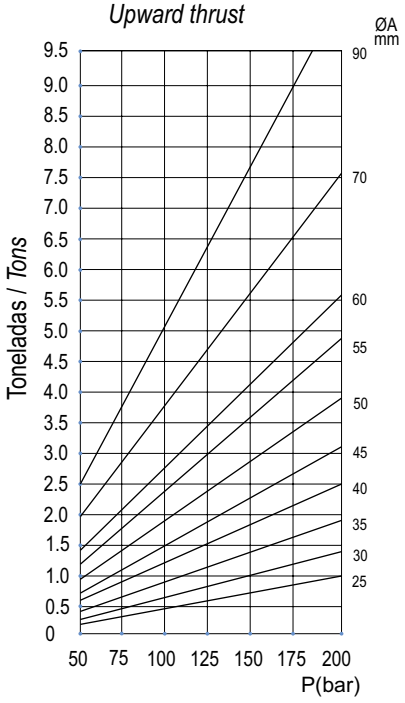

1 bar= 14.21 psi

Cálculo de la fuerza de empuje

Empuje = π x r² x presión(bar)

Ejemplo = Cilindro 40-50/60

3.14 x 2.5² x 150(bar)

Total = 2.943,75 Kgs.

Cálculo del volumen de un cilindro

Volumen = π x r² x h(altura)

Ejemplo = Cilindro 40-50/60-2000(mm.)

3.14 x 2.5² x 0,2

Total = 3,925 lts.

50% OFF ALL PRICES

SERIES 100 - SINGLE ACTING HYDRAULIC CYLINDER FLOWFIT

Order Code	ØA	B	Z Carrera *Stroke*	E	G	D	C	H	M	P	Vol. (litros) *(liters)*	Peso *Weight* Kgs.	Price
100/010	25	32	100	190	14	14.25	40	20	17	20	0.08	1.50	£110.12
100/020			200	290							0.16	2.30	£122.15
100/030			300	390							0.24	3.00	£133.98
101/020	30	40	200	300	15	16.25	50	22	22	22	0.25	3.60	£145.53
101/030			300	400							0.38	4.70	£160.90
101/040			400	500							0.50	6.00	£178.59
101/050			500	600							0.69	7.60	££194.08
101/070			700	800							0.88	9.40	£233.58
102/020	35	45	200	330	17	20.50	55	24	25	24	0.32	4.70	£154.55
102/030			300	430							0.48	6.10	£171.31
102/040			400	530							0.64	7.50	£188.10
102/050			500	630							0.87	9.60	£204.74
102/070			700	830							1.11	11.70	£238.14
103/020	40	50	200	330			60	32		32	0.39	6.00	£196.65
103/030			300	430							0.59	7.60	£218.84
103/040			400	530							0.79	9.30	£241.12
103/050			500	630							1.08	11.70	£263.28
103/070			700	830							1.37	14.20	£307.70
104/020	45	50	200	330	23	25.50		35		35	0.39	7.00	£248.62
104/030			300	430							0.59	8.90	£272.90
104/040			400	530							0.79	10.90	£297.16
104/050			500	630							1.08	13.70	£321.59
104/070			700	830							1.37	16.70	£370.14
105/020	50	55	200	360			65			44	0.48	8.90	£260.18
105/030			300	460							0.71	11.20	£288.18
105/040			400	560							0.95	13.50	£316.19
105/050			500	660							1.31	16.80	£344.17
105/070			700	860							1.66	20.40	£400.17
106/030	55	60	300	460			70			52	0.85	13.60	£415.94
106/050			500	660							1.56	19.30	£489.30
106/070			700	860							1.98	24.20	£562.66
107/020	60	65	200	360			75		29		0.66	12.60	£379.36
107/030			300	460							1.00	15.70	£416.01
107/040			400	560							1.33	18.70	£452.72
107/050			500	660							1.83	23.30	£489.37
107/070			700	860							2.32	28.40	£562.70
108/030	70	80	300	480	25	30.50	90	40		67	1.51	25.10	£467.41
108/040			400	580							2.02	29.60	£517.82
108/050			500	680							2.52	34.50	£564.32
108/070			700	880							3.53	43.40	£661.27
109/030	90		300	480			115				2.37	36.50	£POA
109/050			500	680							3.94	41.50	£POA
109/070			700	880							5.52	48.50	£POA

* Unidades en milimetros.
Units in milimeters.

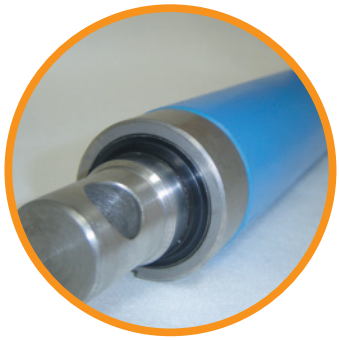

SERIES 200 - DOUBLE ACTING HYDRAULIC CYLINDER

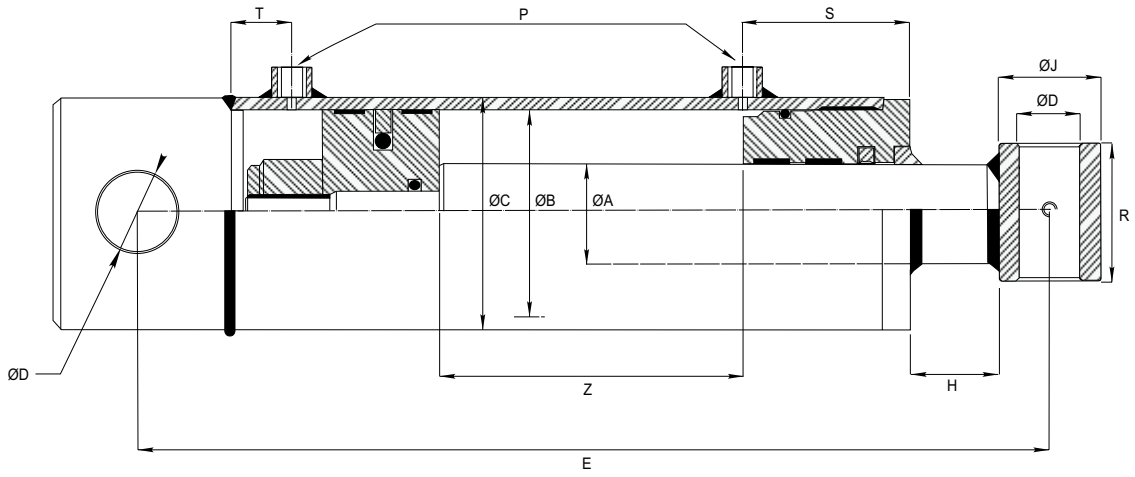

Presión de trabajo: 180 bars.
Velocidad: 0.5 m/s.
Temperatura de trabajo: -25ºC - +80ºC
Aceite: Aceite mineral
Vástago: C45 f7 25 micras.
Tubo: St52.3 Din2393 Iso H9

Working pressure: 180 bars.
Speed: 0.5 m/s.
Working temperature: -25ºC - +80ºC.
Oil: Mineral oil.
Rod: C45 f7 25 microns.
Tube: St52.3 Din2393 Iso H9

Cálculo del volumen de un cilindro

Volumen = π x r² x h(altura)
Ejemplo = Cilindro 40-70/80-400(mm.)
3.14 x 3.5² x 0,04(mts.)
Total = 1,5386 lts.

Cálculo de la fuerza de empuje

Empuje = π x r² x presión(bar)
Ejemplo = Cilindro 40-70/80
3.14 x 3.5² x 150(bar)
Total = 5.769,75 Kgs.

Cálculo de la fuerza de tracción

Empuje = π x r² x presión(bar)
Ejemplo = Cilindro 40-70/80
Calcular área vástago: 3.14 x 2.0² =12,56
Calcular área tubo: 3.14 x 3.5² = 38,465
Restar áreas: 38,465-12,56 = 25,905.
Fuerza: 25,905 x 150(bar)= 3.885,79 Kgs.

Pandeo
Buckling

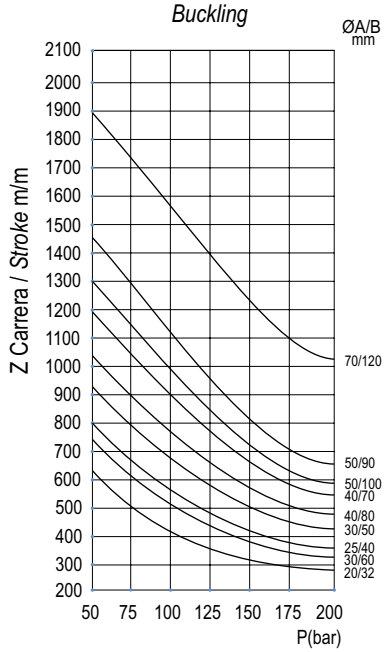

Fuerza de empuje
Upward thrust

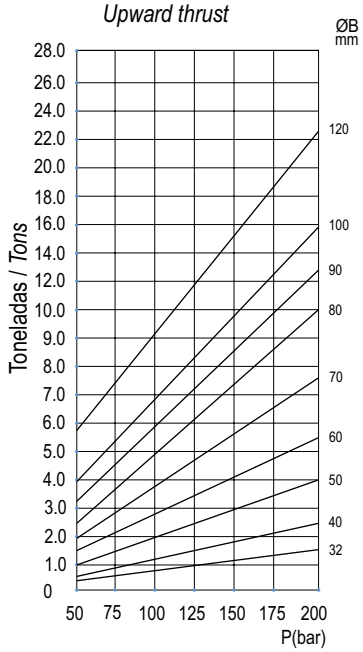

Fuerza de tracción
Tractive effort

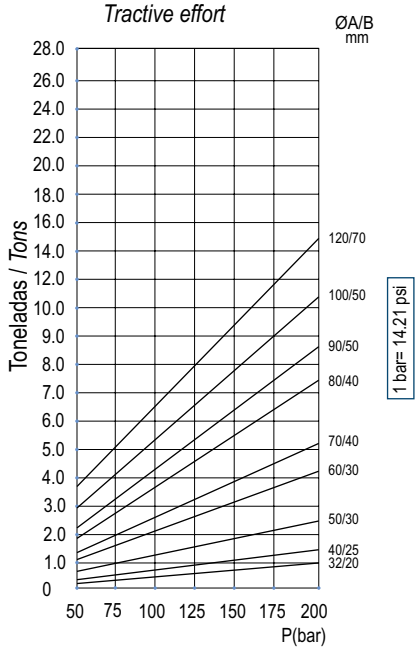

50% OFF ALL PRICES

SERIES 200 - DOUBLE ACTING HYDRAULIC CYLINDER FLOWFIT

Order Code	ØA	Z Carrera *Stroke*	E	B	C	D	H	T	J	R	S	P	Volume Litres	Weight Kgs	Price
200/010	20	100	255	32	40	16.25	46	10	30	35	33	1/4"	0.10	2.00	£83.38
200/020		200	355										0.17	2.60	£90.87
200/030		300	455										0.25	3.20	£95.64
201/020	25	200	370	40	50	20.50	30	16	35	40	42	3/8"	0.25	3.80	£98.59
201/030		300	470										0.40	4.80	£106.20
201/040		400	570										0.55	5.80	£113.82
201/050		500	670										0.60	6.80	£121.47
201/060		600	770										0.75	7.80	£129.04
201/070		700	870										0.90	8.80	£136.69
202/020	30	200	400	50	60	25.50	47	20	40	45	43	3/8"	0.39	5.84	£121.21
202/030		300	500										0.59	7.06	£130.85
202/040		400	600										0.79	8.28	£140.46
202/050		500	700										0.98	9.50	£150.09
202/060		600	800										1.18	10.72	£159.74
202/070		700	900										1.37	11.94	£169.34
203/020		200	400	60	70		46				47	3/8"	0.57	7.08	£138.20
203/030		300	500										0.85	8.46	£148.35
203/040		400	600										1.13	9.84	£158.52
203/050		500	700										1.41	11.22	£168.68
203/060		600	800										1.70	12.60	£178.81
203/070		700	900										1.98	13.98	£188.92
204/020	40	200	410	70	80	30.50	34	26	50	55	51	3/8"	0.77	10.39	£175.09
204/030		300	510										1.15	12.22	£189.67
204/040		400	610										1.54	14.05	£204.28
204/050		500	710										1.92	15.88	£218.90
204/060		600	810										2.31	17.71	£233.48
204/070		700	910										2.69	19.54	£248.05
205/020		200	410	80	90		21				56	3/8"	1.01	12.10	£216.56
205/030		300	510										1.51	14.10	£233.60
205/040		400	610										2.01	16.10	£250.68
205/050		500	710										2.51	18.10	£270.87
205/060		600	810										3.02	20.10	£284.72
205/070		700	910										3.52	22.10	£301.74
206/020	50	200	425	90	100		28		60	70	60	3/8"	1.27	15.15	£262.13
206/030		300	525										1.91	18.15	£295.23
206/040		400	625										2.54	21.15	£324.76
206/050		500	725										3.17	24.15	£360.32
206/060		600	825										3.80	27.15	£394.34
206/070		700	925										4.43	30.15	£427.35
207/030		300	525	100	115		25				67	1/2"	2.36	27.60	£336.53
207/040		400	625										3.14	30.80	£363.99
207/050		500	725										3.94	34.00	£391.34
207/060		600	825										4.74	37.20	£422.44
207/070		700	925										5.54	40.40	£446.20
208/040	70	400	710	120	140	40.50	39	30	80	80	67	1/2"	4.23	55.00	£POA
208/050		500	810										5.65	62.50	£POA
208/060		600	910										7.07	70.00	£POA
208/070		700	1010										8.49	77.50	£POA

* Unidades en milimetros.
Units in milimeters.

SERIES 300 - DOUBLE ACTING HYDRAULIC CYLINDER (NO ENDS)

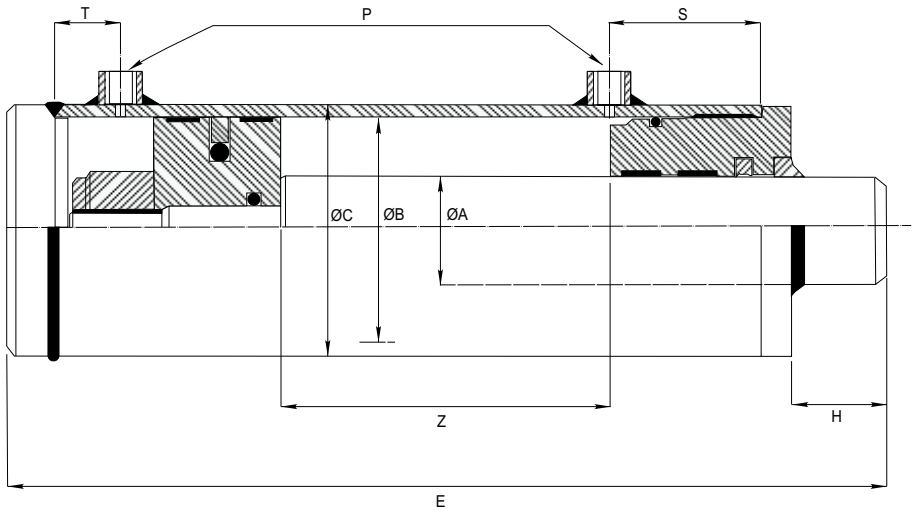

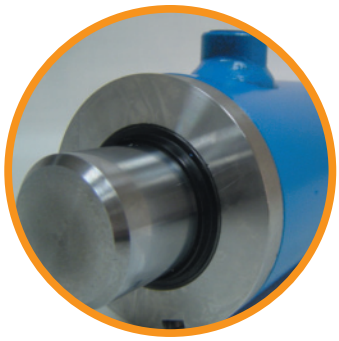

Presión de trabajo: 180 bars.
Velocidad: 0.5 m/s.
Temperatura de trabajo: -25ºC - +80ºC
Aceite: Aceite mineral
Vástago: C45 f7 25 micras.
Tubo: St52.3 Din2393 Iso H9

Working pressure: 180 bars.
Speed: 0.5 m/s.
Working temperature: -25ºC - +80ºC.
Oil: Mineral oil.
Rod: C45 f7 25 microns.
Tube: St52.3 Din2393 Iso H9

Cálculo del volumen de un cilindro

Volumen = π x r² x h(altura)
Ejemplo = Cilindro 40-70/80-400(mm.)
3.14 x 3.5² x 0,04(mts.)
Total = 1,5386 lts.

Cálculo de la fuerza de empuje

Empuje = π x r² x presión(bar)
Ejemplo = Cilindro 40-70/80
3.14 x 3.5² x 150(bar)
Total = 5.769,75 Kgs.

Cálculo de la fuerza de tracción

Empuje = π x r² x presión(bar)
Ejemplo = Cilindro 40-70/80
Calcular área vástago: 3.14 x 2.0² =12,56
Calcular área tubo: 3.14 x 3.5² = 38,465
Restar áreas: 38,465-12,56 = 25,905.
Fuerza: 25,905 x 150(bar)= 3.885,79 Kgs.

Pandeo
Buckling

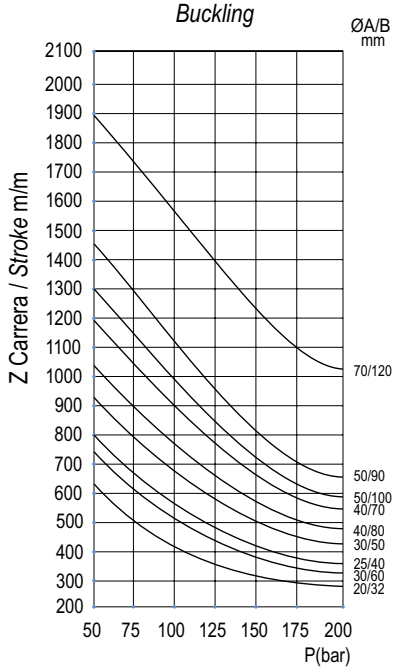

Fuerza de empuje
Upward thrust

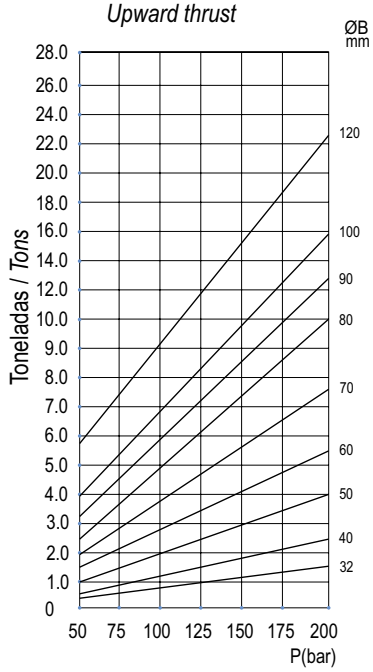

Fuerza de tracción
Tractive effort

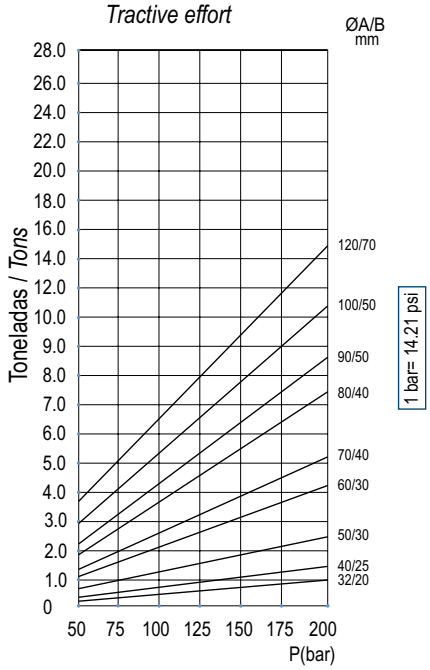

50% OFF ALL PRICES

SERIES 300 - DOUBLE ACTING HYDRAULIC CYLINDER (NO ENDS) FLOWFIT

Order Code	ØA	Z Carrera *Stroke*	E	B	C	H	T	S	P	Vol. (litros) *(liters)*	Peso *Weight* Kgs.	Price
300/010	20	100	233	32	40	46	10	33	1/4"	0.10	1.90	£61.13
300/020		200	333							0.16	2.50	£66.88
300/030		300	433							0.24	3.10	£72.59
301/020	25	200	345	40	50	30	16	42	3/8"	0.25	3.50	£78.93
301/030		300	445							0.38	4.50	£86.55
301/040		400	545							0.50	5.50	£94.17
301/050		500	645							0.69	6.50	£105.07
301/060		600	745							0.76	7.50	£112.85
301/070		700	845							0.88	8.50	£153.58
302/020	30	200	370	50	60	47	20	43	3/8"	0.39	4.90	£94.69
302/030		300	470							0.59	6.20	£107.73
302/040		400	570							0.79	7.50	£113.88
302/050		500	670							0.98	8.80	£128.22
302/060		600	770							1.18	10.10	£138.52
302/070		700	870							1.37	11.40	£155.69
303/020		200	371	60	70	46		47	3/8"	0.57	6.20	£109.20
303/030		300	471							0.85	7.50	£119.37
303/040		400	571							1.13	8.90	£129.52
303/050		500	671							1.41	10.30	£139.70
303/060		600	771							1.70	11.60	£149.85
303/070		700	871							1.98	13.00	£168.29
304/020	40	200	371	70	80	34	26	51	3/8"	0.77	8.70	£139.96
304/030		300	471							1.15	10.60	£154.58
304/040		400	571							1.54	12.60	£169.20
304/050		500	671							1.92	14.50	£183.84
304/060		600	771							2.31	16.40	£198.40
304/070		700	871							2.69	18.30	£226.06
305/020		200	371	80	90	21		56	3/8"	1.01	11.60	£172.38
305/030		300	471							1.51	13.80	£190.37
305/040		400	571							2.01	16.10	£208.47
305/050		500	671							2.51	18.40	£226.45
305/060		600	771							3.02	20.60	£244.52
305/070		700	871							3.52	22.90	£277.84
306/020	50	200	382	90	100	28		60	3/8"	1.27	14.10	£219.05
306/030		300	482							1.91	17.05	£251.44
306/040		400	582							2.54	20.10	£282.87
306/050		500	682							3.17	23.15	£314.81
306/060		600	782							3.80	26.20	£346.73
306/070		700	882							4.43	29.35	£378.66
307/030		300	487	100	115	25		67	1/2"	2.36	23.90	£328.03
307/040		400	587							3.14	27.40	£362.59
307/050		500	687							3.94	30.90	£404.56
307/060		600	787							4.74	34.50	£452.17
307/070		700	887							5.54	38.00	£488.82
308/040	70	400	655	120	140	39	30	67	1/2"	4.23	50.10	£POA
308/050		500	755							5.65	57.25	£POA
308/060		600	855							7.07	64.50	£POA
308/070		700	955							8.49	71.80	£POA

* Unidades en milimetros.
Units in milimeters.

SERIES 400 - DOUBLE ACTING HYDRAULIC CYLINDER

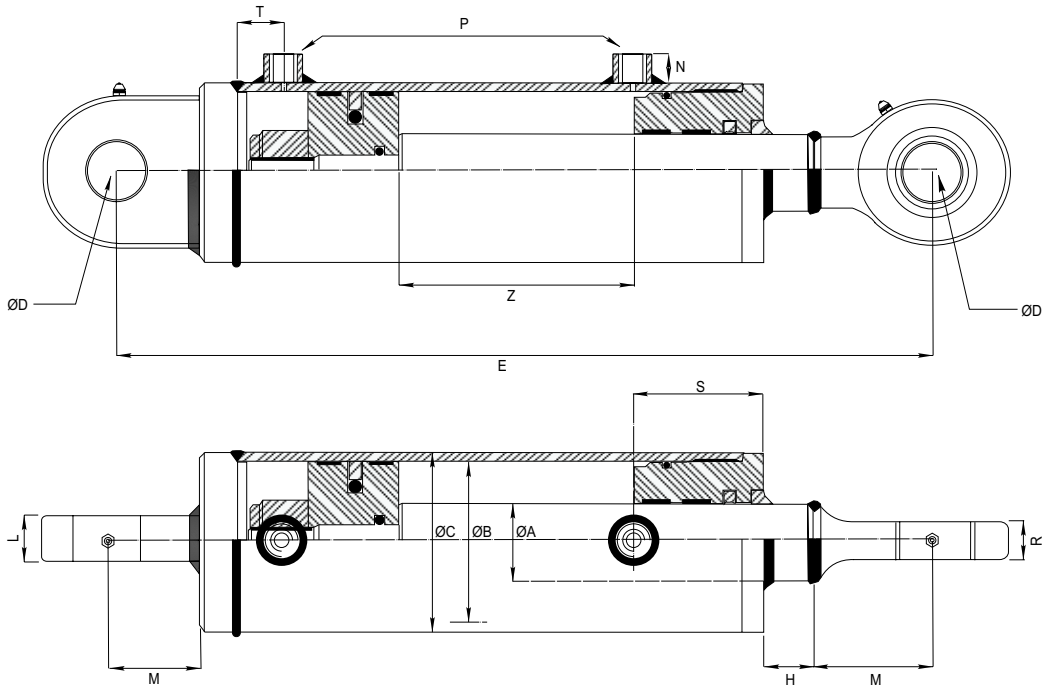

Presión de trabajo: 180 bars.
Velocidad: 0.5 m/s.
Temperatura de trabajo: -25ºC - +80ºC
Aceite: Aceite mineral
Vástago: C45 f7 25 micras.
Tubo: St52.3 Din2393 Iso H9

Working pressure: 180 bars.
Speed: 0.5 m/s.
Working temperature: -25ºC - +80ºC.
Oil: Mineral oil.
Rod: C45 f7 25 microns.
Tube: St52.3 Din2393 Iso H9

Opción: Kit válvula antirretorno doble pilotada (VADP008EX).
Rótulas Serie TAC y TPN soldadas.

Option: Dual pilot operated check valve set. (VADP008EX).
TAC and TPN series welded ball joints.

Pandeo
Buckling

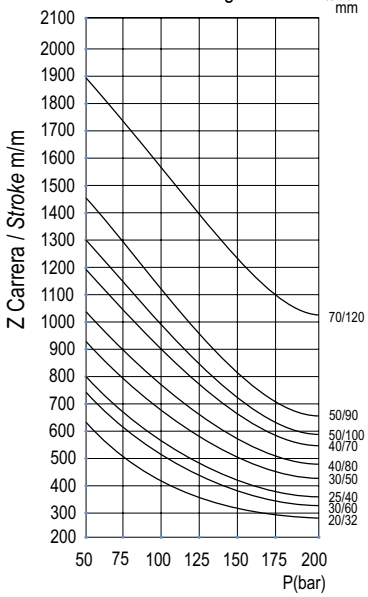

Fuerza de empuje
Upward thrust

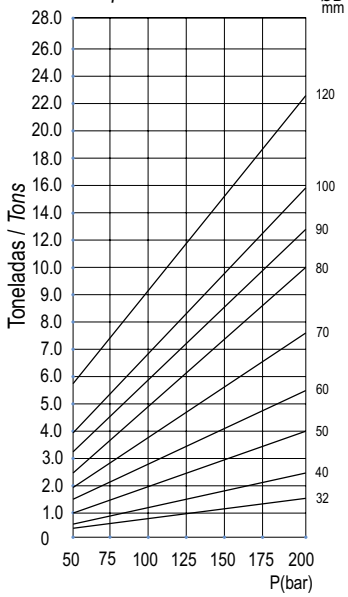

Fuerza de tracción
Tractive effort

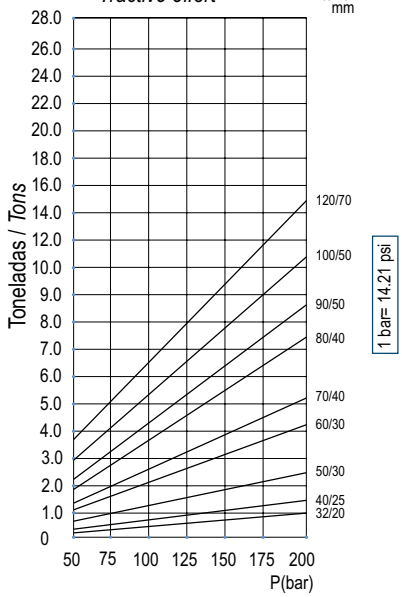

50% OFF ALL PRICES

SERIES 400 - DOUBLE ACTING HYDRAULIC CYLINDER

Order Code	ØA	Z Carrera *Stroke*	E	B	C	D	H	T	N	L	S	M	R	P	Vol. (litros) *(liters)*	Peso *Weight* Kgs.	Price
400/010	20	100	280	32	40	20.00 $^{+0.02}_{-0.00}$	14	10	16	19	33	38	16	1/4"	0.10	2.50	£106.15
400/020		200	380												0.16	3.10	£118.29
400/030		300	480												0.24	3.70	£130.38
401/020	25	200	410	40	50	20.00 $^{+0.02}_{-0.00}$	19	16	16	19	42	38	16	3/8"	0.25	4.10	£154.30
401/030		300	510												0.38	5.10	£172.99
401/040		400	610												0.50	6.10	£196.97
401/050		500	710												0.69	7.10	£210.38
401/060		600	810												0.76	8.10	£229.08
401/070		700	910												0.88	9.10	£252.52
402/020	30	200	430	50	60	25.00 $^{+0.02}_{-0.00}$	17	20	16	23	43	45	20	3/8"	0.39	5.90	£163.17
402/030		300	530												0.59	7.20	£182.91
402/040		400	630												0.79	8.50	£202.04
402/050		500	730												0.98	9.80	£229.53
402/060		600	830												1.18	11.10	£240.25
402/070		700	930												1.37	12.40	£259.36
403/020		200	430	60	70		15				47			3/8"	0.57	7.20	£179.25
403/030		300	530												0.85	8.50	£200.19
403/040		400	630												1.13	9.80	£221.25
403/050		500	730												1.41	11.10	£242.02
403/060		600	830												1.70	12.40	£262.95
403/070		700	930												1.98	13.70	£283.93
404/020	40	200	465	70	80	30.00 $^{+0.02}_{-0.00}$	26	26	16	28	51	51	22	3/8"	0.77	10.25	£245.05
404/030		300	565												1.15	12.15	£274.72
404/040		400	665												1.54	14.05	£302.97
404/050		500	765												1.92	15.95	£328.89
404/060		600	865												2.31	17.85	£359.38
404/070		700	965												2.69	19.75	£387.60
405/020		200	465	80	90		13				56			3/8"	1.01	13.15	£309.97
405/030		300	565												1.51	15.35	£342.90
405/040		400	665												2.01	17.55	£376.02
405/050		500	765												2.51	19.75	£409.01
405/060		600	865												3.02	21.95	£442.03
405/070		700	965												3.52	24.15	£475.05
406/020	50	200	510	90	100	40.00 $^{+0.02}_{-0.00}$	18	26	16	35	60	69	28	3/8"	1.27	17.80	£427.93
406/030		300	610												1.91	20.75	£459.66
406/040		400	710												2.54	23.70	£494.95
406/050		500	810												3.17	26.65	£507.15
406/060		600	910												3.80	29.60	£571.99
406/070		700	1010												4.43	32.55	£626.96
407/030		300	615	100	115		15		20		67			1/2"	2.36	27.60	£603.07
407/040		400	715												3.14	31.10	£653.99
407/050		500	815												3.94	34.60	£667.14
407/060		600	915												4.74	38.10	£743.64
407/070		700	1015												5.54	41.60	£814.59
408/040	70	400	770	120	140	50.00 $^{+0.02}_{-0.00}$	17	30		40	67	88	35	1/2"	4.23	57.00	£912.24
408/050		500	870												5.65	64.15	£979.42
408/060		600	970												7.07	71.30	£1,178.80
408/070		700	1070												8.49	78.45	£1,412.85

* Unidades en milímetros.
Units in milimeters.

SERIES 500 - DOUBLE ACTING HYDRAULIC CYLINDER (FRONT FLANGE)

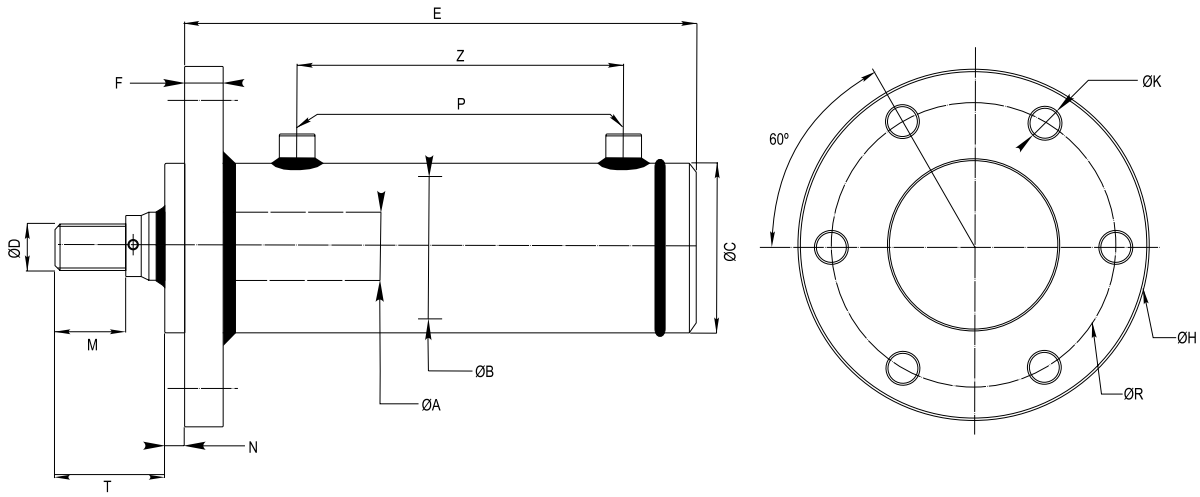

Opción: Para trabajos intensivos, es posible sustituir la estanqueidad, por juntas de baja fricción, y alta presión de trabajo.

Option: For intensive work, leakage can be replace by low friction joints and high pressure.

Order Code	ØA	Z Carrera *Stroke*	E	B	C	D	H	T	M	N	K	F	R	P	Price
500/Z	20	50-2000	79+Z	32	40	M14X1.5	80	35	18	8	7	10	67	1/4"	£POA
501/Z	20		108+Z	40	50	M16X1.5	100	40	22	7	9	12	82	3/8"	£POA
502/Z	25														
503/Z	25		115+Z	50	60	M20X1.5	125	48	28	8	11	12	103	3/8"	£POA
504/Z	30														
505/Z	35														
506/Z	30		117+Z	60	70	M27X2.0	145	58	36	8	13	12	120	3/8"	£POA
507/Z	35														
508/Z	40														
509/Z	35		127+Z	70	80	M27X2.0	160	58	36	10	15	15	130	3/8"	£POA
510/Z	40														
511/Z	45														
512/Z	50														
513/Z	35		140+Z	80	90	M33X2.0	170	68	45	10	15	15	142	3/8"	£POA
514/Z	40														
515/Z	45														
516/Z	50														
517/Z	40		144+Z	90	100	M33X2.0	202	68	45	10	17	15	170	3/8"	£POA
518/Z	45														
519/Z	50														
520/Z	50		147+Z	100	115	M42X2.0	202	85	56	15	17	15	170	1/2"	£POA
521/Z	60														
522/Z	70														
523/Z	60		201+Z	120	140	M48X2.0	250	92	63	15	21	30	210	1/2"	£POA
524/Z	70														
525/Z	80														
526/Z	70		201+Z	130	150	M64X2.0	280	120	85	15	21	30	230	3/4"	£POA
527/Z	80														
528/Z	90														

* Unidades en milímetros.
Units in milimeters.

50% OFF ALL PRICES

SERIES 590 - TURN-OVER PLOUGH CYLINDER

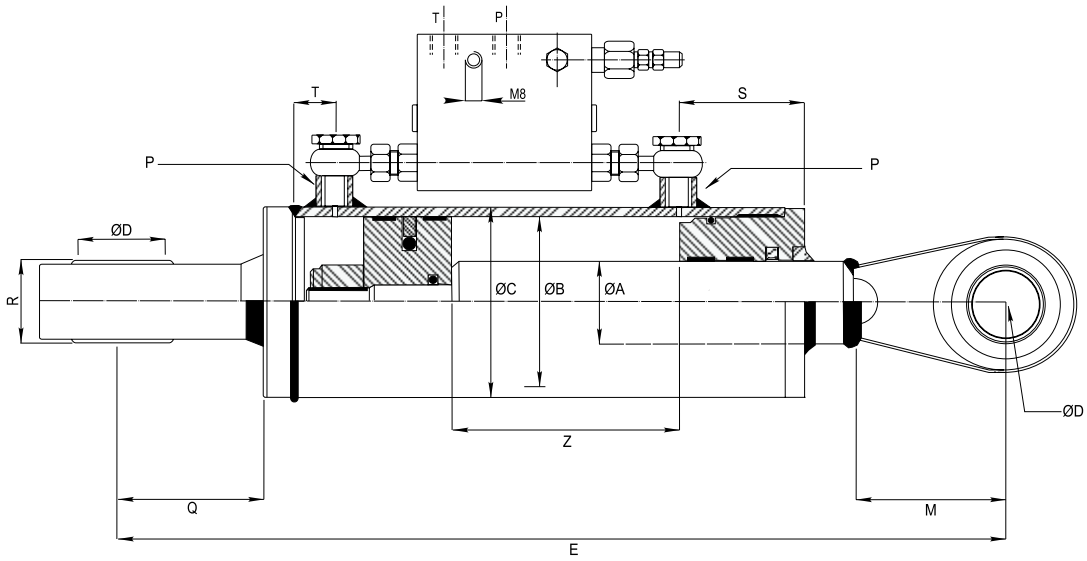

Esquema hidráulico válvula
Hydraulic valve diagram

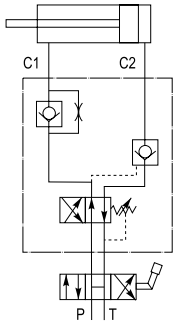

Funcionamiento: Pueden ser montados en circuitos tanto de simple como de doble efecto. Están provistas de rótulas TAC y TPN para un montaje más sencillo.

Operation: Can be mounted on a circuit of single and double acting. It is equipped whit TAC and TPN ball joints for easier mounting.

Referencia válvula volteo arado : VSEB03802. (Montaje en tubo Din2353).

Reference of the turn-over plough valve: VSEB03802.(Mounting in pipe Din2353).

Order Code	ØA	Z Carrera *Stroke*	E	B	C	D	Q	M	S	R	P	T	Vol. (litros) *(liters)*	Peso *Weight* Kgs.	Price
591/016	30	160	400	50	60	30.2	51	51	43	28	3/8"	20	0.30	**8.50**	£740.42
592/016	40			70	80				51				0.60	11.80	£793.54
593/016	40			80	90				56				0.85	13.20	£805.91

* Unidades en milímetros.
Units in milimeters.

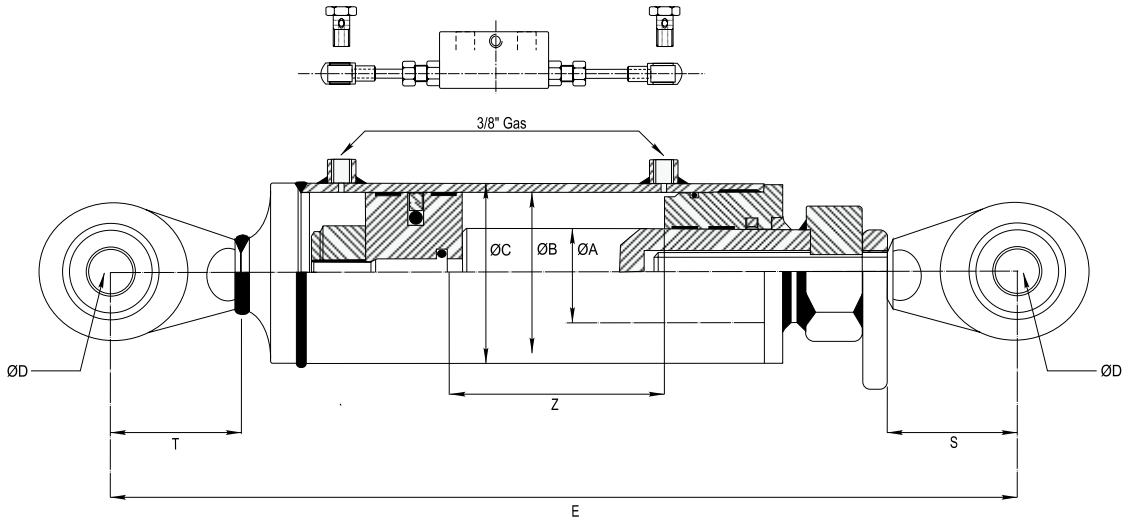

Opción 1ª: Kit válvula antirretorno doble pilotada (VADP008EX). Longitud entre centros ajustable .

Opción 2ª: Posibilidad de cambiar la rótula agrícola estándar del vástago por enganche rápido. (Cat.2).

Option 1st: Dual pilot operated check valve set. (VADP008EX). Adjustable lenght between centers.

Option 2nd: Ability to change the standard ball joint for rapid hook in the rod. (Cat.2).

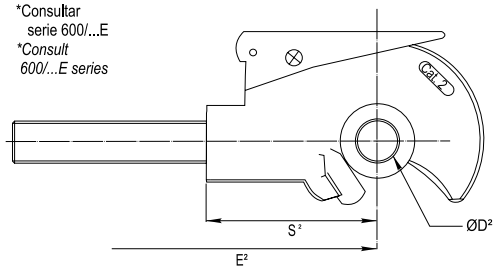

Presión de trabajo: 180 bars.
Velocidad: 0.5 m/s.
Temperatura de trabajo: -25ºC - +80ºC
Aceite: Aceite mineral
Vástago: C45 f7 25 micras.
Tubo: St52.3 Din2393 Iso H9

Working pressure: 180 bars.
Speed: 0.5 m/s.
Working temperature: -25ºC - +80ºC.
Oil: Mineral oil.
Rod: C45 f7 25 microns.
Tube: St52.3 Din2393 Iso H9

Order Code	ØA	Z Carrera *Stroke*	E	E²	B	C	D	D²	S	S²	T	Vol. (litros) (liters)	Peso *Weight* Kgs.	Price
600/020	40	200	510		60	70	25.40		55		65	0.60	11.50	£236.13
600/025		250	560									0.75	12.50	£249.74
600/030		300	610									0.90	13.50	£263.35
601/020	45	200	530		70	80					70	0.80	14.00	£269.32
601/025		250	580									1.05	15.00	£289.91
601/030		300	630									1.25	16.00	£320.97
600/020E	40	200		560	60	70		19.30		105	65	0.60	13.50	£341.62
600/025E		250		610				22.40				0.75	14.50	£352.26
600/030E		300		660				25.40				0.90	15.50	£373.90
601/020E	45	200		580	70	80		30.40			70	0.80	16.00	£382.38
601/025E		250		630				28.40				1.05	17.00	£420.76
601/030E		300		680				32.40				1.25	18.00	£451.75

* Unidades en milímetros.
Units in milimeters.

SERIES 610 - HYDRAULIC TOP LINK (FIXED)

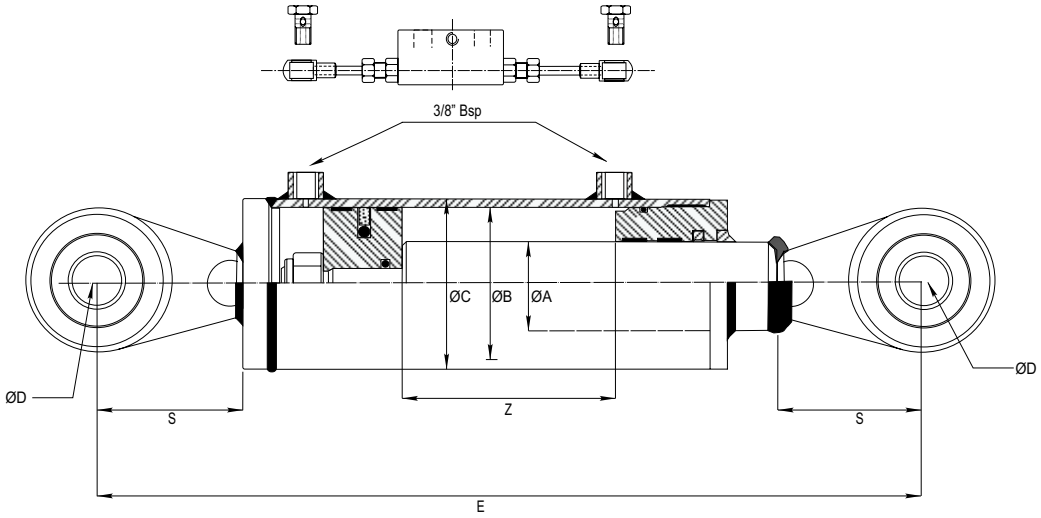

Presión de trabajo: 180 bars.
Velocidad: 0.5 m/s.
Temperatura de trabajo: -25ºC - +80ºC
Aceite: Aceite mineral
Vástago: C45 f7 25 micras.
Tubo: St52.3 Din2393 Iso H9

Working pressure: 180 bars.
Speed: 0.5 m/s.
Working temperature: -25ºC - +80ºC.
Oil: Mineral oil.
Rod: C45 f7 25 microns.
Tube: St52.3 Din2393 Iso H9

Opción : Kit válvula antirretorno doble pilotada (VADP008EX).
Rótulas soldadas.

Option : Dual pilot operated check valve set. (VADP008EX).
Ball joints welded.

Order Code	ØA	Z Carrera *Stroke*	E	B	C	ØD	S	Vol. (litros) *(liters)*	Peso *Weight* Kgs.	Price
610/016	30	160	416	50	60	19.30	60	0.32	5.60	£160.52
610/021		210	466			19.30		0.42	6.20	£170.47
610/028		280	536			19.30		0.56	7.10	£185.16
610/040		400	656			19.30		0.80	8.50	£215.47
610/016A		160	426			25.40	65	0.32	6.30	£160.52
610/021A		210	476			25.40		0.42	6.90	£170.47
610/028A		280	546			25.40		0.56	7.90	£185.16
610/040A		400	666			25.40		0.80	9.20	£215.47
611/016	35	160	440	60	70	25.40		0.48	7.80	£181.27
611/021		210	490			25.40		0.63	8.60	£193.88
611/028		280	560			25.40		0.84	9.60	£211.64
611/040		400	680			25.40		1.20	15.60	£242.02
612/016	40	160	461	80	90	25.40	70	0.90	12.50	£237.71
612/021		210	511			25.40		1.20	13.70	£254.14
612/028		280	581			25.40		1.60	15.20	£280.36
612/040		400	701			25.40		2.20	18.00	£293.06

* Unidades en milímetros.
Units in milimeters.

SERIES 620 - HYDRAULIC TOP LINK (RAPID HOOK)

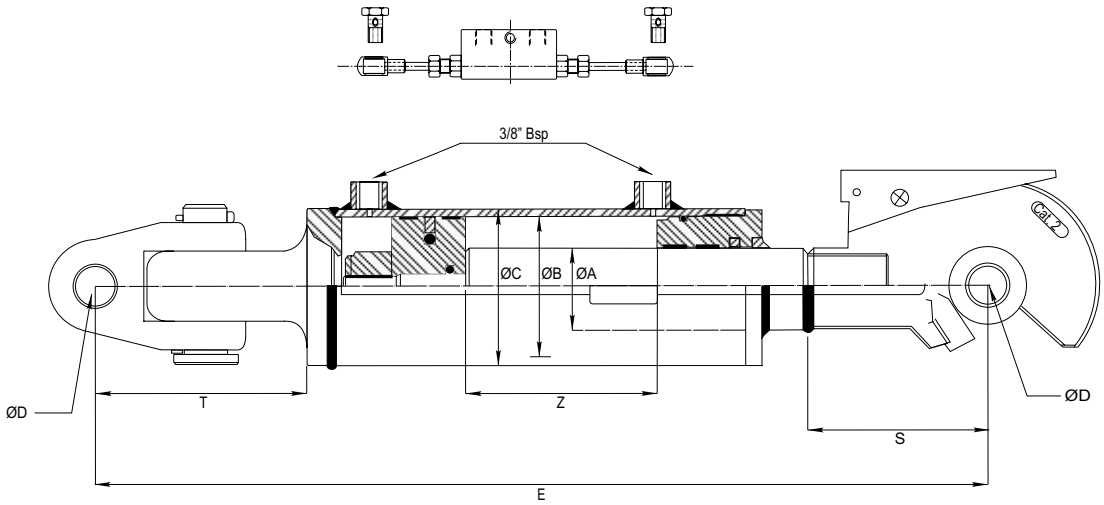

Presión de trabajo: 180 bars.
Velocidad: 0.5 m/s.
Temperatura de trabajo: -25ºC - +80ºC
Aceite: Aceite mineral
Vástago: C45 f7 25 micras.
Tubo: St52.3 Din2393 Iso H9

Working pressure: 180 bars.
Speed: 0.5 m/s.
Working temperature: -25ºC - +80ºC.
Oil: Mineral oil.
Rod: C45 f7 25 microns.
Tube: St52.3 Din2393 Iso H9

Opción : Kit válvula antirretorno doble pilotada (VADP008EX).
Rótulas soldadas.

Option : Dual pilot operated check valve set. (VADP008EX).
Ball joints welded.

Order Code	ØA	Z Carrera *Stroke*	E	B	C	ØD	S	Categoría *Range*	T	Vol. (Litros) (Liters)	Peso *Weight* Kgs.	Price
620/020	35	200	550	60	70	19.40	105	Cat.2	95	0.55	12.50	£350.66
620/025		250	600			20.40				0.70	13.50	£366.36
621/020		200	550	70	80	22.40				0.95	14.00	£393.28
621/025		250	600							1.15	15.50	£383.62
622/020	40	200	600	80	95	25.40	132	Cat.3		1.10	18.00	£513.86
622/025		250	650			28.40				1.35	20.00	£523.46
623/020		200	600	90	105	30.40				1.30	19.50	£538.43
623/025		250	650							1.65	22.00	£551.93
624/020	45	200	600	100	115	32.40				1.55	22.50	£590.85
624/025		250	650							1.90	25.50	£615.33

* Unidades en milímetros.
Units in milimeters.

50% OFF ALL PRICES

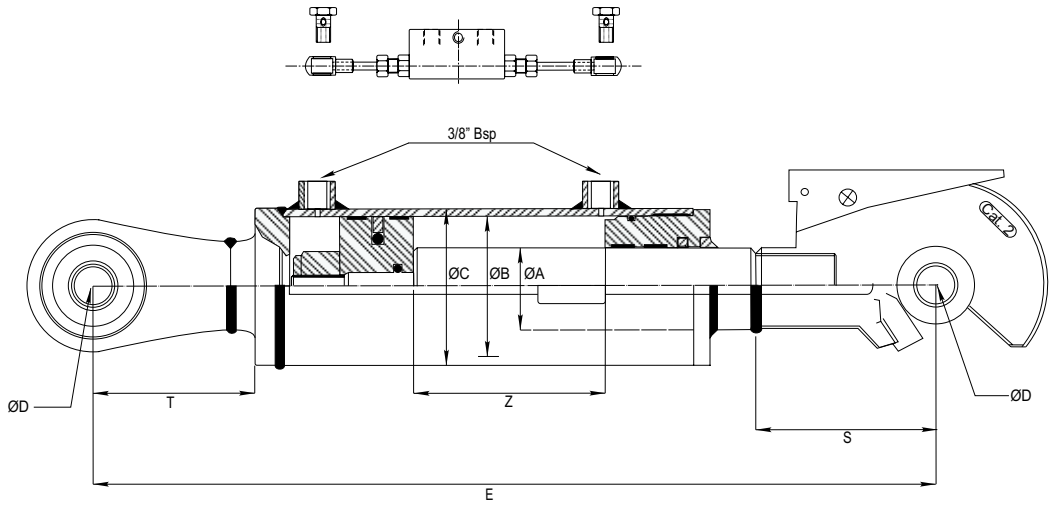

Presión de trabajo: 180 bars.
Velocidad: 0.5 m/s.
Temperatura de trabajo: -25ºC - +80ºC
Aceite: Aceite mineral
Vástago: C45 f7 25 micras.
Tubo: St52.3 Din2393 Iso H9

Working pressure: 180 bars.
Speed: 0.5 m/s.
Working temperature: -25ºC - +80ºC.
Oil: Mineral oil.
Rod: C45 f7 25 microns.
Tube: St52.3 Din2393 Iso H9

Opción : Kit válvula antirretorno doble pilotada (VADP008EX).
Rótulas y engache rápido soldados.

Option : Dual pilot operated check valve set. (VADP008EX).
Ball joints and rapid hook welded.

Order Code	ØA	Z Carrera *Stroke*	E	B	C	D	S	Categoría *Range*	T	Vol. (Litros) (Liters)	Peso *Weight* Kgs.	Price
630/020	35	200	550	60	70	19.40	105	Cat.2	95	1.00	10.00	£321.60
630/025		250	600							1.00	10.00	£333.40
631/020		200	550	70	80	20.40				1.00	10.00	£339.96
631/025		250	600			22.40				1.00	10.00	£354.23
632/020	40	200	600	80	95	25.40	132	Cat.3		1.00	10.00	£467.85
632/025		250	650			28.40				1.00	10.00	£487.81
633/020		200	600	90	105	30.40				1.00	10.00	£492.17
633/025		250	650							1.00	10.00	£511.68
634/020	45	200	600	100	115	32.40				1.00	10.01	£543.22
634/025		250	650							1.00	10.01	£567.53

* Unidades en milímetros.
** Units in milimeters.*

SERIES 640 - HYDRAULIC TOP LINK (ADJUSTABLE BALL JOINT)

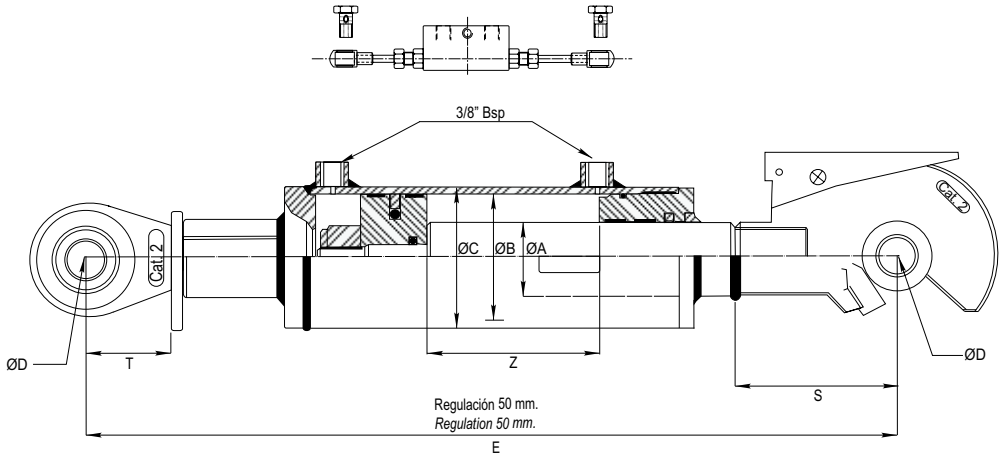

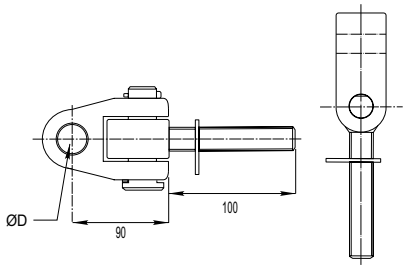

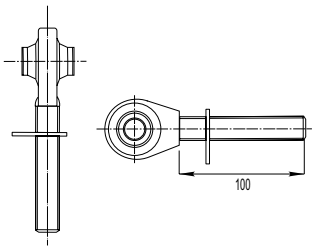

Opción 1ª : Cruceta articulada.
Option 1st : Articulated yoke.

Opción 2ª : Rótula articulada.
Option 2nd : Ball joint.

Presión de trabajo: 180 bars.
Velocidad: 0.5 m/s.
Temperatura de trabajo: -25ºC - +80ºC
Aceite: Aceite mineral
Vástago: C45 f7 25 micras.
Tubo: St52.3 Din2393 Iso H9

Working pressure: 180 bars.
Speed: 0.5 m/s.
Working temperature: -25ºC - +80ºC.
Oil: Mineral oil.
Rod: C45 f7 25 microns.
Tube: St52.3 Din2393 Iso H9

Opción : Kit válvula antirretorno doble pilotada (VADP008EX).
Enganche rápido soldado y rótula ajustable trasera / cruceta.

Option : Dual pilot operated check valve set. (VADP008EX).
Rapid hook welded and adjustable ball joint / articulated yoke.

Order Code	ØA	Z Carrera *Stroke*	E	B	C	D	S	Categoría *Range*	T	Vol. (Litros) (Liters)	Peso *Weight Kgs.*	Price
640/021	30	210	610	50	60	19.40	105	Cat.2	100	1.00	10.00	£POA
641/021	35		610	60	70	22.40	105	Cat.2		1.00	10.00	£POA
642/021	40		665	80	95	25.40	132	Cat.3		1.00	10.00	£POA
640/021C	30		645	50	60	30.40	105	Cat.2		1.00	10.00	£POA
641/021C	35		645	60	70	28.40	105	Cat.2		1.00	10.00	£POA
642/021C	40		700	80	95	32.40	132	Cat.3		1.00	10.00	£POA

* Unidades en milímetros.
Units in milimeters.

50% OFF ALL PRICES

SERIES 650 - HYDRAULIC LEVELLING ARM

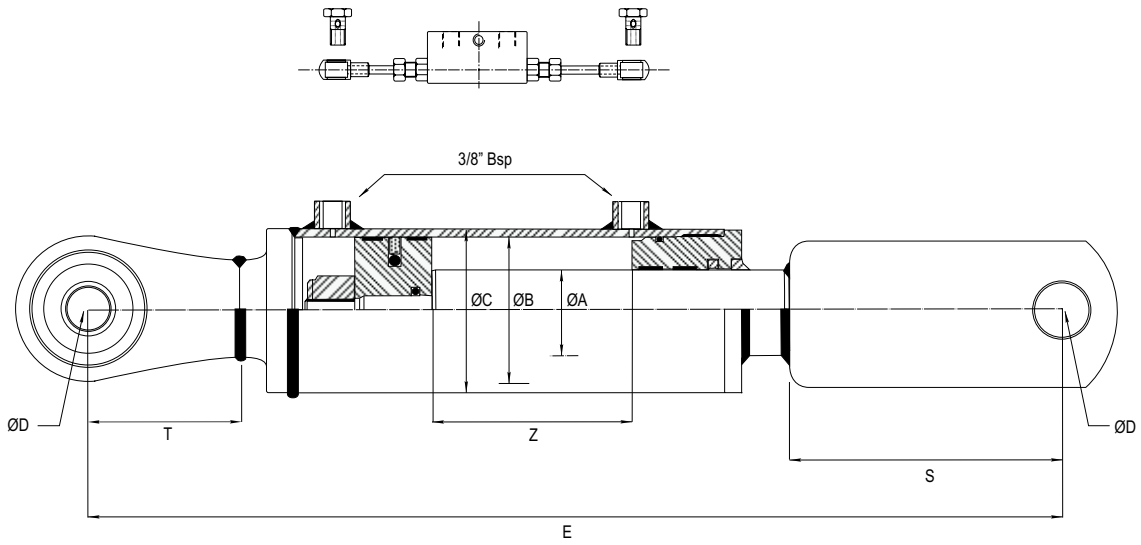

Presión de trabajo: 180 bars.
Velocidad: 0.5 m/s.
Temperatura de trabajo: -25ºC - +80ºC
Aceite: Aceite mineral
Vástago: C45 f7 25 micras.
Tubo: St52.3 Din2393 Iso H9

Working pressure: 180 bars.
Speed: 0.5 m/s.
Working temperature: -25ºC - +80ºC.
Oil: Mineral oil.
Rod: C45 f7 25 microns.
Tube: St52.3 Din2393 Iso H9

Opción : Kit válvula antirretorno doble pilotada (VADP008EX).
Option : Dual pilot operated check valve set. (VADP008EX).

Aplicación : John deere 36.50 - 40.50 - 40.55 - 42.50.
Aplication : John deere 36.50 - 40.50 - 40.55 - 42.50.

Order Code	ØA	Z Carrera *Stroke*	E	B	C	D	S	T	Vol. (Litros) (Liters)	Peso *Weight Kgs.*	Price
650/018	30	180	560	60	70	16.40	95	65	1.00	10.00	£POA
651/019	35	190	660	70	80	25.40	95	70	1.00	10.00	£POA
652/026	45	260	720	90	105	25.40	120	70	1.00	10.00	£POA

* Unidades en milimetros.
Units in milimeters.

SERIES 700 - BRAKE CYLINDER (SINGLE ACTING)

Standard Brake Cylinder

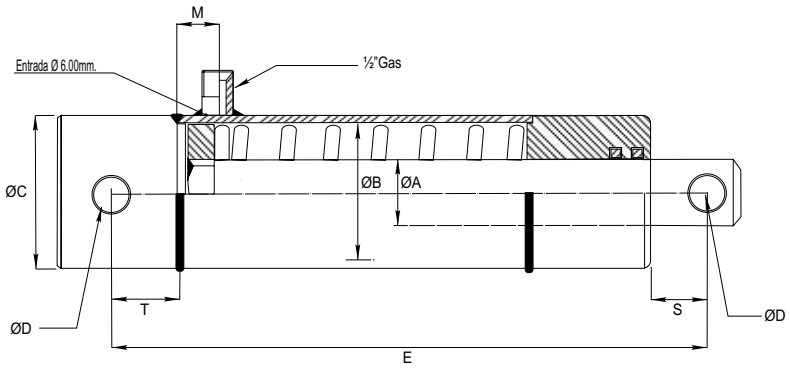

Order Code	ØA	Z Carrera *Stroke*	E	B	C	D	S	T	M	Vol. (Litros) (Liters)	Peso *Weight* Kgs.	Price
700/010	25	100	240	35	45	12.25	17	15	25	0.12	2.50	£58.15

* Unidades en milímetros.
Units in milimeters.

SERIES 710 - BRAKE CYLINDER (SINGLE ACTING)

Brake Cylinder (Boggie Type)

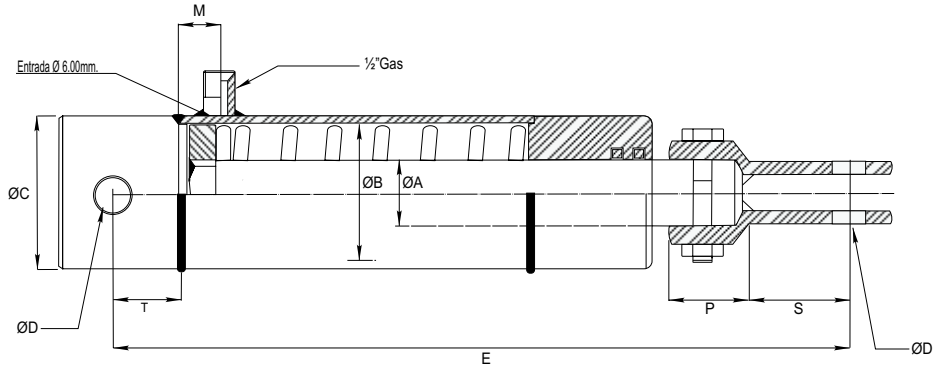

Order Code	ØA	Z Carrera *Stroke*	E	B	C	D	S	T	P	M	Vol. (Litros) (Liters)	Peso *Weight* Kgs.	Price
710/010	25	100	300	35	45	12.25	35	15	15	25	0.12	2.30	£POA

* Unidades en milímetros.
Units in milimeters.

50% OFF ALL PRICES

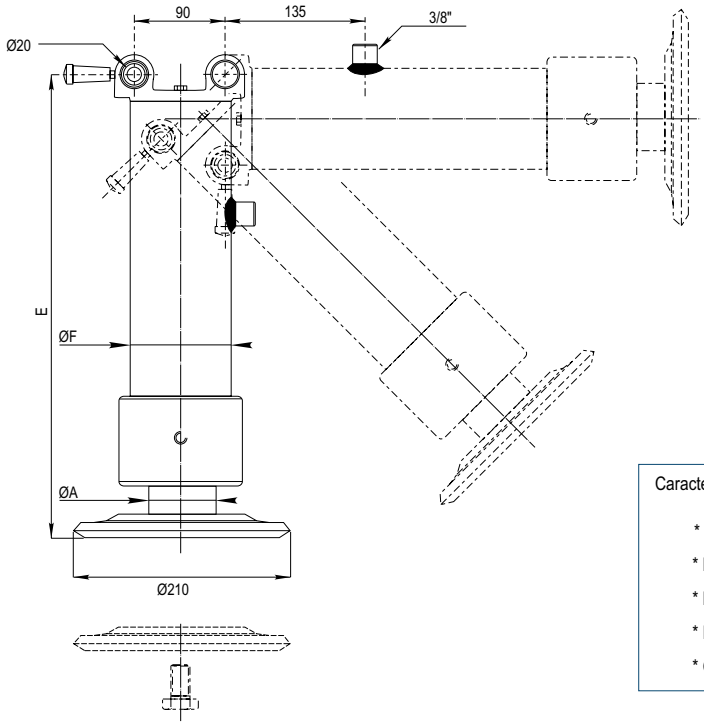

Características / *Features:*

* Cilindro escamoteable / *Retractable cylinder.*
* Retroceso por muelle / *Spring return.*
* Presión de trabajo: 180 bars / *Working pressure: 180 bars.*
* Fácil desmontaje / *Easy dissasembly.*
* Gran robustez / *Robust design.*

* Capacidad de elevación: (180bars).
* *Lifting capacity: (180bars).*

Serie 801 = 7 tons.

Serie 802 = 12 tons.

Order Code	ØA	Z Carrera *Stroke*	E	F	Vol. (Litros) (Liters)	Peso *Weight* Kgs.	Price
801/020	65	200	520	80	0.30	9.50	£POA
802/025	80	250	570	100	0.65	11.70	£POA

* Unidades en milímetros.
Units in milimeters.

Soporte basculante
Swivel bracket

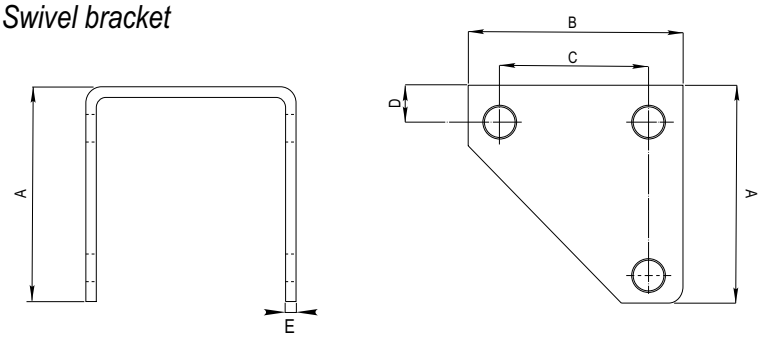

*Chapa tratada mediante zinc trivalente o similar.

*Acero en St52.3.

*Plate treated whit trivalent zinc or similar.

*Steel St52.3.

Order Code	A	B	C	D	E	Peso *Weight* Kgs.	Price
SPH142	142	140	90	40	7	2.65	£POA

* Unidades en milímetros.
Units in milimeters.

Standard bush

Order Code	ØD	ØB	T	L	ØR	Peso *Weight* Kgs.	Price
CRA0216	16	30	17.50	35	5.00	0.15	£3.33
CRA0220	20	35	20.00	40	7.00	0.20	£5.14
CRA0225	25	40	22.50	45	7.00	0.30	£7.49
CRA0230	30	50	27.50	55	7.00	0.55	£14.70
CRA0240	30	60	30.00	70	7.00	1.15	£21.30
CRA0250	40	80	40.00	80	8.50	2.35	£54.80
CRA0260	40	90	50.00	100	8.50	3.25	£88.84

* Unidades en milímetros.
Units in milimeters.

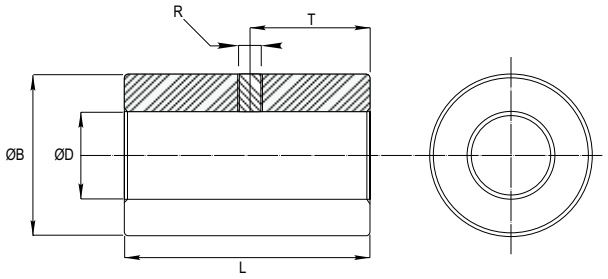

Material en St52.3 / *Material in St52.3.*
Otras medidas bajo pedido / *Others measures on request.*

End-plug With Hole

Order Code	ØD	ØB	ØK	L	T	S	N	Peso *Weight* Kgs.	Price
FT0114	14.25	40	32	35	17	32	3	0.45	£5.04
FT0116	16.25	40	32	35	17	32	3	0.40	£5.04
FT0216	16.25	50	40	44	22	41	3	0.85	£10.30
FT0220	20.50	50	40	44	22	41	3	0.75	£10.30
FT0320	20.50	55	45	44	22	41	3	1.05	£11.71
FT0420	20.50	60	50	50	25	47	3	1.35	£15.54
FT0425	25.50	60	50	50	25	47	3	1.20	£15.54
FT0525	25.50	65	55	50	25	47	3	1.40	£13.63
FT0625	25.50	70	60	50	25	47	3	1.65	£19.51
FT0725	25.50	75	65	58	29	55	3	2.05	£22.42
FT0830	30.50	80	70	58	29	55	3	2.40	£33.69
FT0930	30.50	90	80	58	29	55	3	3.10	£46.01
FT1030	30.50	95	80	58	29	55	3	3.80	£51.24
FT1130	30.50	100	90	60	29	57	3	3.90	£57.40
FT1230	30.50	105	90	60	29	57	3	4.80	£64.64
FT1330	30.50	115	100	66	29	60	6	5.60	£65.56
FT1440	40.50	140	120	82	35	76	6	9.40	£84.05
FT1560	60.50	150	130	108	50	100	8	13.50	£110.20

* Unidades en milímetros.
Units in milimeters.

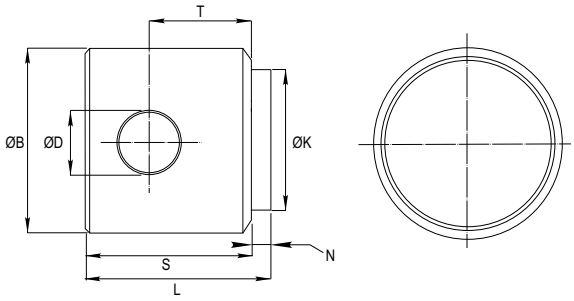

Material en St52.3 / *Material in St52.3.*
Otras medidas bajo pedido / *Others measures on request.*

Male Clevis

Order Code	ØD	M	T	L	R	Peso *Weight* Kgs.	Price
CRB0216	16	35	25	42	16	0.15	£POA
CRB0220	20	35	25	42	20	0.20	£POA
CRB0225	25	50	35	60	25	0.30	£POA
CRB0230	30	60	40	70	30	0.55	£POA
CRB0240	30	70	45	80	35	1.15	£POA
CRB0250	40	80	55	95	40	2.35	£POA

* Unidades en milímetros.
Units in milimeters.

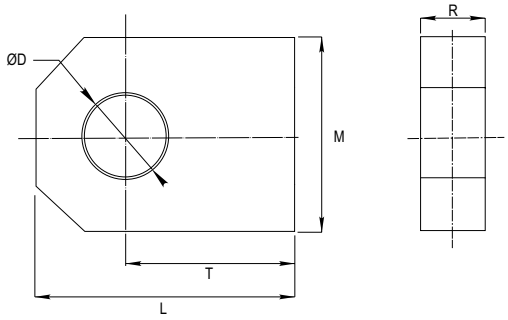

*Material en St52.3 / *Material in St52.3.*
/ Others measures on request.

Ball Joint TPR/N Din 648

Order Code	ØD	B	G	L	T	M	R	Peso *Weight* Kgs.	Price
TPR220N	20	56	41	78	50	M16X1.5	19	0.43	£POA
TPR225N	25	56	41	78	50	M16X1.5	23	0.48	£POA
TPR230N	30	64	46	92	60	M22X1.5	28	0.74	£POA
TPR235N	35	78	58	109	70	M28X1.5	30	1.20	£POA
TPR240N	40	94	66	132	85	M35X1.5	35	2.00	£POA
TPR250N	50	116	88	163	105	M45X1.5	40	3.80	£POA

* Unidades en milímetros.
Units in milimeters.

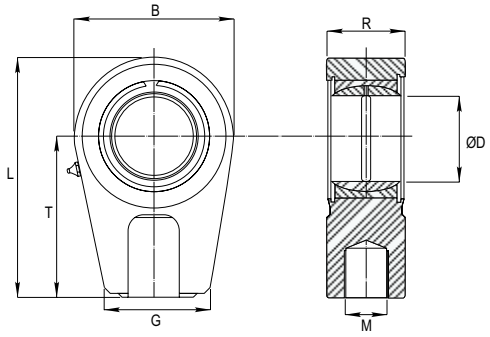

Superficie de contacto: acero/acero - *Contact surface: steel/steel.*
Equivalente / *Equivalent INA GIHR....DO*
Equivalente / *Equivalent SKF SIRD....ES*

Ball Joint TPR/U Din 648

Order Code	ØD	B	G	L	T	M	R	Peso *Weight* Kgs.	Price
TPR220U	20	56	41	78	50	M16X1.5	19	0.43	£POA
TPR225U	25	56	41	78	50	M16X1.5	23	0.48	£POA
TPR230U	30	64	46	92	60	M22X1.5	28	0.74	£POA
TPR235U	35	78	58	109	70	M28X1.5	30	1.20	£POA
TPR240U	40	94	66	132	85	M35X1.5	35	2.00	£POA
TPR250U	50	116	88	163	105	M45X1.5	40	3.80	£POA

* Unidades en milímetros.
Units in milimeters.

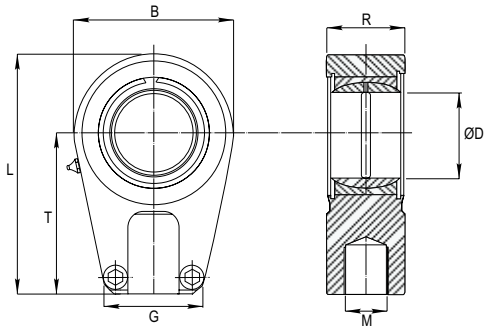

Superficie de contacto: acero/acero - *Contact surface: steel/steel.*
Equivalente / *Equivalent INA GIHR-K....DO*
Equivalente / *Equivalent SKF SIR....ES*

Radial Ball Joint GE

Order Code	ØD	ØB	G	L	Peso *Weight* Kgs.	Price
GE215X	15	26	11	13	0.03	£POA
GE220X	20	32	14	16	0.05	£POA
GE225X	25	42	18	21	0.12	£POA
GE230X	30	50	23	27	0.23	£POA
GE235X	35	55	26	30	0.30	£POA
GE240X	40	62	28	33	0.38	£POA
GE245X	45	72	31	36	0.60	£POA
GE250X	50	80	36	42	0.87	£POA

* Unidades en milímetros.
Units in milimeters.

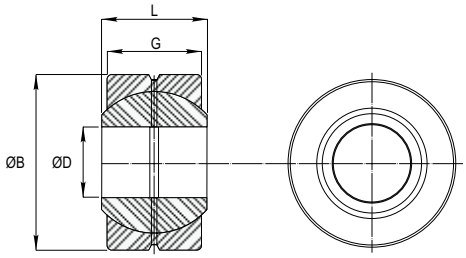

Superficie de contacto: acero/acero - *Contact surface: steel/steel.*
Equivalente / *Equivalent INA GE....DO*
Equivalente / *Equivalent SKF GE....ES*

Weldable Ball Joint Din648

Order Code	ØD	ØB	ØG	L	T	M	R	Peso *Weight* Kgs.	Price
TAC0215	15	40	21	51	31	10	12	0.12	£12.17
TAC0220	20	53	28	65	38	13	16	0.23	£12.13
TAC0225	25	64	34	77	45	17	20	0.43	£17.19
TAC0230	30	73	40	88	51	19	22	0.64	£22.93
TAC0235	35	82	47	102	61	21	25	0.96	£27.53
TAC0240	40	92	52	115	69	23	28	1.30	£37.11
TAC0245	45	102	58	128	77	27	32	1.80	£46.40
TAC0250	50	112	62	144	88	30	35	2.50	£59.30

* Unidades en milímetros.
Units in milimeters.

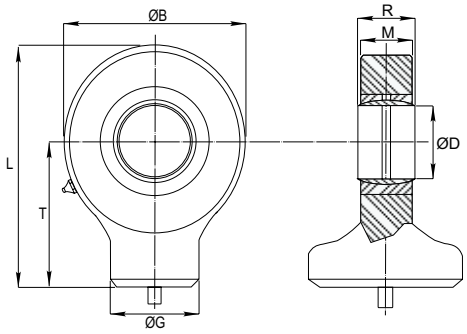

Superficie de contacto: acero/acero - *Contact surface: steel/steel.*
Equivalente / *Equivalent INA GK....DO*
Equivalente / *Equivalent SKF SC....ES*

Spheric Ball Joint TPN Din648

Order Code	ØD	B	G	L	T	Peso *Weight* Kgs.	Price
TPN320	20	50	20	63	38	0.35	£11.00
TPN325	25	55	24	73	45	0.55	£15.33
TPN330	30	65	29	83	51	0.90	£20.66
TPN335	35	83	31	102	61	1.50	£25.39
TPN340	40	100	36	119	69	2.40	£47.95
TPN345	45	110	41	132	77	3.40	£64.38
TPN350	50	123	41	150	88	4.40	£77.46

* Unidades en milímetros.
Units in milimeters.

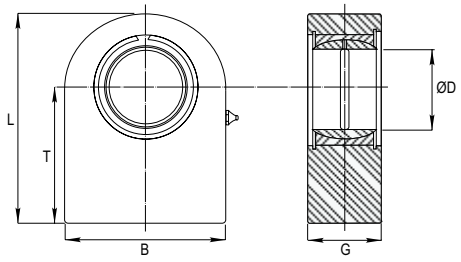

Superficie de contacto: acero/acero - *Contact surface: steel/steel.*
Equivalente / *Equivalent INA GF....DO*
Equivalente / *Equivalent SKF SCF....DO*

Swinging End

Order Code	ØD	ØB	T	L	ØR	Peso *Weight* Kgs.	Price
BSK085	50	40	20	82	85	2.20	£159.36
BSK098	60	50	25	100	98	3.40	£233.72
BSK105	70	60	30	115	105	4.82	£277.93

* Unidades en milímetros.
Units in milimeters.

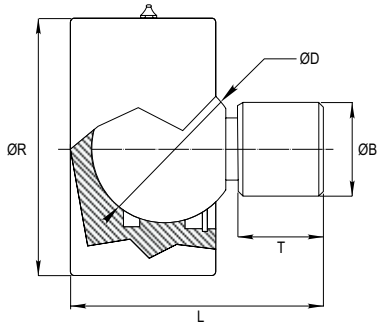

Base oscilante soldable / *Weldable swinging end.*
Roscada bajo pedido / *On request threaded.*

Machining Fork (threaded)

Order Code	ØD	G	B	L	T	M	R	S	Peso *Weight* Kgs.	Price
FR0216	16.20	M16x1.5	16	55	39	24	16	35	0.12	£POA
FR0220	20.25	M20x1.5	20	65	45	30	20	40	0.23	£POA
FR0225	25.25	M24x2.0	25	70	50	30	20	50	0.43	£POA
FR0230	30.25	M30x2.0	30	90	65	35	25	60	0.64	£POA
FR0235	35.25	M33x2.0	35	105	75	40	30	70	0.96	£POA

* Unidades en milímetros.
Units in milimeters.

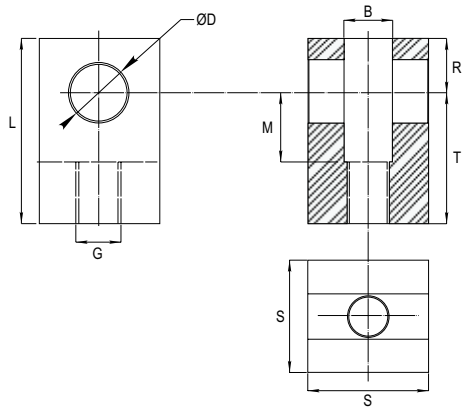

Material en St52.3 / *Material in St52.3.*
Roscada / *Threaded.*

Machining Fork (weldable)

Order Code	ØD	B	L	T	M	R	S	Peso *Weight* Kgs.	Price
FS0216	16.20	16	55	39	24	16	35	0.12	£POA
FS0220	20.25	20	65	45	30	20	40	0.23	£POA
FS0225	25.25	25	70	50	30	20	50	0.43	£POA
FS0230	30.25	30	90	65	35	25	60	0.64	£POA
FS0235	35.25	35	105	75	40	30	70	0.96	£POA

* Unidades en milímetros.
Units in milimeters.

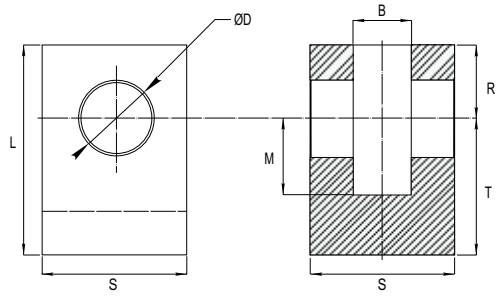

Material en St52.3 / *Material in St52.3.*
Soldable / *Weldable.*

Plain Rod Eye

Order Code	Y	ØA	B	C	D	K	F	G	H	I	J	Peso *Weight* Kgs.	Price
FK032	M12x1.25	12	16	16	31	18	26	34	13	6	47	2.20	£POA
FK040	M16x1.50	16	20	24	41	22	32	49	16	8	65	3.40	£POA
FK050	M20x1.50	20	25	28	48	26	40	56	20	10	76	4.82	£POA
FK060	M27x2.00	25	32	35	57	33	50	67	25	15	92	2.20	£POA
FK070	M27x2.00	25	32	35	57	33	50	67	25	15	92	3.40	£POA
FK080	M33x2.00	32	40	44	77	42	65	89	32	17	121	4.82	£POA
FK090	M33x2.00	32	40	44	77	42	65	89	32	17	121	3.40	£POA
FK100	M42x2.00	40	50	54	95	52	80	109	40	20	149	4.82	£POA

* Unidades en milímetros.
Units in milimeters.

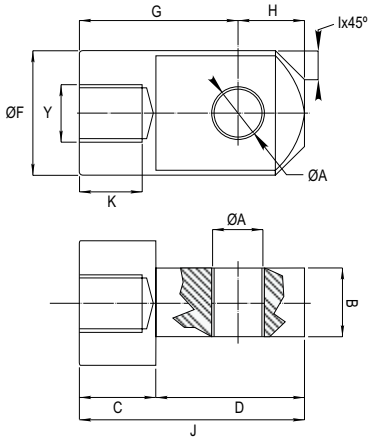

Superficie pavonada / *Blued surface.*
Casquillo interior en bronce / *Inside bush in bronze.*

Weldable Ball Joint

Order Code	ØD	B	ØG	T	R	Peso *Weight* Kgs.	Price
TNC0115	19.30	62	34	60	44	0.62	£POA
TNC0116	20.20	62	34	60	44	0.61	£POA
TNC0120	25.40	75	38	65	51	0.95	£POA
TNC0124	25.40	85	48	75	51	1.65	£POA
TNC0128	30.20	85	48	75	51	1.55	£POA
TNC0132	35.20	85	50	65	55	1.30	£POA
TNC0134	40.20	108	60	85	75	3.45	£POA
TNC0138	45.20	108	60	85	75	3.25	£POA
TNC0142	50.20	108	60	85	75	3.05	£POA

* Unidades en milímetros.
Units in milimeters.

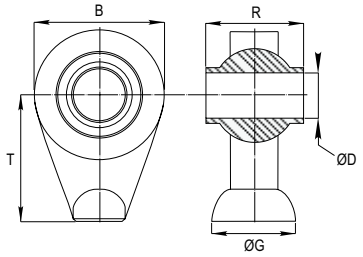

Superficie de contacto: acero-acero / *Contact surface : steel-steel.*
Tratamiento zinc trivalente / *Zinc trivalent treatment.*

Rapid Hook (female)

Order Code	Cat.	ØD	ØB	T	L	Peso *Weight* Kgs.	Price
EPS2050	2	50	M30X2.0	35	102	2.30	£109.89
EPS3060	3	60	M36X2.0	40	132	4.04	£129.81

* Unidades en milímetros.
Units in milimeters.

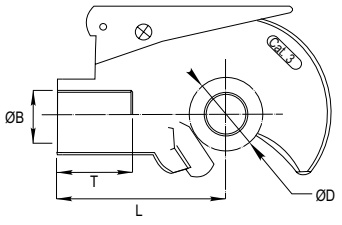

Superficie de contacto: acero-acero / *Contact surface : steel-steel.*
Tratamiento zinc trivalente / *Zinc trivalent treatment.*
El enganche rápido se suministra sin bola / *Rapid hook is supplied whithout ball.*

Rapid Hook (male)

Order Code	Cat.	ØD	ØB	T	L	Peso *Weight* Kgs.	Price
EPM2050	2	50	M30X3.0	180	102	3.40	£109.89
EPM3060	3	60	M36X3.0	180	132	5.78	£129.81

* Unidades en milímetros.
Units in milimeters.

Cadena enganche rápido
Rapid hook chain

Order Code	Longitud *Lenght*	Peso *Weight* Kgs.	Price
CH0150	1.500	0.00	£9.46
CH0200	2.000	0.00	£12.61

* Unidades en milímetros.
Units in milimeters.

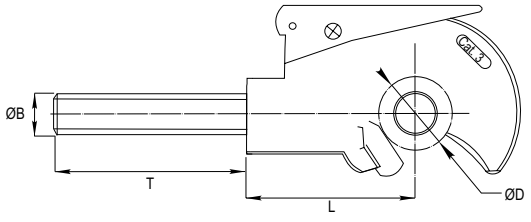

Superficie de contacto: acero-acero / *Contact surface : steel-steel.*
Tratamiento zinc trivalente / *Zinc trivalent treatment.*
El enganche rápido se suministra sin bola / *Rapid hook is supplied whithout ball.*

Rapid Hook Ball

Order Code	ØB	ØD	L	Peso *Weight* Kgs.	Price
GA216X	50	19	44	0.34	£6.72
GA220X	50	19	51	0.42	£6.93
GA225X	50	22	51	0.47	£7.69
GA230X	50	25	44	0.34	£6.18
GA235X	50	25	51	0.35	£6.35
GA240X	50	30	51	0.44	£6.18
GA245X	60	25	51	0.64	£10.24
GA250X	60	28	51	0.59	£9.93
GA255X	60	32	51	0.56	£9.41

* Unidades en milímetros.
Units in milimeters.

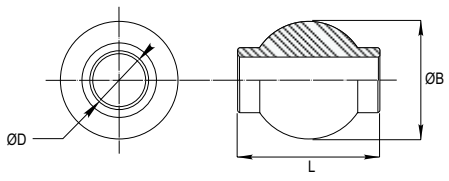

Bola para enganche rápido EPS y EPM (página 24).
Ball for rapid hook EPS and EPM (page 24).
Tratamiento zinc trivalente.
Zinc trivalent treatment.

Threaded Ball Join

Order Code	Cat.	ØD	M	ØP	S	L	T	K	Peso *Weight* Kgs.	Price
RPS3355	1	19	M30X2.0	62	175	225	55	44	1.36	£POA
RPS4400	2	25	M30X2.0	75	165	220	55	51	1.62	£POA

* Unidades en milímetros.
Units in milimeters.

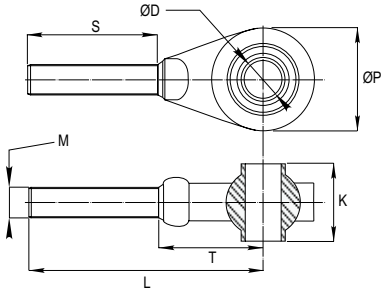

Rótula roscada para cilindro tercer punto Serie 600 (página 14).
Ball for hydraulic top link 600 series (page 14).
Tratamiento zinc trivalente.
Zinc trivalent treatment.

Standard Fork (folded)

Order Code	ØD	B	G	L	T	M	K	N	Peso *Weight* Kgs.	Price
KX0216	16	32	16	47	33	14	35	8	0.43	£17.80
KX0220	20	36	20	51	35	16	40	8	0.48	£20.15
KX0225	25	45	25	62	40	22	45	10	0.74	£24.79
KX0230	30	60	30	75	50	25	60	15	1.20	£29.05
KX0235	35	65	35	85	55	30	70	15	2.00	£32.87
KX0240	40	80	40	95	60	35	80	20	3.80	£47.81

* Unidades en milímetros.
Units in milimeters.

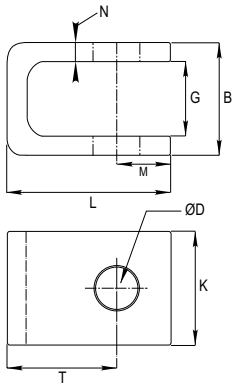

Material en St52.3 / *Material in St52.3.*
Otras medidas bajo pedido / *Other measures on request.*

Standard End-plug

Order Code	ØB	ØG	T	M	N	Peso *Weight* Kgs.	Price
FE0116	40	32	10	13	3	0.40	£2.26
FE0220	50	40	15	18	3	0.75	£2.78
FE0320	55	45	15	18	3	1.05	£4.58
FE0425	60	50	15	18	3	1.20	£6.11
FE0525	65	55	15	18	3	1.40	£14.03
FE0625	70	60	15	18	3	1.65	£6.67
FE0725	75	65	15	18	3	2.05	£7.57
FE0830	80	70	15	18	3	2.40	£10.12
FE0930	90	80	15	18	3	3.10	£13.55
FE1030	95	80	15	18	3	3.80	£15.14
FE1130	100	90	15	18	3	3.90	£16.43
FE1230	105	90	15	18	3	4.80	£19.81
FE1330	115	100	20	26	6	5.60	£20.91
FE1440	140	120	20	26	6	9.40	£27.08
FE1560	150	130	20	28	8	13.50	£31.37

* Unidades en milímetros.
Units in milimeters.

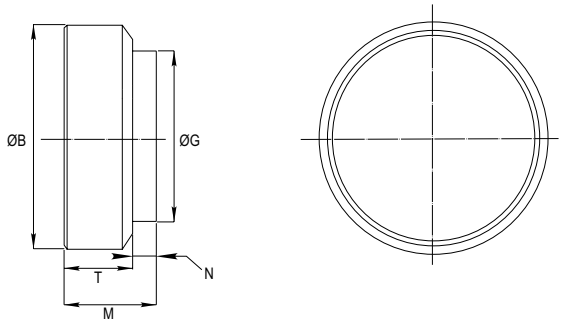

Material en St52.3 / *Material in St52.3.*
Otras medidas bajo pedido / *Other measures on request.*

End-plug XR

Order Code	ØB	ØG	ØD	L	R	S	F	M	N	Z	Peso *Weight* Kgs.	Price
XR0800	80	70	28.20	52	15	60	25	76	3.0	40	3.15	£POA
XR0950	95	80	28.20	52	15	60	25	76	3.0	40	4.40	£POA
XR1050	105	90	28.20	52	15	60	25	76	3.0	40	5.40	£POA
XR1150	115	100	28.20	52	15	60	25	79	6.0	40	6.60	£POA

* Unidades en milímetros.
Units in milimeters.

Fondo diseñado para articulación americana ATP (página 28).
End design for ATP articulated yoke (page 28).

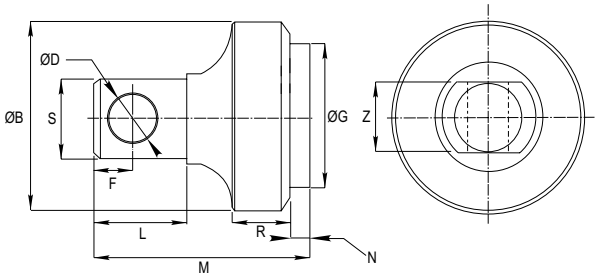

Material en St52.3 / *Material in St52.3.*
Otras medidas bajo pedido / *Other measures on request.*

End-plug XS

Order Code	ØB	ØG	ØS	L	P	M	N	Peso *Weight* Kgs.	Price
XS0600	60	50	30.00	15	5	23	3.0	0.70	£POA
XS0700	70	60	40.00	20	15	38	3.0	1.25	£POA
XS0800	80	70	50.00	20	15	38	3.0	1.65	£POA
XS0900	90	80	50.00	20	15	38	6.0	2.30	£POA
XS0950	95	80	50.00	20	15	38	3.0	2.45	£POA
XS1050	105	90	50.00	22	15	40	3.0	3.25	£POA
XS1150	115	100	50.00	22	15	43	6.0	3.75	£POA

* Unidades en milímetros.
Units in milimeters.

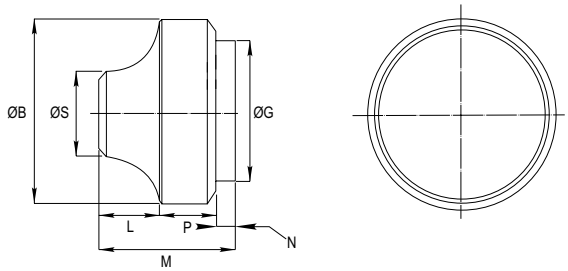

Fondo diseñado para rótulas TNC (página 24).
End design for TNC ball joint (page 24).
Material en St52.3 / *Material in St52.3.*

End-plug XT

Order Code	ØB	ØG	ØK	ØS	L	R	P	M	N	Peso *Weight* Kgs.	Price
XT0800	80	70	M30x3	50	100	15	100	118	3.0	2.15	£POA
XT0950	90	80	M36x3	50	100	15	100	118	3.0	2.80	£POA
XT1050	95	80	M36x3	60	100	15	100	118	3.0	3.15	£POA
XT1150	105	90	M36x3	60	100	15	100	121	6.0	3.65	£POA

* Unidades en milímetros.
Units in milimeters.

Fondo diseñado para rótulas RPS y articulaciones ATP (ajustable).
End design for ball joints RPS and articulated yokes ATP (adjustable).

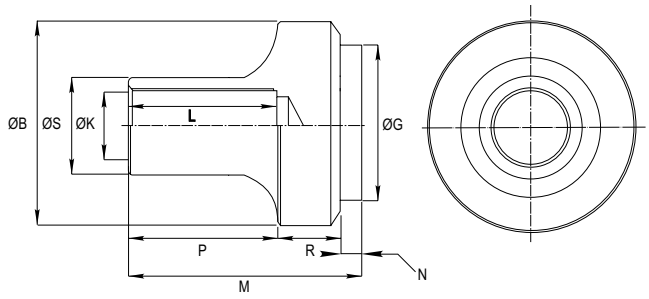

Weld-on Ball End SW

Order Code	ØB	ØG	ØK	ØD	L	R	P	M	N	Peso *Weight* Kgs.	Price
SW0700	70	60	85	25.40	105	10	51	150	2.0	2.00	£POA
SW0800	80	70	85	25.40	105	10	51	150	2.0	2.30	£POA
SW0950	95	80	85	25.40	105	10	51	150	2.0	2.65	£POA
SW0960	95	80	85	32.20	108	10	51	150	2.0	2.55	£POA
SW1050	105	90	85	25.40	108	10	51	150	2.0	3.05	£POA

* Unidades en milímetros.
Units in milimeters.

Material en St52.3 / *Material in St52.3.*
Superficie protegida contra la corrosión / Protected surface against corrosion.

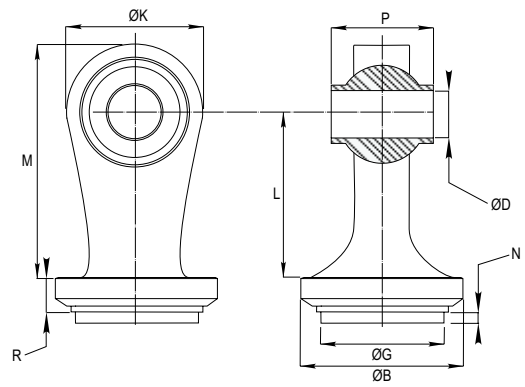

Forged End SZ

Order Code	ØB	ØG	ØK	ØD	L	R	P	M	N	Peso *Weight* Kgs.	Price
SZ0850	80	70	50	28.20	90	18	39	100	4.5	2.50	£35.68
SZ0900	90	80	50	28.20	90	18	39	100	4.5	2.55	£35.68
SZ1050	105	90	50	28.20	88	18	39	102	4.5	2.65	£35.09

* Unidades en milímetros.
Units in milimeters.

Material en St52.3 / *Material in St52.3.*
Superficie protegida contra la corrosión / Protected surface against corrosion.

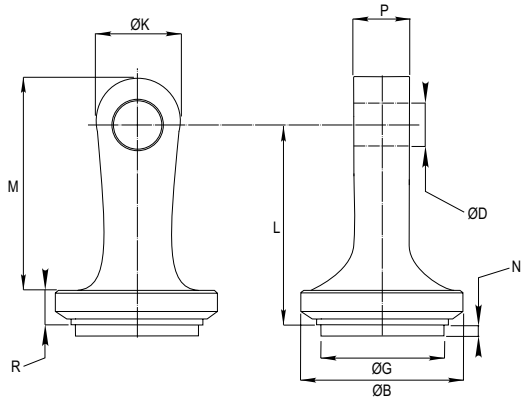

Standard Flange BR

Order Code	ØB	ØM	T	ØL	ØD	Peso *Weight* Kgs.	Price
BRL0400	80	39	10.00	67	7.00	0.15	£21.16
BRL0500	100	49	12.00	82	9.00	0.20	£22.41
BRL0600	125	59	12.00	103	11.00	0.30	£27.22
BRL0700	145	69	12.00	120	13.00	7.00	£40.63
BRL0800	170	79	15.00	142	15.00	7.00	£48.30
BRL0900	170	89	15.00	142	15.00	7.00	£45.32
BRL1000	202	99	15.00	170	17.00	0.15	£75.19
BRP0750	145	74	24.00	120	13.00	0.20	£69.58
BRP0850	170	84	24.00	142	15.00	0.30	£84.32
BRP0950	170	94	24.00	142	15.00	7.00	£83.67
BRP1050	202	104	24.00	170	17.00	7.00	£50.23
BRP1150	202	114	28.00	170	17.00	7.00	£132.52
BRP1400	250	138	30.00	210	21.00	7.00	£137.05
BRP1500	280	148	30.00	230	21.00	7.00	£146.52

* Unidades en milímetros. *Units in milimeters.*

BRL Brida Serie ligera / *Light flange series.*
BRP Brida Serie pesada / *Heavy duty flange series.*

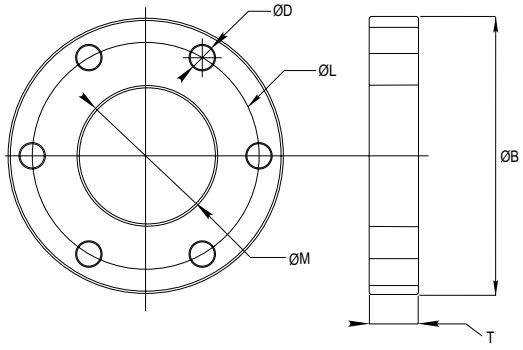

*Material en St52.3 / *Material in St52.3.*

Weld on Trunnion MS

Order Code	ØD	ØB	T	L	M	N	Peso *Weight* Kgs.	Price
MS0500	25	65	15	95	50	29	0.15	£POA
MS0600	30	75	20	115	60	34	0.20	£POA
MS0700	30	90	20	130	70	34	0.30	£POA
MS0800	40	105	30	165	80	54	7.00	£POA
MS0850	40	105	30	165	85	54	7.00	£POA
MS0900	45	120	35	190	90	58	7.00	£POA
MS0950	45	120	35	190	95	58	0.30	£POA
MS1000	45	130	35	200	100	58	7.00	£POA
MS1050	45	130	35	200	105	58	7.00	£POA
MS1150	50	145	40	225	115	68	7.00	£POA

* Unidades en milímetros. *Units in milimeters.*

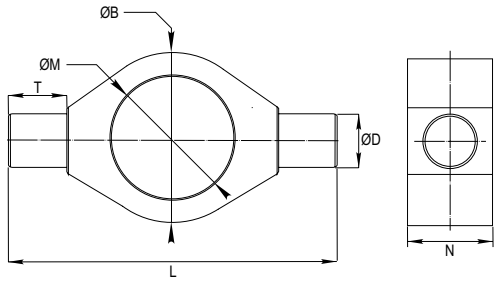

*Material en St52.3 / *Material in St52.3.*

Articulated Yoke ATP

Order Code	ØD	ØB	M	L	P	N	Peso *Weight* Kgs.	Price
ATP0219	19.40	28.20	63	87	40	50	2.15	£34.74
ATP0220	20.40	28.20	63	87	40	50	2.12	£34.74
ATP0222	22.40	28.20	63	87	40	50	2.10	£34.35
ATP0225	25.40	28.20	63	87	40	50	2.05	£34.35
ATP0228	28.40	28.20	63	87	40	50	1.98	£33.61
ATP0230	30.40	28.20	63	87	40	50	1.95	£33.61
ATP0232	32.40	28.20	63	87	40	50	1.90	£33.22

* Unidades en milímetros. *Units in milimeters.*

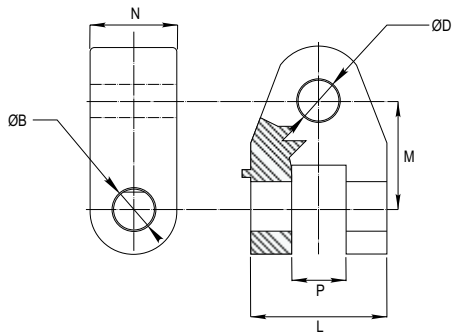

*Tratamiento zinc trivalente / *Zinc trivalent treatment.*

Top Link Locking Collars PS

Order Code	ØD	ØM	T	L	Peso *Weight* Kgs.	Price
PS0205	M30x3	45	60.00	6.0	0.15	£POA
PS0210	M36x3	60	88.00	10.0	0.20	£POA

* Unidades en milímetros.
Units in milimeters.

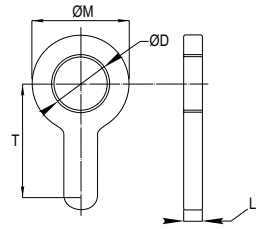

*Tratamiento zinc trivalente / *Zinc trivalent treatment.*

ATP Pin Articulated Yoke

Order Code	ØD	T	L	Peso *Weight* Kgs.	Price
PA0120	28	5.0	90	0.15	£POA

* Unidades en milímetros.
Units in milimeters.

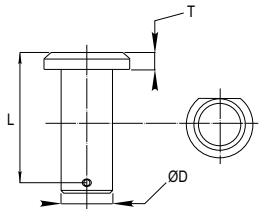

* Incluye pasador.
Elastic pin included.

Threaded Pin Articulated Yoke PR

Order Code	ØD	ØB	T	L	M	N	Peso *Weight* Kgs.	Price
PR0300	28	M30x3	55	220	40	190	0.15	£POA

* Unidades en milímetros.
Units in milimeters.

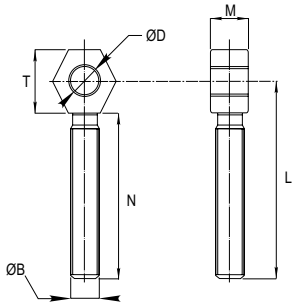

*Tratamiento zinc trivalente / *Zinc trivalent treatment.*

Hexagonal Nut TEX

Order Code	D	L	M	Peso *Weight* Kgs.	Price
TEX0030	M30x3	35	55	0.15	£POA

* Unidades en milímetros.
Units in milimeters.

**Tuerca soldable para tercer punto Serie 600.
Calidad material : St52.3.

***Lock nuts for Series 600 hydraulik top link.*
Material grade: St52.3.

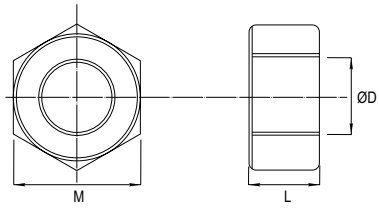

*Material : Acero St52.3 / *Material : St52.3 steel.*

Head Bush CGSE

Order Code	ØA	ØB	ØC	ØM	L	N	Peso *Weight* Kgs.	Price
CGSE032025	25	32	32	37x1.5	33	8	0.45	£POA
CGSE040030	30	40	40	45x2.0	42	7	0.60	£POA
CGSE045035	35	45	45	45x2.0	42	7	0.85	£POA
CGSE050040	40	50	50	55x2.0	44	8	1.35	£POA
CGSE050045	45	50	50	55x2.0	44	8	1.25	£POA
CGSE055050	50	55	55	55x2.0	44	8	1.20	£POA
CGSE060055	55	60	60	65x2.0	47	8	1.95	£POA
CGSE065060	60	65	65	65x2.0	47	8	1.85	£POA
CGSE080070	70	80	80	65x2.0	47	8	1.70	£POA
CGSE100090	90	100	100	65x2.0	47	8	1.55	£POA

* Unidades en milímetros.
Units in milimeters.

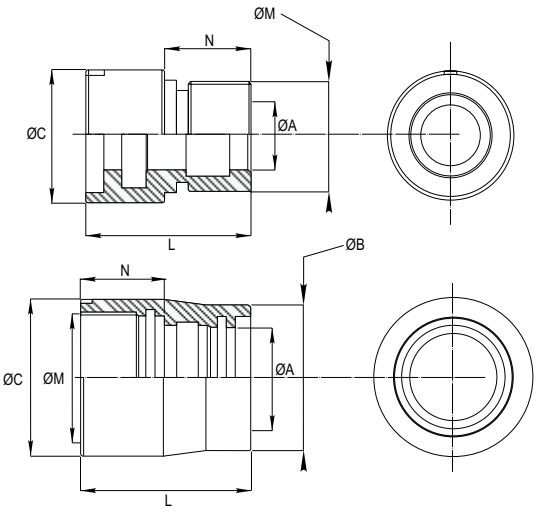

Características:

* Material en DIN C45.
* Cabeza guiada.
* Posibilidad de intercambiar guías:
  Resistencia al esfuerzo radial:
  Resina acetal 30N/mm².
  Resina fenólica 300N/mm².
* Collarín: Labios asimétricos 90 shores.
* Rascador metálico
* Junta tórica 90 shores.

Technical data:

* *Material in DIN C45.*
* *Guided head .*
* *Ability of change guides:*
  Radial stress resistance:
  Acetal resine 30N/mm².
  Phenolic resine 300N/mm².
* *Rod seal : 90 shores asymmetrical lips.*
* *Metal wiper*
* *O-ring : 90 shores.*

Head Bush CGDE

Order Code	ØA	ØB	ØC	ØM	L	N	Peso *Weight* Kgs.	Price
CGDE032020	20	32	40	37x1.5	33	8	0.45	£POA
CGDE040020	20	40	50	45x2.0	42	7	0.60	£17.92
CGDE040025	25	40	50	45x2.0	42	7	0.85	£POA
CGDE050025	25	50	60	55x2.0	44	8	1.35	£22.32
CGDE050030	30	50	60	55x2.0	44	8	1.25	£POA
CGDE050035	35	50	60	55x2.0	44	8	1.20	£POA
CGDE060025	25	60	70	65x2.0	47	8	1.95	£14.54
CGDE060030	30	60	70	65x2.0	47	8	1.85	£14.54
CGDE060035	35	60	70	65x2.0	47	8	1.70	£14.54
CGDE060040	40	60	70	65x2.0	47	8	1.55	£POA
CGDE070035	35	70	80	75x2.0	51	10	2.85	£21.60
CGDE070040	40	70	80	75x2.0	51	10	2.45	£21.55
CGDE070045	45	70	80	75x2.0	51	10	2.25	£POA
CGDE070050	50	70	80	75x2.0	51	10	2.00	£POA
CGDE080035	35	80	90	85x2.0	56	10	0.30	£29.38
CGDE080040	40	80	90	85x2.0	56	10	7.00	£29.38
CGDE080045	45	80	90	85x2.0	56	10	7.00	£29.38
CGDE080050	50	80	90	85x2.0	56	10	7.00	£42.42
CGDE090040	40	90	100	95x2.0	60	10	0.15	£42.52
CGDE090045	45	90	100	95x2.0	60	10	0.20	£42.52
CGDE090050	50	90	100	95x2.0	60	10	0.20	£42.42
CGDE090060	60	90	100	95x2.0	60	10	0.30	£POA
CGDE100050	50	100	115	106x2.0	66	15	7.00	£59.70
CGDE100060	60	100	115	106x2.0	66	15	7.00	£POA

* Unidades en milímetros.
Units in milimeters.

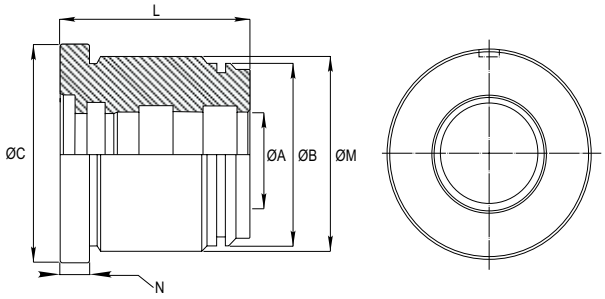

Características:

* Material en DIN C45.
* Cabeza guiada.
* Posibilidad de intercambiar guías :
  Resistencia al esfuerzo radial:
  Resina acetal 30N/mm².
  Resina fenólica 300N/mm².
* Collarín: Doble labio compacto 93 shores.
* Rascador metálico
* Junta tórica 90 shores.

Technical data:

* *Material in DIN C45.*
* *Guided head.*
* *Ability of change guides :*
  Radial stress resistance:
  Acetal resine 30N/mm².
  Phenolic resine 300N/mm².
* *Rod seal: Compact double lip 93 shores.*
* *Metal wiper*
* *O-ring : 90 shores.*

Order Code	ØA	ØB	ØC	ØM	L	N	Peso *Weight* Kgs.	Price
CGDE100070	70	100	115	106x2.0	66	15	7.00	£POA
CGDE120060	60	120	140	126x2.0	68	15	0.60	£POA
CGDE120070	70	120	140	126x2.0	68	15	0.85	£POA
CGDE120080	80	120	140	126x2.0	68	15	1.35	£POA
CGDE130070	70	130	150	136x2.0	75	15	1.25	£POA
CGDE130080	80	130	150	136x2.0	75	15	1.20	£POA
CGDE130090	90	130	150	136x2.0	75	15	1.95	£POA

50% OFF ALL PRICES

Standard Piston OTD

Order Code	ØA	ØB	ØS	ØT	K	Q	L	Peso *Weight* Kgs.	Price
OTD032016	32	16	24	28.00	3.20	15.50	25	0.45	£3.48
OTD040016	40	16	32	36.00	3.20	15.50	35	0.60	£5.72
OTD040022	40	22	32	36.00	3.20	15.50	35	0.85	£17.94
OTD050022	50	22	38	46.00	4.20	20.50	35	1.35	£6.97
OTD050026	50	26	38	46.00	4.20	20.50	35	1.25	£6.97
OTD060022	60	22	48	56.00	4.20	20.50	35	1.20	£8.81
OTD060026	60	26	48	56.00	4.20	20.50	35	1.95	£9.75
OTD070026	70	26	58	66.00	4.20	20.50	36	1.85	£11.78
OTD070032	70	32	58	66.00	4.20	20.50	36	1.70	£11.78
OTD080026	80	26	66	86.00	5.20	22.50	44	1.55	£16.99
OTD080032	80	32	66	86.00	5.20	22.50	44	2.85	£16.99
OTD090032	90	32	76	96.00	5.20	22.50	44	2.45	£22.50
OTD100040	100	40	86	96.00	5.20	22.50	47	1.85	£35.14
OTD120040	120	40	106	116.00	5.20	22.50	47	1.70	£46.81
OTD130060	130	60	105	122.60	9.52	25.40	60	1.55	£POA

* Unidades en milímetros.
Units in milimeters.

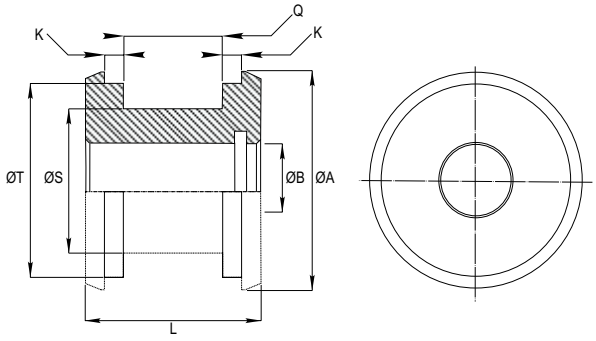

Material en DIN C45 / *Material in DIN C45.*
Montaje pistón modo : DPS (3 piezas) y DAS (5 piezas).
Mounting mode : DPS (3 pieces) and DAS (5 pieces).

Threaded Piston OTR

Order Code	ØA	ØB	ØS	ØT	ØM	K	Q	L	Peso *Weight* Kgs.	Price
OTR032012	32	16	24	28.00	M12x1.5	3.20	15.50	25	0.45	£POA
OTR040016	40	20	32	36.00	M16x1.5	3.20	15.50	35	0.60	£POA
OTR050020	50	25	38	46.00	M20x1.5	4.20	20.50	35	0.85	£POA
OTR060020	60	25	48	56.00	M20x1.5	4.20	20.50	35	1.35	£POA
OTR070030	70	35	58	66.00	M30x2.0	4.20	20.50	36	1.25	£POA
OTR080030	80	35	66	76.00	M30x2.0	5.20	22.50	44	1.20	£POA
OTR090030	90	35	76	86.00	M30x2.0	5.20	22.50	44	1.95	£POA
OTR100030	100	35	86	96.00	M30x2.0	5.20	22.50	47	1.85	£POA
OTR120040	120	45	106	116.00	M40x2.0	5.20	22.50	47	1.70	£POA
OTR130040	130	45	105	122.60	M40x2.0	9.52	25.40	60	1.55	£POA

* Unidades en milímetros.
Units in milimeters.

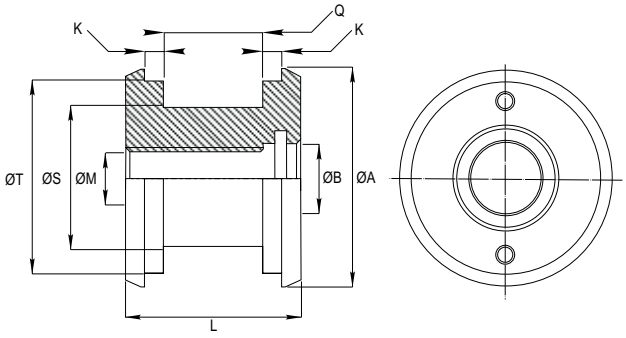

Material en DIN C45 / *Material in DIN C45.*
Montaje pistón modo : DPS (3 piezas) y DAS (5 piezas).
Mounting mode : DPS (3 pieces) and DAS (5 pieces).

Piston OTX

Order Code	ØA	ØB	ØS	ØT	ØM	K	Q	L	Peso *Weight* Kgs.	Price
OTX070030	70	35	54.50	65.00	M30x2.0	9.65	6.30	57	0.45	£POA
OTX080030	80	35	64.50	75.00	M30x2.0	9.65	6.30	57	0.60	£POA
OTX090040	90	45	74.50	85.00	M40x2.0	9.65	6.30	65	0.85	£POA
OTX100040	100	45	79.00	95.00	M40x2.0	9.65	8.10	65	1.35	£POA
OTX120050	120	55	99.00	115.00	M50x2.0	15.00	8.10	85	1.25	£POA
OTX130050	130	55	109.00	125.00	M50x2.0	15.00	8.10	85	1.20	£POA

* Unidades en milímetros.
Units in milimeters.

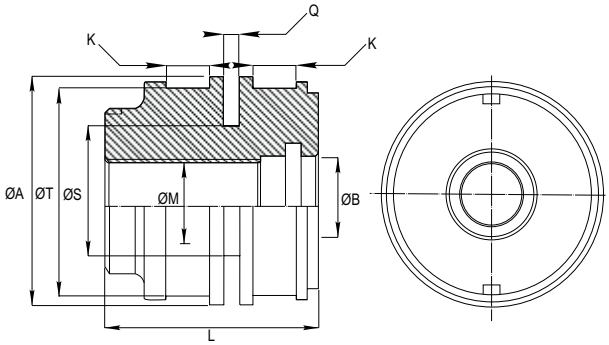

Material en DIN C45 / *Material in DIN C45.*
Montaje pistón modo : Wynseal (Poliuretano). - Glydring Tf+Bz
Mounting mode : Wynseal (Polyurethane). - Glydring Tf+Bz

Nylon Lock Nut Din985

Order Code	ØD	L	Metrica Metric	Peso *Weight* Kgs.	Price
TAB014150	14	14	1.50	0.00	£POA
TAB020150	20	20	1.50	0.00	£POA
TAB024200	24	24	2.00	0.00	£POA
TAB030200	30	30	2.00	0.00	£POA
TAB039300	39	39	3.00	0.00	£POA

* Unidades en milímetros.
Units in milimeters.

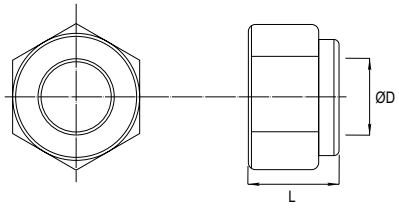

Normativa Din985 / *Norm Din985.*
Tratamiento zinc-plata / *Zinc trivalent treatment.*
Acero 8.8 / *Steel 8.8* .

Threaded Port (female)

Order Code	ØD	ØB	L	Peso *Weight* Kgs.	Price
RSH02016	20	1/8"	16	0.00	£POA
RSH04016	20	1/4"	16	0.00	£POA
RSH04035	20	1/4"	35	0.00	£POA
RSH08016	25	3/8"	16	0.00	£POA
RSH08040	25	3/8"	40	0.00	£POA
RSH10020	30	1/2"	20	0.00	£POA
RSH10045	30	1/2"	45	0.00	£POA
RSH12020	38	3/4"	20	0.00	£POA

* Unidades en milímetros.
Units in milimeters.

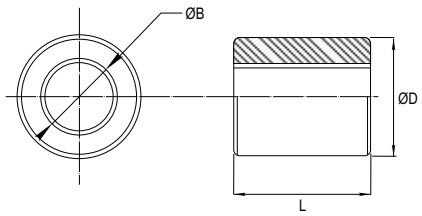

Acero C15 / *Steel C15.*
Buena soldabilidad / *Good weldability.*

Threaded Port (male)

Order Code	ØD	ØB	L	Peso *Weight* Kgs.	Price
RSM02020	1/8"	4.0	20	0.00	£POA
RSM04024	1/4"	6.0	24	0.00	£POA
RSM06024	3/8"	8.0	24	0.00	£POA
RSM08030	1/2"	11.0	30	0.00	£POA
RSM10035	3/4"	14.0	35	0.00	£POA

* Unidades en milímetros.
Units in milimeters.

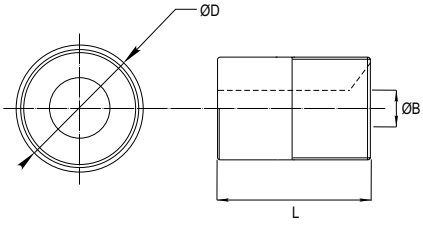

Acero C15 / *Steel C15.*
Buena soldabilidad / *Good weldability.*

50% OFF ALL PRICES

Threaded Port for Pipe

Order Code	ØD	ØB	T	L	Peso *Weight* Kgs.	Price
RTH02050	25	12	1/4	50	0.00	£POA
RTH04050	25	12	3/8	50	0.00	£POA
RTH06055	30	15	1/2	55	0.00	£POA

* Unidades en milímetros.
Units in milimeters.

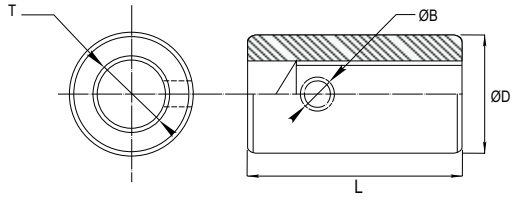

Acero C15 / *Steel C15.*
Buena soldabilidad / *Good weldability.*

Double Threaded Port

Order Code	ØD	ØB	T	L	P	Peso *Weight* Kgs.	Price
RTX02015	1/4"	12	50.00	70	30.00	0.00	£POA
RTX04016	3/8"	14	50.00	80	30.00	0.00	£POA
RTX06016	1/2"	15	60.00	90	40.00	0.00	£POA

* Unidades en milímetros.
Units in milimeters.

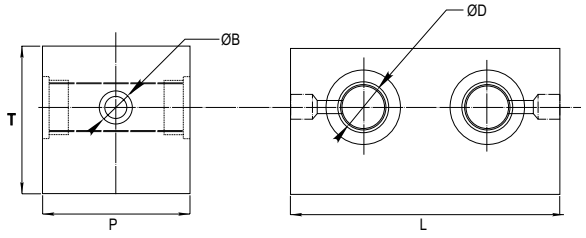

Acero C15 / *Steel C15.*
Buena soldabilidad / *Good weldability.*

Standard Banjo

Order Code	ØD	ØB	T	L	ØR	Peso *Weight* Kgs.	Price
RR02015	1/4"	22	14.50	44	12.00	0.07	£POA
RR04016	3/8"	22	17.00	39	12.00	0.07	£POA
RR06016	1/2"	27	22.00	45	15.00	0.14	£POA

* Unidades en milímetros.
Units in milimeters.
Se suministra con tuerca y bicono / *Supplied whit nut and bicone.*
Acero C15 / Steel C15.

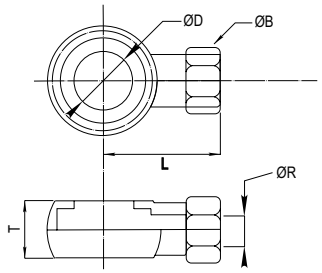

Short Pressing Banjo

Order Code	ØD	ØB	T	L	ØR	Peso *Weight* Kgs.	Price
RC02015	1/4"	22	14.50	44	12.00	0.04	£POA
RC04016	3/8"	22	17.00	39	12.00	0.05	£POA
RC06016	1/2"	27	22.00	45	15.00	0.09	£POA

* Unidades en milímetros.
Units in milimeters.

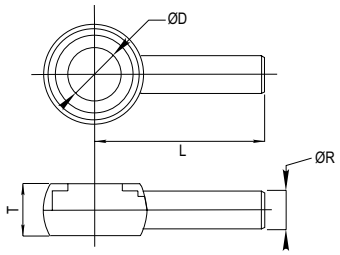

Medium Pressing Banjo

Order Code	ØD	ØB	T	L	ØR	Peso *Weight* Kgs.	Price
RM02015	1/4"	22	14.50	112	12.00	0.08	£POA
RM04016	3/8"	22	17.00	106	12.00	0.08	£POA
RM06016	1/2"	27	22.00	109	15.00	0.13	£POA

* Unidades en milímetros.
Units in milimeters.

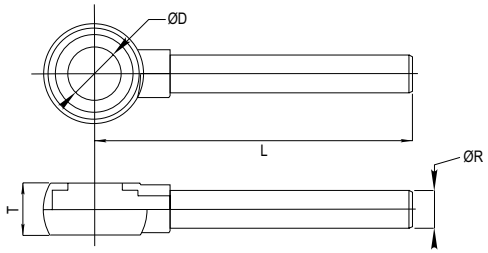

Long Pressing Banjo

Order Code	ØD	ØB	T	L	ØR	Peso *Weight* Kgs.	Price
RL02015	1/4"	22	14.50	205	12.00	0.11	£POA
RL04016	3/8"	22	17.00	199	12.00	0.11	£POA
RL06016	1/2"	27	22.00	202	15.00	0.18	£POA

* Unidades en milímetros.
Units in milimeters.

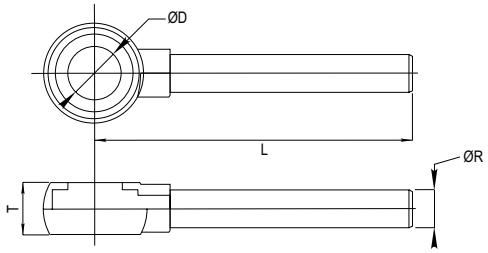

Extra-long Pressing Banjo

Order Code	ØD	ØB	T	L	ØR	Peso *Weight* Kgs.	Price
RE02015	1/4"	22	14.50	305	12.00	0.15	£POA
RE02020	1/4"	22	14.50	405	12.00	0.19	£POA
RE04016	1/4"	22	14.50	505	12.00	0.23	£POA
RE04020	3/8"	22	17.00	300	12.00	0.15	£POA
RE06016	3/8"	27	17.00	400	12.00	0.18	£POA
RE06020	3/8"	27	17.00	500	12.00	0.22	£POA

* Unidades en milímetros.
Units in milimeters.

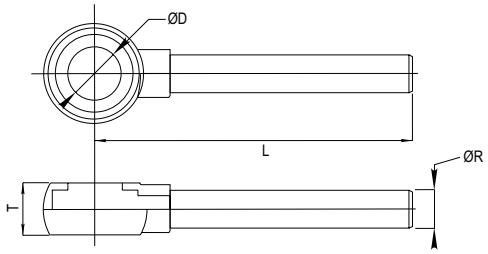

50% OFF ALL PRICES

Simple Screw

Order Code	ØD	Peso *Weight* Kgs.	Price
RK02015	1/4"	0.04	£POA
RK04016	3/8"	0.05	£POA
RK06016	1/2"	0.09	£POA

* Unidades en milímetros.
Units in milimeters.

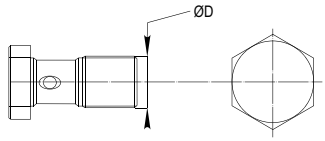

Acero C15 / *Steel C15.*
Tornillo simple / *Single screw.*

Metalbuna Washer

Order Code	ØD	Peso *Weight* Kgs.	Price
RW02015	1/4"	0.08	£POA
RW04016	3/8"	0.08	£POA
RW06016	1/2"	0.13	£POA

* Unidades en milímetros.
Units in milimeters.

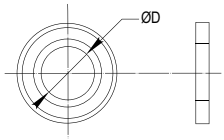

Arandela metalbuna / *Metalbuna washer.*
Otras medidas bajo pedido / *Other measures on request.*

Silencer Plug

Order Code	ØD	Peso *Weight* Kgs.	Price
RD02015	1/4"	0.11	£POA
RD04016	3/8"	0.11	£POA
RD06016	1/2"	0.18	£POA

* Unidades en milímetros.
Units in milimeters.

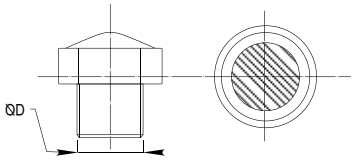

Silenciador de bronce / *Bronze silencer plug.*
Otras medidas bajo pedido / *Other measures on request.*

DL Nut Type

Order Code	ØD	ØB	Peso *Weight* Kgs.	Price
RZ02015	1/4"	10	0.15	£POA
RZ02020	3/8"	12	0.19	£POA
RZ04016	1/2"	22	0.23	£POA

* Unidades en milímetros.
Units in milimeters.

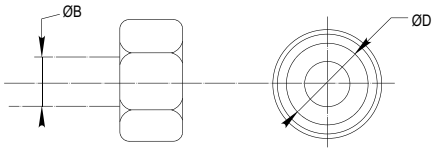

Tuerca tipo DL / *DL nut type.*
Otras medidas bajo pedido / *Other measures on request.*

Chrome Bar Ck45

Order Code	Ø	Peso *Weight* Kg/m	Price
01-000016	16	1.58	£POA
01-000020	20	2.47	£POA
01-000025	25	3.85	£POA
01-000030	30	5.55	£POA
01-000035	35	7.55	£POA
01-000040	40	9.86	£POA
01-000045	45	12.50	£POA
01-000050	50	15.40	£POA
01-000055	55	17.27	£POA
01-000060	60	22.20	£POA
01-000065	65	26.00	£POA
01-000070	70	30.20	£POA
01-000075	75	34.70	£POA

Order Code	Ø	Peso *Weight* Kg/m	Price
01-000080	80	39.50	£POA
01-000085	85	52.40	£POA
01-000090	90	49.91	£POA
01-000095	95	55.61	£POA
01-000100	100	61.62	£POA
01-000110	110	74.60	£POA
01-000115	115	81.54	£POA
01-000120	120	88.60	£POA
01-000125	125	96.30	£POA
01-000127	127	96.75	£POA
01-000130	130	104.00	£POA
01-000140	140	121.00	£POA
01-000150	150	139.00	£POA

* Unidades en milímetros. *Units in milimeters.*

Características técnicas:

*Tolerancia sobre diámetro ISO f7 / h7.
*Espesor de cromo 20 - 25 µ.
*Resistencia a la corrosión:
- 120 h según norma ASTM B117.
*Rugosidad (Ra) 0,2 µ.
*Grado de material Ck45.

Características mecánicas:

*Carga de rotura: 600-700 N/mm².
*Límite elástico: >340 N/mm².
*Alargamiento: 17%.
*Dureza Min. 207 HB .

Technical data :

**Tolerance on diameter ISO f7 / h7.*
**Chrome thickness 20 - 25 µ.*
**Corrosion resistance:*
120 h according to norm ASTM B117.
**Rugosity (Ra) 0,2 µ.*
**Material Ck45.*

Mechanical characteristics :

**Breaking load: 600-700 N/mm².*
**Elastic limit: >340 N/mm².*
**Elongation: 17%.*
**Hardness Min. 207 HB .*

Chrome Bar 42CrMo4

Order Code	Ø	Peso *Weight* Kg/m	Price
02-000016	16	1.58	£POA
02-000020	20	2.47	£POA
02-000025	25	3.85	£POA
02-000030	30	5.55	£POA
02-000035	35	7.55	£POA
02-000040	40	9.86	£POA
02-000045	45	12.50	£POA
02-000050	50	15.40	£POA
02-000055	55	17.27	£POA
02-000060	60	22.20	£POA
02-000065	65	26.00	£POA
02-000070	70	30.20	£POA
02-000075	75	34.70	£POA

Order Code	Ø	Peso *Weight* Kg/m	Price
02-000080	80	39.50	£POA
02-000085	85	52.40	£POA
02-000090	90	49.91	£POA
02-000095	95	55.61	£POA
02-000100	100	61.62	£POA
02-000110	110	74.60	£POA
02-000115	115	81.54	£POA
02-000120	120	88.60	£POA
02-000125	125	96.30	£POA
02-000127	127	96.75	£POA
02-000130	130	104.00	£POA
02-000140	140	121.00	£POA
02-000150	150	139.00	£POA

* Unidades en milímetros. *Units in milimeters.*

Características técnicas:

*Tolerancia sobre diámetro ISO f7 / h7.
*Espesor de cromo 20 - 25 µ.
*Resistencia a la corrosión:
- 120 h según norma ASTM B117.
*Rugosidad (Ra) 0,2 µ.
*Grado de material 42CrMo4.

Características mecánicas:

*Carga de rotura: 900-1200 N/mm².
*Límite elástico: >650 N/mm².
*Alargamiento: 12%.
*Dureza Min. 241 HB.

Technical data :

**Tolerance on diameter ISO f7 / h7.*
**Chrome thickness 20 - 25 µ.*
**Corrosion resistance:*
120 h according to norm ASTM B117.
**Rugosity (Ra) 0,2 µ.*
**Material : 42CrMo4.*

Mechanical characteristics :

**Breaking load : 900-1200 N/mm².*
**Elastic limit: >650 N/mm².*
**Elongation: 12%.*
**Hardness Min. 241 HB .*

Feed Pipe

Order Code	Ø Exterior *Outside*	Espesor *Thickness* mm.	Peso *Weight* Kg/m	Price
10-100015	10	1.5	0.32	£POA
10-100020	10	2.0	0.40	£POA
10-100025	10	2.5	0.47	£POA
10-120020	12	2.0	0.50	£POA
10-120025	12	2.5	0.59	£POA
10-120030	12	3.0	0.67	£POA
10-140020	14	2.0	0.60	£POA
10-140025	14	2.5	0.71	£POA
10-140030	14	3.0	0.82	£POA

Order Code	Ø Exterior *Outside*	Espesor *Thickness* mm.	Peso *Weight* Kg/m	Price
10-150020	15	2.0	0.65	£POA
10-150025	15	2.5	0.78	£POA
10-150030	15	3.0	0.89	£POA
10-160020	16	2.0	0.70	£POA
10-160025	16	2.5	0.84	£POA
10-160030	16	3.0	0.97	£POA
10-180020	18	2.0	0.79	£POA
10-180025	18	2.5	0.96	£POA
10-180030	18	3.0	1.11	£POA

* Unidades en milímetros. *Units in milimeters.*

Características técnicas:

*Calidad de acero St52.
*Acabado BK.
*Según Norma : DIN2393.

Características mecánicas:

*Carga de rotura : 600-700 N/mm².
*Límite elástico: >650 N/mm².
*Alargamiento: 4%.

Technical data:

**Steel St52.*
**Finished BK.*
**According to norm : DIN2391.*

Mechanical characteristics:

**Breaking load: 600-700 N/mm².*
**Elastic load : >650 N/mm².*
**Elongation: 4%.*

50% OFF ALL PRICES

Seamless Cold-Drawn Tube H8

Order Code	Ø Int.	Ø Ext.	Espesor mm.	Peso *Weight* Kg/m	Price
11-040050	40	50	5.0	5.55	£POA
11-050060	50	60	5.0	6.78	£POA
11-050065	50	65	7.5	10.65	£POA
11-060070	60	70	5.0	8.05	£POA
11-060075	60	75	7.5	12.48	£POA
11-070080	70	80	5.0	9.25	£POA
11-070085	70	85	7.5	14.35	£POA
11-080090	80	90	5.0	10.50	£POA
11-080095	80	95	7.5	16.18	£POA
11-090100	90	100	5.0	11.71	£POA
11-090105	90	105	7.5	18.05	£POA
11-090110	90	110	10.0	24.70	£POA
11-100115	100	115	7.5	19.88	£POA

Order Code	Ø Int.	Ø Ext.	Espesor mm.	Peso *Weight* Kg/m	Price
11-120140	120	140	10.0	32.10	£POA
11-130150	130	150	10.0	34.55	£POA
11-130160	130	160	15.0	53.65	£POA
11-140160	140	160	10.0	37.00	£POA
11-140170	140	170	15.0	57.35	£POA
11-150170	150	170	10.0	39.50	£POA
11-150180	150	180	15.0	61.05	£POA
11-160180	160	180	10.0	41.95	£POA
11-160190	160	190	15.0	64.75	£POA
11-180200	180	200	10.0	46.90	£POA
11-180210	180	210	15.0	74.15	£POA
11-200220	200	230	15.0	79.55	£POA
11-250300	250	300	25.0	169.55	£POA

Características técnicas:

*Material St52. Tol. h8.
*Acabado BK+S.
*Según Norma :
DIN2391 / EN10305-1.

Características mecánicas:

*Carga de rotura : >570 N/mm².
*Límite elástico: >470 N/mm².
*Alargamiento: 14%.
*Rugosidad (Ra) 0.2 µ.

Technical data:

**Steel St52. Tol. h8.*
**Finished BK+S.*
**According to norm :*
DIN2391 / EN10305-1.

Mechanical characteristics:

**Breaking load: >570 N/mm².*
**Elastic load : >470 N/mm².*
**Elongation: 14%.*
**Rugosity (Ra) 0.2 µ.*

* Unidades en milimetros.
Units in milimeters.

Welded Cold-Drawn Tube H9

Order Code	Ø Int.	Ø Ext.	Espesor mm.	Peso *Weight* Kg/m	Price
12-032040	32	40	4.0	3.55	£POA
12-035045	35	45	5.0	4.95	£POA
12-040050	40	50	5.0	5.55	£POA
12-045055	45	55	5.0	6.17	£POA
12-050060	50	60	5.0	6.78	£POA
12-055065	55	65	5.0	7.40	£POA
12-060070	60	70	5.0	8.01	£POA
12-060075	60	75	7.5	12.50	£POA
12-065075	65	75	5.0	8.63	£POA
12-070080	70	80	5.0	9.25	£POA
12-070085	70	85	7.5	14.30	£POA
12-080090	80	90	5.0	10.50	£POA
12-080095	80	95	7.5	16.20	£POA

Order Code	Ø Int.	Ø Ext.	Espesor mm.	Peso *Weight* Kg/m	Price
12-032040	32	40	4.0	3.55	£POA
12-035045	35	45	5.0	4.95	£POA
12-040050	40	50	5.0	5.55	£POA
12-045055	45	55	5.0	6.17	£POA
12-050060	50	60	5.0	6.78	£POA
12-055065	55	65	5.0	7.40	£POA
12-060070	60	70	5.0	8.01	£POA
12-060075	60	75	7.5	12.50	£POA
12-065075	65	75	5.0	8.63	£POA
12-070080	70	80	5.0	9.25	£POA
12-070085	70	85	7.5	14.30	£POA
12-080090	80	90	5.0	10.50	£POA
12-080095	80	95	7.5	16.20	£POA

Características técnicas:

*Material St52. Tol. h9.
*Acabado BK.
*Según Norma :
DIN2393.

Características mecánicas:

*Carga de rotura : >630 N/mm².
*Límite elástico: >540 N/mm².
*Alargamiento: 7%.
*Rugosidad (Ra) 0.4 -0.6 µ.

Technical data:

**Steel St52. Tol. h9.*
**Finished BK.*
**According to norm :*
DIN2393.

Mechanical characteristics:

**Breaking load: >630 N/mm².*
**Elastic load : >540 N/mm².*
**Elongation: 7%.*
**Rugosity (Ra) 0.4 - 0.6 µ.*

* Unidades en milimetros.
Units in milimeters.

Chromed Cold-Drawn Tube H9

Order Code	Ø Int.	Ø Ext.	Espesor mm.	Peso *Weight* Kg/m	
13-032040	32	40	4.0	3.55	£POA
13-035045	35	45	5.0	4.95	£POA
13-040050	40	50	5.0	5.55	£POA
13-045055	45	55	5.0	6.17	£POA
13-050060	50	60	5.0	6.78	£POA
13-055065	55	65	5.0	7.40	£POA
13-060070	60	70	5.0	8.01	£POA
13-060075	60	75	7.5	12.50	£POA
13-065075	65	75	5.0	8.63	£POA

Order Code	Ø Int.	Ø Ext.	Espesor mm.	Peso *Weight* Kg/m	Price
13-032040	32	40	4.0	3.55	£POA
13-035045	35	45	5.0	4.95	£POA
13-040050	40	50	5.0	5.55	£POA
13-045055	45	55	5.0	6.17	£POA
13-050060	50	60	5.0	6.78	£POA
13-055065	55	65	5.0	7.40	£POA
13-060070	60	70	5.0	8.01	£POA
13-060075	60	75	7.5	12.50	£POA
13-065075	65	75	5.0	8.63	£POA

Características técnicas:

*Material St52. Tol. h9.
*Acabado BK.
*Según Norma :
DIN2393.

Características mecánicas:

*Carga de rotura : >630 N/mm².
*Límite elástico: >540 N/mm².
*Alargamiento: 7%.
*Cromado 25 - 30 micras.

Technical data:

**Steel St52. Tol. h9.*
**Finished BK.*
**According to norm :*
DIN2393.

Mechanical characteristics:

**Breaking load: >630 N/mm².*
**Elastic load : >540 N/mm².*
**Elongation: 7%.*
**Chromed 25 - 30 microns.*

* Unidades en milimetros.
Units in milimeters.

Operated Check Valve

Order Code	D	B	T	L	Peso *Weight* Kg	Price
VADP004EX	1/4"	64	36.00	134	0.65	£POA
VADP008EX	3/8"	64	36.00	134	0.63	£38.16

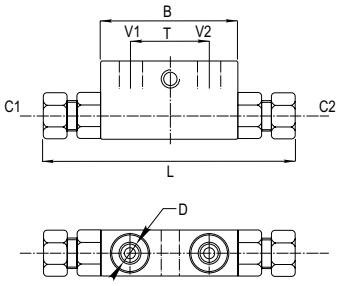

Esquema hidráulico
Hydraulic diagram

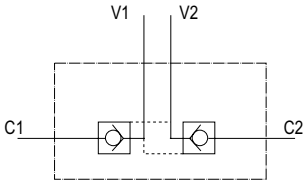

Presión máxima / *Max. pressure* : 350 bar.
Aplicación :
Las válvulas VADP son usadas para blocar cilindros de doble efecto.
Aplication :
VADP valves are used to lock double acting hydraulic cylinders.

Cuerpo : Acero bicromatado
Body : Zinc plated steel.
Apertura muelle : 4.0 bar.
Open spring: 4.0 bar.

VP Valve Adapter

Order Code	ØD	L	Peso *Weight* Kg	Price
RVP004	1/4"	50	0.15	£POA
RVP006	3/8"	59	0.20	£POA
RVP008	1/2"	65	0.30	£POA

Order Code	ØD	L	Peso *Weight* Kg	Price
RVS004	1/4"	50	0.15	£POA
RVS006	3/8"	59	0.20	£POA
RVS008	1/2"	65	0.30	£POA

Cuerpo : Acero bicromatado
Body : Zinc plated steel.

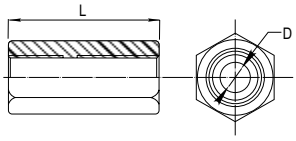

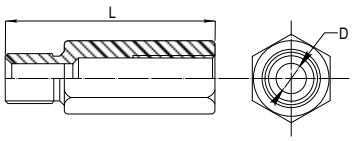

Burst Valve

Order Code	ØD	L	Peso *Weight* Kg	Price
VP004	1/4	23	0.15	£POA
VP006	3/8	23	0.20	£POA
VP008	1/2	34	0.30	£POA

Esquema hidráulico
Hydraulic diagram

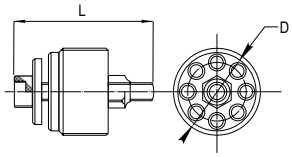

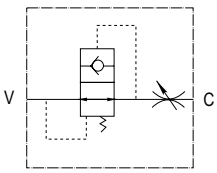

Cuerpo : Acero pavonado.
Body : Blued steel.

Plough Overturning Valve

Order Code	D	P	T	L	C1 / C2 Ø	Peso *Weight* Kg	Price
VSEB03800	30	3/8"	3/8"	142	12.00	1.99	£278.88
VSEB03802	30	3/8"	3/8"	142	12.00	1.99	£316.15

Presión máxima / *Max. pressure* : 400 bar.
Aplicación :
Las válvulas VSEB son usadas para voltear cilindros de simple y doble efecto.
Aplication :
VSEB valves are used to turning plough in double and single acting cylinders.
Inversión a / *Inversion to* : 140 bar.

Esquema hidráulico
Hydraulic diagram

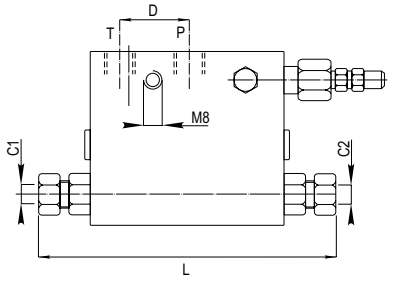

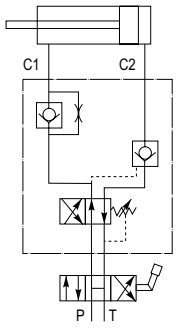

Cuerpo : Acero bicromatado
Body : Zinc plated steel.

90° Flow Regulator Valve

Order Code	ØD	S	M	L	Caudal máx. *Max. flow Lt./min.*	Presión máx. *Max. pressure Bar*	Peso *Weight* Kg	Price
VRU04002	1/4"	25	M22x1.5	82	15.0	350	0.37	£77.22
VRU04004	3/8"	25	M22x1.5	82	30.0	350	0.36	£78.71
VRU04006	1/2"	30	M22x1.5	87	50.0	350	0.47	£95.21
VRU04008	3/4"	40	M35x1.5	108	80.0	280	1.10	£169.31
VRU04010	1"	40	M35x1.5	129	80.0	250	1.00	£POA

* Regulación: Unidireccional.
Regulation: One way.

Esquema hidráulico
Hydraulic diagram

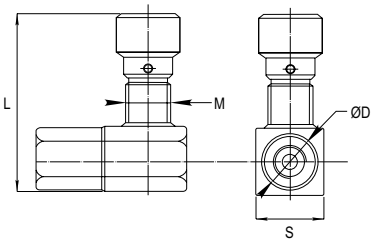

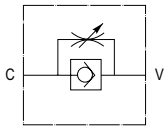

Cuerpo : Acero bicromatado
Body : Zinc plated steel.

90° Flow Regulator Valve

Order Code	ØD	S	M	L	Caudal máx. *Max. flow Lt./min.*	Presión máx. *Max. pressure Bar*	Peso *Weight* Kg	Price
VRB04002	1/4"	25	M22x1.5	82	15.0	350	0.42	£69.51
VRB04004	3/8"	25	M22x1.5	82	30.0	350	0.42	£70.98
VRB04006	1/2"	30	M22x1.5	87	50.0	350	0.59	£83.92
VRB04008	3/4"	40	M35x1.5	108	80.0	280	1.36	£158.42
VRB04010	1"	40	M35x1.5	129	80.0	250	1.39	£POA

* Regulación: Bidireccional.
Regulation: Two ways.

Esquema hidráulico
Hydraulic diagram

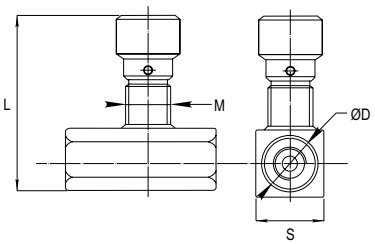

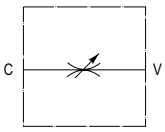

Cuerpo : Acero bicromatado
Body : Zinc plated steel.

*Apertura: 0.5 bar.
Cracking pressure: 0.5 bar.

100 Series Seals Kit

Order Code	Ø Vástago *Ø Rod*	Ø Tubo *Ø Tube*	Price
KJSE032040025	25	32/40	£POA
KJSE040050030	30	40/50	£POA
KJSE045055035	35	45/55	£POA
KJSE050060040	40	50/60	£POA
KJSE050060045	45	50/60	£POA
KJSE055065050	50	55/65	£POA
KJSE060070055	55	60/70	£POA
KJSE065075060	60	65/75	£POA
KJSE065075060	60	65/75	£POA
KJSE080090070	70	80/90	£POA
KJSE100115090	90	100/115	£POA

* Otras medidas bajo consulta.
Other measures on request.

Kit de juntas / *Oil seal kit*

A Rascador metálico / *Metal wiper.*
B Collarín poliuretano / *Polyurethane rod seal.*
C Guías resina acetal / *Acetal resine guides.*
D Junta tórica 90 shores / *O-ring 90 shores.*
E Tuerca KM / *KM nut.*

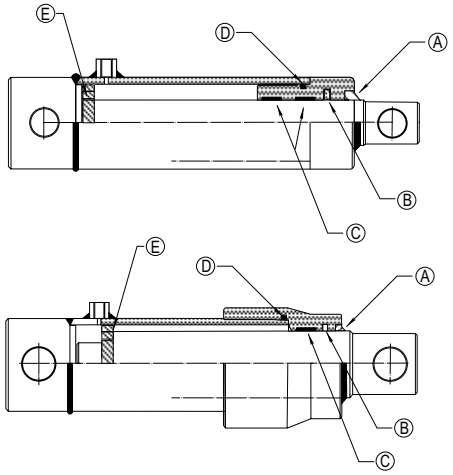

200 Series Seals Kit

Order Code	Ø Vástago *Ø Rod*	Ø Tubo *Ø Tube*	Price
KJDE032040020	20	32/40	£15.93
KJDE040050020	20	40/50	£20.52
KJDE040050025	25	40/50	£20.64
KJDE050060025	25	50/60	£21.15
KJDE050060030	30	50/60	£26.24
KJDE050060035	35	50/60	£POA
KJDE060070030	30	60/70	£28.75
KJDE060070035	35	60/70	£27.71
KJDE060070040	40	60/70	£24.32
KJDE070080035	35	70/80	£POA
KJDE070080040	40	70/80	£26.17
KJDE070080045	45	70/80	£27.75
KJDE070080050	50	70/80	£28.28
KJDE080090035	35	80/90	£33.04
KJDE080090040	40	80/90	£29.61

Order Code	Ø Vástago *Ø Rod*	Ø Tubo *Ø Tube*	Price
KJDE080090045	45	80/90	£30.23
KJDE080090050	50	80/90	£31.83
KJDE090100040	40	90/100	£37.38
KJDE090100045	45	90/100	£39.22
KJDE090100050	50	90/100	£45.32
KJDE090100060	60	90/100	£POA
KJDE100115050	50	100/115	£42.06
KJDE100115060	60	100/115	£45.90
KJDE100115070	70	100/115	£47.11
KJDE120140060	60	120/140	£POA
KJDE120140070	70	120/140	£48.37
KJDE120140080	80	120/140	£56.73
KJDE130150070	70	130/150	£POA
KJDE130150080	80	130/150	£60.92
KJDE130150090	90	130/150	£POA

* Otras medidas bajo consulta.
Other measures on request.

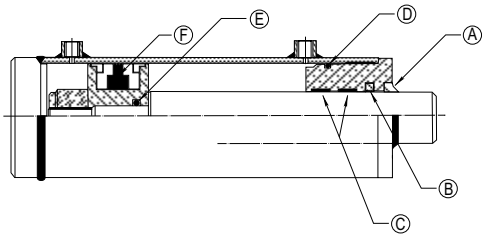

Kit de juntas / *Oil seal kit*

A Rascador metálico / *Metal wiper.*
B Collarín poliuretano / *Polyurethane rod seal.*
C Guías resina acetal / *Acetal resine guides.*
D Junta tórica 90 shores / *O-ring 90 shores.*
E Junta tórica 90 shores / *O-ring 90 shores.*
F Junta Pistón DBM / *DBM piston seal.*

50% OFF ALL PRICES

FLOWFIT LOG SPLITTER KITS

LOG SPLITTER KITS 414
5.5 HP LOGSPLITTER KIT 7.7 TON FORCE 414
9 HP LOGSPLITTER KIT 10 TON FORCE 415
13 HP LOGSPLITTER KIT 15.7 TON FORCE 415
20 HP LOGSPLITTER KIT 22 TON FORCE 416
OPTIONAL EXTRAS NOT INCLUDED IN BASIC KIT 416

Flowfit offer a range of Log-Splitting Components to suit a variety of size requirements and performances.

The components can be sized to suit portable Petrol Motor units and Tractor PTO set-ups.

The petrol units have four basic sizes – 5.5 HP, 9 HP, 13 HP and 20 HP and can be suited for use with Loncin and Honda and many other petrol engines.

The Flowfit Log Splitter Kit comes complete with a top quality Flowfit High-Low Pump that is designed to use the available horsepower in the most efficient manner with a fast approach at low pressure, and a slower splitting action at high pressure.

Besides the standard double acting log splitter valve supplied with each log splitter kit we also offer as an optional extra a 3/8 lever operated log splitter valve with autokick out function this is the most popular log splitter valve on the market and comes with a number of significant features, first pull the lever into the detent position (at this point no need to hold hand on the lever) the double acting hydraulic cylinder fully extends, the lever then automatically kicks out to neutral. You then push the lever into another detent position to return the double acting cylinder which does not kick out automatically. This action can be reversed to give the opposite action depending how you wish to operate your log splitter.

Flowfit have also included the following components for the three sizes of log-splitting system and is offering them as complete hydraulic component kit for new or rebuilt log-splitters.

FLOWFIT

All kits quoted below include the following:

Flowfit Hi-Low Pump

Flowfit Petrol Engine

Petrol Engine Adaptor Kit

Log splitter Double Acting Lever Valve

Filler Breather

Double Acting Hydraulic Cylinder

Level and temperature Indicator

Inline Return Line Filter

PLEASE NOTE THE FLOWFIT ENGINES ARE FULLY COMPATIBLE WITH WELL KNOWN BRANDS, PLEASE CHECK FOR DETAILS. IF YOU ALREADY HAVE YOUR OWN ENGINE AND WISH TO CHECK THE COMPATIBILITY YOU CAN GO TO OUR WEBSITE VIA THE FOLLOWING LINK WE HAVE DRAWINGS THAT DISPLAY THE ADAPTOR KITS SHOWING DIMENSIONAL DRAWINGS SO AS YOU CAN CHECK YOUR OWN ENGINE SHAFT AND ENGINE MOUNTING SUITABILITY. IF YOUR ENGINE TYPE IS NOT AVAILABLE PLEASE CALL OUR SALES TEAM WHO WILL QUOTE A SPECIAL ADAPTOR KIT.

5.5 HP LOGSPLITTER KIT 7.7 TON FORCE

ZZ001080 • 5.5 HP LONCIN LOGSPLITTER KIT

LOGSPLITTER KIT COMPRISES OF THE FOLLOWING.		
FT8C401	FILLER BREATHER 6 HOLE 40 MICR	1
FL2M12	127MM LEVEL INDICATOR M12 BOLT	1
200.0514.12.024	HDM140K02150A01L100	1
200.7022.1019.0	M8X150MM LEVER HDM140/HDM11/	1
A110C10	A110C10	1
GPCBN080PC	8GPM LOG SPLITTER HI-LO PUMP	1
M8X25CAPHEAD	M8X25CAPHEAD	8
M8X35CAPHEAD	M8 X 35MM CAPHEAD	4
M8SPRINGWASHER	M8SPRINGWASHER	12
M8NYLOCNUT	M8 NYLOCNUT	4
204/050	DA CYL 80/70/40/500	1
07.017.00006	FA-1-20/21-0-R-0 ALUMINUM RETU	1
BHE112/045A	LOGSPLITTER BELL HOUSING	1
HC219MC048	DRIVE COUPLING ENGINE HALF.	1
ER200	ER300 GP 3 D/COUPLING SPIDER	1
HC212HB035	DRIVE COUPLING PUMP HALF	1
R1	R1 INDICATOR TO SUIT FILTREC	1
LIST PRICE £854.36		

ZZ004719 • 5.5 HP HONDA LOGSPLITTER KIT

LOGSPLITTER KIT COMPRISES OF THE FOLLOWING.		
FT8C401	FILLER BREATHER 6 HOLE 40 MICR	1
FL2M12	127MM LEVEL INDICATOR M12 BOLT	1
200.0514.12.024	HDM140K02150A01L100	1
200.7022.1019.0	M8X150MM LEVER HDM140/HDM11/	1
A110C10	A110C10	1
GPCBN080PC	8GPM LOG SPLITTER HI-LO PUMP	1
M8X25CAPHEAD	M8X25CAPHEAD	8
M8X35CAPHEAD	M8 X 35MM CAPHEAD	4
M8SPRINGWASHER	M8SPRINGWASHER	12
M8NYLOCNUT	M8 NYLOCNUT	4
204/050	DA CYL 80/70/40/500	1
07.017.00006	FA-1-20/21-0-R-0 ALUMINUM RETU	1
BHE112/045A	LOGSPLITTER BELL HOUSING	1
HC219MC048	DRIVE COUPLING ENGINE HALF.	1
ER200	ER300 GP 3 D/COUPLING SPIDER	1
HC212HB035	DRIVE COUPLING PUMP HALF	1
R1	R1 INDICATOR TO SUIT FILTREC	1
GX160UT1QX4	5.5HP **HONDA** PETROL ENGINE	1
LIST PRICE £1223.24		

OPERATIONAL DETAILS

At 3000 rpm and 3045 psi-210 bar this system will give 7.7 tons approx of cutting force.

The Low Pressure Cylinder Extension Time = Approx 4 seconds.
The High Pressure Cylinder Extension Time = Approx 8 seconds.
The Cylinder Retraction Time = Approx 4.5 seconds.
Cylinder speeds will alter with size of log and speed of engine.

ABOVE KIT WILL FIT ONTO THE FOLLOWING ENGINES:

HONDA GX160Q AND HONDA GX200Q.

LONCIN G160FQ AND LONCIN G200FQ.

FUJI ROBIN EY15 AND EX15.

9 HP LOGSPLITTER KIT 10 TON FORCE

ZZ001081 • 9 HP LONCIN LOGSPLITTER KIT		
LOGSPLITTER KIT COMPRISES OF THE FOLLOWING.		
GPCBN110PC	11GPM LOG SPLITTER HI-LO PUMP	1
FT8C401	FILLER BREATHER 6 HOLE 40 MICR	1
FL2M12	127MM LEVEL INDICATOR M12 BOLT	1
200.0611.13.042	HDM11S1K03150A01L100 (1/2)	1
200.7022.1019.0	M8X150MM LEVER HDM140/HDM11/	1
205/050	DA CYL 90/80/40/500	1
G270F-P	LONCIN 9HP PETROL ENGINE.	1
A110C10	A110C10	1
07.017.00006	FA-1-20/21-0-R-0 ALUMINUM RETU	1
BHE112/045A	LOGSPLITTER BELL HOUSING	1
HC319MC048	DRIVE COUPLING ENGINE HALF.	1
ER300	ER300 GP 3 D/COUPLING SPIDER	1
HC312HB035	DRIVE COUPLING PUMP HALF	1
R1	R1 INDICATOR TO SUIT FILTREC	1
LIST PRICE £1168.12		

OPERATIONAL DETAILS

At 3000 rpm and 3045 psi-210 bar this system will give 10 tons approx of cutting force.

The Low Pressure Cylinder Extension Time = Approx 4 seconds.
The High Pressure Cylinder Extension Time = Approx 8 seconds.
The Cylinder Retraction Time = Approx 4.5 seconds.
Cylinder speeds will alter with size of log and speed of engine.

ZZ004720 • 9 HP HONDA LOGSPLITTER KIT		
LOGSPLITTER KIT COMPRISES OF THE FOLLOWING.		
GPCBN110PC	11GPM LOG SPLITTER HI-LO PUMP	1
FT8C401	FILLER BREATHER 6 HOLE 40 MICR	1
FL2M12	127MM LEVEL INDICATOR M12 BOLT	1
200.0611.13.042	HDM11S1K03150A01L100 (1/2)	1
200.7022.1019.0	M8X150MM LEVER HDM140/HDM11/	1
205/050	DA CYL 90/80/40/500	1
A110C10	A110C10	1
07.017.00006	FA-1-20/21-0-R-0 ALUMINUM RETU	1
BHE112/045A	LOGSPLITTER BELL HOUSING	1
HC319MC048	DRIVE COUPLING ENGINE HALF.	1
ER300	ER300 GP 3 D/COUPLING SPIDER	1
HC312HB035	DRIVE COUPLING PUMP HALF	1
R1	R1 INDICATOR TO SUIT FILTREC	1
GX270UT2QXQ4	9.5HP **HONDA** PETROL ENGINE	1
LIST PRICE £2073.36		

ABOVE KITS WILL FIT ONTO THE FOLLOWING ENGINES:

HONDA GX240Q, HONDA GX270Q, HONDA GX340Q AND HONDA GX390Q.

LONCIN G240FQ, LONCIN G270FQ,LONCIN G340FQ AND LONCIN G390FQ.

FUJI ROBIN EY30 AND EX30.

13 HP LOGSPLITTER KIT 15.7 TON FORCE

ZZ001082 • 13 HP LONCIN LOGSPLITTER KIT		
LOGSPLITTER KIT COMPRISES OF THE FOLLOWING.		
GPCBN160PC	16GPM LOG SPLITTER HI-LO PUMP	1
FL2M12	127MM LEVEL INDICATOR M12 BOLT	1
200.7022.2001.0	M10X185 LEVER HDS15/HDS20	1
206/060	DA CYL 100/90/50/600	1
p	13HP LONCIN PETROL ENGINE	1
200.0718.13.002	“HDM181K02150A08L100 1/2”“”	1
BHE152/045A	LOGSPLITTER BELL HOUSING	1
ER300	ER300 GP 3 D/COUPLING SPIDER	1
HC312HB035	DRIVE COUPLING PUMP HALF	1
HC325NC048	DRIVE COUPLING ENGINE HALF	1
A120C10	A120C10	1
07.017.00006	FA-1-20/21-0-R-0 ALUMINUM RETU	1
R1	R1 INDICATOR TO SUIT FILTREC	1
FT8C401	FILLER BREATHER 6 HOLE 40 MICR	1
LIST PRICE £1420.40		

OPERATIONAL DETAILS

At 3000 rpm and 3045 psi-210 bar this system will give 15.7 tons approx of cutting force.

The Low Pressure Cylinder Extension Time = Approx 4 seconds.
The High Pressure Cylinder Extension Time = Approx 6 seconds
The Cylinder Retraction Time = Approx 3 seconds.
Cylinder speeds will alter with size of log and speed of engine.

ZZ004721 • 13 HP HONDA LOGSPLITTER KIT		
LOGSPLITTER KIT COMPRISES OF THE FOLLOWING.		
GPCBN160PC	16GPM LOG SPLITTER HI-LO PUMP	1
FL2M12	127MM LEVEL INDICATOR M12 BOLT	1
200.7022.2001.0	M10X185 LEVER HDS15/HDS20	1
206/060	DA CYL 100/90/50/600	1
200.0718.13.002	“HDM181K02150A08L100 1/2”“”	1
BHE152/045A	LOGSPLITTER BELL HOUSING	1
ER300	ER300 GP 3 D/COUPLING SPIDER	1
HC312HB035	DRIVE COUPLING PUMP HALF	1
HC325NC048	DRIVE COUPLING ENGINE HALF	1
A120C10	A120C10	1
07.017.00006	FA-1-20/21-0-R-0 ALUMINUM RETU	1
FT8C401	FILLER BREATHER 6 HOLE 40 MICR	1
R1	R1 INDICATOR TO SUIT FILTREC	1
GX390UT2QXQ4	13HP **HONDA** PETROL ENGINE	1
LIST PRICE £2162.40		

ABOVE KITS WILL FIT ONTO THE FOLLOWING ENGINES:

HONDA GX240Q, HONDA GX270Q, HONDA GX340Q AND HONDA GX390Q.

LONCIN G240FQ, LONCIN G270FQ,LONCIN G340FQ AND LONCIN G390FQ.

FUJI ROBIN EY30 AND EX30.

20 HP LOGSPLITTER KIT 22 TON FORCE

ZZ004717 • 20 HP LONCIN LOGSPLITTER KIT		
LOGSPLITTER KIT COMPRISES OF THE FOLLOWING.		
208/050	DA CYL 140/120/70/500	1
LC2V78FD	20HP V TWIN ENGINE LONCIN	1
GPCBN220PC	22GPM LOG SPLITTER HI-LO PUMP	1
200.0725.14.001	HDM25/1K03 150/A01L100	1
200.7022.2001.0	M10X185 LEVER HDS15/HDS20	1
FT8C401	FILLER BREATHER 6 HOLE 40 MICR	1
FL3M10	254MM LEVEL INDICATOR M10 BOLT	1
BELLHOUSING/COUPLING	BELLHOUSING/COUPLING	1
A120C10	A120C10	1
07.017.00006	FA-1-20/21-0-R-0 ALUMINUM RETU	1
R1	R1 INDICATOR TO SUIT FILTREC	1
LIST PRICE £3158.80		

ZZ004722 • 20 HP HONDA LOGSPLITTER KIT		
LOGSPLITTER KIT COMPRISES OF THE FOLLOWING.		
208/050	DA CYL 140/120/70/500	1
GPCBN220PC	22GPM LOG SPLITTER HI-LO PUMP	1
200.0725.14.001	HDM25/1K03 150/A01L100	1
200.7022.2001.0	M10X185 LEVER HDS15/HDS20	1
FT8C401	FILLER BREATHER 6 HOLE 40 MICR	1
FL3M10	254MM LEVEL INDICATOR M10 BOLT	1
BELLHOUSING/COUPLING	BELLHOUSING/COUPLING	1
A120C10	A120C10	1
07.017.00006	FA-1-20/21-0-R-0 ALUMINUM RETU	1
R1	R1 INDICATOR TO SUIT FILTREC	1
GX630-F-M	20HP **HONDA** ENGINE WITH RECOIL	1
06183-Z6L-B0F-L	EXHAUST TO SUTI GX630 LEFT	1
LIST PRICE £5134.64		

OPERATIONAL DETAILS

At 3000 rpm and 3045 psi-210 bar this system will give 22.7 tons approx of cutting force.

The Low Pressure Cylinder Extension Time = Approx 6 seconds.
The High Pressure Cylinder Extension Time = Approx 9 seconds
The Cylinder Retraction Time = Approx 4 seconds.
Cylinder speeds will alter with size of log and speed of engine.

ABOVE KITS WILL FIT ONTO THE FOLLOWING ENGINES:

HONDA GX240Q, HONDA GX270Q, HONDA GX340Q AND HONDA GX390Q.

LONCIN G240FQ, LONCIN G270FQ,LONCIN G340FQ AND LONCIN G390FQ.

FUJI ROBIN EY30 AND EX30.

OPTIONAL EXTRAS NOT INCLUDED IN BASIC KIT:

Auto Kickout
Valve Lever Operated

55 Litre Reservoir
75 Litre Reservoir
100 Litre Reservoir

58 Litre Reservoir
75 Litre Reservoir
100 Litre Reservoir
Complete
with Tank Accessories

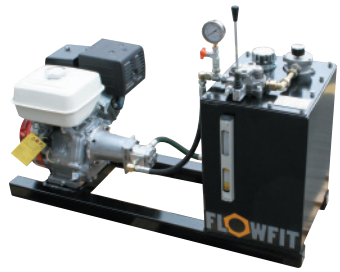

BETTER STILL WE OFFER COMPLETE STAND ALONE UNITS MOUNTED ON A H FRAME AS ABOVE

OR WHY NOT HAVE YOUR FILLER BREATHER, LEVEL INDICATOR AND RETURN LINE FILTER FITTED AND THE RESERVOIR SPRAYED AND READY ASSEMBLED.

Please ask Technical Sales for a quote.

ALL PRICES ARE EACH PLUS VAT.

BELL HOUSINGS AND DRIVE COUPLINGS FOR ELECTRIC MOTORS

FLOWFIT BELL HOUSINGS FOR ELECTRIC MOTORS.....418
FLOWFIT DRIVE COUPLINGS FOR ELECTRIC MOTORS.....419

FLOWFIT

FLOWFIT BELL HOUSINGS

FOR USE WITH GALTECH AND BUCHER GEAR PUMPS AND ANY OTHER GEAR PUMP DESIGNS. PLEASE CHECK DIMENSIONS TO ENSURE THEY FIT YOUR GEAR PUMP.

NEW PT NO	GEAR PUMP GROUP	ELECTRIC MOTOR SIZE B5 4 POLE KW RATING	MOTOR FRAME SIZE	DRAWING KIT NUMBER SEE BELOW	LIST PRICE
BH4057	GP1-1SPA-AP100	0.18KW	D63	1	£38.26
BH4061	GP1-1SPA-AP100	0.25-0.37KW	D71	2	£38.26
BH4116	GP1-1SPA-AP100	0.55-0.75KW	D80	3	£48.74
BH4115	GP1-1SPA-AP100	1.1-1.5KW	D90	4	£48.74
BH4174	GP1-1SPA-AP100	2.2-4KW	D100/D112	5	£66.55
BH4104	GP2-2SPA-AP200	0.25KW	D71	6	£120.01
BH4141	GP2-2SPA-AP200	0.55-0.75KW	D80	7	£51.87
BH4141	GP2-2SPA-AP200	1.1-1.5KW	D90	8	£51.87
BH4177	GP2-2SPA-AP200	2.2-4KW	D100/D112	9	£66.55
BH4202	GP2-2SPA-AP200	5.5-7.5KW	D132	10	£107.43
BH4212	GP2-2SPA-AP200	11-15KW	D160	11	£123.16
BH4212	GP2-2SPA-AP200	18.5-22KW	D180	12	£126.34
BH4239	GP2-2SPA-AP200	30KW	D200	13	£285.09
BH4148	GP3-3SPA-AP300	1.1-1.5KW	D90	14	£171.89
BH4184	GP3-3SPA-AP300	2.2-4KW	D100/D112	15	£69.70
BH4205	GP3-3SPA-AP300	5.5-7.5KW	D132	16	£107.43
BH4223	GP3-3SPA-AP300	11-15KW	D160	17	£165.08
BH4223	GP3-3SPA-AP300	18.5-22KW	D180	18	£165.08
BH4251	GP3-3SPA-AP300	30KW	D200	19	£285.09
BH4267	GP3-3SPA-AP300	37-45kw	D225	20	£434.99
BH4278	GP3-3SPA-AP300	55KW	D250	21	£649.86

FLOWFIT DRIVE COUPLINGS

GEAR PUMP GROUP	ELECTRIC MOTOR SIZE B5 4 POLE KW RATING	MOTOR FRAME SIZE	MOTOR HALF ONLY	LIST PRICE	PUMP HALF ONLY	PUMP KEYWAY WIDTH	LIST PRICE	SPIDER ONLY	LIST PRICE	DRAWING KIT NUMBER SEE BELOW
GP1-1SPA-AP100	0.18KW	D63	MH6038	£32.03	PH6090	2.4MM	£13.10	SP6000	£4.19	1
GP1-1SPA-AP100	0.25-0.37KW	D71	MH6017	£12.57	PH6090	2.4MM	£13.10	SP6000	£4.19	2
GP1-1SPA-AP100	0.55-0.75KW	D80	MH6021	£12.57	PH6090	2.4MM	£13.10	SP6000	£4.19	3
GP1-1SPA-AP100	1.1-1.5KW	D90	MH6024	£12.57	PH6090	2.4MM	£13.10	SP6000	£4.19	4
GP1-1SPA-AP100	2.2-4KW	D100/D112	MH6313	£22.51	PH6350	2.4MM	£19.38	SP6250	£5.24	5
GP2-2SPA-AP200	0.25KW	D71	MH6273	£19.91	PH6352	3.17MM	£19.38	SP6250	£5.24	6
GP2-2SPA-AP200	0.55-0.75KW	D80	MH6277	£19.91	PH6352	3.17MM	£19.38	SP6250	£5.24	7
GP2-2SPA-AP200	1.1-1.5KW	D90	MH6280	£19.91	PH6352	3.17MM	£19.38	SP6250	£5.24	8
GP2-2SPA-AP200	2.2-4KW	D100/D112	MH6313	£22.66	PH6352	3.17MM	£19.38	SP6250	£5.24	9
GP2-2SPA-AP200	5.5-7.5KW	D132	MH6540	£27.24	PH6570	3.17MM	£23.04	SP6500	£8.38	10
GP2-2SPA-AP200	11-15KW	D160	MH6781	£44.02	PH6840	3.17MM	£40.34	SP6750	£11.00	11
GP2-2SPA-AP200	18.5-22KW	D180	MH7141	£62.88	PH7170	3.17MM	£57.64	SP7000	£17.29	12
GP2-2SPA-AP200	30KW	D200	MH7162	£99.05	PH7170	3.17MM	£57.64	SP7000	£17.29	13
GP3-3SPA-AP300	1.1-1.5KW	D90	MH6312	£22.53	PH6354	4MM	£23.04	SP6250	£5.24	14
GP3-3SPA-AP300	2.2-4KW	D100/D112	MH6301	£19.91	PH6354	4MM	£23.04	SP6250	£5.24	15
GP3-3SPA-AP300	5.5-7.5KW	D132	MH6540	£27.32	PH6572	4MM	£23.04	SP6500	£8.38	16
GP3-3SPA-AP300	11-15KW	D160	MH6781	£44.02	PH6832	4MM	£40.34	SP6750	£11.00	17
GP3-3SPA-AP300	18.5-22KW	D180	MH7141	£62.88	PH7172	4MM	£57.64	SP7000	£17.29	18
GP3-3SPA-AP300	30KW	D200	MH7162	£99.05	PH7172	4MM	£57.64	SP7000	£17.29	19
GP3-3SPA-AP300	37-45KW	D225	MH7355	£157.23	PH7369	4MM	£123.16	SP7200	£23.59	20
GP3-3SPA-AP300	55KW	D250	MH7444	£193.38	PH7495	4MM	£157.23	SP7400	£41.81	21

DRAWING KIT NUMBER 1

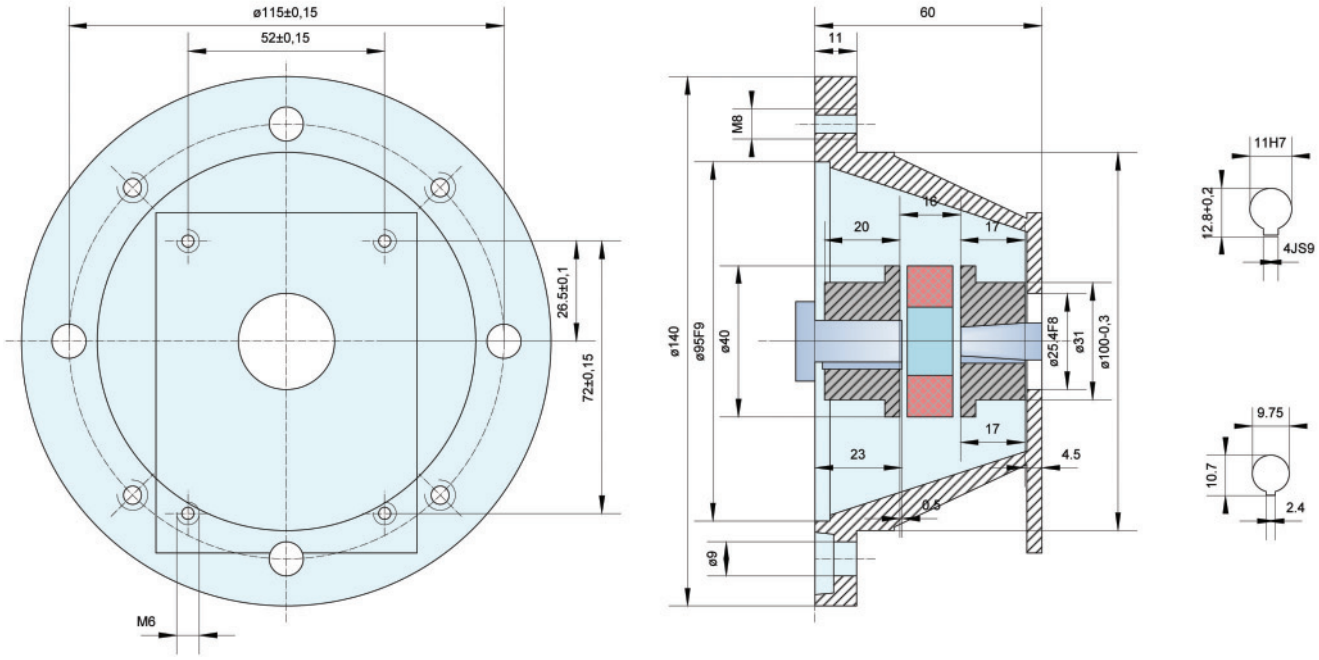

DRAWING KIT NUMBER 2

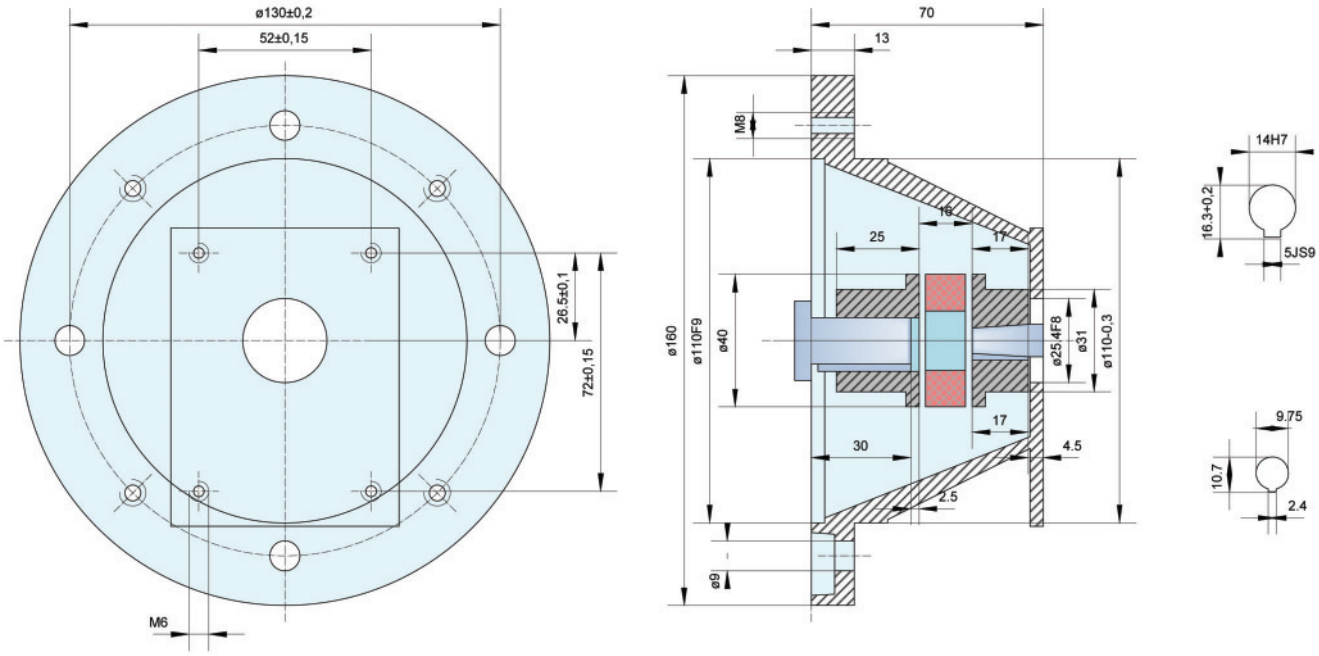

DRAWING KIT NUMBER 3

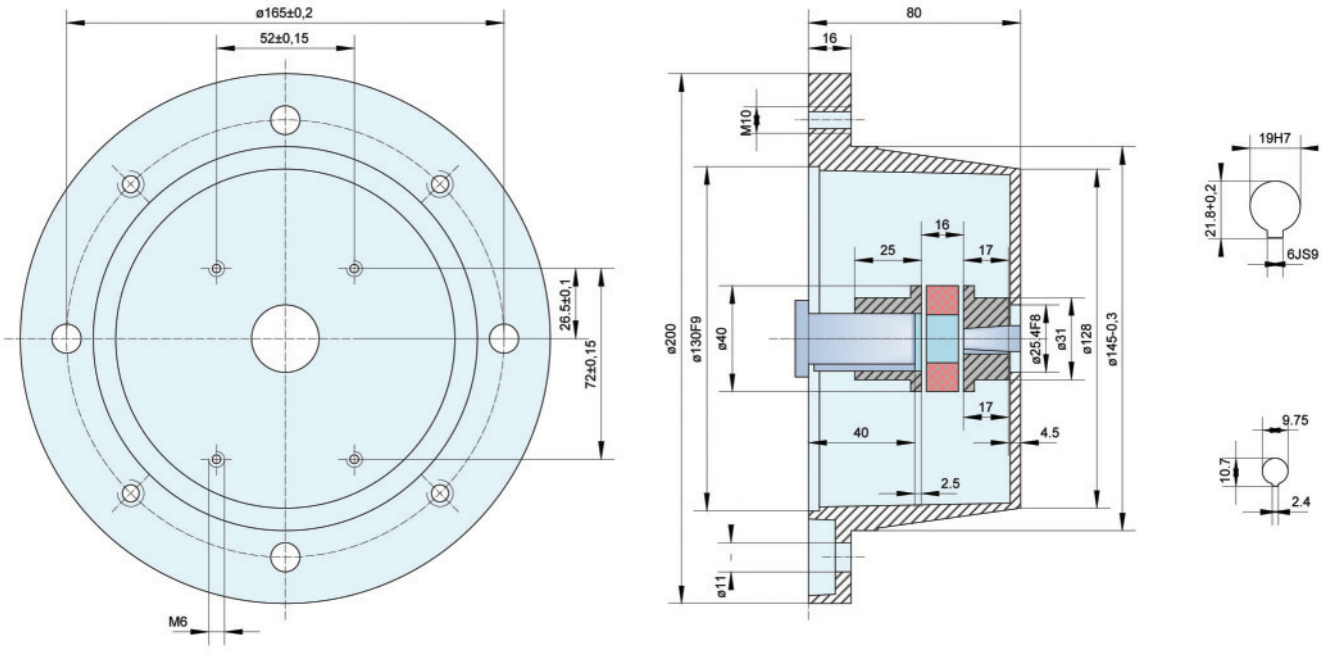

DRAWING KIT NUMBER 4

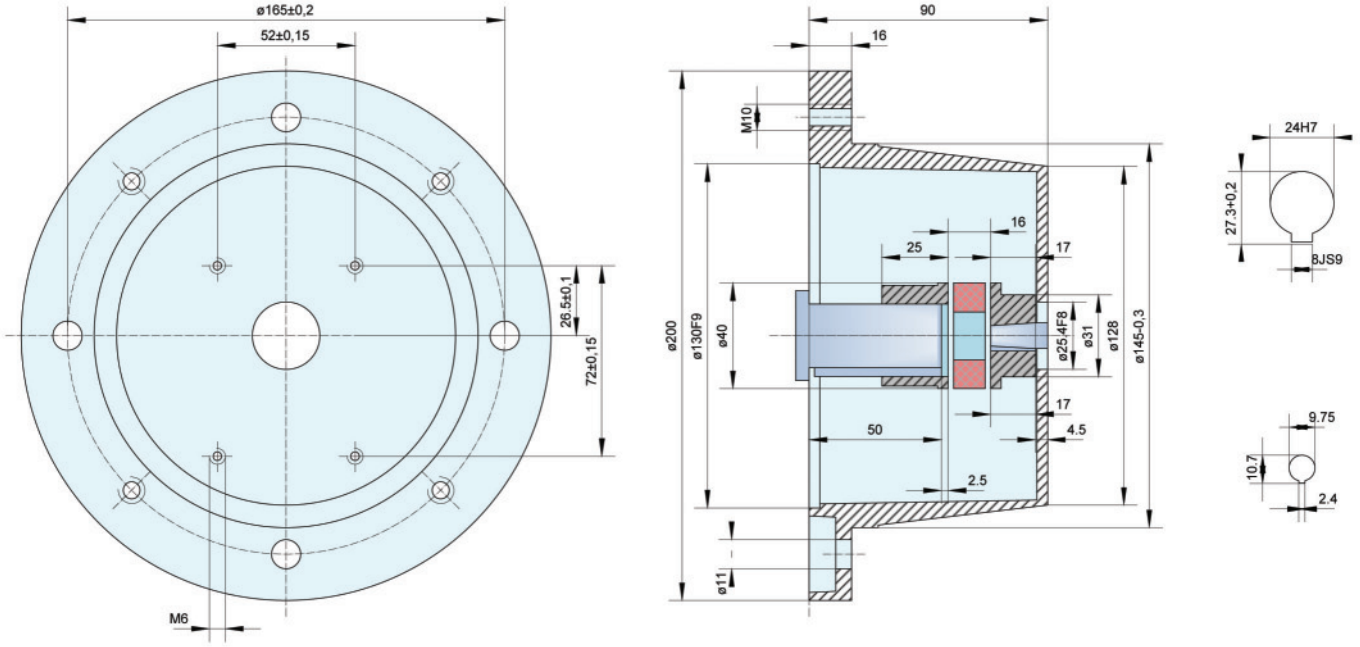

DRAWING KIT NUMBER 5

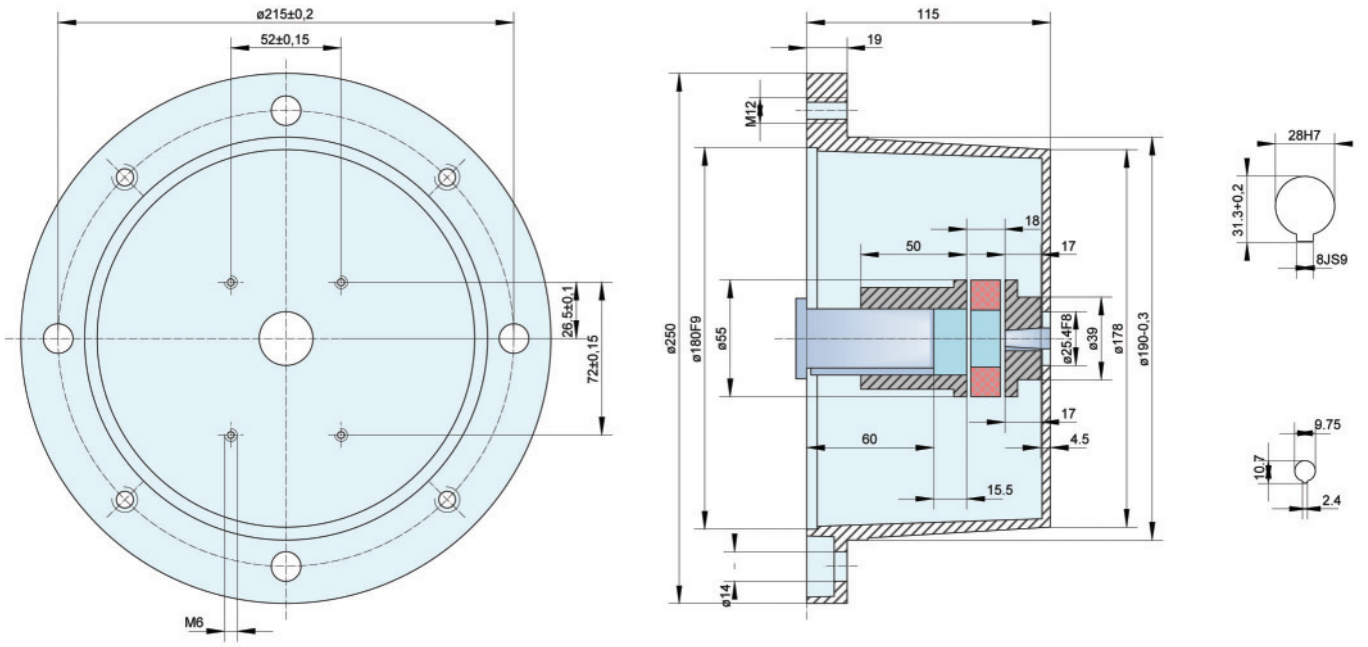

DRAWING KIT NUMBER 6

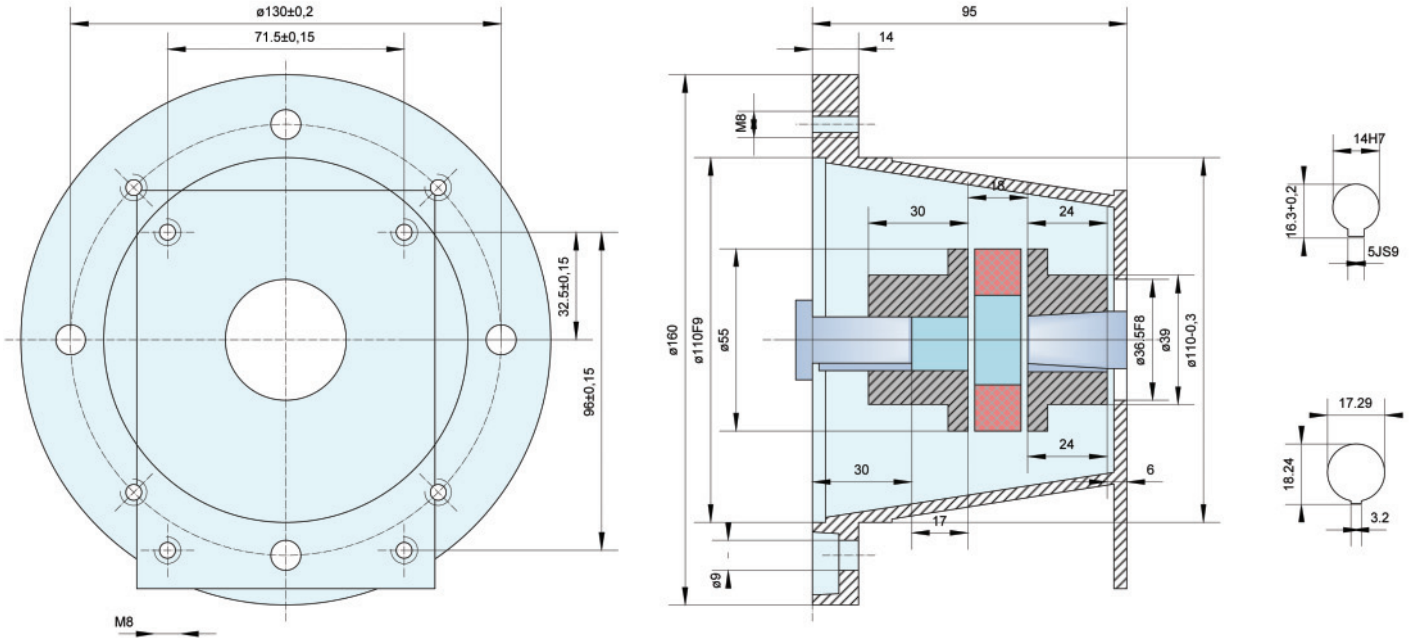

DRAWING KIT NUMBER 7

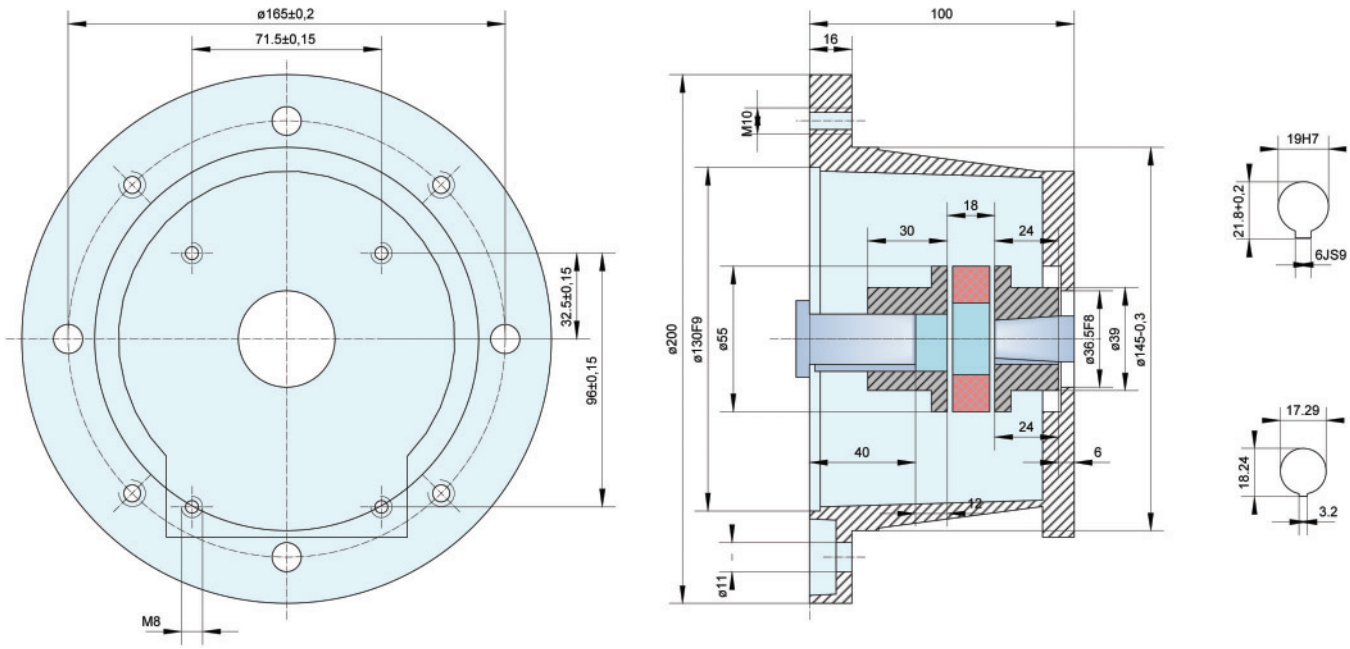

DRAWING KIT NUMBER 8

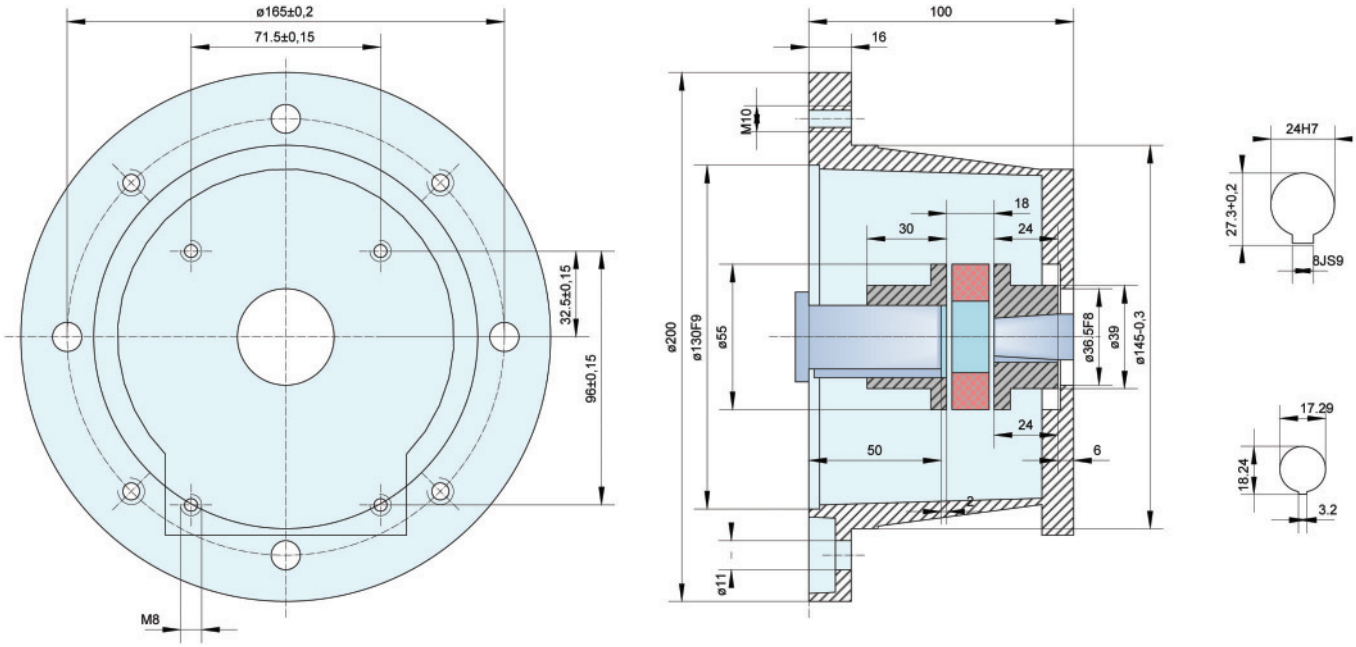

DRAWING KIT NUMBER 9

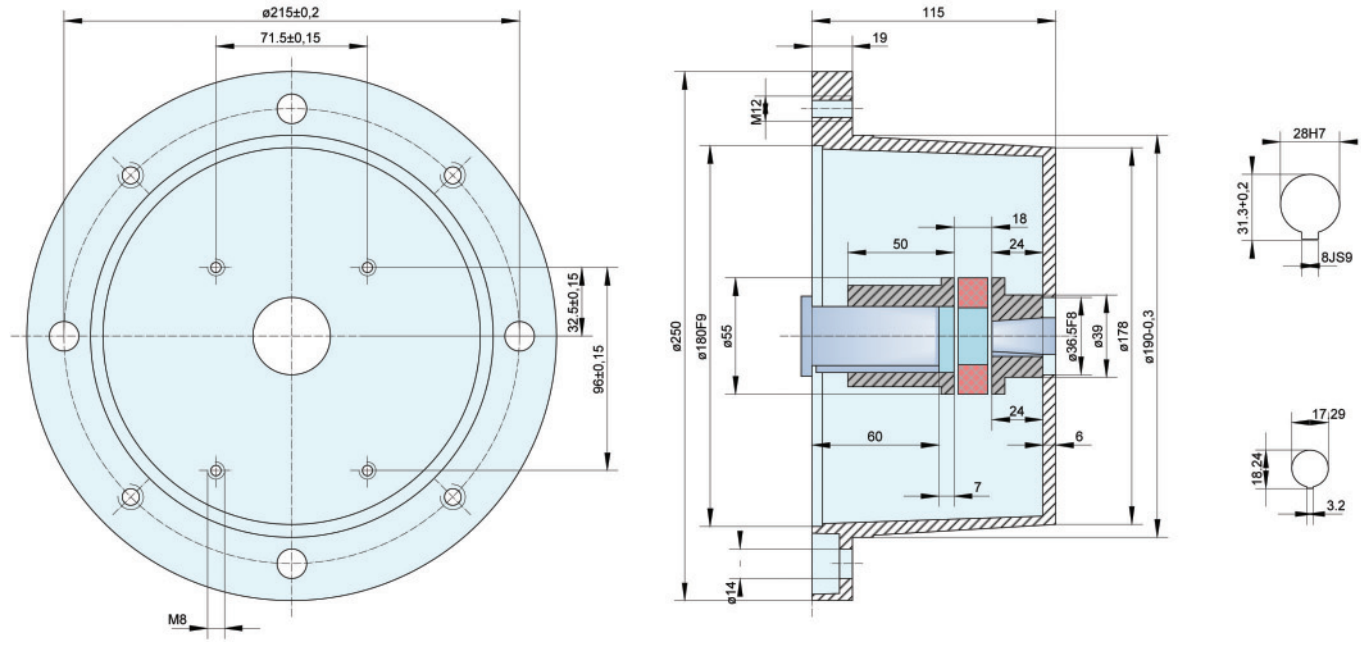

DRAWING KIT NUMBER 10

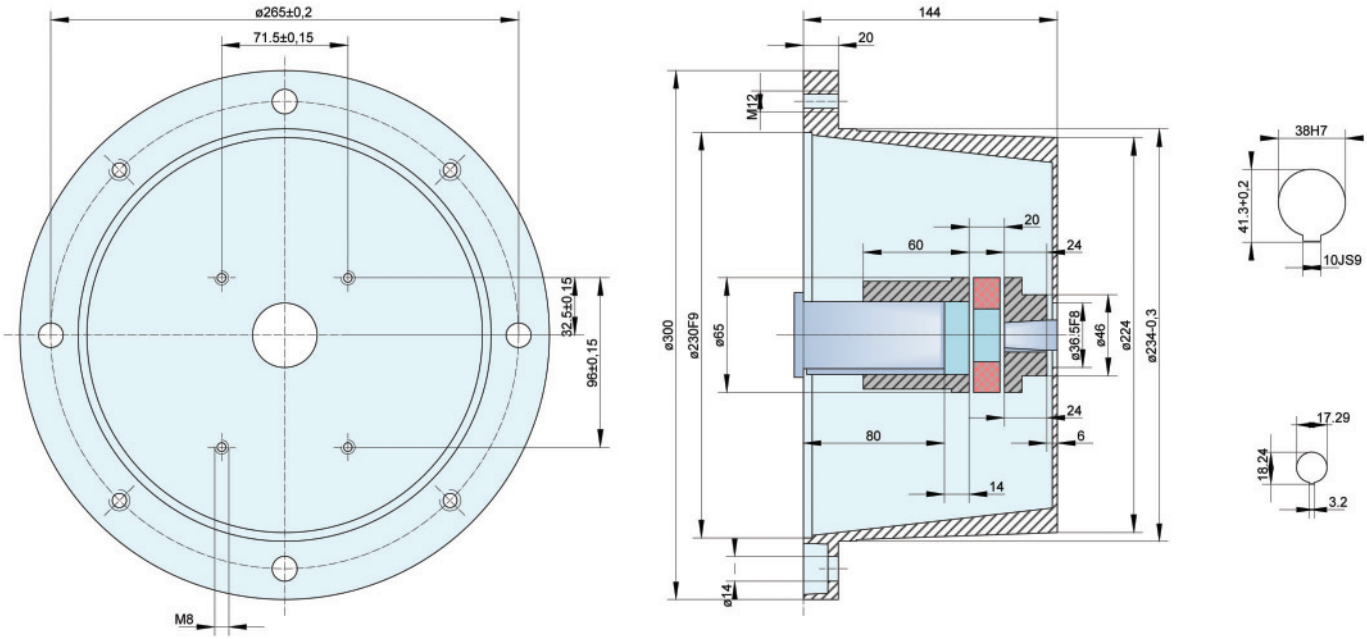

DRAWING KIT NUMBER 11

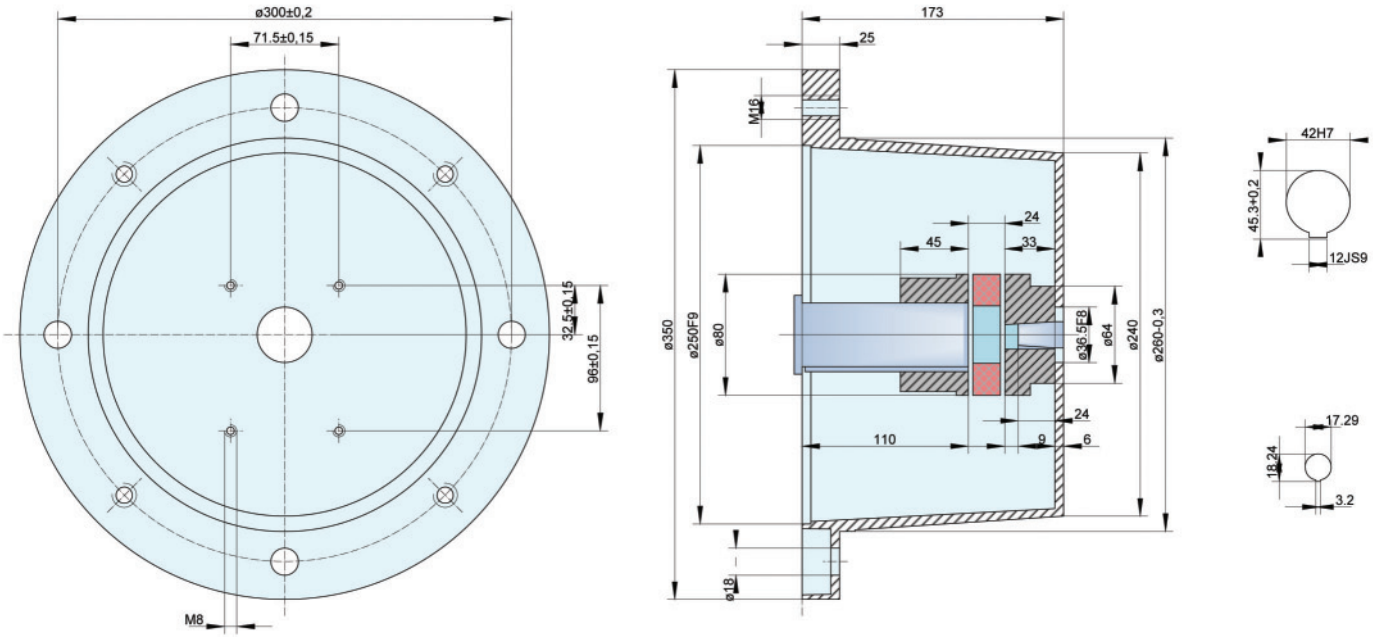

DRAWING KIT NUMBER 12

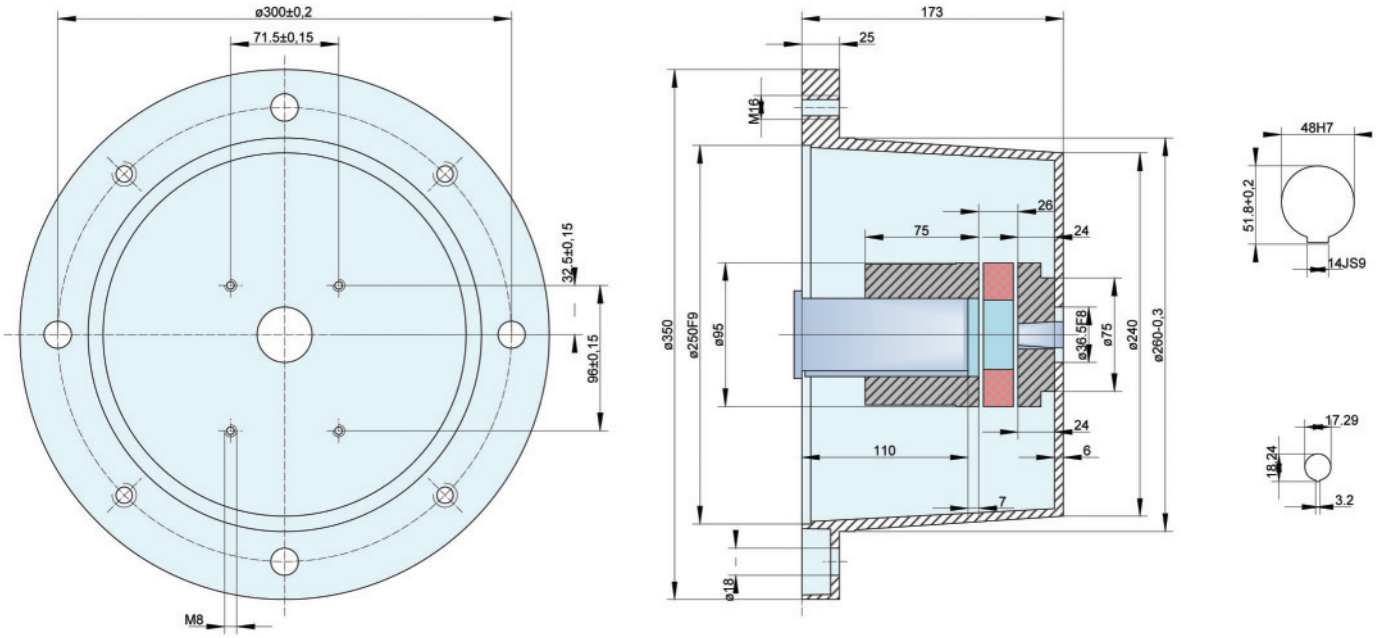

DRAWING KIT NUMBER 13

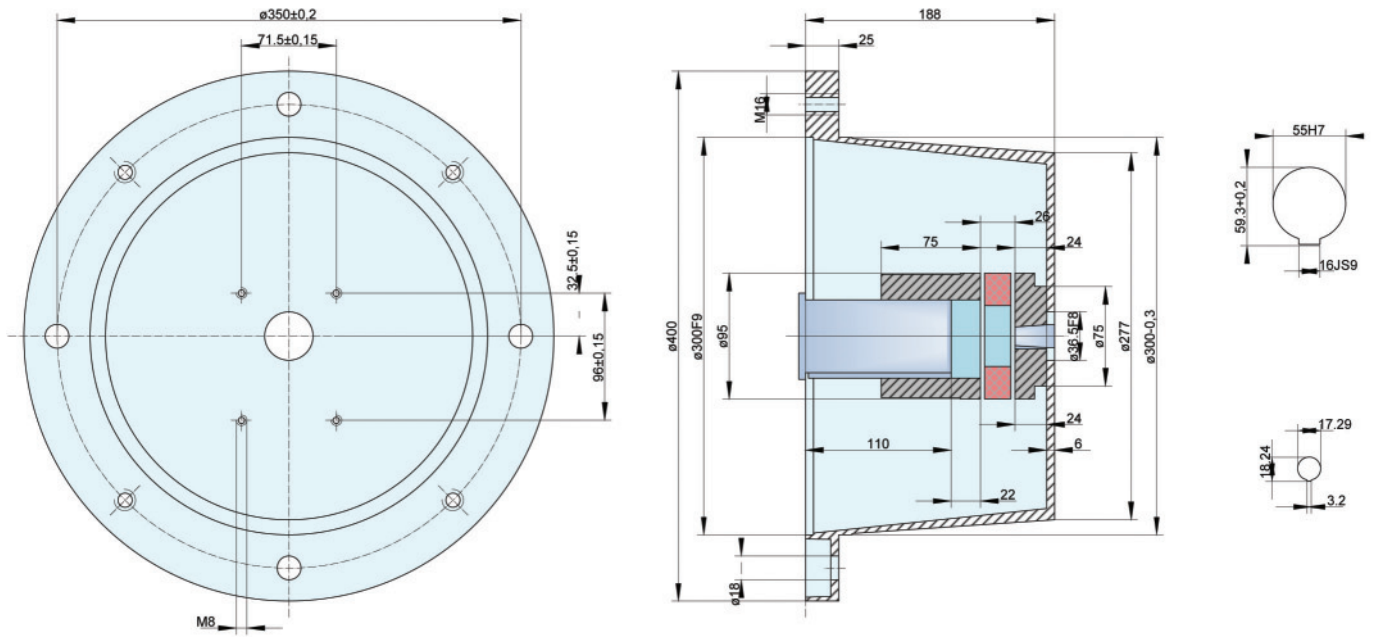

DRAWING KIT NUMBER 14

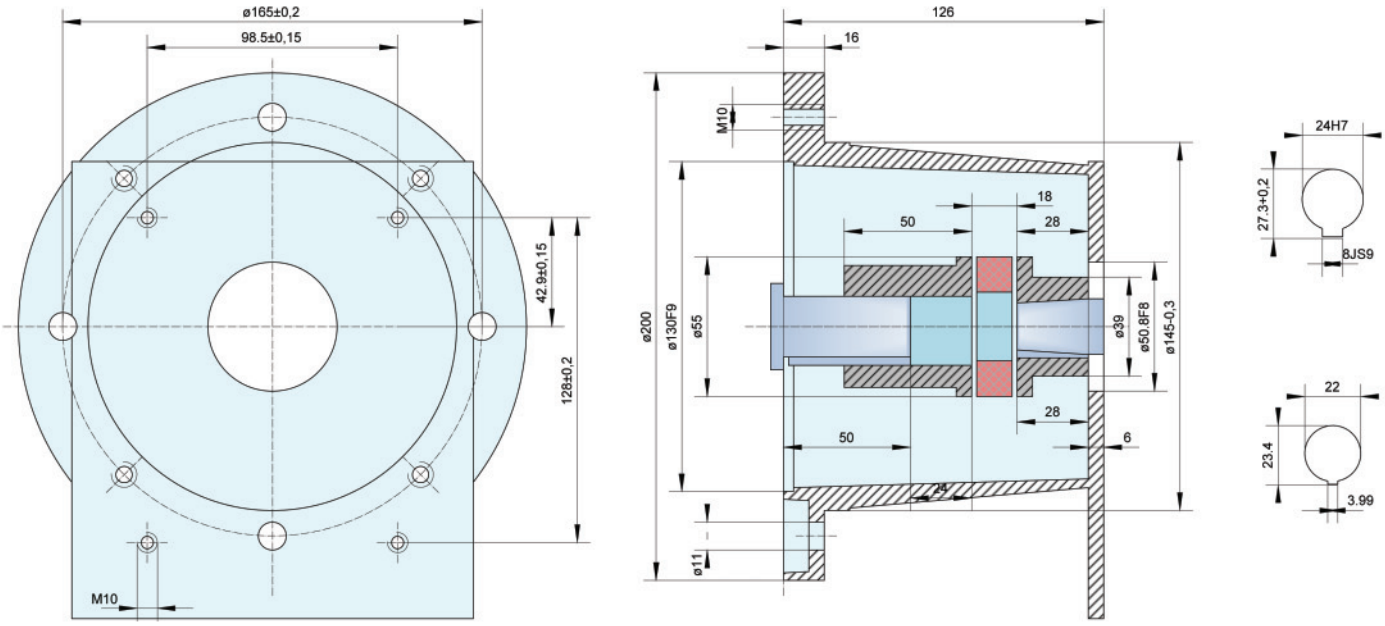

DRAWING KIT NUMBER 15

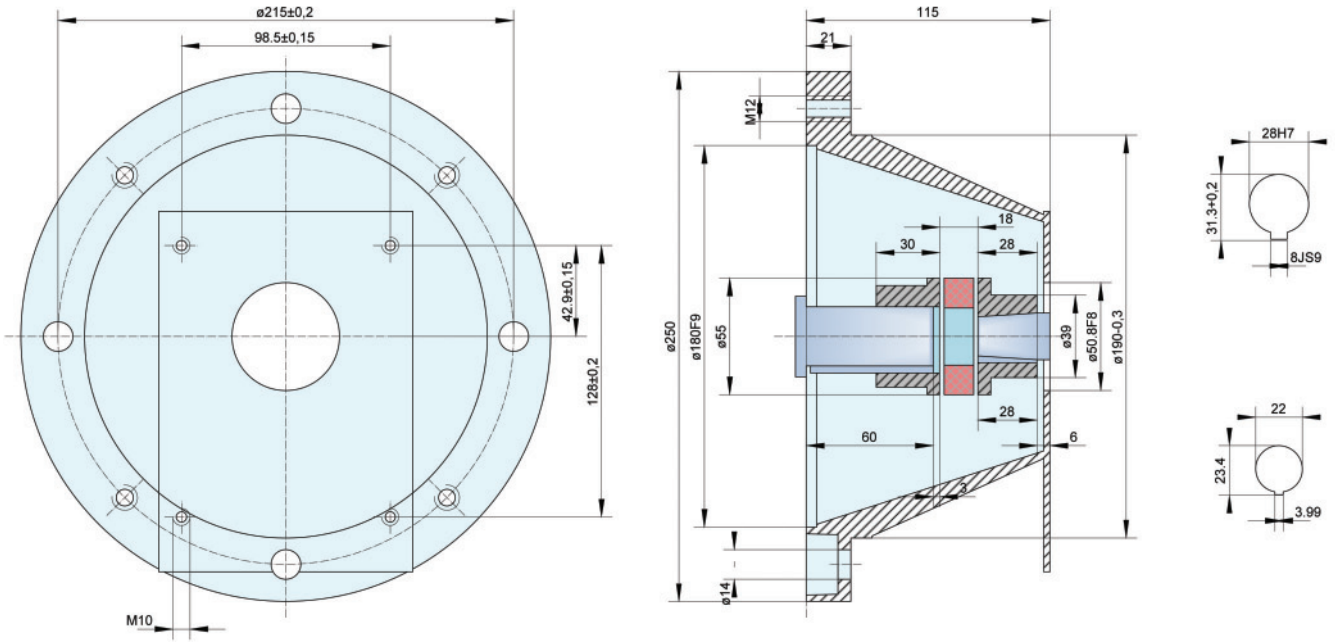

DRAWING KIT NUMBER 16

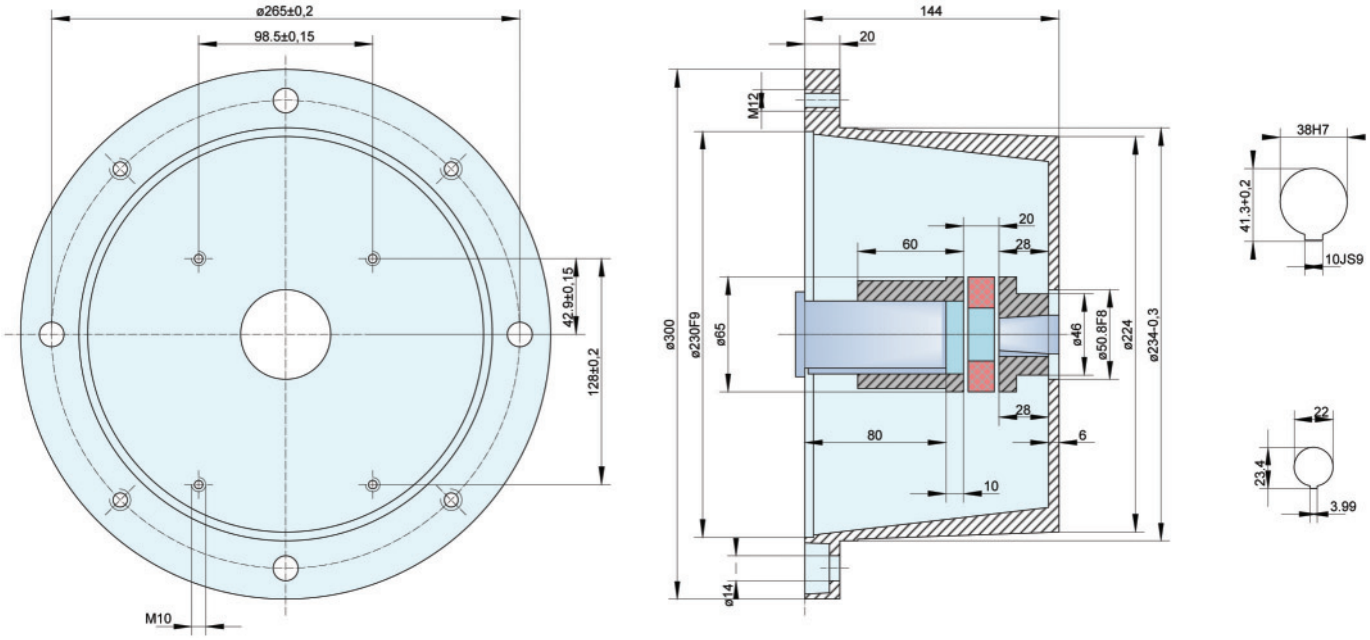

DRAWING KIT NUMBER 17

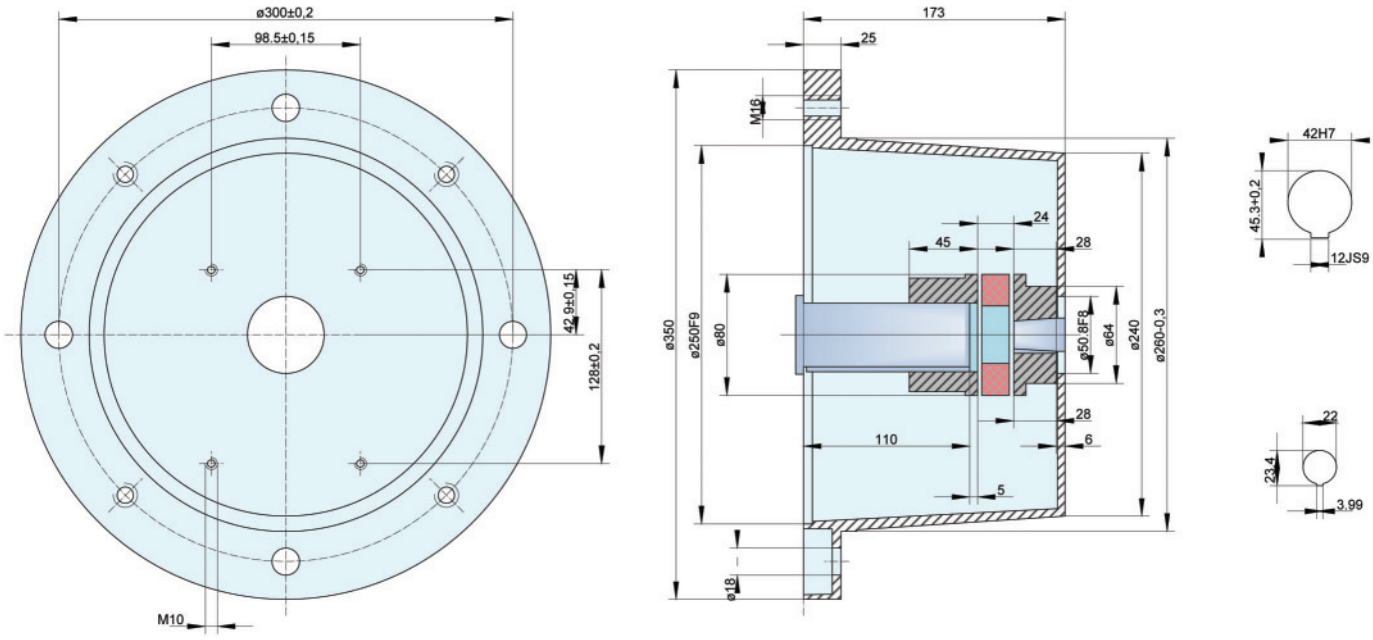

DRAWING KIT NUMBER 18

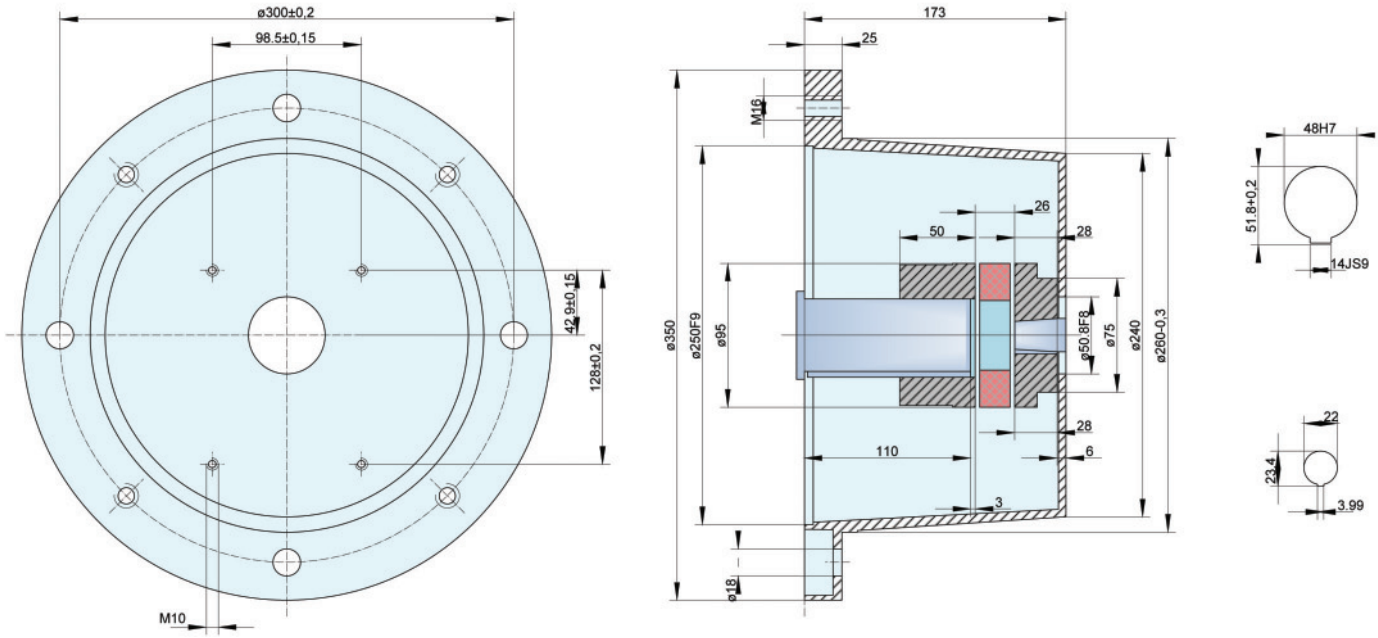

DRAWING KIT NUMBER 19

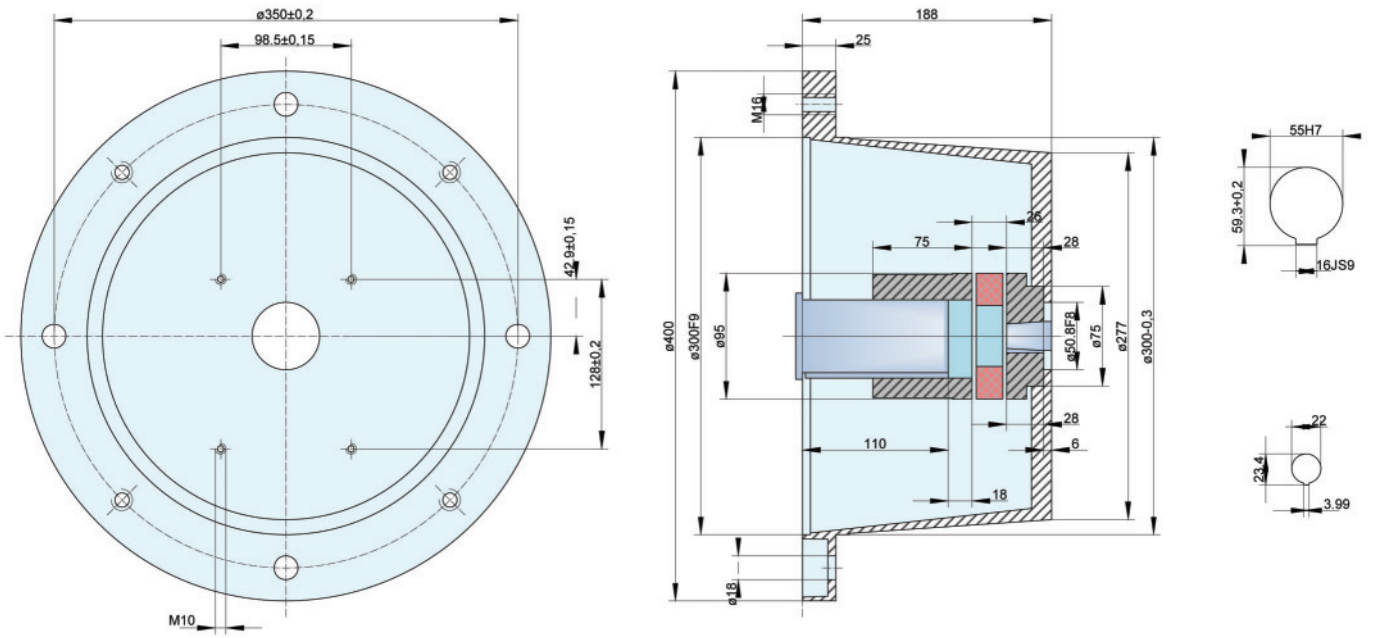

DRAWING KIT NUMBER 20

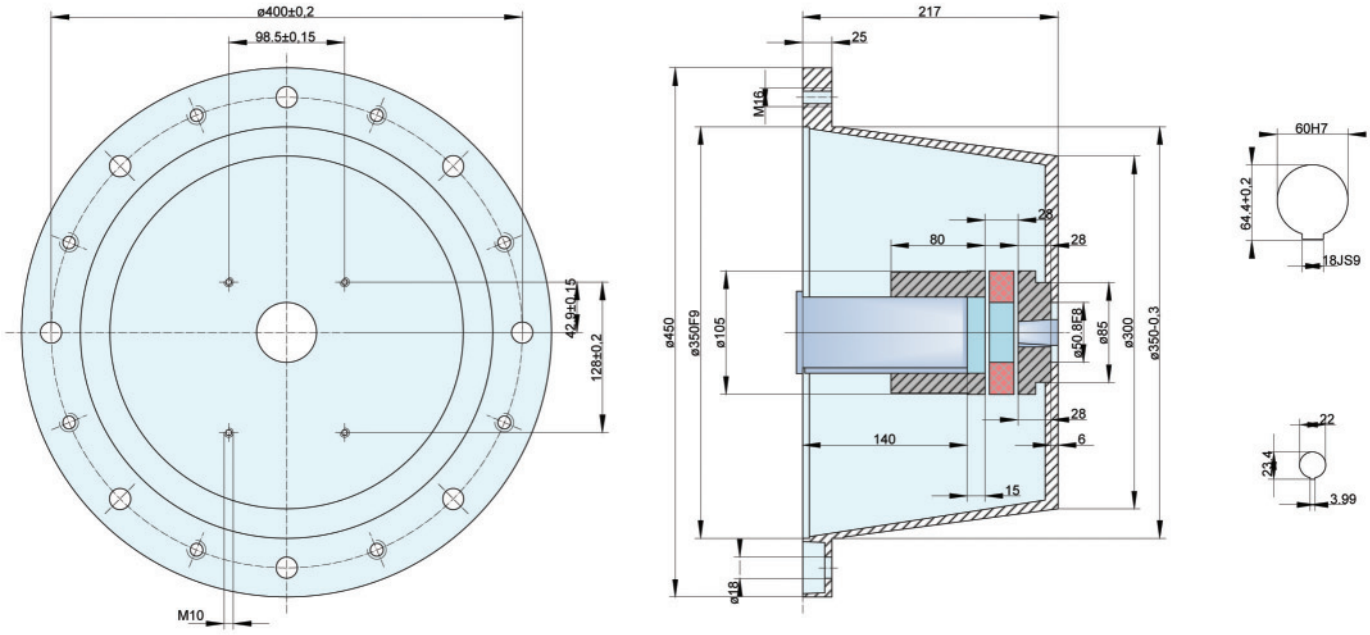

DRAWING KIT NUMBER 21

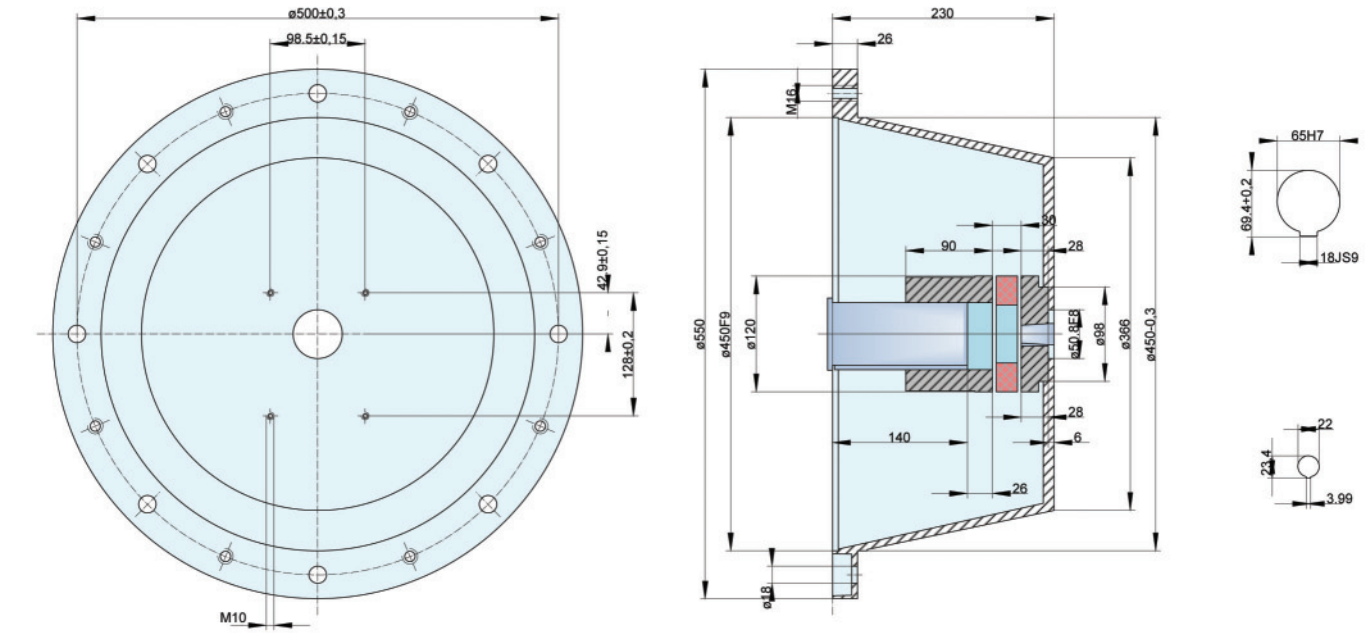

PETROL + DIESEL ENGINE BELL HOUSING AND DRIVE COUPLING KITS

PETROL ENGINE BELL HOUSING AND DRIVE COUPLING KITS.....431
DIESEL ENGINE BELL HOUSING AND DRIVE COUPLING KITS.....437

ZZ004724

ZZ004725

ZZ004726

ZZ004727

ZZ004728

KIT002365

FLOWFIT

DRIVE COUPLINGS FOR PETROL ENGINES AND OIL-HYDRAULIC PUMPS

They are composed of two hubs, a motor and a pump side, with an interposed rubber spider made of heat and oil-proof elastic material. They allow reliable and low noise at high speeds. They also allow to compensate small radial, axial and angular misalignments. HC series is made in aluminium.

TECHNICAL DATA				
TYPE GN	MAX COUPLE Nm	MISALIGNMENT MAX		
		RADIAL mm	AXIAL mm	ANGULAR
100	11,5	0,4	1	1°30′
300	11,5	0,8	1,3	1°30′
500	310	1	1,8	1°30′
Working temperature -20 + 80 ° C				

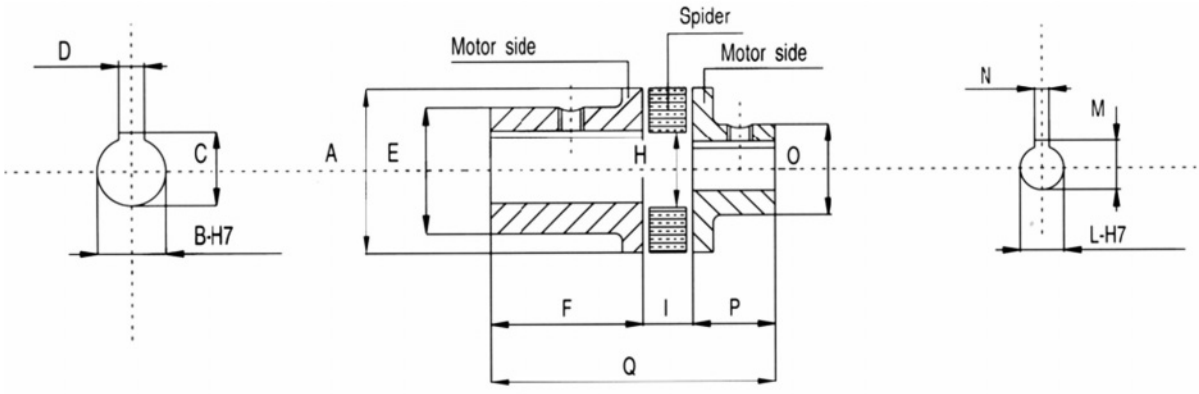

ELASTIC COUPLING																
TYPE GN	MOTOR HALF						SPIDER				PUMP HALF					
	TYPE	A	L min	L max	E	F max	TYPE	A	H	I	TYPE	A	L min	L max	O	P max
100	HC1***-050	42	16	20	36	50	ER100	42	22	15	HC1***- A020	42	8	16	28	20
											HC1***-B030	42	8	16	28	30
300	HC3***-048	65	18	24	46	48	ER300	65	30	20	HC3***- A022	65	12	20	36	22
											HC3***-B035	65	12	28	46	35
											HC3***- C045	65	22	28	46	45
500	HC5***-080	95	22	40	70	80	ER500	95	46	26	HC5***- A025	95	12	22	50	25
											HC5***-B035	95	12	28	56	35
											HC5***- C048	95	22	40	70	48

BHE - BELL-HOUSINGS FOR PETROL ENGINES

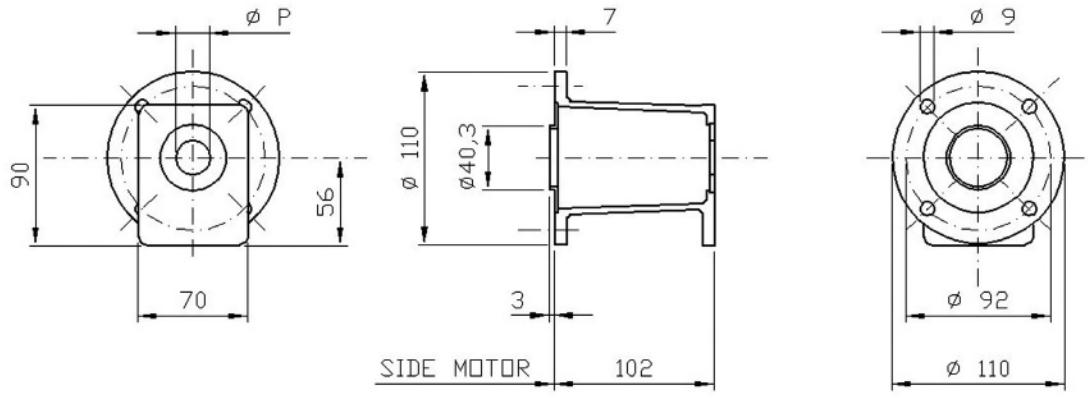

BELL-HOUSING			PUMP FACE MACH INING						HEIGHT		ELASTIC COUPLING			
CODE	PUMP SIDE ADAPTOR RING	PUMP CODE	PUMP HOLE TYPE	NO HOLES	L	M	N	O	P	T	MOTOR HALF	SPIDER	PUMP HALF	MAX TORQUE Nm
BHE111 C/01	AR 1/01	05M	RECTANGULAR FOR GEAR PUMPS	2	-	66	25,6	M6	22	102	HC1***-050	ER100	HC105A	11,5
BHE111 C/01	AR 1/01	05T		2	-	66	25,6	M6	22	102			HC105B	
BHE111 C/02	AR 1/02	1PM		4	52,4	72	26,2	M6	25,4	102			HC101A	
BHE111 C/03	AR 1/03	1MM		4	56	73	24,5	M6	30	102			HC101B	
BHE111/16	-	1ZB		2	40	40	10,3	M8	32	102			HC101D	

*** Machining code see tab 02.2 pag 20

BHE 112

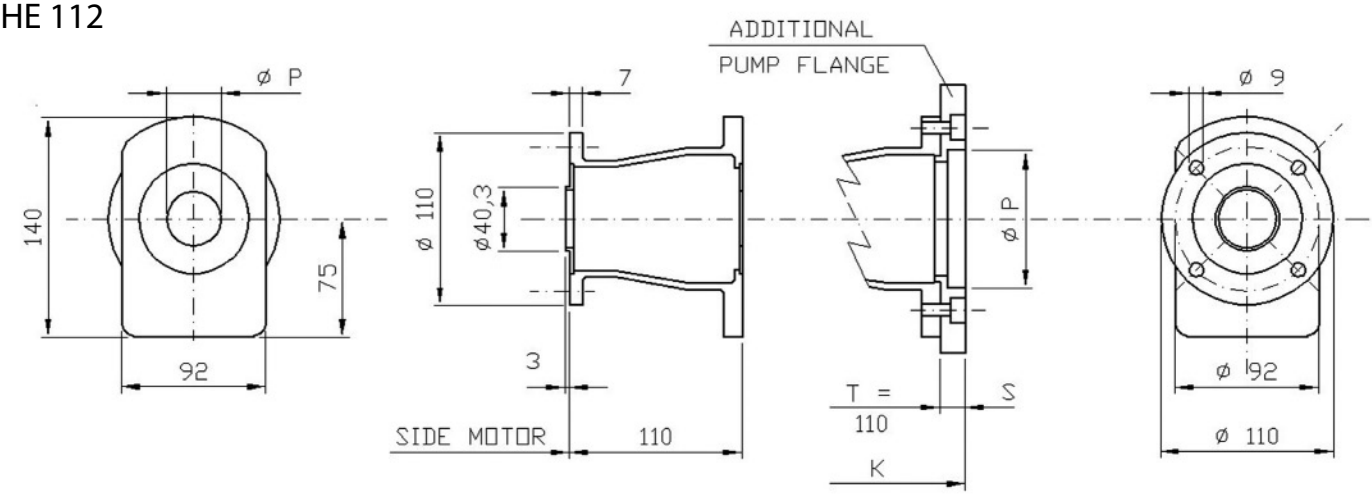

BELL-HOUSING			PUMP	PUMP FACE MACH INING							HEIGHT			ELASTIC COUPLING			
CODE ADDITIONAL PUMP FLANGE	PUMP SIDE ADAPTOR RING		CODE	PUMP FACE MACH INING	N. HOLES	L	M	N	O	P	S	T	K	MOTOR HALF	SPIDER	PUMP HALF	MAX TORQUE Nm
BHE112 C/04	-	AR 3/04	02M-02C	RECTANGULAR FOR GEAR PUMPS	4	71,5	96	32,5	M8	36,5	-	110	-	HC3***-048	ER300	HC302A-B	115
BHE112/17	-	-	2ZF		4	72	100	34,5	M8	80	-	110	-	HC3***-048	ER300	HC302D	115
BHE112/17	FR10C/05	AR 3/06	03M		4	98,5	128	43	M8	50,8	16	110	126			HC303A	
BHE112/17	FR10C/06	AR 3/06	03C		4	98,5	128	42	M10	50,8	16	110	126			HC3***-***	
BHE112/17	FR10C/07	AR 3/06	03T		4	98,5	137	45	M10	50,8	16	110	126				
BHE112/080 A	-	-	080A	FOR SAE/ISO STANDARDS	2	100	-	-	M10	80	-	110	-				
BHE112/080B	-	-	080B		2	110	-	-	M10	80	-	110	-	HC3***-048	ER300	HC3***-***	115
BHE112/080E	-	-	080E		4	100	-	-	M8	80	-	110	-				
BHE112/082 A	-	-	082A		2	106,4	-	-	M10	82,55	-	110	-				

BHE - BELL-HOUSINGS FOR PETROL ENGINES

BHE 152

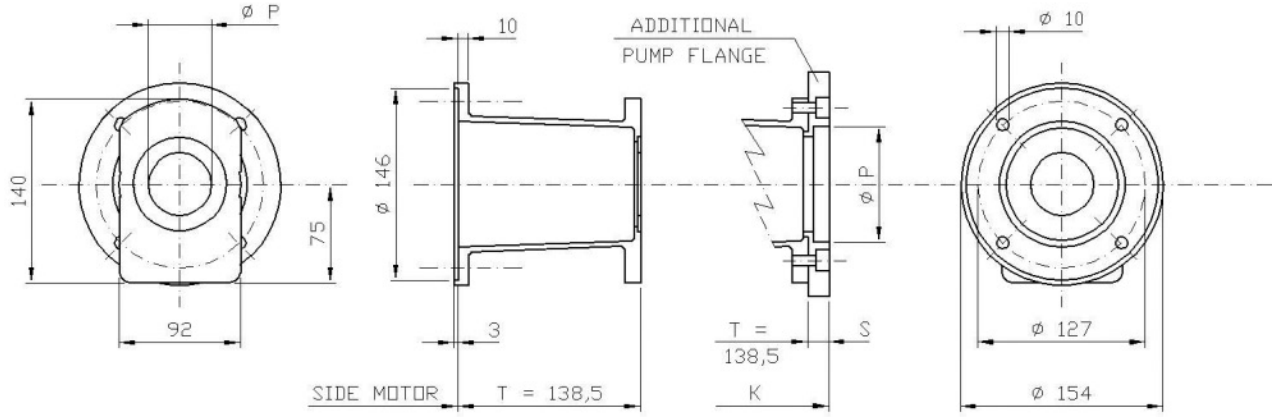

BELL-HOUSING			PUMP CODE	PUMP FACE MACHINING							HEIGHT			ELASTIC COUPLING			
CODE	ADDITIONAL PUMP FLANGE	ADAPTOR		PUMP HOLE TYPE	N. HOLES	L	M	N	O	P	S	T	K	MOTOR HALF	SPIDER	PUMP HALF	MAX TORQUE Nm
BHE152 C/02	-	AR 3/02	1PM	RECTANGULAR FOR GEAR PUMPS	4	52,4	72	26,2	M6	25,4	-	138,5	-	HC3***-048	ER300	HC301 A	115
BHE152 C/03	-	AR 3/03	1MM		4	56	73	24,5	M6	30	-	138,5	-			HC301B	
BHE152/16	-	-	1ZB		2	40	40	10,3	M8	32	-	138,5	-			HC301D	
BHE152 C/04	-	AR 3/04	02M-02C		4	71,5	96	32,5	M8	36,5	-	138,5	-	HC3***-048	ER300	HC302 A-B	115
BHE152/17	-	-	2ZF		4	72	100	34,5	M8	80	-	138,5	-			HC302D	
BHE152/17	FR10C/05	AR 3/06	03M		4	98,5	128	43	M8	50,8	16	138,5	154,5			HC303 A	
BHE152/17	FR10C/06	AR 3/06	03C		4	98,5	128	42	M10	50,8	16	138,5	154,5				
BHE152/17	FR10C/07	AR 3/06	03T		4	98,5	137	45	M10	50,8	16	138,5	154,5				
BHE152/080 A	-	-	080 A	OVAL AND SQUARE FOR SAE AND ISO STANDARD	2	100	-	-	M10	80	-	138,5	-	HC3***-048	ER300	HC3***-***	115
BHE152/080B	-	-	080B		2	110	-	-	M10	80	-	138,5	-				
BHE152/080E	-	-	080E		4	100	-	-	M8	80	-	138,5	-				
BHE152/082 A	-	-	082 A		2	106,4	-	-	M10	82,55	-	138,5	-				
BHE152/080U	FR60/100B	-	100B		2	140	-	-	M12	100	29	138,5	167,5				
BHE152/080U	FR60/100G	-	110G		4	125	-	-	M10	100	29	138,5	167,5				
BHE152/080U	FR60/101B	-	101B		2	146	-	-	M12	101,6	29	138,5	167,5				
BHE152/080U	FR60/101D	-	101D		4	127	-	-	M12	101,6	29	138,5	167,5				

BHE 172

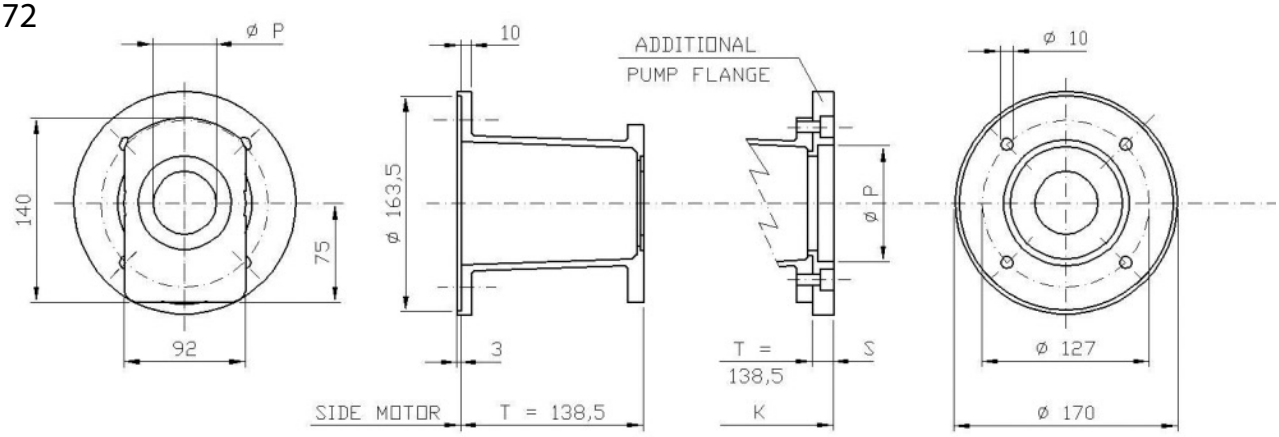

BELL-HOUSING			PUMP CODE	PUMP FACE MACH INING							HEIGHT			ELASTIC COUPLING			
CODE	ADDITIONAL PUMP FLANGE	PUMP SIDE ADAPTOR RING		PUMP HOLE TYPE	N°	L	M	N	O	P	S	T	K	MOTOR	SPIDER	PUMP	MAX
BHE172 C/02	-	AR 3/02	1PM	RECTANGULAR FOR GEAR PUMP	4	52,4	72	26,2	M6	25,4	-	138,5	-		ER300	HC301 A	115
BHE172 C/03	-	AR 3/03	1MM		4	56	73	24,5	M6	30	-	138,5	-	HC3***-048		HC301B	
BHE172/16	-	-	1ZB		2	40	40	10,3	M8	32	-	138,5	-			HC301D	
BHE172 C/04	-	AR 3/04	02M-02C		4	71,5	96	32,5	M8	36,5	-	138,5	-	HC3***-048	ER300	HC302 A-B	115
BHE172/17	-	-	2ZF		4	72	100	34,5	M8	80	-	138,5	-			HC302D	
BHE172/17	FR10C/05	AR 3/06	03M		4	98,5	128	43	M8	50,8	16	138,5	154,5			HC303 A	
BHE172/17	FR10C/06	AR 3/06	03C		4	98,5	128	42	M10	50,8	16	138,5	154,5				
BHE172/17	FR10C/07	AR 3/06	03T		4	98,5	137	45	M10	50,8	16	138,5	154,5				
BHE172/080 A	-	-	080 A	OVAL AND SQUARE FOR SAE AND ISO STANDARD	2	100	-	-	M10	80	-	138,5	-	HC3***-048	ER300	HC3***-***	115
BHE172/080B	-	-	080B		2	110	-	-	M10	80	-	138,5	-				
BHE172/080E	-	-	080E		4	100	-	-	M8	80	-	138,5	-				
BHE172/082 A	-	-	082 A		2	106,4	-	-	M10	82,55	-	138,5	-				
BHE172/080U	FR60/100B	-	100B		2	140	-	-	M12	100	29	138,5	167,5				
BHE172/080U	FR60/100G	-	110G		4	125	-	-	M10	100	29	138,5	167,5				
BHE172/080U	FR60/101B	-	101B		2	146	-	-	M12	101,6	29	138,5	167,5				
BHE172/080U	FR60/101D	-	101D		4	127	-	-	M12	101,6	29	138,5	167,5				

FLOWFIT PETROL ENGINES BELL HOUSINGS ONLY

Flowfit offer a full range of bell housings and drive couplings to suit Honda and Loncin engines from stock, we offer a selection of bell housings and drive couplings to be fitted with all major brands on the market, if you aren't sure please contact the Flowfit sales team for full information.

Brands covered include Honda, Loncin, Lister Petter, LaUntop, Kohler, Villiers, Briggs and Stratton and many more.

BELL HOUSINGS

PART NUMBER	DESCRIPTION	LIST PRICE
BHE111C02AR102	BELL HOUSING GROUP 1 PUMP TO HONDA PETROL ENGINE GX120, GX160, GX200, LONCIN ENGINE G120, G160, G200	£84.42
BHE152C02AR302	BELL HOUSING GROUP 1 PUMP TO HONDA PETROL ENGINE GX240, GX270, GX340, GX390, LONCIN ENGINE G240, G270, G340, G390	£123.94
BHE152C04AR304	BELL HOUSING GROUP 2 PUMP TO HONDA PETROL ENGINE GX240, GX270, GX340, GX390 LONCIN ENGINE G240, G270, G340, G390	£87.22
BHE112C/04	PETROL ENGINE BELL HOUSING GROUP 2 PUMP TO HONDA ENGINE GX120, GX160, GX200 LONCIN ENGINE G120, G160, G200	£81.45
BHE112/045A	PETROL ENGINE BELL HOUSING HI-LO PUMP TO HONDA ENGINE GX120, GX160, GX200, LONCIN ENGINE G120, G160, G200	£82.17
BHE152/045A	PETROL ENGINE BELL HOUSING HI-LO PUMP TO HONDA ENGINE GX240, GX270, GX340, GX390 LONCIN ENGINE G240, G270, G340, G390	£84.80

SEE TECHNICAL DRAWINGS FOR BELL HOUSING DIMENSIONS

PETROL ENGINES DRIVE COUPLINGS ONLY

FLOWFIT

DRIVE COUPLINGS		
PART NUMBER	**DESCRIPTION**	**LIST PRICE**
HC119MC050E100HC101A	DRIVE COUPLING GRP 1 PUMP TO HONDA PETROL ENGINES GX120, GX160, GX200 3/4" AND LONCIN G120, G160, G200 3/4"	£20.18
HC325NC048ER300HC301A	DRIVE COUPLING GRP 1 PUMP TO HONDA PETROL ENGINE GX240, GX270, GX340, GX390 1" AND LONCIN G240, G270, G340, G390 1"	£35.96
HC325NC048ER300HC302AB	DRIVE COUPLING GRP 2 PUMP TO HONDA GX240, GX270, GX340, GX390 1" AND LONCIN G240, G270, G340, G390 1"	£32.78
HC319MC048ER300HC302AB	PETROL ENGINE DRIVE COUPLING GRP 2 PUMP TO HONDA GX120 GX160 GX200 3/4" AND LONCIN G120, G160, G200 3/4"	£35.87
HC219MC048ER200HC212HB03	PETROL ENGINE DRIVE COUPLING HI-LO PUMP TO HONDA GX120, GX160, GX200 3/4" ANDLONCIN G120, G160, G200 3/4"	£50.16
HC325NC048ER300HC312	PETROL ENGINE DRIVE COUPLING HI-LO PUMP TO HONDA GX240, GX270, GX340, GX390, 1" Q SHAFT AND LONCIN G240, G270, G340, G390 1" Q SHAFT	£42.48
	SEE TECHNICAL DRAWINGS FOR BELL HOUSING DIMENSIONS	

FLOWFIT BELL HOUSINGS AND DRIVE COUPLING ENGINE KITS

LISTED IN/BY ENGINE TYPE

PART NUMBER	DESCRIPTION	LIST PRICE
ZZ004727	**BELL HOUSING AND DRIVE COUPLING ENGINE KIT.** TO SUIT GROUP 1 PUMP SUITS HONDA GX120, GX160 AND GX200 SUITS LONCIN G120, G160 AND G200 KIT COMPRISING:- BHE111C02 BELL HOUSING, HC119MC050 ENGINE HALF, ER100 SPIDER AND HC101A PUMP HALF	£105.32
ZZ004724	**BELL HOUSING AND DRIVE COUPLING ENGINE KIT.** TO SUIT GROUP 1 PUMP SUITS HONDA GX240, GX270, GX340 AND GX390 SUITS LONCIN G240, G270, G340 AND G390 KIT COMPRISING:- BHE152C02 BELL HOUSING, HC325NC048 ENGINE HALF, ER300 SPIDER, HC301A PUMP HALF AND AR3/02 ADAPTOR RING	£159.89
ZZ004729	**BELL HOUSING AND DRIVE COUPLING ENGINE KIT** TO SUIT GROUP 2 PUMP. SUITS HONDA GX120, GX160 AND GX200 SUITS LONCIN G120, G160 AND G200 KIT COMPRISING BHE 112C/04 BELL HOUSING, HC319MC048 ENGINE HALF, ER300 SPIDER, HC302AB PUMP HALF AND AR3/02 ADAPTOR RING.	£115.58
ZZ004725	**BELL HOUSING AND DRIVE COUPLING ENGINE KIT** TO SUIT GROUP 2 PUMP. SUITS HONDA GX240, GX270, GX340 AND GX390 SUITS LONCIN G240, G270, G340 AND G390 KIT COMPRISING :- BHE152C04 BELL HOUSING, HC325NC048 ENGINE HALF, ER300 SPIDER, HC302AB PUMP HALF AND AR3/04 ADAPTOR RING	£119.14
ZZ004728	**BELL HOUSING AND DRIVE COUPLING ENGINE KIT TO SUIT HI-LO PUMP** SUITS HONDA GX120, GX160 AND GX200 SUITS LONCIN G120, G160 AND G200 KIT COMPRISING BHE112/045A BELL HOUSING, HC219MC048 ENGINE HALF, HC212HB035 PUMP HALF AND ER200 SPIDER.	£133.18
ZZ004726	**BELL HOUSING AND DRIVE COUPLING ENGINE KIT TO SUIT HI-LO PUMP** SUITS HONDA GX240, GX270, GX340 AND GX390 SUITS LONCIN G240, G270, G340 AND G390 KIT COMPRISING BHE152/045A BELL HOUSING, HC325NC048 ENGINE HALF, HC312HB035 PUMP HALF AND ER300 SPIDER	£127.28

ZZ004724

ZZ004725

ZZ004726

ZZ004727

ZZ004728

ZZ004729

STANDARD GROUP 1 KIT SUITS HATZ 1B20

FITS THIS PUMP:

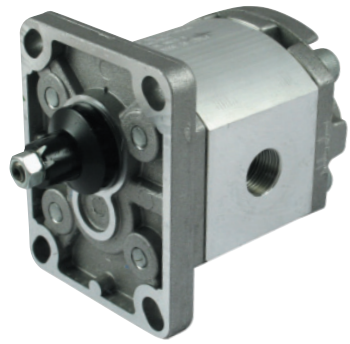

(PUMP NOT INCLUDED IN KIT)

	DIESEL ENGINE BELL HOUSING AND DRIVE COUPLING KIT. FITS GROUP 1 PUMP AND THE FOLLOWING ENGINE TYPES	
PART NO.		LIST PRICE
ZZ002363	1B20 4.2HP	£182.34

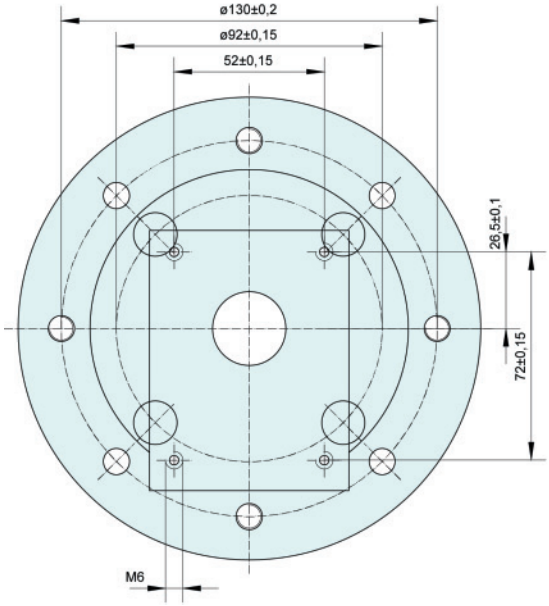

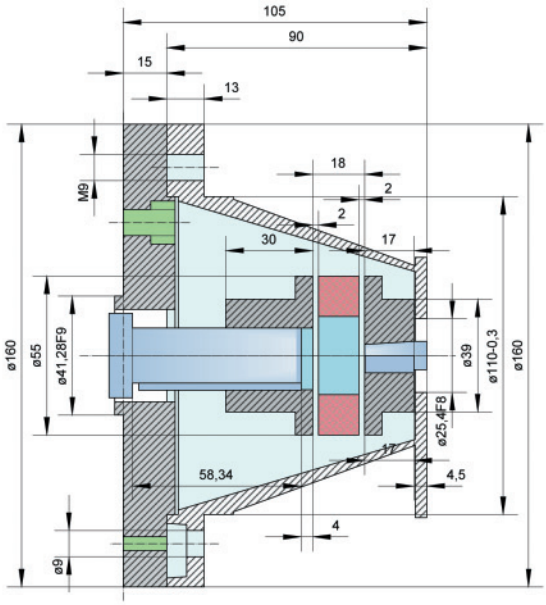

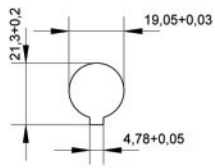

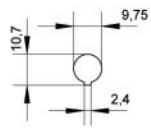

STANDARD GROUP 2 KIT SUITS HATZ 1B20

FITS THIS PUMP:

(PUMP NOT INCLUDED IN KIT)

	DIESEL ENGINE BELL HOUSING AND DRIVE COUPLING KIT. FITS GROUP 2 PUMP AND THE FOLLOWING ENGINE TYPES	
PART NO.		LIST PRICE
ZZ002364	1B20 4.2HP	£246.13

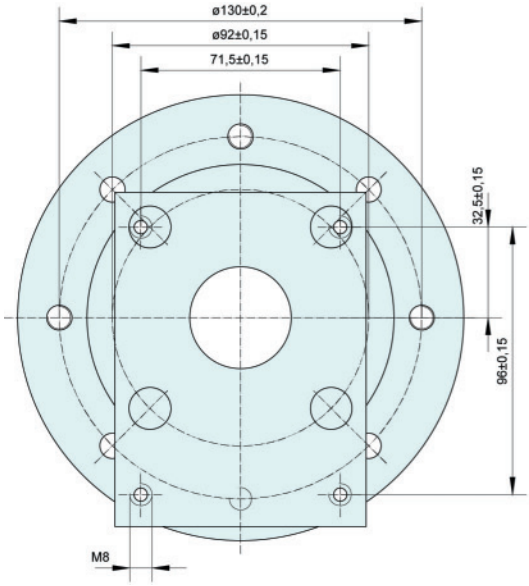

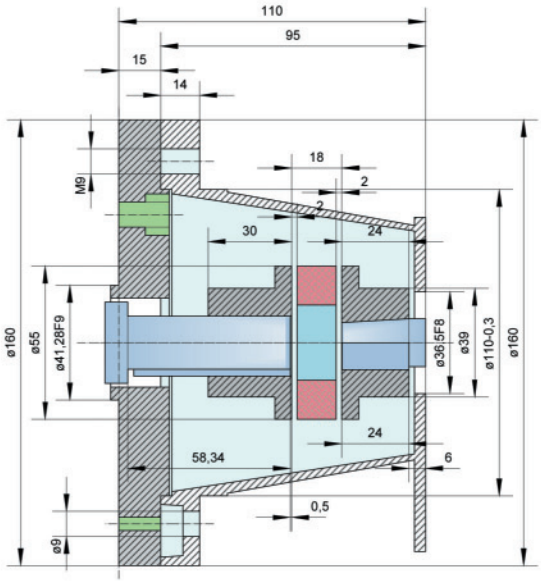

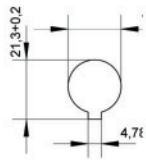

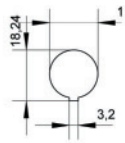

STANDARD GROUP 1 KIT SUITS HATZ 1B40

FITS THIS PUMP:

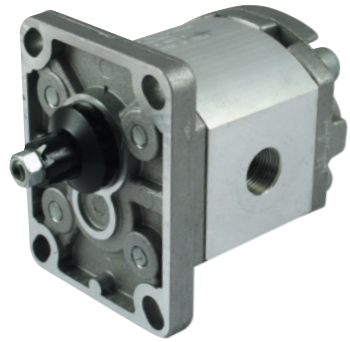

(PUMP NOT INCLUDED IN KIT)

	DIESEL ENGINE BELL HOUSING AND DRIVE COUPLING KIT. FITS GROUP 1 PUMP AND THE FOLLOWING ENGINE TYPES	
PART NO.		LIST PRICE
ZZ002365	1B40 9.2HP	£293.80

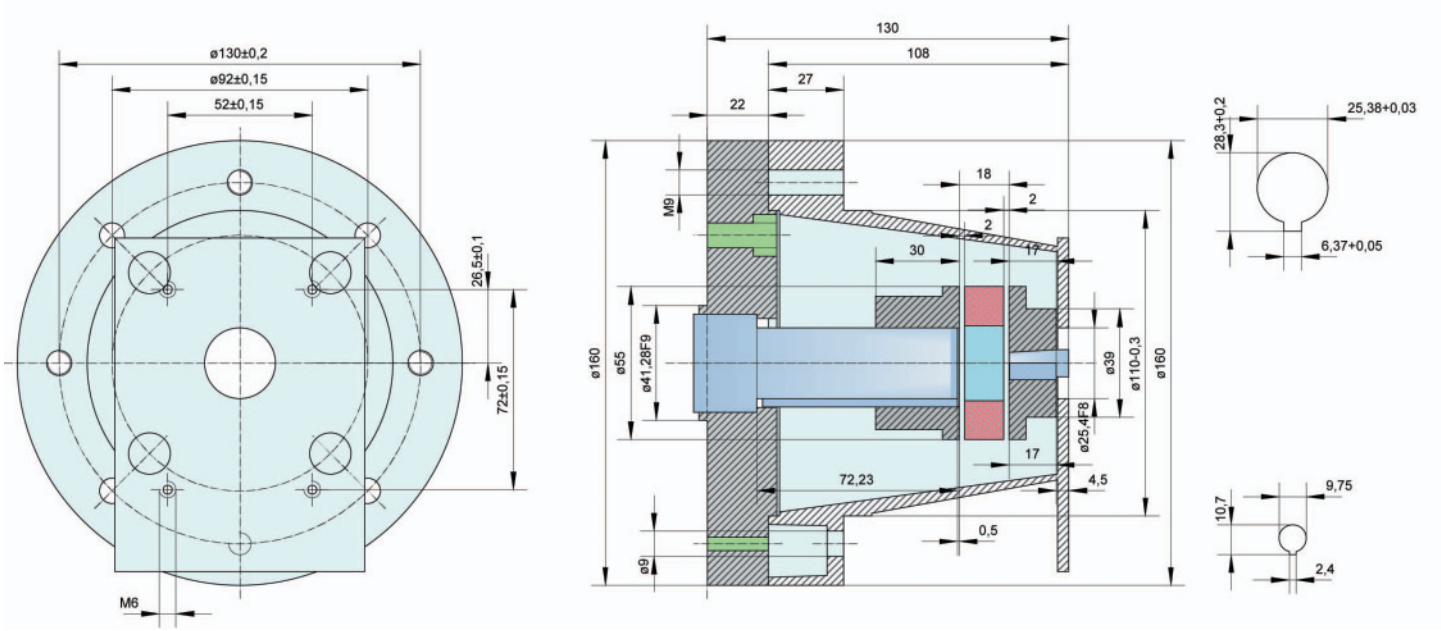

STANDARD GROUP 2 KIT SUITS HATZ 1B40

FITS THIS PUMP:

(PUMP NOT INCLUDED IN KIT)

	DIESEL ENGINE BELL HOUSING AND DRIVE COUPLING KIT. FITS GROUP 2 PUMP AND THE FOLLOWING ENGINE TYPES	
PART NO.		LIST PRICE
ZZ002366	1B40 9.2HP	£336.43

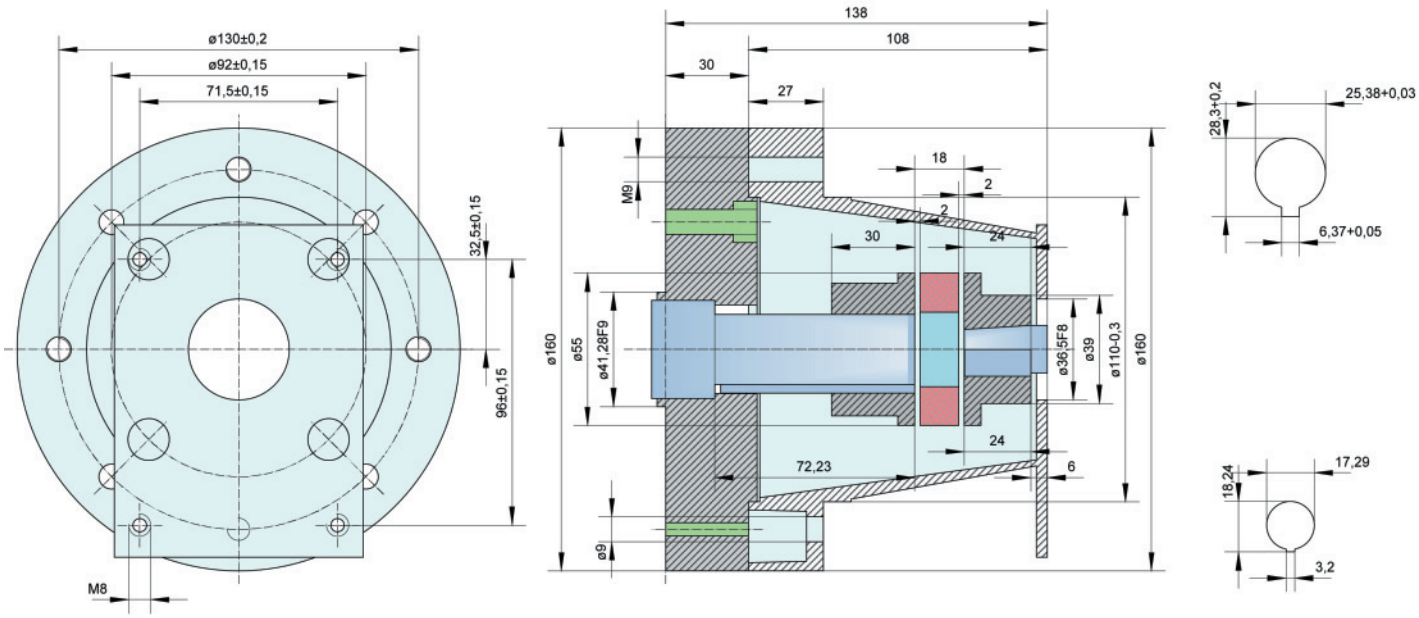

MECHANICAL CLUTCHES

SERIES 30100 MECHANICAL CLUTCH GROUP 1 AND GROUP 2 • 30KW.....442
SERIES 30300 MECHANICAL CLUTCH GROUP 2 AND GROUP 3 • 40KW.....443
SERIES 30500 MECHANICAL CLUTCH GROUP 3.5 AND GROUP 4 • 60KW.....444
FLANGES TO SUIT 30500 SERIES GROUP 3.5 AND GROUP 4 445

The Mechanical Clutches are reversible, plus anti-clockwise & clockwise are available upon request. When coupled with our range of gear pumps we recommend to engage and disengage the pump when the directional valve is in the unload position at a speed of not more than 1800 rpm.In the reversible position the max engagement and disengagement speed is 1000 r.p.m.

Lubrication
SAE 90 gear oil must be put in the mechanical clutch prior to use- please note we do not supply the gear oil and will not accept responsibility for customers not doing putting oil in.

Change the oil after the first 60-80 hours and then every 12 months or 1500 hours which ever falls first.

Maintenance
Please check the oil level via the special oil window every 50 hours. Working temperatures should not exceed 120 degrees celcius under continuos duty cycle.

Specifiy the correct Mechanical Clutch.
Please check with the Technical Sales Office if you are not sure which mechanical clutch to use.

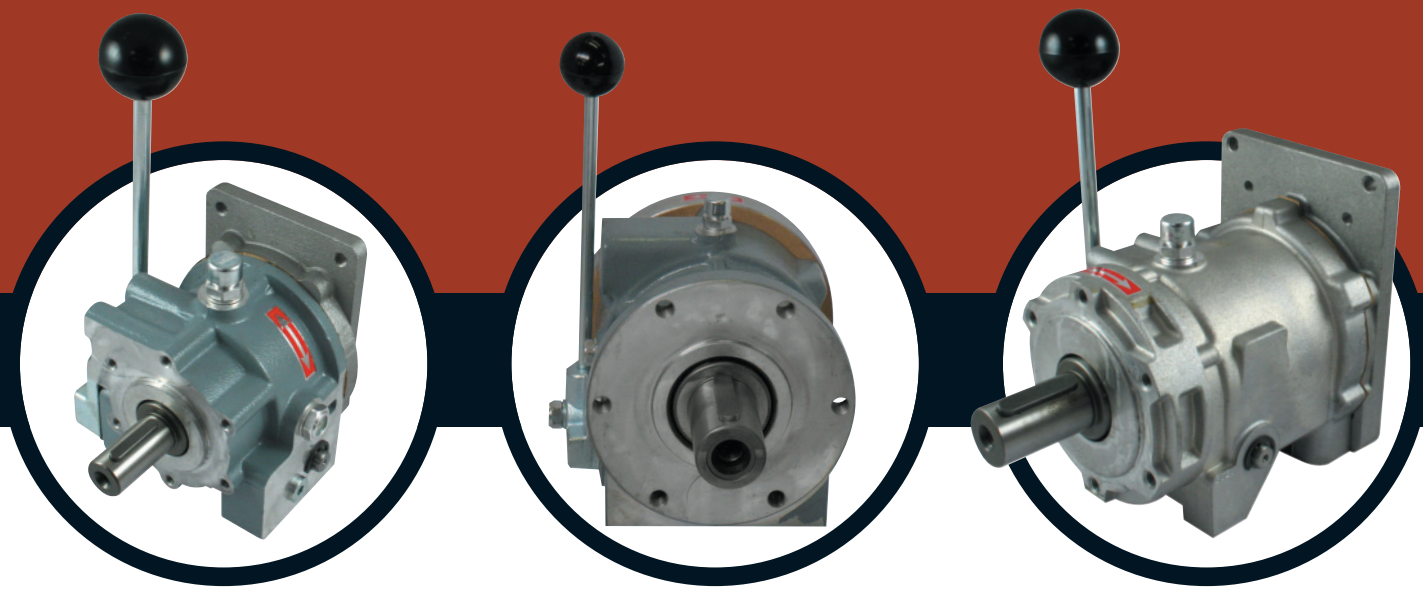

FLOWFIT

SERIES 30100 MECHANICAL CLUTCH GROUP 1 AND GROUP 2 • 30KW

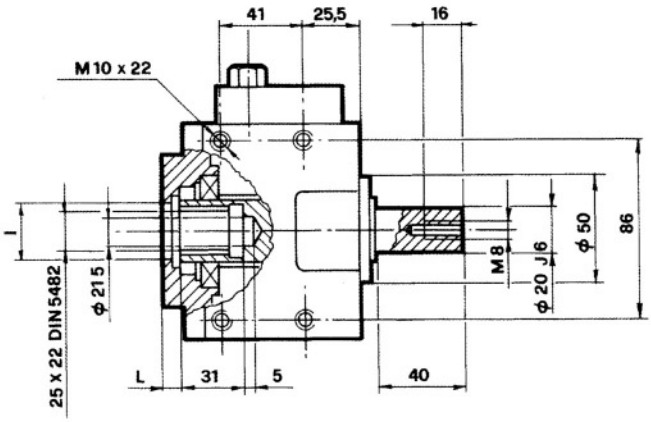

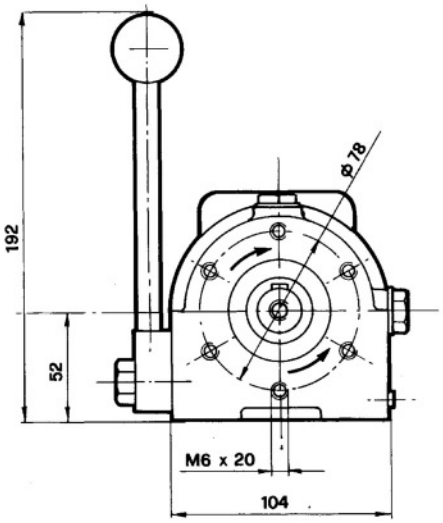

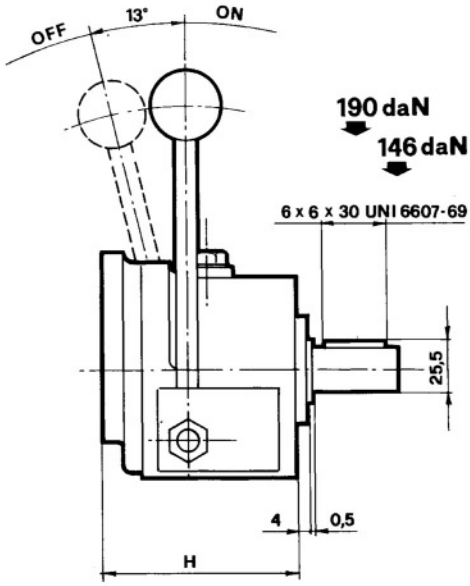

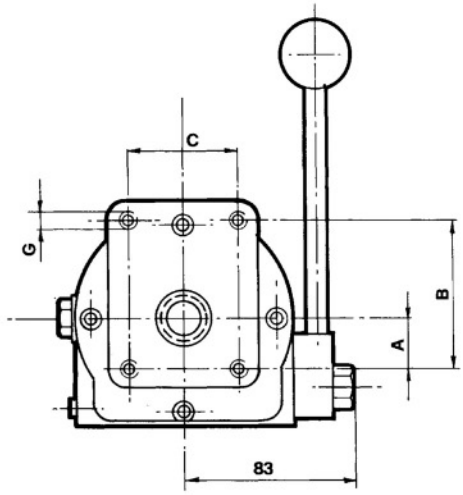

The mechanical couplings with two direction arrows are REVERSIBLE

Nominal torque	Max. speed	Max. power output	Axial load
9 daNm	**2000 RPM**	**Kw 30**	**120 daN**

PART NUMBER	DIRECTION OF ROTATION	PUMP GROUP	A	B	C	G	H	I	L
30100	**REVERSIBLE**	1	26.3	72	52.4	M6x12	92.5	25.4 H7	7
30103	**CLOCKWISE**								
30104	**ANTICLOCKWISE**	2	32.5	96	71.4	M8x15	95.5	36,5 H7	10
30100/B	**REVERSIBLE**								
30105	**CLOCKWISE**	2 BOSCH	34.5	100	72	M8x15	95.5	80 H7	10
30106	**ANTICLOCKWISE**								

PART NO.	DESCRIPTION	PRICE
25 – 30100	Mechanical Clutch Reversible gr.2/1	£328.85
25 - 30100/B	Mechanical Clutch Reversible Bosch	£361.62
25 - 30103	Mechanical Clutch Clockwise gr.2/1 Fl.1	£389.13
25 - 30104	Mechanical Clutch Antclockwise1/2	£389.13
25 – 30105	Mechanical Clutch Clockwise gr.2 Bosch	£389.13
25 – 30106	Mechanical Clutch Anticlockwise gr.2 Bosch	£389.13
If the part number needed is not listed please ask the Flowfit Sales Team		

50% OFF ALL PRICES

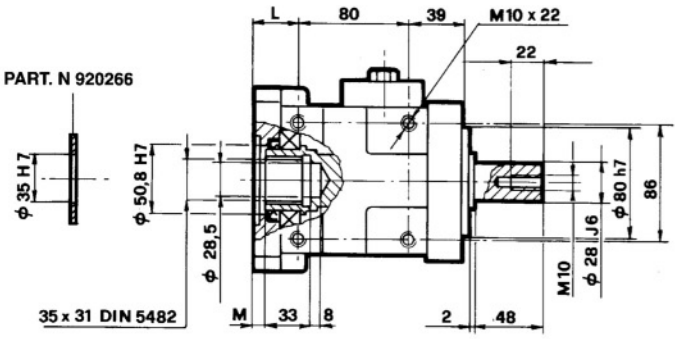

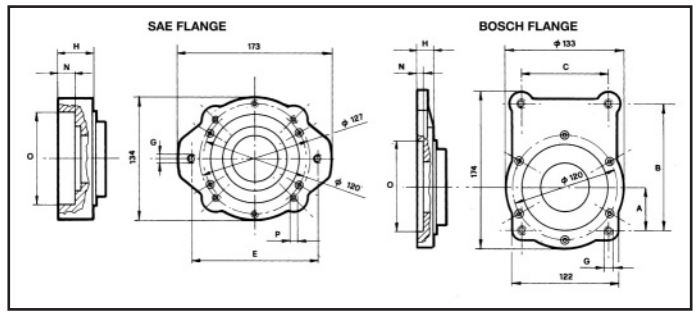

The mechanical couplings with two direction arrows are REVERSIBLE

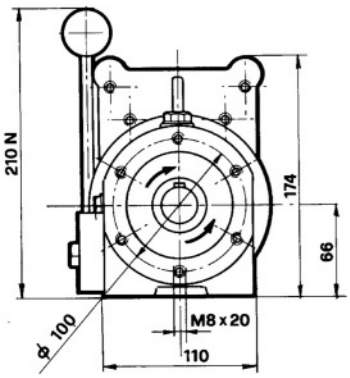

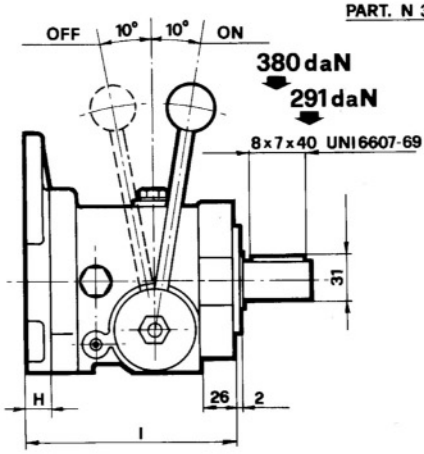

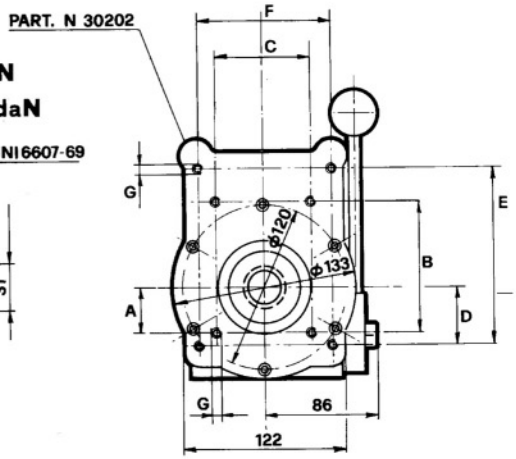

Nominal torque	Max. speed	Max. power output	Axial load
18,5 daNm	2700 RPM	Kw 40	160 daN

PART NUMBER	DIRECTION OF ROTATION	PUMP GROUP	A	B	C	D	E	F	G	H	I	L	M	N	O H7	P
30300 30301 30302	REVERSIBLE CLOCKWISE ANTICLOCKWISE	2-3 30202	32.5	96	71.4	42.5	128	98.4	M8x15	19	151	32	8.6			
30313 30307 30308	REVERSIBLE CLOCKWISE ANTICLOCKWISE	2 BOSCH 30217	34.5	100	72				M8x15	19	151	32	8.6	8.5	80	
30314 30309 30310	REVERSIBLE CLOCKWISE ANTICLOCKWISE	3 BOSCH 30228	48	145	102				M10x15	19.5	151.5	32.5	9.1	9	105	
30311 30303 30304	REVERSIBLE CLOCKWISE ANTICLOCKWISE	SAE A 30203					106.4		M10x22	34	166	47	23.6	15	82.55	
30312 30305 30306	REVERSIBLE CLOCKWISE ANTICLOCKWISE	SAE B 30221					146		M12x22	39	171	52	28.6	20	101.6	M12x22

PART NO.	DESCRIPTION	PRICE
26 – 30300	Mechanical Clutch Reversible gr.2/3 RV	£412.71
26 – 30301	Mechanical Clutch Clockwise gr.2/3	£412.71
26 - 30302	Mechanical Clutch Anticlockwise gr.2/3	£412.71
26 – 30303	Mechanical Clutch Clockwise gr.2/3 SAE A	£461.20
26 – 30304	Mechanical Clutch Anticlockwise gr.2/3 SAE A	£461.20
26 – 30305	Mechanical Clutch Clockwise gr.2/3 SAE B	£461.20
26 – 30306	Mechanical Clutch Anticlockwise gr.2/3 SAE B	£461.20
26 – 30307	Mechanical Clutch Clockwise gr.2/3 Fl.2 Bosch	£461.20
26 – 30308	Mechanical Clutch Anticlockwise gr.2/3 Fl.2 Bosch	£461.20
26 - 30309	Mechanical Clutch Clockwise gr.2/3 Fl.3 Bosch	£461.20
26 - 30310	Mechanical Clutch Anticlockwise left gr.2/3 Fl.3 Bosch	£461.20
26 – 30311	Mechanical Clutch Reversible gr.2/3 RV SAE A	£461.20
26 - 30312	Mechanical Clutch Reversible gr.2/3 RV SAE B	£461.20
26 – 30313	Mechanical Clutch Reversible gr.2/3 RV Fl.2 Bosch	£461.20
26 – 30314	Mechanical Clutch Reversible gr.2/3 RV Fl.3 Bosch	£461.20
If the part number needed is not listed please ask the Flowfit Sales Team		

SERIES 30500 MECHANICAL CLUTCH GROUP 3.5 AND GROUP 4 • 60KW

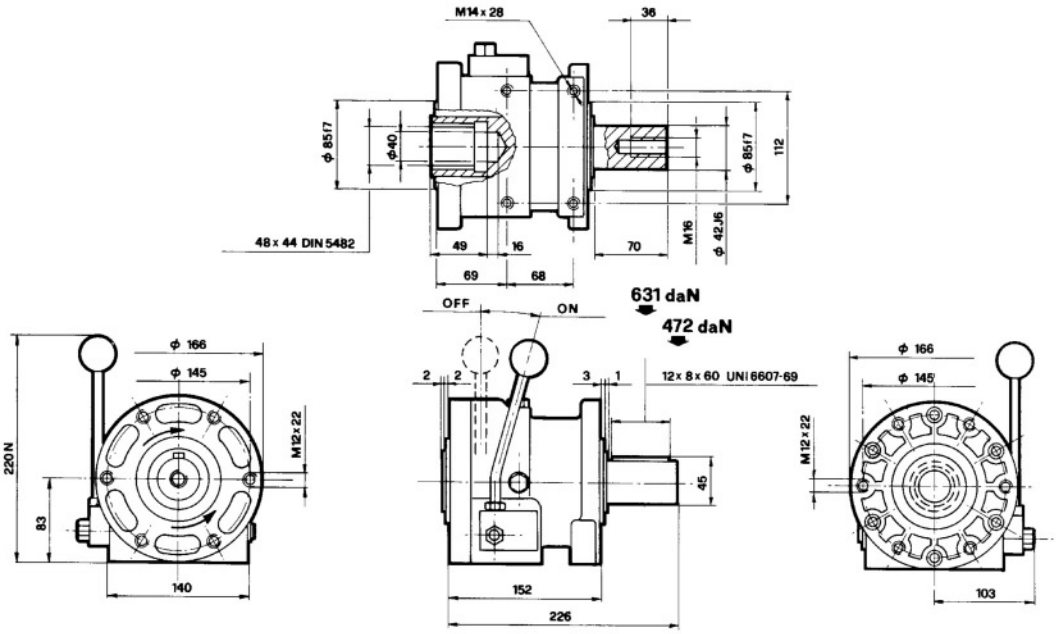

The mechanical couplings with two direction arrows are REVERSIBLE

Nominal torque	Max. speed	Max. power output	Axial load
58 daNm	**2700 RPM**	**Kw 60**	**260 daNm**

PART NUMBER	DIRECTION OF ROTATION
30500	**REVERSIBLE ROTATION**
30501	**CLOCKWISE ROTATION**
30502	**ANTICLOCKWISE ROTATION**

PART NUMBER	PUMP FLANGE TYPE	A	B	C	D	EH 7	FG		H	I	L	M	N
30400	Gr.2							17	21				
30401	Gr.3							21	23				
30402	Gr. 3.5	49.3	149.5	114.3	M10x20	60.3		11.5	24				
30403	Gr. 4	64.5	188	143	M12x22	63.5		16	23				
30417	Gr. 3 BOSCH	48	145	102	M10x15	105		12	19				
30420	SAE A					82.55	M12x20	21	25	106		M12x25	
30422	SAE B					101.6	M12x20	12	25	146		M12x25	127
30432	SAE C					127	M14x25	16	28	181		M16x25	162
30461	L.G. 20-35				M10x16	100		25	34		160		
30462	L.G. 50				M10x25	100		32.5	41		160		
30463	L.G. 75				M12x25	105		33	41		180		
30471	ULTRA 3PL DOWTY	52.5	53.4	105.1	M10x20	101.6		10.5	24.5				

PART NO.	DESCRIPTION	PRICE
27 – 30500	Mechanical Clutch Reversible gr.3,5 without Flange	£890.95
27 - 30501	Mechanical Clutch Clockwise gr.3,5 without Flange	£890.95
27 – 30502	Mechanical Clutch Anticlockwise gr.3,5 without Flange	£890.95
If the part number needed is not listed please ask the Flowfit Sales Team		

50% OFF ALL PRICES

FLANGES TO SUIT 30500 SERIES GROUP 3.5 AND GROUP 4

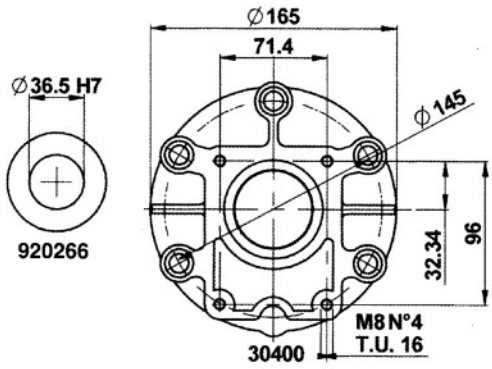

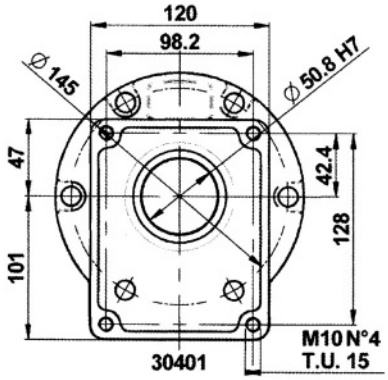

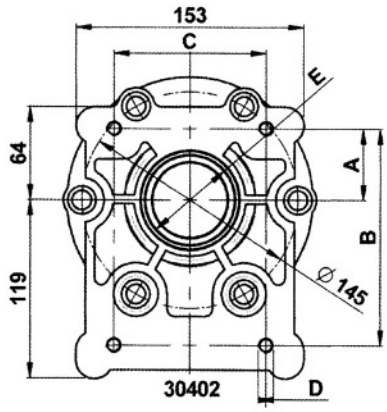

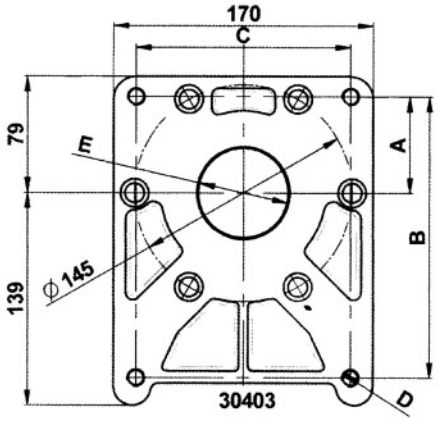

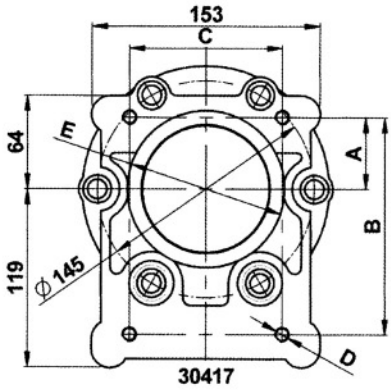

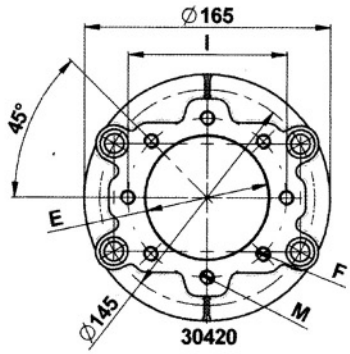

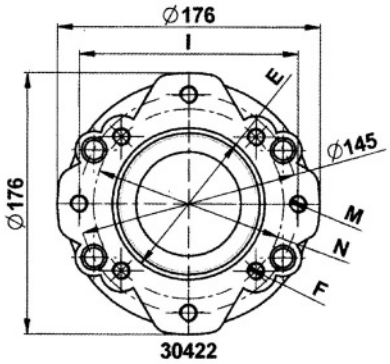

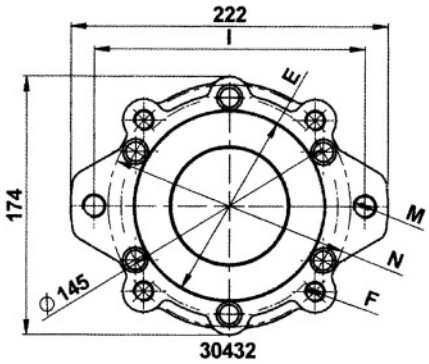

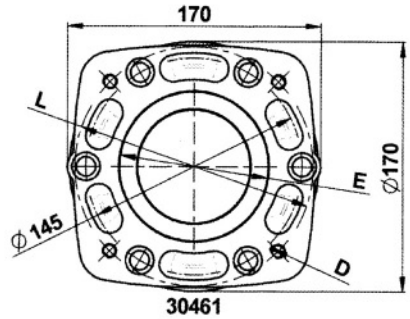

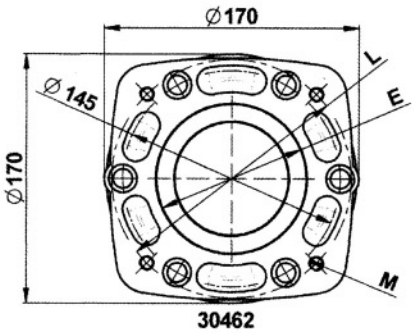

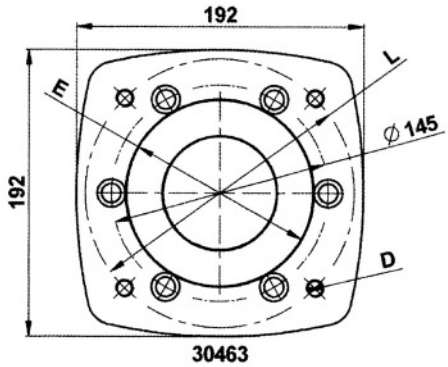

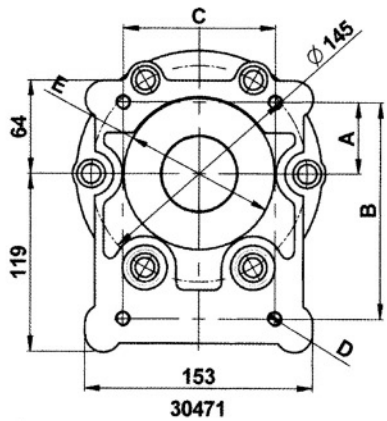

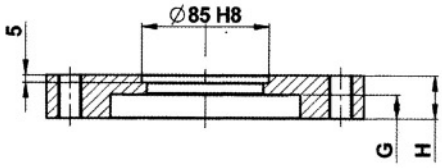

PART NO.	DESCRIPTION	PRICE
28 - 30400	Flange gr.2+socket capscrews	£103.50
28 – 30401	Flange gr.3+socket capscrews	£96.96
28 – 30402	Flange gr.3,5+socket capscrews	£93.02
28 – 30403	Flange gr.4+socket capscrews	£93.02
28 – 30417	Flange gr.3 Bosch+socket capscrews	£117.91
28 – 30420	Flange SAE A 2 holes+socket capscrews	£93.02
28 – 30421	Flange SAE B 2 holes+socket capscrews	£117.91
28 - 30422	Flange SAE B 4 holes+socket capscrews	£116.72
28 – 30431	Flange SAE C 2 holes+socket capscrews	£117.91
28 - 30432	Flange SAE C 4 holes+socket capscrews	£117.91
28 – 30461	Flange L.G. 20-35+socket capscrews	£117.91
28 – 30462	Flange L.G. 50+socket capscrews	£117.91
28 - 30463	Flange L.G. 75+socket capscrews	£117.91

REVERSIBLE HYDRAULIC MECHANICAL CLUTCH AND PUMP ASSEMBLIES

GROUP 1
REVERSIBLE HYDRAULIC MECHANICAL CLUTCH AND PUMP ASSEMBLY 9 L/MIN 447
REVERSIBLE HYDRAULIC MECHANICAL CLUTCH AND PUMP ASSEMBLY 11.34 L/MIN 447
REVERSIBLE HYDRAULIC MECHANICAL CLUTCH AND PUMP ASSEMBLY 14.04 L/MIN 448
REVERSIBLE HYDRAULIC MECHANICAL CLUTCH AND PUMP ASSEMBLY 17.64 L/MIN 448
REVERSIBLE HYDRAULIC MECHANICAL CLUTCH AND PUMP ASSEMBLY 19.8 L/MIN 448
REVERSIBLE HYDRAULIC MECHANICAL CLUTCH AND PUMP ASSEMBLY 25.2 L/MIN 448
GROUP 2
REVERSIBLE HYDRAULIC MECHANICAL CLUTCH AND PUMP ASSEMBLY 28.8 L/MIN 449
REVERSIBLE HYDRAULIC MECHANICAL CLUTCH AND PUMP ASSEMBLY 34.2 L/MIN 449
REVERSIBLE HYDRAULIC MECHANICAL CLUTCH AND PUMP ASSEMBLY 36.9 L/MIN 449
REVERSIBLE HYDRAULIC MECHANICAL CLUTCH AND PUMP ASSEMBLY 46.8 L/MIN 449
GROUP 3
REVERSIBLE HYDRAULIC MECHANICAL CLUTCH AND PUMP ASSEMBLY 52.2 L/MIN 450
REVERSIBLE HYDRAULIC MECHANICAL CLUTCH AND PUMP ASSEMBLY 59.4 L/MIN 450
REVERSIBLE HYDRAULIC MECHANICAL CLUTCH AND PUMP ASSEMBLY 64.8 L/MIN 450
REVERSIBLE HYDRAULIC MECHANICAL CLUTCH AND PUMP ASSEMBLY 79.2 L/MIN 450

FLOWFIT

REVERSIBLE HYDRAULIC MECHANICAL CLUTCH AND PUMP ASSEMBLIES

The mechanical clutches are uni-directional and bi-directional. When coupled with our range of gear pumps we recommend to engage and disengage the pump when the directional valve is in the unload position at a speed of no more than 1800 rpm. In the reversible position the max engagement and disengagement speed is 1000 rpm.

LUBRICATION

SEA 90 gear oil must be put in the mechanical clutch prior to use - please note we do not supply the gear oil and will not accept responsibility for customers not putting oil into the clutch unit. Change the oil after the first 60-80 hours and then every 12 months or 1500 hours which ever falls first.

MAINTENANCE

Please check the oil level via the special oil window every 50 hours. Working temperatures should not exceed 120 degrees celcius under continuos duty cycle.

SPECIFY THE CORRECT MECHANICAL CLUTCH

Please check if you are unsure how to apply and use this product. Speed, flow and pressure have a big bearing on selecting the correct combination. If unsure please ask our technical department for assistance.
Please check with the Technical Sales Office if you are not sure which mechanical clutch to use.

Clockwise rotation - Max 5000rpm
Nominal torque and voltages shown in part number description.

GROUP 1

REVERSIBLE HYDRAULIC MECHANICAL CLUTCH AND PUMP ASSEMBLY 9 L/MIN

Nominal torque: 1.86 daNm
Max Power: 3.5kW
Operating temperature: +80°C -20°C
Axial load: 120 daN

Bi-directional
This will produce 9 L/min at 200 bar at 1800rpm with a 5cc group 1 pump

PART NO.	FLOW @ 1800RPM L/MIN	WORKING PRESSURE BAR	POWER KW	NOMINAL TORQUE **daNm**	GRP 1 PUMP CC/REV	PRICE
ZZ000464	9	200	3.5	1.86	5	£509.85

REVERSIBLE HYDRAULIC MECHANICAL CLUTCH AND PUMP ASSEMBLY 11.34 L/MIN

Nominal torque: 2.33 daNm
Max Power: 4.4kW
Operating temperature: +80°C -20°C
Axial load: 120 daN

Bi-directional
This will produce 11.34 L/min at 200 bar at 1800rpm with a 6.3cc group 1 pump

PART NO.	FLOW @ 1800RPM L/MIN	WORKING PRESSURE BAR	POWER KW	NOMINAL TORQUE **daNm**	GRP 1 PUMP CC/REV	PRICE
ZZ000465	11.34	200	4.4	2.33	6.3	£509.85

REVERSIBLE HYDRAULIC MECHANICAL CLUTCH AND PUMP ASSEMBLY 14.04 L/MIN

Nominal torque: 2.91 daNm
Max Power: 5.5kW
Operating temperature: +80°C -20°C
Axial load: 120 daN

Bi-directional
This will produce 14.04 L/min at 200 bar at 1800rpm with a 7.8cc group 1 pump

PART NO.	FLOW @ 1800RPM L/MIN	WORKING PRESSURE BAR	POWER KW	NOMINAL TORQUE **daNm**	GRP 1 PUMP CC/REV	PRICE
ZZ000466	14.04	200	5.5	2.91	7.8	£515.05

REVERSIBLE HYDRAULIC MECHANICAL CLUTCH AND PUMP ASSEMBLY 17.64 L/MIN

Nominal torque: 3.66 daNm
Max Power: 6.9kW
Operating temperature: +80°C -20°C
Axial load: 120 daN

Bi-directional
This will produce 17.64 L/min at 190 bar at 1800rpm with a 9.8cc group 1 pump

PART NO.	FLOW @ 1800RPM L/MIN	WORKING PRESSURE BAR	POWER KW	NOMINAL TORQUE **daNm**	GRP 1 PUMP CC/REV	PRICE
ZZ000467	17.64	200	6.9	3.66	9.8	£496.83

REVERSIBLE HYDRAULIC MECHANICAL CLUTCH AND PUMP ASSEMBLY 19.8 L/MIN

Nominal torque: 4.12 daNm
Max Power: 7.76kW
Operating temperature: +80°C -20°C
Axial load: 120 daN

Bi-directional
This will produce 19.8 L/min at 200 bar at 1800rpm with a 11cc group 2 pump

PART NO.	FLOW @ 1800RPM L/MIN	WORKING PRESSURE BAR	POWER KW	NOMINAL TORQUE **daNm**	GRP 2 PUMP CC/REV	PRICE
ZZ000468	19.80	200	7.76	4.12	11	£545.82

REVERSIBLE HYDRAULIC MECHANICAL CLUTCH AND PUMP ASSEMBLY 25.2 L/MIN

Nominal torque: 5.24 daNm
Max Power: 9.88kW
Operating temperature: +80°C -20°C
Axial load: 120 daN

Bi-directional
This will produce 25.2 L/min at 190 bar at 1800rpm with a 14cc group 2 pump

PART NO.	FLOW @ 1800RPM L/MIN	WORKING PRESSURE BAR	POWER KW	NOMINAL TORQUE **daNm**	GRP 2 PUMP CC/REV	PRICE
ZZ000469	25.2	200	9.88	5.24	14	£549.27

GROUP 2

REVERSIBLE HYDRAULIC MECHANICAL CLUTCH AND PUMP ASSEMBLY 28.8 L/MIN

Nominal torque: 5.98 daNm
Max Power: 11.29kW
Operating temperature: +80°C -20°C
Axial load: 120 daN

Bi-directional
This will produce 28.8 L/min at 190 bar at 1800rpm a 16cc group 2 pump

PART NO.	FLOW @ 1800RPM L/MIN	WORKING PRESSURE BAR	POWER KW	NOMINAL TORQUE **daNm**	GRP 2 PUMP CC/REV	LIST PRICE £
ZZ000470	28.8	200	11.29	5.98	16	£546.84

REVERSIBLE HYDRAULIC MECHANICAL CLUTCH AND PUMP ASSEMBLY 34.2 L/MIN

Nominal torque: 7.11 daNm
Max Power: 13.41kW
Operating temperature: +80°C -20°C
Axial load: 120 daN

Bi-directional
This will produce 34.2 L/min at 190 bar at 1800rpm a 19cc group 2 pump

PART NO.	FLOW @ 1800RPM L/MIN	WORKING PRESSURE BAR	POWER KW	NOMINAL TORQUE **daNm**	GRP 2 PUMP CC/REV	LIST PRICE £
ZZ000471	34.2	200	13.41	7.11	19.0	£553.80

REVERSIBLE HYDRAULIC MECHANICAL CLUTCH AND PUMP ASSEMBLY 36.9 L/MIN

Nominal torque: 8.23 daNm
Max Power: 15.52kW
Operating temperature: +80°C -20°C
Axial load: 120 daN

Bi-directional
This will produce 36.9 L/min at 190 bar at 1800rpm a 22cc group 2 pump

PART NO.	FLOW @ 1800RPM L/MIN	WORKING PRESSURE BAR	POWER KW	NOMINAL TORQUE **daNm**	GRP 2 PUMP CC/REV	LIST PRICE £
ZZ000472	36.9	200	15.52	8.23	22.0	£553.80

REVERSIBLE HYDRAULIC MECHANICAL CLUTCH AND PUMP ASSEMBLY 46.8 L/MIN

Nominal torque: 9.73 daNm
Max Power: 18.35kW
Operating temperature: +80°C -20°C
Axial load: 120 daN

Bi-directional
This will produce 46.8 L/min at 180 bar at 1800rpm a 26cc group 2 pump

PART NO.	FLOW @ 1800RPM L/MIN	WORKING PRESSURE BAR	POWER KW	NOMINAL TORQUE **daNm**	GRP 2 PUMP CC/REV	LIST PRICE £
ZZ000473	46.8	200	18.35	9.73	26.0	£641.86

GROUP 3

REVERSIBLE HYDRAULIC MECHANICAL CLUTCH AND PUMP ASSEMBLY 52.2 L/MIN

Nominal torque: 10.86 daNm
Max Power: 20.47kW
Operating temperature: +80°C -20°C
Axial load: 120 daN

Bi-directional
This will produce 52.2 L/min at 200 bar at 1800rpm a 29cc group 3 pump

PART NO.	FLOW @ 1800RPM L/MIN	WORKING PRESSURE BAR	POWER KW	NOMINAL TORQUE **daNm**	GRP 3 PUMP CC/REV	LIST PRICE £
ZZ000474	52.2	200	20.47	10.86	29.0	£823.80

REVERSIBLE HYDRAULIC MECHANICAL CLUTCH AND PUMP ASSEMBLY 59.4 L/MIN

Nominal torque: 12.35 daNm
Max Power: 23.29kW
Operating temperature: +80°C -20°C
Axial load: 120 daN

Bi-directional
This will produce 59.4 L/min at 200 bar at 1800rpm a 33cc group 3 pump

PART NO.	FLOW @ 1800RPM L/MIN	WORKING PRESSURE BAR	POWER KW	NOMINAL TORQUE **daNm**	GRP 3 PUMP CC/REV	LIST PRICE £
ZZ000475	59.4	200	23.29	12.35	33.0	£825.09

REVERSIBLE HYDRAULIC MECHANICAL CLUTCH AND PUMP ASSEMBLY 64.8 L/MIN

Nominal torque: 13.48 daNm
Max Power: 25.41kW
Operating temperature: +80°C -20°C
Axial load: 120 daN

Bi-directional
This will produce 64.8 L/min at 200 bar at 1800rpm a 36cc group 3 pump

PART NO.	FLOW @ 1800RPM L/MIN	WORKING PRESSURE BAR	POWER KW	NOMINAL TORQUE **daNm**	GRP 3 PUMP CC/REV	LIST PRICE £
ZZ000476	64.8	200	25.41	13.48	36.0	£825.09

REVERSIBLE HYDRAULIC MECHANICAL CLUTCH AND PUMP ASSEMBLY 79.2 L/MIN

Nominal torque: 16.48 daNm
Max Power: 31.06kW
Operating temperature: +80°C -20°C.
Axial load: 120 daN

Bi-directional
This will produce 79.2 L/min at 200 bar at 1800rpm a 44cc group 3 pump

PART NO.	FLOW @ 1800RPM L/MIN	WORKING PRESSURE BAR	POWER KW	NOMINAL TORQUE **daNm**	GRP 3 PUMP CC/REV	LIST PRICE £
ZZ000477	79.2	200	31.06	16.48	44	£837.03

PTO GEARBOXES

SERIES 60000 PTO GEARBOX PUMP GROUP 2 • 10KW.....452
SERIES 70000 PTO GEARBOX PUMP GROUP 3 • 20KW.....453
SERIES 70000 PTO GEARBOX WITH THROUGH SHAFTS PUMP GROUP 3 • 20KW.....454
SERIES 80000 PTO GEARBOX PUMP GROUP 3.5 • 36KW.....454
SERIES MLT 3.5 PTO GEARBOX PUMP GROUP 3.5 • 40KW.....456
SERIES 85000 PTO GEARBOX DUAL PUMP GROUP 2 AND/OR GROUP 3 • 35KW 457
SERIES 90000 PTO GEARBOX DUAL PUMP GROUP 3 AND/OR GROUP 3.5 • 45KW 458
SERIES 91000 PTO GEARBOX DUAL PUMP GROUP 4 • 74KW.....459
FLANGES TO FIT PTO GEARBOXES 60000-70000-70012-8500.....460
FLANGES TO FIT PTO GEARBOXES 80000-90000-91000 461
SERIES 70012 CAST IRON PTO GEARBOX PUMP GROUP 3 • 37KW.....462
SERIES 97601 CAST IRON PTO GEARBOX PUMP SAE 'A' + SAE 'B'.....463
SERIES 97701 CAST IRON PTO GEARBOX PUMP GROUP 2 + GROUP 3 464

The Pto Gearboxes are designed for connecting gear pumps to farm tractor power take offs (PTO). Output speed of power take offs is 540 rpm which can be compared with the proper running speeds of hydraulic pumps. Different input running speeds can also be suitable,provided that the PTO gearbox output speed does not exceed 3000 rpm.

Housing
Made in shell-cast aluminum or in high mechanical resistance cast iron.

Gears
The gears have manufactured to ISO/DIN 3990-88 standards.Made in Steel UNI 18 PCR M03.Stub teeth guarantee very high resistance and run very quietly.

Shafts
Made in steel UNI 16 CRN4.They are coupled with splined gears and are designed to stand the torque values stated in the catalogue.

Torques
The torque figures mentioned in the technical charts of all the PTO Gearboxes refer to continuous duty cycles. Torques under intermittent working conditions can be exceeded by 20%.

Lubrication
SAE 90 gear oil must be put in the pto gearbox prior to use-please note we do not supply the gear oil and will not accept responsibility for customers not putting oil in.
Change the oil after the first 60-80 hours and then every 12 months or 1500 hours which ever falls first.

Maintenance
Please check the oil level via the special oil window every 50 hours. Working temperatures should not exceed 120 degrees celcius under continuos duty cycle.

Specifiy the correct pto gearbox
Please check with the Technical Sales Office if you are not sure which pto gearbox to use.

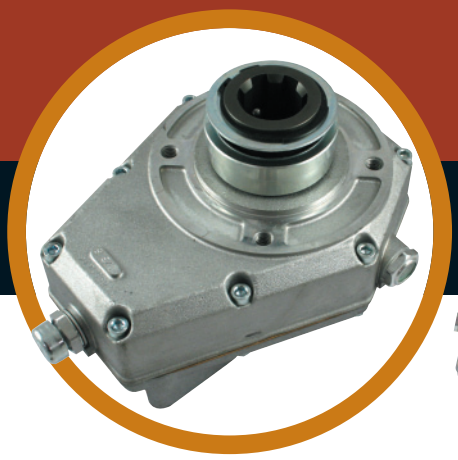

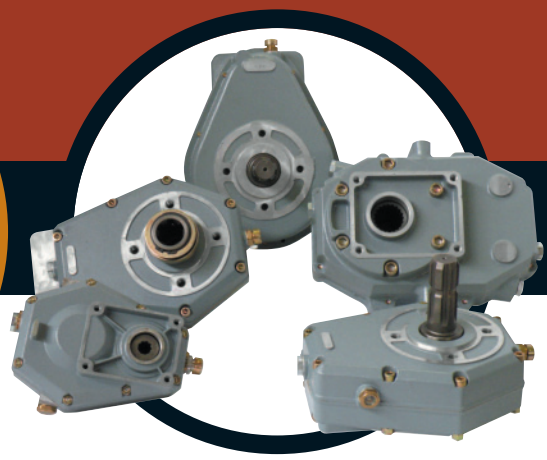

FLOWFIT

SERIES 60000 PTO GEARBOX PUMP GROUP 2 • 10KW

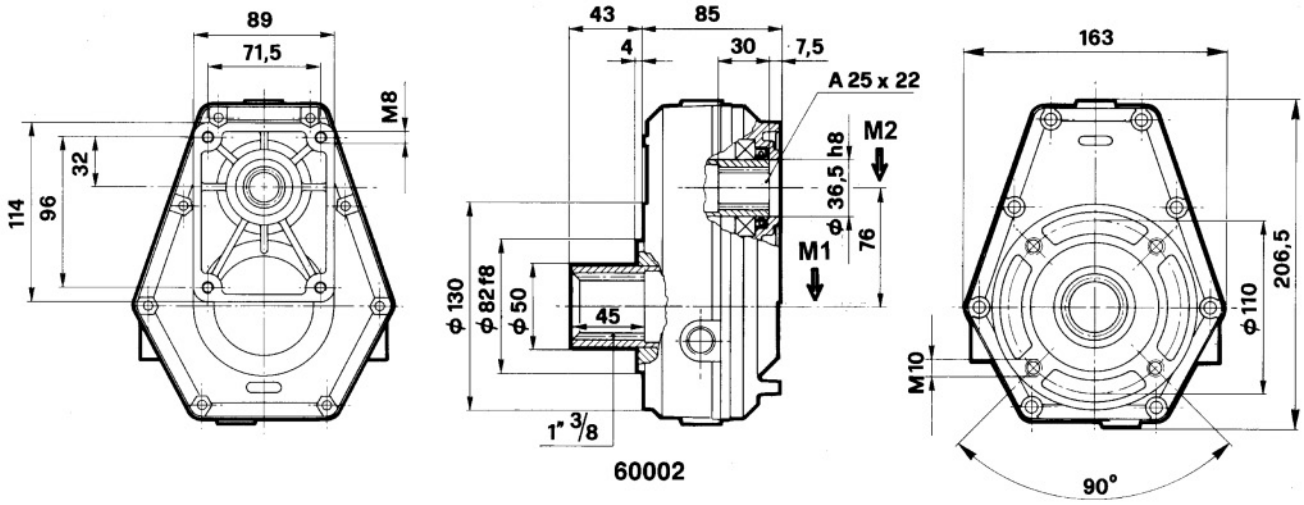

MAX OIL LEVEL 0.22 LITRE

M1 MAXIMUM CONTINUOUS TORQUE OF THE PTO GEARBOX (Input side daNm)	M2 MAXIMUM TORQUE OF THE PTO GEARBOX (Output side daNm)	N1 TRACTOR OUTPUT SPEED RPM	N2 FINAL OUTPUT SPEED OF PUMP/GEARBOX ASSEMBLY RPM	I RATIO OF SPEED INCREASE	KW MAX TRANSMITTABLE POWER	WEIGHT KG
17,8	11,9	540	810	1,5	10	5,5
15,2	7,6	540	1080	2	10	5,5
16,5	6,6	540	1350	2,5	10	5,5
18	5,5	540	1680	3	10	5,5
18,6	5,8	540	1836	3,5	10	5,5
15,9	4,2	540	2052	3,8	10	5,5

FACTORY PREFIX
33

PTO GEARBOX
60001
60002
60003
60004

RATIO AVAILABLE
1,5
2
2,5
3
3,5
3,8

PART NO.	DESCRIPTION OF PTO GEARBOX	PRICE
33 - 60001-1	Pto Gearbox gr.2 male shaft R.1:1,5	£179.16
33 - 60001-2	Pto Gearbox gr.2 male shaft R.1:2	£191.29
33 - 60001-3	Pto Gearbox gr.2 male shaft R.1:2,5	£191.29
33 - 60001-4	Pto Gearbox gr.2 male shaft R.1:3	£191.29
33 - 60001-5	Pto Gearbox gr.2 male shaft R.1:3,5	£191.29
33 - 60001-6	Pto Gearbox gr.2 male shaft R.1:3,8	£191.29
33 - 60001-6/9S	Pto Gearbox gr.2 male shaft R.1:3,8 with pinion gear T9 SAE DP	£191.29
33 - 60001-6/0	Pto Gearbox gr.2 male shaft R.1:3,8 with oil level inverted	£169.02
33 - 60002-1	Pto Gearbox gr.2 female shaft long R.1:1,5	£191.29
33 - 60002-2	Pto Gearbox gr.2 female shaft long R.1:2	£191.29
33 - 60002-3	Pto Gearbox gr.2 female shaft long R.1:2,5	£169.02
33 - 60002-4	Pto Gearbox gr.2 female shaft long R.1:3	£169.02
33 - 60002-5	Pto Gearbox gr.2 female shaft long R.1:3,5	£169.02
33 - 60002-6	Pto Gearbox gr.2 female shaft long R.1:3,8	£169.02
33 - 60002-6/2L	Pto Gearbox gr.2 female shaft long R.1:3,8 with 2 oil level plugs	£169.02
33 - 60003-1	Pto Gearbox gr.2 female shaft short R.1:1,5	£191.29
33 - 60003-2	Pto Gearbox gr.2 female shaft short R.1:2	£191.29
33 - 60003-3	Pto Gearbox gr.2 female shaft short R.1:2,5	£169.02
33 - 60003-4	Pto Gearbox gr.2 female shaft short R.1:3	£169.02
33 - 60003-5	Pto Gearbox gr.2 female shaft short R.1:3,5	£169.02
33 - 60003-6	Pto Gearbox gr.2 female shaft short R.1:3,8	£169.02
33 - 60004-1	Pto Gearbox gr.2 female shaft quick-fitting R.1:1,5	£209.64
33 - 60004-2	Pto Gearbox gr.2 female shaft quick-fitting R.1:2	£220.11
33 - 60004-3	Pto Gearbox gr.2 female shaft quick-fitting R.1:2,5	£196.52
33 - 60004-4	Pto Gearbox gr.2 female shaft quick-fitting R.1:3	£196.52
33 - 60004-4/GC	Pto Gearbox gr.2 female shaft quick-fitting R.1:3 Remac type	£196.52
33 - 60004-5	Pto Gearbox gr.2 female shaft quick-fitting R.1:3,5	£196.52
33 - 60004-6	Pto Gearbox gr.2 female shaft quick-fitting R.1:3,8	£196.52
33 - 60004-6/1PL	Pto Gearbox gr.2 female shaft quick-fitting R.1:3,8 for 1PL pump	£196.52
33 - 60004-6/GC	Pto Gearbox gr.2 female shaft quick-fitting R.1:3,8 Remac type	£196.52
If the part number needed is not listed please ask the Flowfit Sales Team		

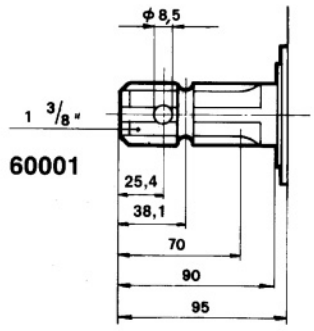

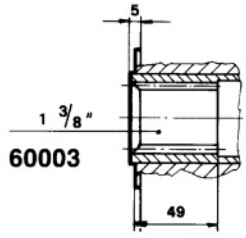

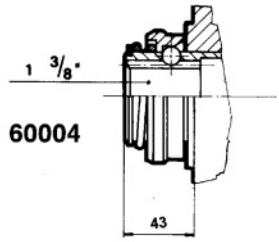

SERIES 70000 PTO GEARBOX PUMP GROUP 3 • 20KW

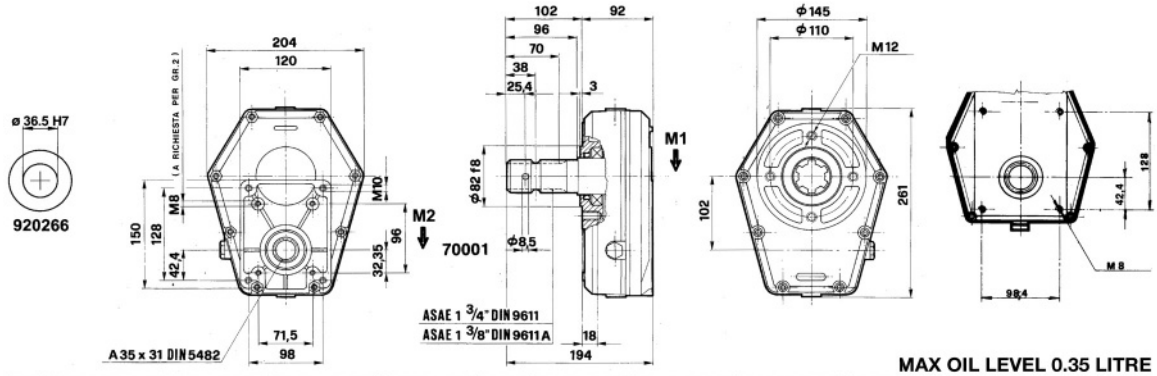

MAX OIL LEVEL 0.35 LITRE

M1 MAXIMUM CONTINUOUS TORQUE OF THE PTO GEARBOX (Input side daNm)	M2 MAXIMUM TORQUE OF THE PTO GEARBOX (Output side daNm)	N1 TRACTOR OUTPUT SPEED RPM	N2 FINAL OUTPUT SPEED OF PUMP/GEARBOX ASSEMBLY RPM	I RATIO OF SPEED INCREASE	KW MAX TRANSMITTABLE POWER	WEIGHT KG
31	31	540	540	1	20	8,1
38	26	540	810	1,5	20	8,1
43	21	540	1080	2	20	8,1
46	18	540	1408	2,5	20	8,1
49	16	540	1620	3	20	8,1
46	13	540	1836	3,5	20	8,1
43,7	11,5	540	2057	3,8	20	8,1

FACTORY PREFIX
34

PTO GEARBOX
70001
70002
70003
70004
70210

RATIO AVAILABLE
1
1,5
2
2,5
3
3,5
3,8

PART NO.	DESCRIPTION OF PTO GEARBOX	PRICE
34 - 70001-1	Pto Gearbox gr.3 male shaft R.1:1,5	£281.70
34 - 70001-2	Pto Gearbox gr.3 male shaft R.1:2	£281.70
34 - 70001-2/21	Pto Gearbox gr.3 male shaft R.1:2 T21 16/32 DP.	£275.14
34 - 70001-2/8	Pto Gearbox gr.3 male shaft R.1:2 with male pinion 1'3/8"	£286.93
34 - 70001-3	Pto Gearbox gr.3 male shaft R.1:2,5	£229.28
34 - 70001-3/F8	Pto Gearbox gr.3 male shaft R.1:2,5 with female pinion gear 1'3/8	£229.28
34 - 70001-4	Pto Gearbox gr.3 male shaft R.1:3	£229.28
34 - 70001-4/2	Pto Gearbox gr.3 male shaft R.1:3 for pump gr.2	£239.77
34 - 70001-5	Pto Gearbox gr.3 male shaft R.1:3,5	£229.28
34 - 70001-5/2	Pto Gearbox gr.3 male shaft R.1:3,5 for pump gr.2	£229.28
34 - 70001-5/25	Pto Gearbox gr.3 male shaft R.1:3,5 with female pinion gear dia.2	£281.68
34 - 70001-6	Pto Gearbox gr.3 male shaft R.1:3,8	£281.68
34 - 70001-6/2	Pto Gearbox gr.3 male shaft R.1:3,8 for pump gr.2	£239.77
34 - 70002-1	Pto Gearbox gr.3 female shaft long R.1:1,5	£281.68
34 - 70002-2	Pto Gearbox gr.3 female shaft long R.1:2 NR	£281.68
34 - 70002-3	Pto Gearbox gr.3 female shaft long R.1:2,5	£229.28
34 - 70002-3/2	Pto Gearbox gr.3 female shaft long R.1:2,5 for pump gr.2	£239.77
34 - 70002-4	Pto Gearbox gr.3 female shaft long R.1:3	£229.28
34 - 70002-4/2	Pto Gearbox gr.3 female shaft long R.1:3 for pump gr.2	£239.77
34 - 70002-4/35	Pto Gearbox gr.3 female through-shaft dia.35 R.1:3	£349.83
34 - 70002-5	Pto Gearbox gr.3 female shaft long R.1:3,5	£229.28
34 - 70002-5/2	Pto Gearbox gr.3 female shaft long R.1:3,5 for pump gr.2	£239.77
34 - 70002-6	Pto Gearbox gr.3 female shaft long R.1:3,8	£229.28
34 - 70002-6/2	Pto Gearbox gr.3 female shaft long R.1:3,8 for pump gr.2	£239.77
34 - 70003-1	Pto Gearbox gr.3 female shaft short R.1:1,5	£396.18
34 - 70003-2	Pto Gearbox gr.3 female shaft short R.1:2	£281.68
34 - 70003-3	Pto Gearbox gr.3 female shaft short R.1:2,5	£229.28
34 - 70003-4	Pto Gearbox gr.3 female shaft short R.1:3	£229.28
34 - 70003-5	Pto Gearbox gr.3 female shaft short R.1:3,5	£229.28
34 - 70003-6	Pto Gearbox gr.3 female shaft short R.1:3,8	£229.28
34 - 70004-1	Pto Gearbox gr.3 female shaft quick-fitting R.1:1,5	£307.90
34 - 70004-2	Pto Gearbox gr.3 female shaft quick-fitting R.1:2	£307.90
34 - 70004-3	Pto Gearbox gr.3 female shaft quick-fitting R.1:2,5	£259.42
34 - 70004-3/220S	Pto Gearbox gr.3 female shaft quick-fitting R.1:2,5 Z.20 1'3/4" fo PZ	£440.23
34 - 70004-4	Pto Gearbox gr.3 female shaft quick-fitting R.1:3	£259.42
34 - 70004-4/100	Pto Gearbox gr.3 female shaft quick-fitting R.1:3 L.100	£323.63
34 - 70004-4/2	Pto Gearbox gr.3 female shaft quick-fitting R.1:3 for pump gr.2	£268.59
34 - 70004-5	Pto Gearbox gr.3 female shaft quick-fitting R.1:3,5	£259.42
34 - 70004-5/2	Pto Gearbox gr.3 female shaft quick-fitting R.1:3,5 for pump gr.2	£268.59
34 - 70004-6	Pto Gearbox gr.3 female shaft quick-fitting R.1:3,8	£259.41
34 - 70004-6/2	Pto Gearbox gr.3 female shaft quick-fitting R.1:3,8 for pump gr.2	£268.59
34 - 70004-6/2PL	Pto Gearbox gr.3 female shaft quick-fitting R.1:3,8 for 2PL pump	£259.42
If the part number needed is not listed please ask the Flowfit Sales Team		

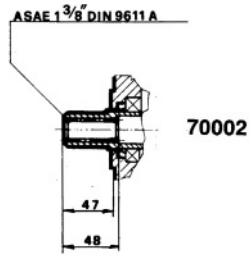

70002

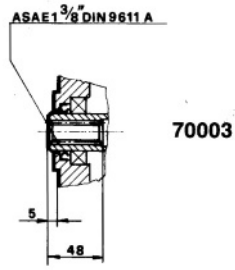

70003

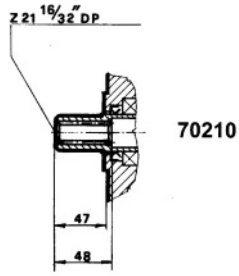

70210

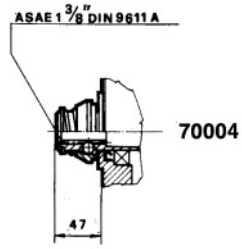

70004

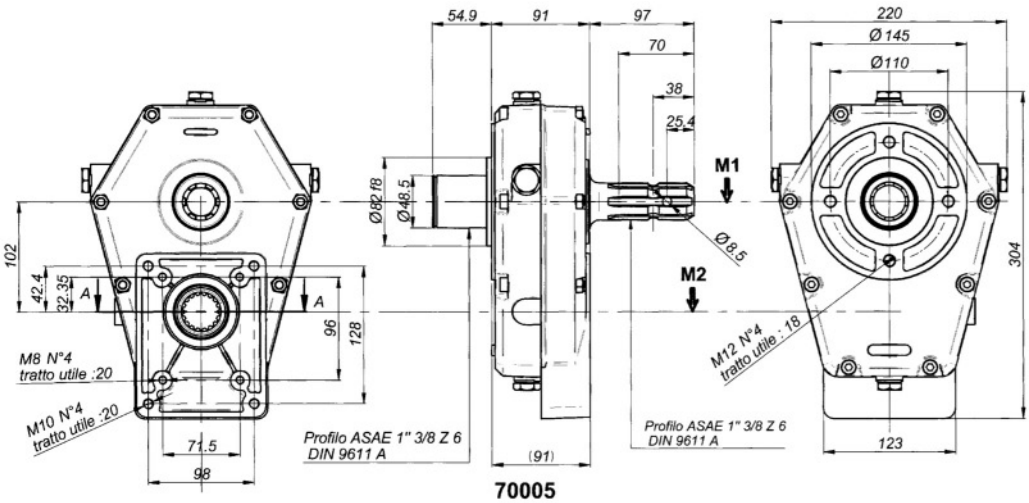

70005

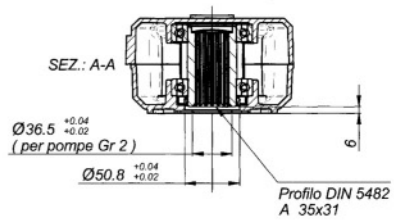

MAX OIL LEVEL 0.35 LITRE

M1 MAXIMUM CONTINUOUS TORQUE OF THE PTO GEARBOX (Input side daNm)	M2 MAXIMUM TORQUE OF THE PTO GEARBOX (Output side daNm)	N1 TRACTOR OUTPUT SPEED RPM	N2 FINAL OUTPUT SPEED OF PUMP/GEARBOX ASSEMBLY RPM	I RATIO OF SPEED INCREASE	KW MAX TRANSMITTABLE POWER	WEIGHT KG
31	31	540	540	1	20	9,5
38	26	540	810	1,5	20	9,5
43	21	540	1080	2	20	9,5
46	18	540	1408	2,5	20	9,5
49	16	540	1620	3	20	9,5
46	13	540	1836	3,5	20	9,5
43,7	11,5	540	2057	3,8	20	9,5

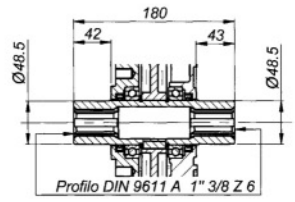

70006

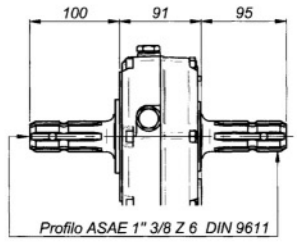

70007

FACTORY PREFIX
34

PTO GEARBOX
70005
70006
70007
70008
70009
70011

RATIO AVAILABLE
1
1,5
2
2,5
3
3,5
3,8

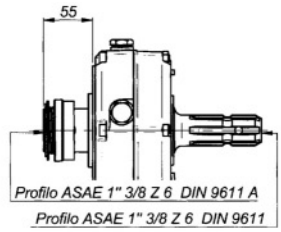

70008

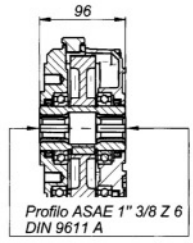

70009

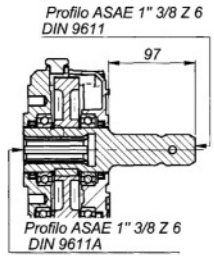

70011

PART NO.	DESCRIPTION OF PTO GEARBOX	PRICE
34 - 70005-1	Pto Gearbox gr.3 male-female through-shaft R.1:1,5	£403.54
34 - 70005-2	Pto Gearbox gr.3 male-female through-shaft R.1:2	£403.54
34 - 70005-3	Pto Gearbox gr.3 male-female through-shaft R.1:2,5	£352.45
34 - 70005-4	Pto Gearbox gr.3 male-female through-shaft R.1:3	£352.45
34 - 70005-5	Pto Gearbox gr.3 male-female through-shaft R.1:3,5	£352.45
34 - 70005-6	Pto Gearbox gr.3 male-female through-shaft R.1:3,8	£352.45
34 - 70006-1	Pto Gearbox gr.3 female-female through-shaft R.1:1,5	£403.54
34 - 70006-2	Pto Gearbox gr.3 female-female through-shaft R.1:2	£403.54
34 - 70006-3	Pto Gearbox gr.3 female-female through-shaft R.1:2,5	£352.45
34 - 70006-4	Pto Gearbox gr.3 female-female through-shaft R.1:3	£352.45
34 - 70006-5	Pto Gearbox gr.3 female-female through-shaft R.1:3,5	£352.45
34 - 70006-6	Pto Gearbox gr.3 female-female through-shaft R.1:3,8	£352.45
34 - 70007-1	Pto Gearbox gr.3 male-male through-shaft R.1:1,5	£403.54
34 - 70007-2	Pto Gearbox gr.3 male-male through-shaft R.1:2	£403.54
34 - 70007-3	Pto Gearbox gr.3 male-male through-shaft R.1:2,5	£352.45
34 - 70007-4	Pto Gearbox gr.3 male-male through-shaft R.1:3	£352.45
34 - 70007-5	Pto Gearbox gr.3 male-male through-shaft R.1:3,5	£352.45
34 - 70007-6	Pto Gearbox gr.3 male-male through-shaft R.1:3,8	£352.45
34 - 70008-3	Pto Gearbox gr.3 male-female shaft quick-fitting R.1:2,5 Flange 2	£400.92
34 - 70008-4	Pto Gearbox gr.3 male-female shaft quick-fitting R.1:3 Flange 2/3	£400.92
34 - 70008-5	Pto Gearbox gr.3 male-female shaft quick-fitting R.1:3,5 Flange 2	£400.92
34 - 70008-6	Pto Gearbox gr.3 male-female shaft quick-fitting R.1:3,8 Flange 2	£400.92
34 - 70009-4	Pto Gearbox gr.3 female through-shaft 1'3/8" (par) R.1:3 Flange	£352.45
34 - 70009-5	Pto Gearbox gr.3 female through-shaft 1'3/8" (par) R.1:3,5 Flange	£352.45
34 - 70009-6	Pto Gearbox gr.3 female through-shaft 1'3/8" (par) R.1:3,8 Flange	£352.45
34 - 70011-2	Pto Gearbox gr.3 male-female shaft par R.1:2	£403.54
34 - 70011-4	Pto Gearbox gr.3 male-female shaft par R.1:3	£352.45
34 - 70011-5	Pto Gearbox gr.3 male-female shaft par R.1:3,5	£352.45
34 - 70011-6	Pto Gearbox gr.3 male-female shaft par R.1:3,8	£352.45
If the part number needed is not listed please ask the Flowfit Sales Team		

SERIES 80000 PTO GEARBOX PUMP GROUP 3.5 • 36KW

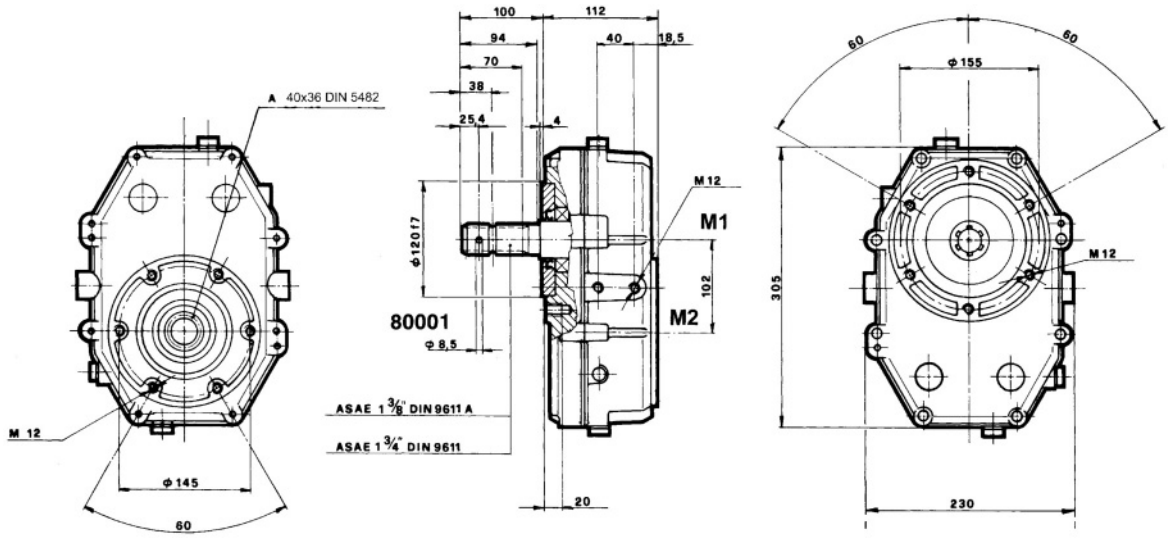

MAX OIL LEVEL 1 LITRE

M1 MAXIMUM CONTINUOUS TORQUE OF THE PTO GEARBOX (Input side daNm)	M2 MAXIMUM TORQUE OF THE PTO GEARBOX (Output side daNm)	N1 TRACTOR OUTPUT SPEED RPM	N2 FINAL OUTPUT SPEED OF PUMP/GEARBOX ASSEMBLY RPM	I RATIO OF SPEED INCREASE	KW MAX TRANSMITTABLE POWER	WEIGHT KG
46,6	46,6	540	540	1	36	13,5
48	32	540	810	1,5	36	13,5
48,4	24,2	540	1080	2	36	13,5
46,8	18	540	1408	2,5	36	13,5
48,9	16,3	540	1620	3	36	13,5
45,9	13,5	540	1836	3,5	36	13,5
47,5	12	540	2052	3,8	36	13,5
47,2	11,8	540	2160	4	36	13,5
47	9,8	540	2592	4,8	36	13,5

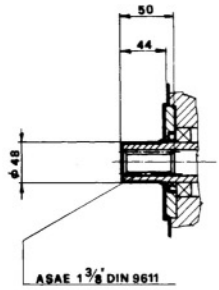

80002

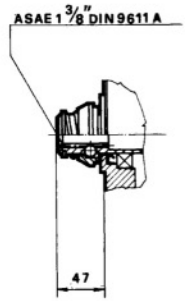

80003

FACTORY PREFIX
35

PTO GEARBOX
80001
80002
80003
80004
80005

RATIO AVAILABLE
1
1,5
2
2,5
3
3,5
3,8
4
4,8

PART NO.	DESCRIPTION OF PTO GEARBOX	PRICE
35 - 80001-1	Pto Gearbox gr.3,5 male shaft R.1:1 without Flange	£538.40
35 - 80001-2	Pto Gearbox gr.3,5 male shaft R.1:1,5 without Flange	£538.40
35 - 80001-3	Pto Gearbox gr.3,5 male shaft R.1:2 without Flange	£538.40
35 - 80001-4	Pto Gearbox gr.3,5 male shaft R.1:2,5 without Flange	£494.52
35 - 80001-5	Pto Gearbox gr.3,5 male shaft R.1:3 without Flange	£494.51
35 - 80001-6	Pto Gearbox gr.3,5 male shaft R.1:3,5 without Flange	£556.84
35 - 80001-7	Pto Gearbox gr.3,5 male shaft R.1:3,8 without Flange	£556.84
35 - 80001-8	Pto Gearbox gr.3,5 male shaft R.1:4 without Flange	£576.50
35 - 80001-9	Pto Gearbox gr.3,5 male shaft R.1:4,8 without Flange	£576.50
35 - 80002-1	Pto Gearbox gr.3,5 female shaft long R.1:1 without flange	£538.49
35 - 80002-2	Pto Gearbox gr.3,5 female shaft long R.1:1,5 without flange	£538.49
35 - 80002-3	Pto Gearbox gr.3,5 female shaft long R.1:2 without flange cglionPr	£538.49
35 - 80002-4	Pto Gearbox gr.3,5 female shaft long R.1:2,5 without flange	£493.95
35 - 80002-5	Pto Gearbox gr.3,5 female shaft long R.1:3 without flange	£493.95
35 - 80002-6	Pto Gearbox gr.3,5 female shaft long R.1:3,5 without flange	£556.84
35 - 80002-7	Pto Gearbox gr.3,5 female shaft long R.1:3,8 without flange	£556.83
35 - 80002-8	Pto Gearbox gr.3,5 female shaft long R.1:4 without flange	£576.50
35 - 80002-9	Pto Gearbox gr.3,5 female shaft long R.1:4,8 without flange	£576.50
35 - 80003-1	Pto Gearbox gr.3 female shaft quick-fitting R.1:1 without Flange	£568.64
35 - 80003-2	Pto Gearbox gr.3 female shaft quick-fitting R.1:1,5 without Flange	£568.64
35 - 80003-3	Pto Gearbox gr.3 female shaft quick-fitting R.1:2 without Flange	£568.64
35 - 80003-4	Pto Gearbox gr.3 female shaft quick-fitting R.1:2,5 without Flange	£568.64
35 - 80003-5	Pto Gearbox gr.3 female shaft quick-fitting R.1:3 without Flange	£568.64
35 - 80003-6	Pto Gearbox gr.3 female shaft quick-fitting R.1:3,5 without Flange	£588.29
35 - 80003-7	Pto Gearbox gr.3 female shaft quick-fitting R.1:3,8 without Flange	£588.29
35 - 80003-8	Pto Gearbox gr.3 female shaft quick-fitting R.1:4 without Flange	£606.63
35 - 80003-9	Pto Gearbox gr.3 female shaft quick-fitting R.1:4,8 without Flange	£606.63
If the part number needed is not listed please ask the Flowfit Sales Team		

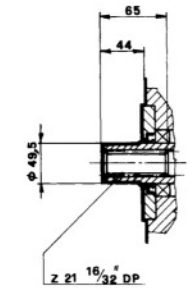

80004

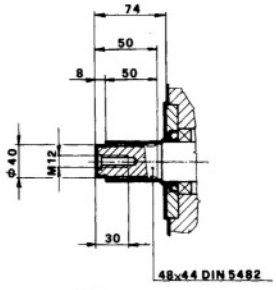

80005

SERIES MLT 3.5 PTO GEARBOX PUMP GROUP 3.5 • 40KW

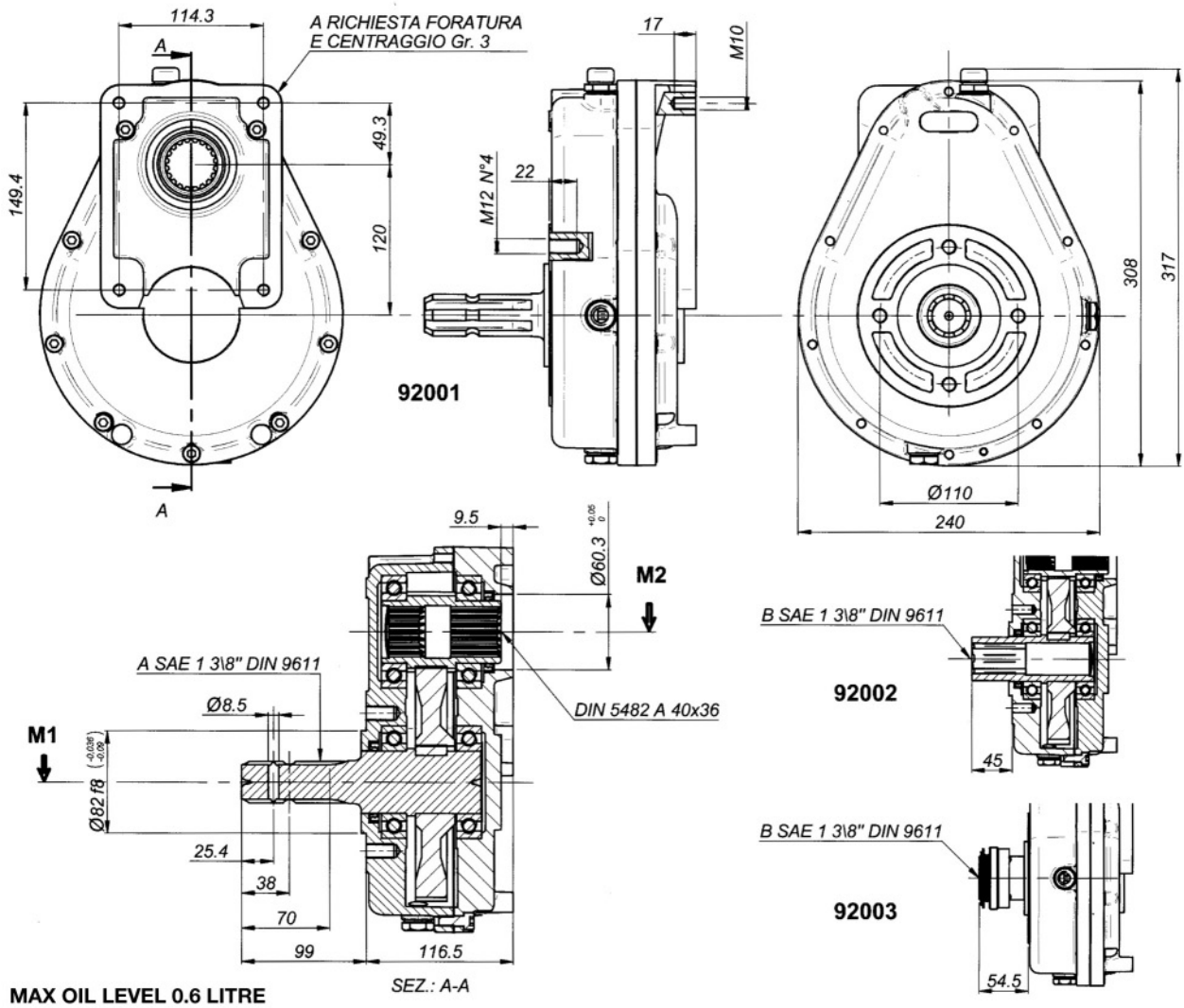

MAX OIL LEVEL 0.6 LITRE

M1 MAXIMUM CONTINUOUS TORQUE OF THE PTO GEARBOX (Input side daNm)	M2 MAXIMUM TORQUE OF THE PTO GEARBOX (Output side daNm)	N1 TRACTOR OUTPUT SPEED RPM	N2 FINAL OUTPUT SPEED OF PUMP/GEARBOX ASSEMBLY RPM	I RATIO OF SPEED INCREASE	KW MAX TRANSMITTABLE POWER	WEIGHT KG
80	40	2500	1250	2	40	16
88	35	2500	1000	2.5	40	16
99	32	2500	806	3.1	40	16
105	28	2500	675	3.7	40	16
110	27	2500	610	4.1	40	16

FACTORY PREFIX
82

PTO GEARBOX
92001
92002
92003

RATIO AVAILABLE
2
2,5
3,1
3,7
4,1

PART NO.	DESCRIPTION OF PTO GEARBOX	PRICE
82 - 92001-2	Pto Gearbox MLT3,5 Remac male shaft R.1:2,5	£779.58
82 - 92001-3	Pto Gearbox MLT3,5 Remac male shaft R.1:3	£779.58
82 - 92001-3/3	Pto Gearbox MLT3,5 Remac male shaft R.1:3 for pump gr.3	£873.92
82 - 92001-5	Pto Gearbox MLT3,5 Remac male shaft R.1:3,7	£779.58
82 - 92001-5/3	Pto Gearbox MLT3,5 Remac male shaft R.1:3,7 for GR.3	£873.92
82 - 92002-3	Pto Gearbox MLT3,5 Remac female shaft long R.1:3	£621.04
82 - 92002-3/3	Pto Gearbox MLT3,5 Remac female shaft long R.1:3 for pump gr	£873.92
82 - 92002-5	Pto Gearbox MLT3,5 Remac female shaft long R.1:3,7	£779.58
82 - 92002-5/3	Pto Gearbox MLT3,5 Remac female shaft long R.1:3,7 for pump	£873.92
82 - 92003-3	Pto Gearbox MLT3,5 Remac female shaft quick-fitting R.1:3	£811.02
82 - 92003-3/3	Pto Gearbox MLT3,5 Remac female shaft quick-fitting R.1:3	£905.36
If the part number needed is not listed please ask the Flowfit Sales Team		

50% OFF ALL PRICES

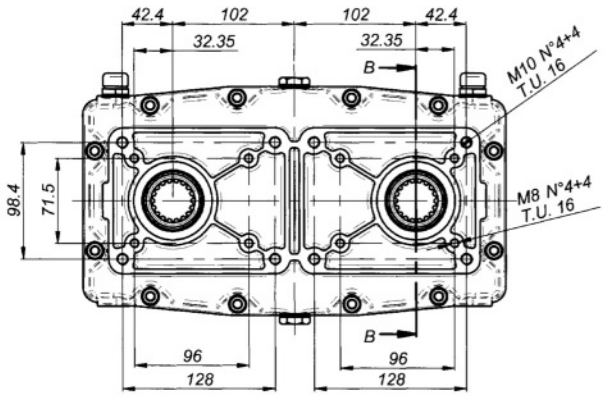

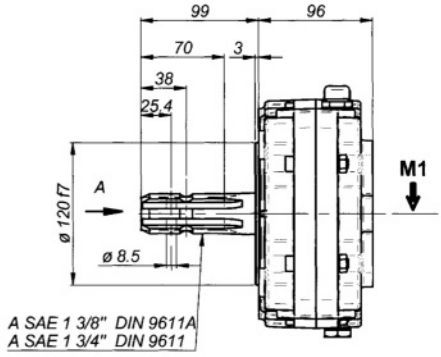

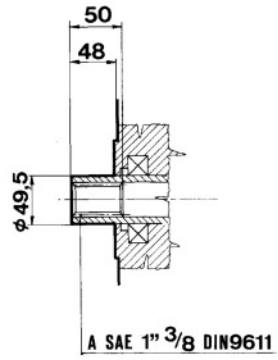

85002

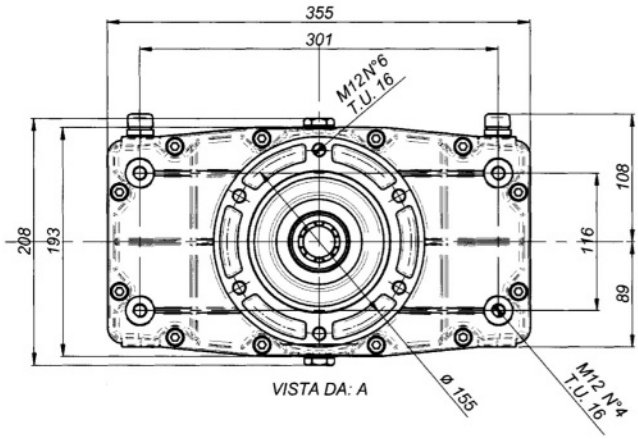

85001

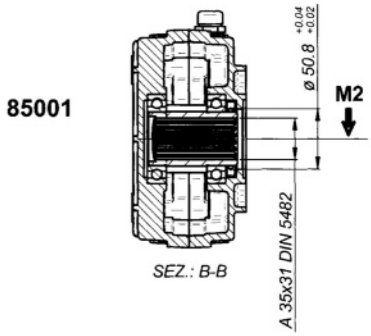

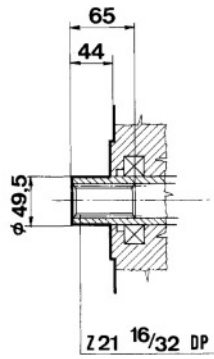

85004

MAX OIL LEVEL 1.3 LITRE

M1 MAXIMUM CONTINUOUS TORQUE OF THE PTO GEARBOX (Input side daNm)	M2 MAXIMUM TORQUE OF THE PTO GEARBOX (Output side daNm)	N1 TRACTOR OUTPUT SPEED RPM	N2 FINAL OUTPUT SPEED OF PUMP/GEARBOX ASSEMBLY RPM	I RATIO OF SPEED INCREASE	KW MAX TRANSMITTABLE POWER	WEIGHT KG
63,4	31,7	540	540	1	35	14
76,8	25,6	540	810	1.5	35	14
86,8	23,7	540	1080	2	35	14
92,5	17,8	540	1408	2.5	35	14
96,6	16,1	540	1620	3	35	14
90,4	13,3	540	1836	3.5	35	14
87,4	16.6	540	2057	3.8	35	14

FACTORY PREFIX
36

PTO GEARBOX
85001
85002
85003
85004
85005

RATIO AVAILABLE
1
1,5
2
2,5
3
3,5
3,8

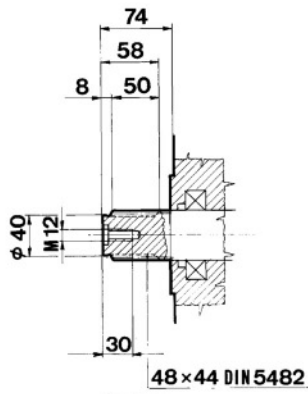

85005

PART NO.	DESCRIPTION OF PTO GEARBOX	PRICE
36 - 85001-1	Pto Gearbox Coupling gear gr.3/2 male shaft R.1:1	£550.30
36 - 85001-2	Pto Gearbox Coupling gear gr.3/2 male shaft R.1:1,5	£550.30
36 - 85001-3	Pto Gearbox Coupling gear gr.3/2 male shaft R.1:2	£550.30
36 - 85001-4	Pto Gearbox Coupling gear gr.3/2 male shaft R.1:2,5	£500.11
36 - 85001-5	Pto Gearbox Coupling gear gr.3/2 male shaft R.1:3	£500.11
36 - 85001-6	Pto Gearbox Coupling gear gr.3/2 male shaft R.1:3,5	£500.11
36 - 85001-7	Pto Gearbox Coupling gear gr.3/2 male shaft R.1:3,8 £	£500.11
36 - 85002-1	Pto Gearbox Coupling gear gr.3/2 female shaft long R.1:1	£550.30
36 - 85002-2	Pto Gearbox Coupling gear gr.3/2 female shaft long R.1:1,5	£550.30
36 - 85002-3	Pto Gearbox Coupling gear gr.3/2 female shaft long R.1:2	£550.30
36 - 85002-4	Pto Gearbox Coupling gear gr.3/2 female shaft long R.1:2,5	£500.11
36 - 85002-5	Pto Gearbox Coupling gear gr.3/2 female shaft long R.1:3	£500.11
36 - 85002-6	Pto Gearbox Coupling gear gr.3/2 female shaft long R.1:3,5	£500.11
36 - 85002-7	Pto Gearbox Coupling gear gr.3/2 female shaft long R.1:3,8	£500.11
36 - 85003-1	Pto Gearbox Coupling gear gr.3/2 female shaft quick-fitting R.1:1	£579.11
36 - 85003-2	Pto Gearbox Coupling gear gr.3/2 female shaft quick-fitting R.1:1,5	£579.11
36 - 85003-3	Pto Gearbox Coupling gear gr.3/2 female shaft quick-fitting R.1:2	£579.11
36 - 85003-4	Pto Gearbox Coupling gear gr.3/2 female shaft quick-fitting R.1:2,5	£528.02
36 - 85003-5	Pto Gearbox Coupling gear gr.3/2 female shaft quick-fitting R.1:3	£528.02
36 - 85003-6	Pto Gearbox Coupling gear gr.3/2 female shaft quick-fitting R.1:3,5	£528.02
36 - 85003-7	Pto Gearbox Coupling gear gr.3/2 female shaft quick-fitting R.1:3,8	£528.02
If the part number needed is not listed please ask the Flowfit Sales Team		

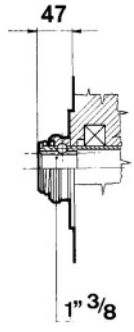

85003

SERIES 90000 PTO GEARBOX DUAL PUMP GROUP 3 AND/OR GROUP 3.5 • 45KW FLOWFIT

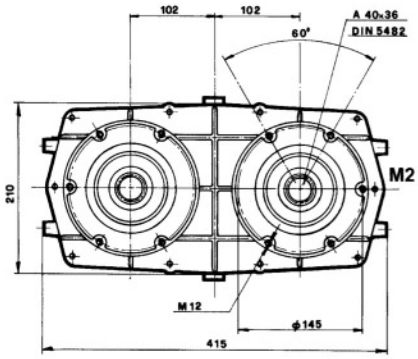

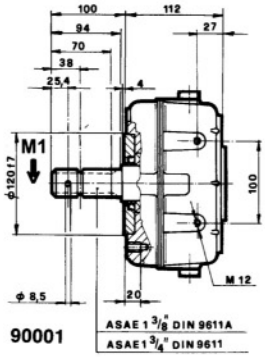

90001

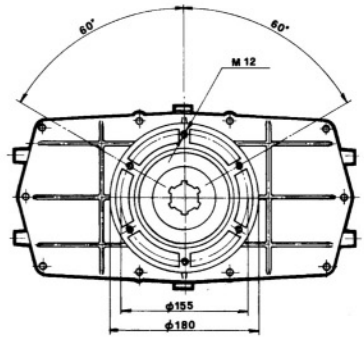

MAX OIL LEVEL 1.8 LITRE

M1 MAXIMUM CONTINUOUS TORQUE OF THE PTO GEARBOX (Input side daNm)	M2 MAXIMUM TORQUE OF THE PTO GEARBOX (Output side daNm)	N1 TRACTOR OUTPUT SPEED RPM	N2 FINAL OUTPUT SPEED OF PUMP/GEARBOX ASSEMBLY RPM	I RATIO OF SPEED INCREASE	KW MAX TRANSMITTABLE POWER	WEIGHT KG
93,4	46,6	540	540	1	45	18
96	32	540	810	1,5	45	18
96,8	24,2	540	1080	2	45	18
93,6	18	540	1408	2,5	45	18
97,8	16,3	540	1620	3	42	18
91,8	13,1	540	1836	3,5	45	18
95	12	540	2052	3,8	45	18
94,40	11,8	540	2160	4	45	18
94	9,8	540	2592	4,8	45	18

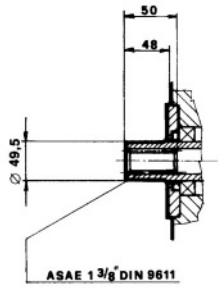

90002

FACTORY PREFIX
37

PTO GEARBOX
90001
90002
90003
90004
90005

RATIO AVAILABLE
1
1,5
2
2,5
3
3,5
3,8
4
4,8

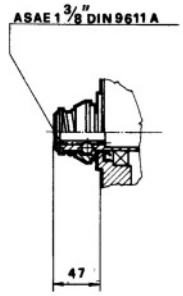

90003

PART NO.	DESCRIPTION OF PTO GEARBOX	PRICE
37 - 90001-1	Pto Gearbox gear gr.3/3,5 male shaft R.1:1 without Flange	£852.95
37 - 90001-2	Pto Gearbox gear gr.3/3,5 male shaft R.1:1,5 without Flange	£852.95
37 - 90001-3	Pto Gearbox gear gr.3/3,5 male shaft R.1:2 without Flange	£852.95
37 - 90001-4	Pto Gearbox gear gr.3/3,5 male shaft R.1:2,5 without Flange	£803.16
37 - 90001-5	Pto Gearbox gear gr.3/3,5 male shaft R.1:3 without Flange	£803.16
37 - 90001-6	Pto Gearbox gear gr.3/3,5 male shaft R.1:3,5 without Flange	£864.75
37 - 90001-7	Pto Gearbox gear gr.3/3,5 male shaft R.1:3,8 without Flange	£864.75
37 - 90001-8	Pto Gearbox gear gr.3/3,5 male shaft R.1:4 without Flange	£884.39
37 - 90001-8/SKF	Pto Gearbox gear gr.3/3,5 male shaft R.1:4 without Flange with be PZ	£884.39
37 - 90001-9	Pto Gearbox gear gr.3/3,5 male shaft R.1:4,8 without Flange	£884.39
37 - 90002-1	Pto Gearbox gear gr.3/3,5 female shaft long R.1:1 without Flange	£852.94
37 - 90002-2	Pto Gearbox gear gr.3/3,5 female shaft long R.1:1,5 w ithout Flange	£852.94
37 - 90002-3	Pto Gearbox gear gr.3/3,5 female shaft long R.1:2 without Flange	£852.94
37 - 90002-4	Pto Gearbox gear gr.3/3,5 female shaft long R.1:2,5 without Flangeli	£803.16
37 - 90002-5	Pto Gearbox gear gr.3/3,5 female shaft long R.1:3 without Flange	£803.16
37 - 90002-6	Pto Gearbox gear gr.3/3,5 female shaft long R.1:3,5 without Flange	£864.75
37 - 90002-7	Pto Gearbox gear gr.3/3,5 female shaft long R.1:3,8 without Flange	£864.75
37 - 90002-8	Pto Gearbox gear gr.3/3,5 female shaft long R.1:4 without Flange	£884.39
37 - 90002-9	Pto Gearbox gear gr.3/3,5 female shaft long R.1:4,8 without Flange	£907.29
37 - 90003-1	Pto Gearbox gear gr.3/3,5 female shaft quick-fitting R.1:1 without flange	£881.77
37 - 90003-2	Pto Gearbox gear gr.3/3,5 female shaft quick-fitting R.1:1,5 without flange	£881.77
37 - 90003-3	Pto Gearbox gear gr.3/3,5 female shaft quick-fitting R.1:2 without flange	£881.77
37 - 90003-4	Pto Gearbox gear gr.3/3,5 female shaft quick-fitting R.1:2,5 without flange	£881.77
37 - 90003-5	Pto Gearbox gear gr.3/3,5 female shaft quick-fitting R.1:3 without flange	£825.43
37 - 90003-6	Pto Gearbox gear gr.3/3,5 female shaft quick-fitting R.1:3,5 without flange	£825.43
37 - 90003-7	Pto Gearbox gear gr.3/3,5 female shaft quick-fitting R.1:3,8 without flange	£893.56
37 - 90003-8	Pto Gearbox gear gr.3/3,5 female shaft quick-fitting R.1:4 without flange	£911.92
37 - 90003-9	Pto Gearbox gear gr.3/3,5 female shaft quick-fitting R.1:4,8 without flange	£911.92
37 - 90005-1	Pto Gearbox gear gr.3/3,5 male shaft T23 R.1:1 without Flange	£911.92
37 - 90005-2	Pto Gearbox gear gr.3/3,5 male shaft T23 R.1:1,5 without Flange	£911.92
37 - 90005-3	Pto Gearbox gear gr.3/3,5 male shaft T23 R.1:2 without Flange	£911.92
37 - 90005-4	Pto Gearbox gear gr.3/3,5 male shaft T23 R.1:2,5 without Flange	£911.92
37 - 90005-5	Pto Gearbox gear gr.3/3,5 male shaft T23 R.1:3 without Flange	£911.92
37 - 90005-6	Pto Gearbox gear gr.3/3,5 male shaft T23 R.1:3,5 without Flange	£911.92
37 - 90005-7	Pto Gearbox gear gr.3/3,5 male shaft T23 R.1:3,8 without Flange	£931.56
37 - 90005-8	Pto Gearbox gear gr.3/3,5 male shaft T23 R.1:4 without Flange	£943.36
37 - 90005-9	Pto Gearbox gear gr.3/3,5 male shaft T23 R.1:4,8 without Flange	£943.36
If the part number needed is not listed please ask the Flowfit Sales Team		

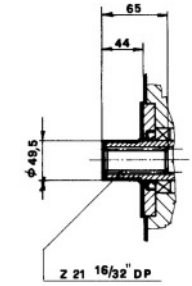

90004

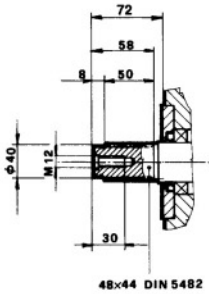

90005

50% OFF ALL PRICES

SERIES 91000 PTO GEARBOX DUAL PUMP GROUP 4 • 74KW

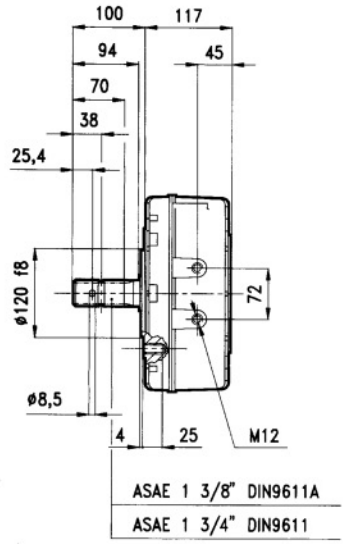

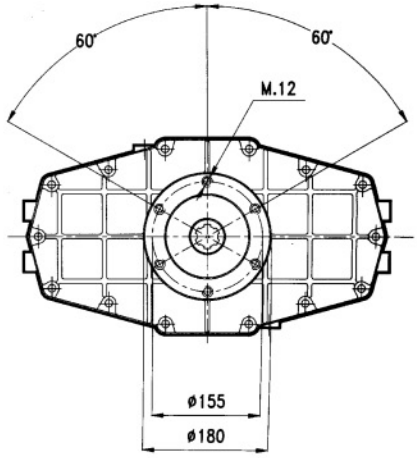

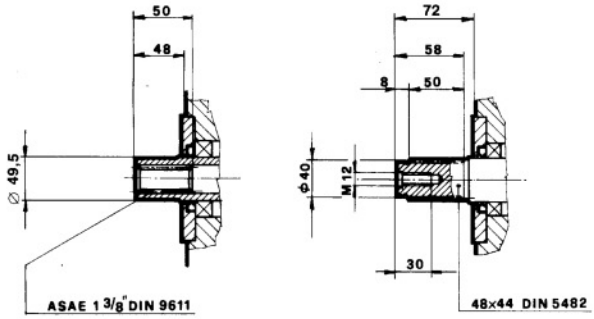

91002 91003

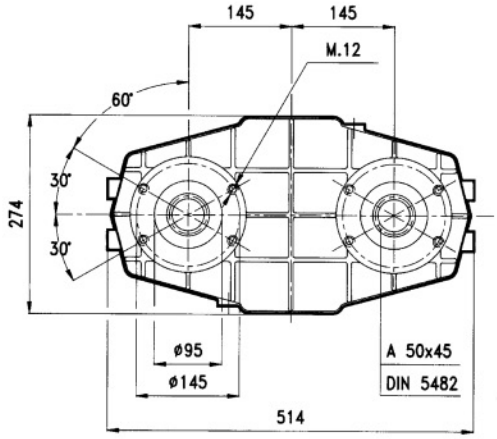

MAX OIL LEVEL 2 LITRE

M1 MAXIMUM CONTINUOUS TORQUE OF THE PTO GEARBOX (Input side daNm)	M2 MAXIMUM TORQUE OF THE PTO GEARBOX (Output side daNm)	N1 TRACTOR OUTPUT SPEED RPM	N2 FINAL OUTPUT SPEED OF PUMP/GEARBOX ASSEMBLY RPM	I RATIO OF SPEED INCREASE	KW MAX TRANSMITTABLE POWER	WEIGHT KG
132	66	540	540	1	74	20
158	52	540	810	1.5	74	20
163	39	540	1080	2	74	20
174	31	540	1350	2.5	74	20
177	27	540	1620	3	74	20
170	23	540	1836	3.5	74	20
158	20	540	2030	3.8	74	20

FACTORY PREFIX
70

PTO GEARBOX
91002
91003

RATIO AVAILABLE
1
1,5
2
2,5
3
3,5
3,8

PART NO.	DESCRIPTION OF PTO GEARBOX	PRICE
70 - 91002-1	Pto Gearbox gear gr.4 female shaft long R.1:1	£1,598.47
70 - 91002-2	Pto Gearbox gear gr.4 female shaft long R.1:1,5	£1,598.47
70 - 91002-3	Pto Gearbox gear gr.4 female shaft long R.1:2	£1,598.47
70 - 91002-4	Pto Gearbox gear gr.4 female shaft long R.1:2,5	£1,598.47
70 - 91002-5	Pto Gearbox gear gr.4 female shaft long R.1:3	£1,598.47
70 - 91002-6	Pto Gearbox gear gr.4 female shaft long R.1:3,5	£1,598.47
70 - 91002-7	Pto Gearbox gear gr.4 female shaft long R.1:3,8	£1,598.47
70 - 91003-1	Pto Gearbox gear gr.4 male shaft T23 R.1:1 without Flange	£1,598.47
70 - 91003-2	Pto Gearbox gear gr.4 male shaft T23 R.1:1,5 without Flange	£1,598.47
70 - 91003-3	Pto Gearbox gear gr.4 male shaft T23 R.1:2 without Flange	£1,598.47
70 - 91003-4	Pto Gearbox gear gr.4 male shaft T23 R.1:2,5 without Flange	£1,598.47
70 - 91003-5	Pto Gearbox gear gr.4 male shaft T23 R.1:3 without Flange	£1,598.47
70 - 91003-6	Pto Gearbox gear gr.4 male shaft T23 R.1:3,5 without Flange	£1,598.47
70 - 91003-7	Pto Gearbox gear gr.4 male shaft T23 R.1:3,8 without Flange	£1,598.47
If the part number needed is not listed please ask the Flowfit Sales Team		

FLANGES TO FIT PTO GEARBOXES 60000-70000-70012-8500

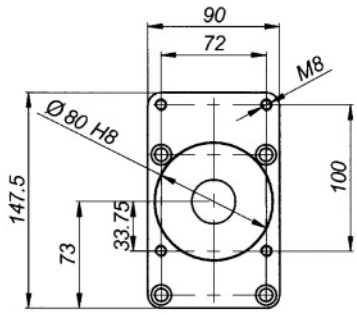

50100

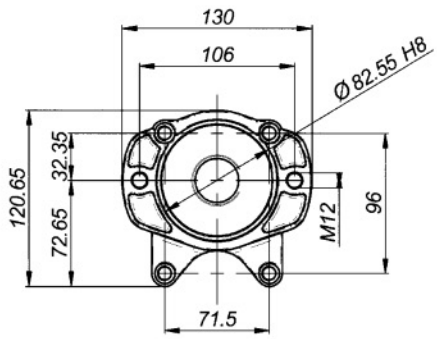

60100

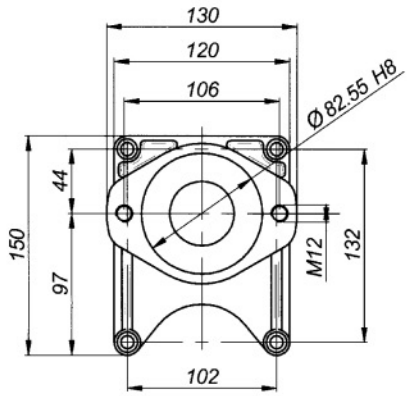

96100

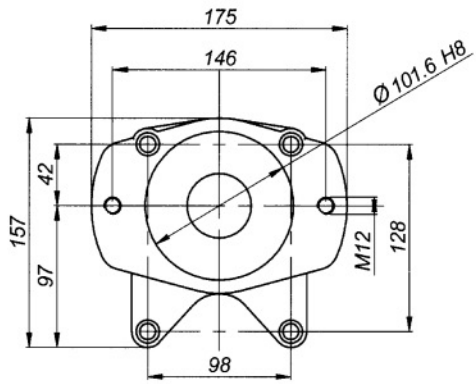

96101

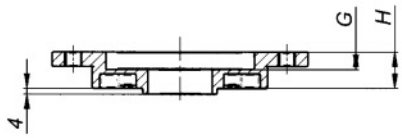

	FLANGE TYPES			
	Gr.2 BOSCH	*SAE A Gr.2*	*SAE A Gr.3*	*SAE B Gr.3*
Code	**50100**	**60100**	**96100**	**96101**
G	*8*	*12*	*10*	*12*
H	*13*	*32*	*16*	*24*

PART NO.	DESCRIPTION OF PTO GEARBOX	PRICE
60 – 60100	Flange Type SAE A PZ	£49.79
41 - 96100	Flange Type SAE A MP.3 CRT3+socket capscrews	£70.74
41 - 96101	Flange Type SAE B MP.3 CRT3+socket capscrews	£90.41
If the part number needed is not listed please ask the Flowfit Sales Team		

50% OFF ALL PRICES

FLANGES TO FIT PTO GEARBOXES 80000-90000-91000

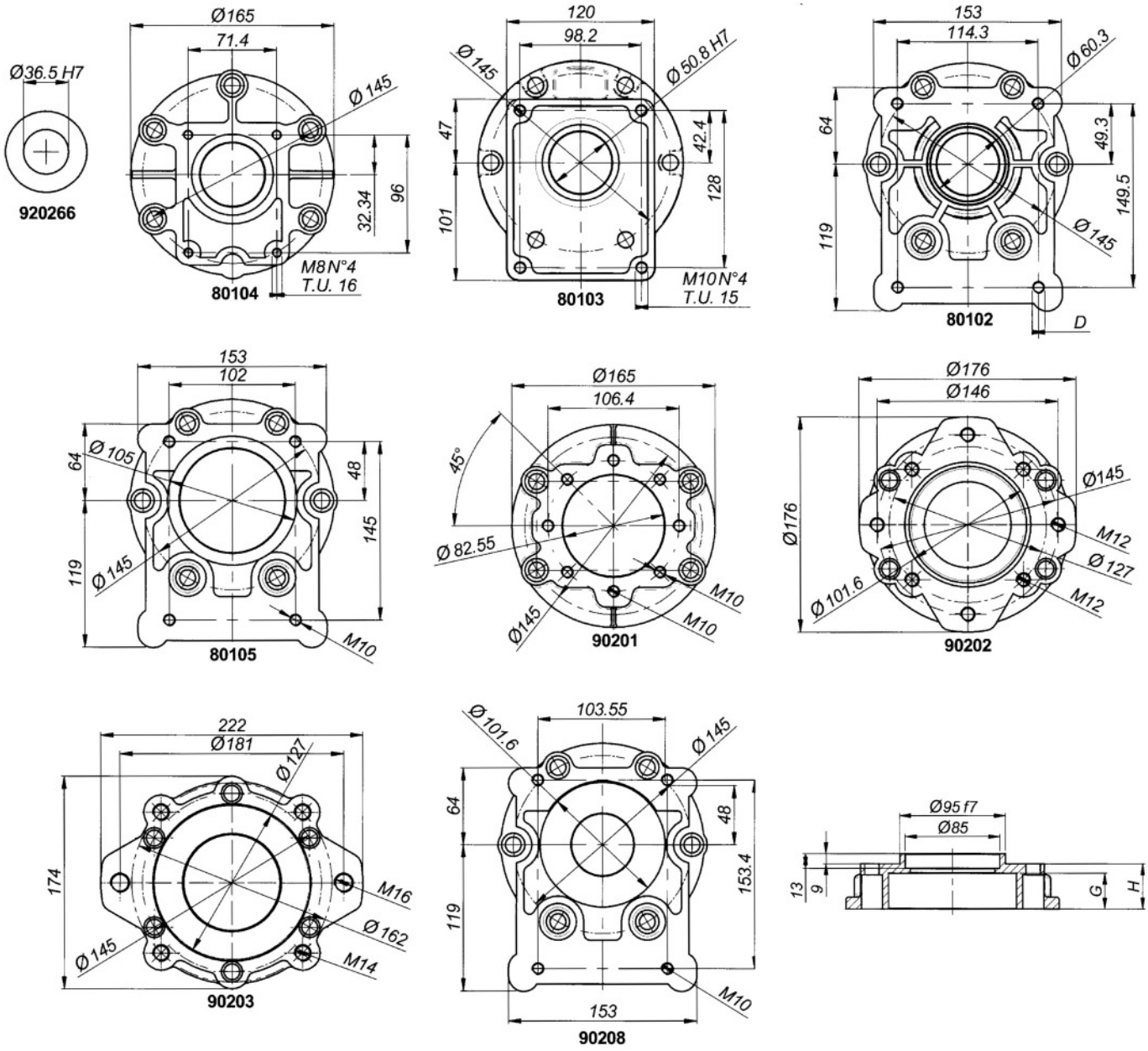

	FLANGE TYPES											
	Gr.2	Gr.3	Gr.3.5	Gr.4	Gr.3 Bosch	SAE A	SAE B	SAE C	L.G. 20-35	L.G.50	L.G.75	ULTRA 3PL DOWTY
Code.	**80104**	**80103**	**80102**	**80108**	**80105**	**90201**	**90202**	**90203**	**90205**	**90207**	**90209**	**90208**
G	21	22	24,5	36	12	25	12	15	20,5	33	57	10
H	21	22	24,5	36	24	25	25	28	26,5	43	72	24

PART NO.	DESCRIPTION OF PTO GEARBOX FLANGE ONLY	PRICE
42 – 80102	Flange gr.3,5 +socket capscrews	£85.16
42 - 80102/4	Flange gr.3,5 +socket capscrews for coupling gear GR4	£85.16
42 - 80103	Flange gr.3 +socket capscrews	£95.63
42 - 80103/4	Flange gr.3 +socket capscrews for coupling gear GR.4	£95.63
42 - 80104	Flange gr.2 +socket capscrews	£102.19
42 - 80104/4	Flange gr.2 +socket capscrews for coupling gear GR.4 PZ	£102.19
42 - 80105	Flange gr.3 BOSCH +socket capscrews	£121.84
43 - 90201	Flange SAE A +socket capscrews	£117.91
43 - 90201/4	Flange SAE A 4 holes +socket capscrews for coupling gear GR	£117.91
43 - 90202	Flange SAE B +socket capscrews	£115.30
43 - 90202/4	Flange SAE B +socket capscrews for coupling gear GR.4 PZ	£115.30
43 - 90203	Flange SAE C +socket capscrews	£117.91
43 - 90203/4	Flange SAE C +socket capscrews for coupling gear GR.4	£117.91
If the part number needed is not listed please ask the Flowfit Sales Team		

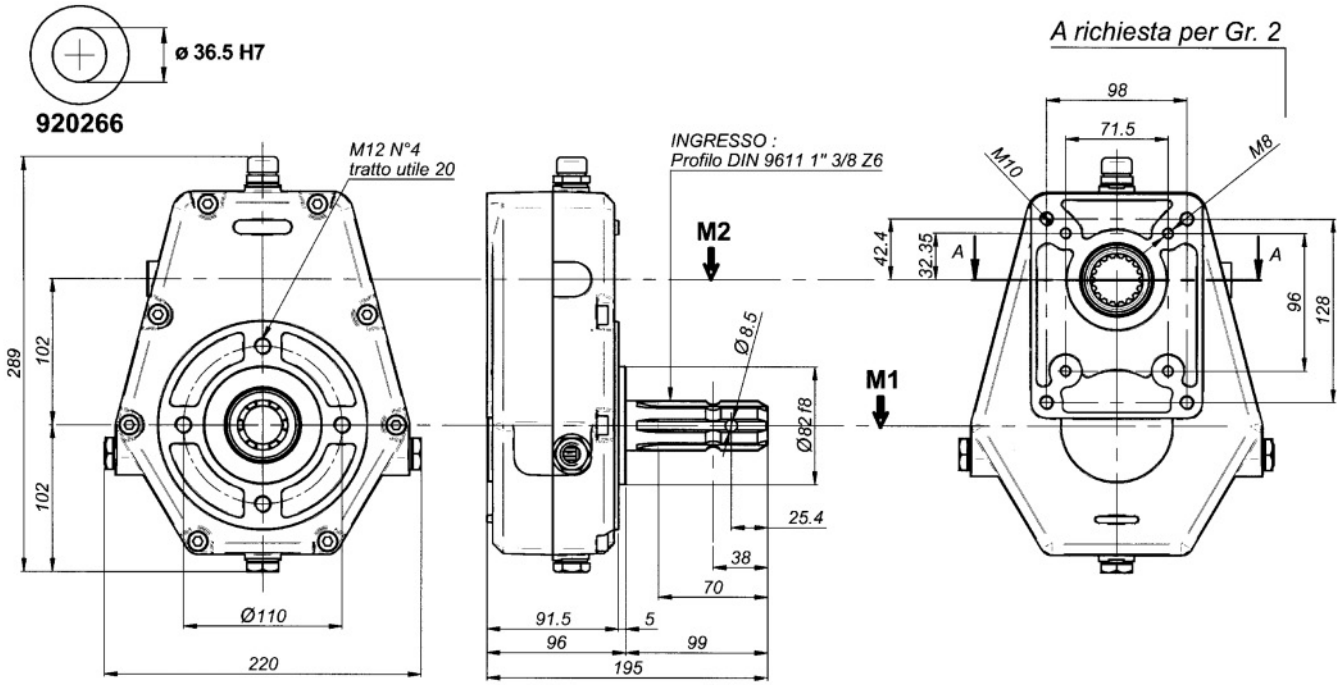

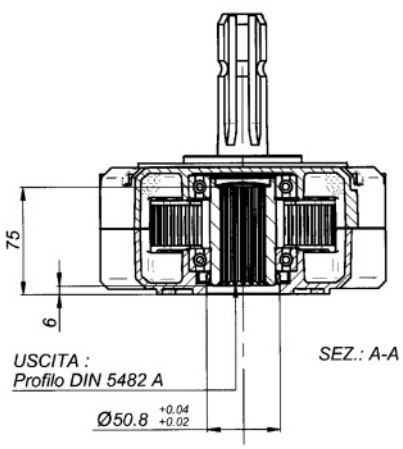

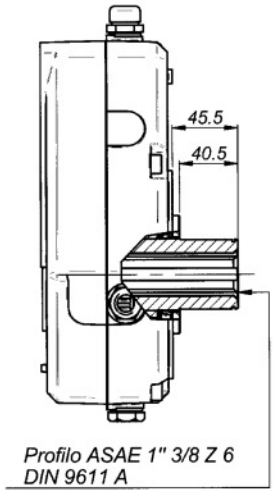

70013

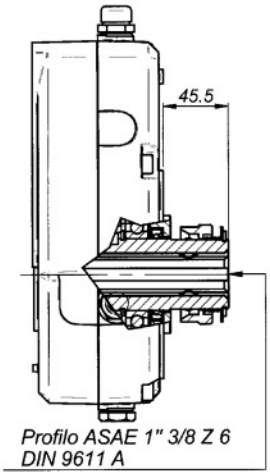

70015

MAX OIL LEVEL 0.52 LITRE

M1 MAXIMUM CONTINUOUS TORQUE OF THE PTO GEARBOX (Input side daNm)	M2 MAXIMUM TORQUE OF THE PTO GEARBOX (Output side daNm)	N1 TRACTOR OUTPUT SPEED RPM	N2 FINAL OUTPUT SPEED OF PUMP/GEARBOX ASSEMBLY RPM	I RATIO OF SPEED INCREASE	KW MAX TRANSMITTABLE POWER	WEIGHT KG
66	66	540	540	1	37	14.5
66	44	540	810	1.5	37	14.5
66	33	540	1080	2	37	14.5
66	26.4	540	1408	2.5	37	14.5
66	22	540	1620	3	37	14.5
66	18	540	1836	3.5	35	14.5
66	16.6	540	2057	3.8	35	14.5

FACTORY PREFIX
121

PTO GEARBOX
70012
70013
70015

RATIO AVAILABLE
1
1,5
2
2,5
3
3,5
3,8

PART NO.	DESCRIPTION OF PTO GEARBOX	PRICE
121-70012	PTO GEARBOX ANY RATIO MALE SHAFT 1 3/8" 6 SPLINE	£517.53
121-70013	PTO GEARBOX ANY RATIO FEMALE SHAFT 1 3/8" 6 SPLINE	£517.53
121-70015	PTO GEARBOX ANY RATIO FEMALE SHAFT 1 3/8" 6 SPLINE C/W QRC	£547.67
If the part number needed is not listed please ask the Flowfit Sales Team		

SERIES 97601 CAST IRON PTO GEARBOX PUMP SAE 'A' + SAE 'B' FLOWFIT

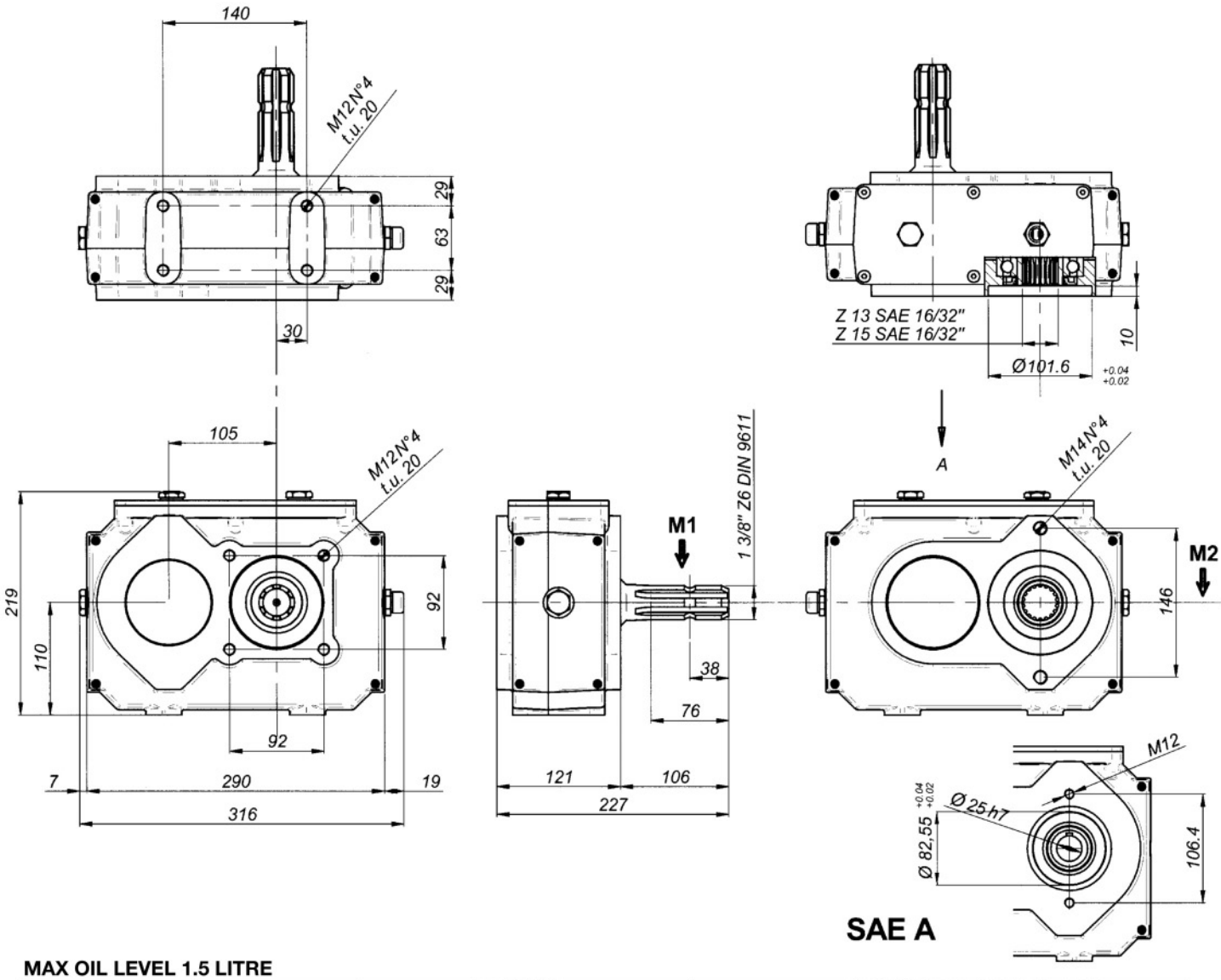

MAX OIL LEVEL 1.5 LITRE

M1 MAXIMUM CONTINUOUS TORQUE OF THE PTO GEARBOX (Input side daNm)	M2 MAXIMUM TORQUE OF THE PTO GEARBOX (Output side daNm)	N1 TRACTOR OUTPUT SPEED RPM	N2 FINAL OUTPUT SPEED OF PUMP/GEARBOX ASSEMBLY RPM	I RATIO OF SPEED INCREASE	KW MAX TRANSMITTABLE POWER	WEIGHT KG
58	58	200	200	1	68	16
82.5	55	200	300	1.5	68	16
98	49	200	400	2	68	16
112.5	45	200	500	2.5	68	16
132	44	200	600	3	68	16
112.5	35	200	680	3.5	68	16
110.2	29	200	760	3.8	68	16

FACTORY PREFIX
**

PTO GEARBOX
97601

RATIO AVAILABLE
1
1,5
2
2,5
3
3,5
3,8

PART NO.	DESCRIPTION OF PTO GEARBOX	PRICE
97601	PTO GEARBOX 1 3/8" 6 SPLINE MALE ANY RATIO	£805.78
	If the part number needed is not listed please ask the Flowfit Sales Team	

SERIES 97701 CAST IRON PTO GEARBOX PUMP GROUP 2 + GROUP 3 FLOWFIT

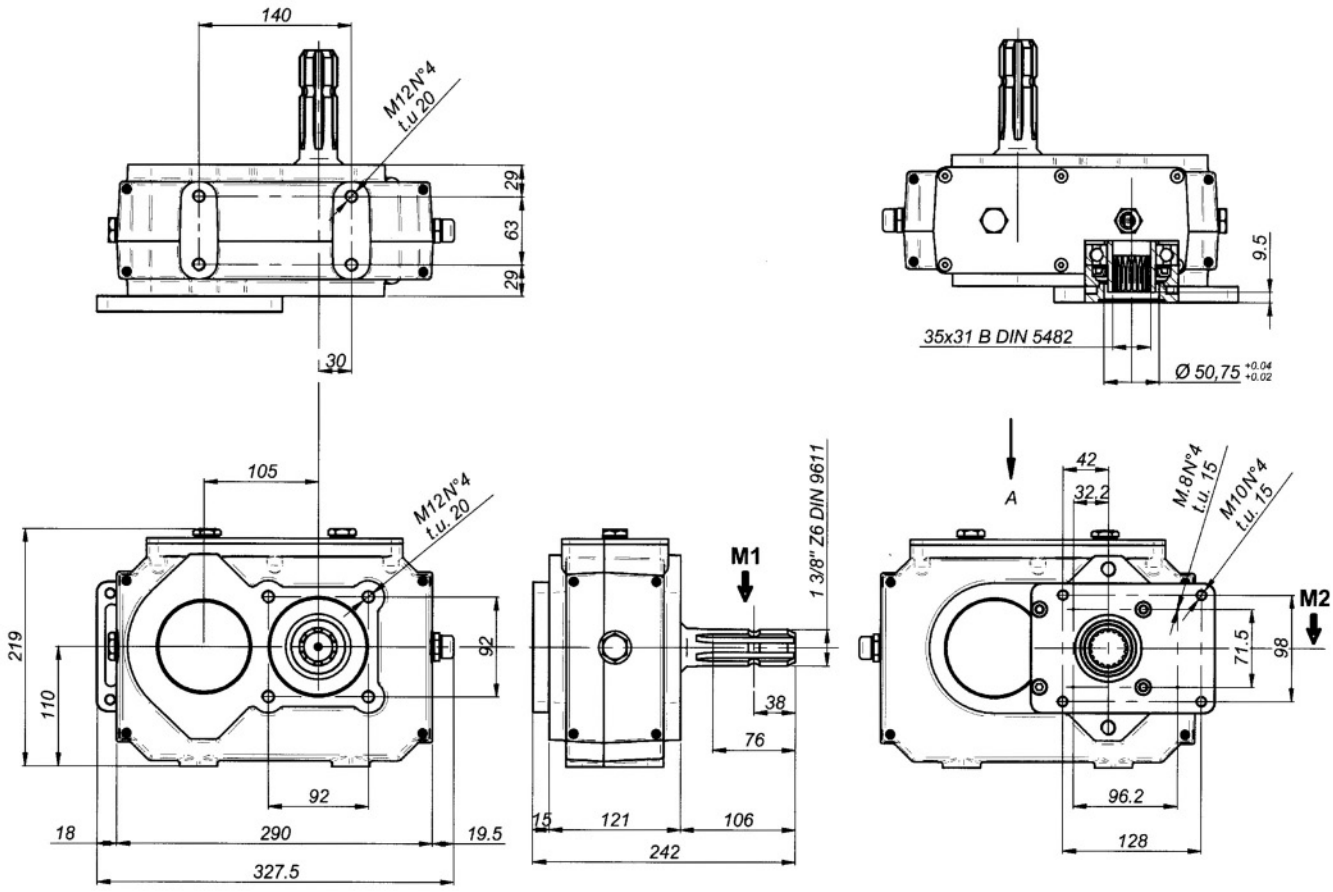

MAX OIL LEVEL 1.5 LITRE

M1 MAXIMUM CONTINUOUS TORQUE OF THE PTO GEARBOX (Input side daNm)	M2 MAXIMUM TORQUE OF THE PTO GEARBOX (Output side daNm)	N1 TRACTOR OUTPUT SPEED RPM	N2 FINAL OUTPUT SPEED OF PUMP/GEARBOX ASSEMBLY RPM	I RATIO OF SPEED INCREASE	KW MAX TRANSMITTABLE POWER	WEIGHT KG
58	58	200	200	1	68	16
82.5	55	200	300	1.5	68	16
98	49	200	400	2	68	16
112.5	45	200	500	2.5	68	16
132	44	200	600	3	68	16
112.5	35	200	680	3.5	68	16
110.2	29	200	760	3.8	68	16

FACTORY PREFIX	PTO GEARBOX
121	97701

RATIO AVAILABLE
1
1,5
2
2,5
3
3,5
3,8

PART NO.	DESCRIPTION OF PTO GEARBOX	PRICE
97701-6	Pto Gearbox M7 in cast iron R.1:3,8 Male shaft with pinion	£936.81
If the part number needed is not listed please ask the Flowfit Sales Team		

50% OFF ALL PRICES

HYDRAULIC PTO GEARBOXES AND PUMP ASSEMBLIES

PTO GEAR BOXES WITH GROUP 2 PUMPS 466
PTO GEAR BOXES WITH GROUP 3 PUMPS 466
CAST IRON PTO GEAR BOXES WITH GROUP 3 PUMPS 467

FLOWFIT

ALUMINIUM HYDRAULIC PTO GEARBOXES AND PUMP ASSEMBLIES

FLOWFIT

Flowfit PTO gearbox and pump assemblies are ideal for adding power to tractor and landscape equipment not already equipped with hydraulic circuits. Use to power hydraulic motors front end loaders, mowers and rotary sweepers.
The gearbox & pump range offer either direct or remote mounted options to the tractor PTO to provide independent hydraulic service.

PTO GEAR BOXES WITH GROUP 2 PUMPS

With standard ratio's of 1:3.0 and 1: 3.8 and a range of outputs available upon request.
Flows from 6.48 l/min to 53.35 l/min can be achieved when coupled with group 2 hydraulic pump

Please note : Higher pressure and higher flow combinations are available upon request.
Please check intermittant and peak pressures on pump pdf.

PART NO.	FLOW L/MIN	MAX PRESSURE BAR	GEAR PUMP	GEARBOX RATIO	INPUT SHAFT	PRICE
ZZ001043	6.48	280	Group 2 4cc/rev	1:3	1 3/8"- 6" Spline Male	£408.48
ZZ001044	9.72	280	Group 2 6cc/rev	1:3	1 3/8"- 6" Spline Male	£408.48
ZZ001046	13.77	280	Group 2 8.5cc/rev	1:3	1 3/8"- 6" Spline Male	£408.48
ZZ001047	17.82	280	Group 2 11cc/rev	1:3	1 3/8"- 6" Spline Male	£414.64
ZZ001048	22.68	220	Group 2 14cc/rev	1:3	1 3/8"- 6" Spline Male	£414.64
ZZ001049	26.73	190	Group 2 16.5cc/rev	1:3	1 3/8"- 6" Spline Male	£414.64
ZZ001050	31.59	160	Group 2 19.5cc/rev	1:3	1 3/8"- 6" Spline Male	£421.58
ZZ001051	36.45	135	Group 2 22.5cc/rev	1:3	1 3/8"- 6" Spline Male	£421.58
ZZ001052	42.12	120	Group 2 26cc/rev	1:3	1 3/8"- 6" Spline Male	£426.98
ZZ001053	8.21	280	Group 2 4cc/rev	1:3.8	1 3/8"- 6" Spline Male	£408.48
ZZ001054	12.31	280	Group 2 6cc/rev	1:3.8	1 3/8"- 6" Spline Male	£408.48
ZZ001055	17.55	280	Group 2 8.5cc/rev	1:3.8	1 3/8"- 6" Spline Male	£408.48
ZZ001056	22.57	220	Group 2 11cc/rev	1:3.8	1 3/8"- 6" Spline Male	£414.64
ZZ001057	28.73	170	Group 2 14cc/rev	1:3.8	1 3/8"- 6" Spline Male	£414.64
ZZ001058	33.86	150	Group 2 16.5cc/rev	1:3.8	1 3/8"- 6" Spline Male	£414.64
ZZ001059	40.01	125	Group 2 19.5cc/rev	1:3.8	1 3/8"- 6" Spline Male	£421.58
ZZ001060	46.17	110	Group 2 22.5cc/rev	1:3.8	1 3/8"- 6" Spline Male	£421.58
ZZ001061	53.35	95	Group 2 26cc/rev	1:3.8	1 3/8"- 6" Spline Male	£426.98

PTO GEAR BOXES WITH GROUP 3 PUMPS

With standard ratio's of 1:3.0 and 1: 3.5 and a range of outputs available upon request.
Flows from 30.78 l/min to 115 l/min can be achieved when coupled with group 3 hydraulic pump

Please note : Higher pressure and higher flow combinations are available upon request.
Please check intermittant and peak pressures on pump pdf.

PART NO.	FLOW L/MIN	MAX PRESSURE BAR	GEAR PUMP	GEARBOX RATIO	INPUT SHAFT	PRICE
ZZ000480	30.78	250	group 3 19cc/rev	1:3	1 3/8"- 6" Spline Male	£645.43
ZZ000488	35.91	250	group 3 19cc/rev	1:3.5	1 3/8"- 6" Spline Male	£645.43
ZZ000481	36.12	240	group 3 22cc/rev	1:3	1 3/8"- 6" Spline Male	£645.43
ZZ000489	42.15	240	group 3 22cc/rev	1:3.5	1 3/8"- 6" Spline Male	£645.43
ZZ000483	53.29	190	group 3 33cc/rev	1:3	1 3/8"- 6" Spline Male	£657.49
ZZ000490	55.38	180	group 3 29cc rev	1:3.5	1 3/8"- 6" Spline Male	£657.49
ZZ000484	58.96	170	group 3 36cc/rev	1:3	1 3/8"- 6" Spline Male	£657.49
ZZ000491	62.18	160	group 3 33cc/rev	1:3.5	1 3/8"- 6" Spline Male	£657.49
ZZ000492	68.8	140	group 3 36cc/rev	1:3.5	1 3/8"- 6" Spline Male	£657.49
ZZ000485	70.47	140	group 3 44cc/rev	1:3	1 3/8"- 6" Spline Male	£669.57
ZZ000493	82.22	120	group 3 44cc/rev	1:3.5	1 3/8"- 6" Spline Male	£664.76
ZZ000486	83.75	120	group 3 52cc/rev	1:3	1 3/8"- 6" Spline Male	£664.76
ZZ000494	97.71	100	group 3 52cc/rev	1:3.5	1 3/8"- 6" Spline Male	£664.76
ZZ000487	98.98	100	group 3 62cc/rev	1:3	1 3/8"- 6" Spline Male	£689.92
ZZ000495	115.48	80	group 3 62cc/rev	1:3.5	1 3/8"- 6" Spline Male	£689.92

CAST IRON PTO GEAR BOXES WITH GROUP 3 PUMPS

With standard ratio's of 1:3.0 and 1: 3.5 and a range of outputs available upon request.
Flows from 6l/min to 120 l/min can be achievedwhen coupled with group 3 hydraulic pump

Please note : Higher pressure and higher flow combinations are available upon request.
Please check intermittant and peak pressures on pump pdf.

PART NO.	FLOW L/MIN	MAX PRESSURE BAR	GEAR PUMP	GEARBOX RATIO	INPUT SHAFT	PRICE
ZZ000618	35.91	250	group 3 19cc/rev	1:3.5	1 3/8"- 6" Spline Male	£927.55
ZZ000610	36.126	240	group 3 22.3cc/rev	1:3	1 3/8"- 6" Spline Male	£927.55
ZZ000619	42.15	240	group 3 22.3cc/rev	1:3.5	1 3/8"- 6" Spline Male	£927.55
ZZ000611	47.466	220	group3 29.3cc/rev	1:3	1 3/8"- 6" Spline Male	£939.61
ZZ000612	53.298	220	group 3 32.9cc/rev	1:1.3	1 3/8"- 6" Spline Male	£939.61
ZZ000620	55.38	220	group 3 29.3cc/rev	1:3.5	1 3/8"- 6" Spline Male	£939.61
ZZ000613	58.968	210	group 3 36.4cc/rev	1:3	1 3/8"- 6" Spline Male	£939.61
ZZ000621	62.18	220	group 3 32.9cc/rev	1:3.5	1 3/8"- 6" Spline Male	£939.61
ZZ000622	68.8	210	group 3 36.4 cc/rev	1:3.5	1 3/8"- 6" Spline Male	£939.61
ZZ000614	70.47	200	group 3 43.5 cc/rev	1:3	1 3/8"- 6" Spline Male	£951.68
ZZ000623	82.22	200	group 3 43.5 cc/rev	1:3.5	1 3/8"- 6" Spline Male	£951.68
ZZ000624	97	180	group 3 51.7cc/rev	1:3.5	1 3/8"- 6" Spline Male	£951.68
ZZ000616	98.98	180	group 3 61.1cc/rev	1:3	1 3/8"- 6" Spline Male	£972.04
ZZ000625	115.48	150	group 3 61.1cc/rev	1:3.5	1 3/8"- 6" Spline Male	£972.04

ELECTROMAGNETIC CLUTCHES

10 daNm ELECTROMAGNETIC CLUTCHES.....469
FLANGES FOR 10 daNm ELECTROMAGNETIC CLUTCHES.....470
10 daNm ELECTROMAGNETIC CLUTCHES.....471
FLANGES FOR 10 daNm ELECTROMAGNETIC CLUTCHES.....472
14 daNm ELECTROMAGNETIC CLUTCHES.....473
FLANGES FOR 14 daNm ELECTROMAGNETIC CLUTCHES.....474
14 daNm ELECTROMAGNETIC CLUTCHES.....475
FLANGES FOR 14 daNm ELECTROMAGNETIC CLUTCHES.....476
21 daNm ELECTROMAGNETIC CLUTCHES.....477
FLANGES FOR 21 daNm ELECTROMAGNETIC CLUTCHES.....478
50 daNm ELECTROMAGNETIC CLUTCHES.....479
FLANGES FOR 50 daNm ELECTROMAGNETIC CLUTCHES.....480

The most powerful range in the uk up to 60 danm off the shelf.

Brand new electromagnetic clutch and pump assemblies are commonly used in marine, agricultural, offroad and general industrial applications such as remote hydraulics in service trucks, boats, trucks with automatic transmissions,fram tractors and snow ploughs.

During assembly please make sure there is no oil or grease traces on the pulley surfaces which must be completely dry and clean.

Running in of the full range of electromagnetic clutches is required to obtain the desired rated torque value. Running in is carried out by engaging and disengaging clutch at high speed several times with the pump in the unload position.

When assembling the electromagnetic clutches with any front driving flange please check for correct coupling alignment,but do not exceed rated torque because this would cause slippage of the contact surface where the belts are located. This stage must not last more than 5 seconds as coils within the clutch will burn out.

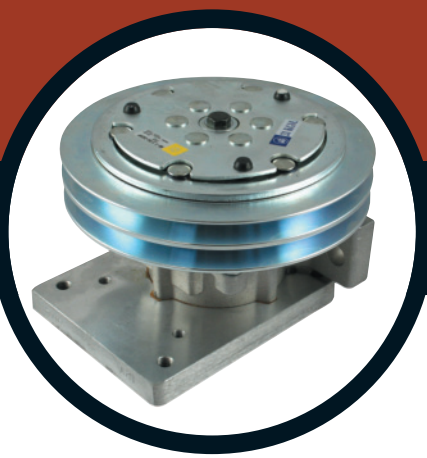

FLOWFIT

50% OFF ALL PRICES

10 daNm ELECTROMAGNETIC CLUTCHES

SERIE: 30901 12 Volt

SERIE: 30903 24 Volt

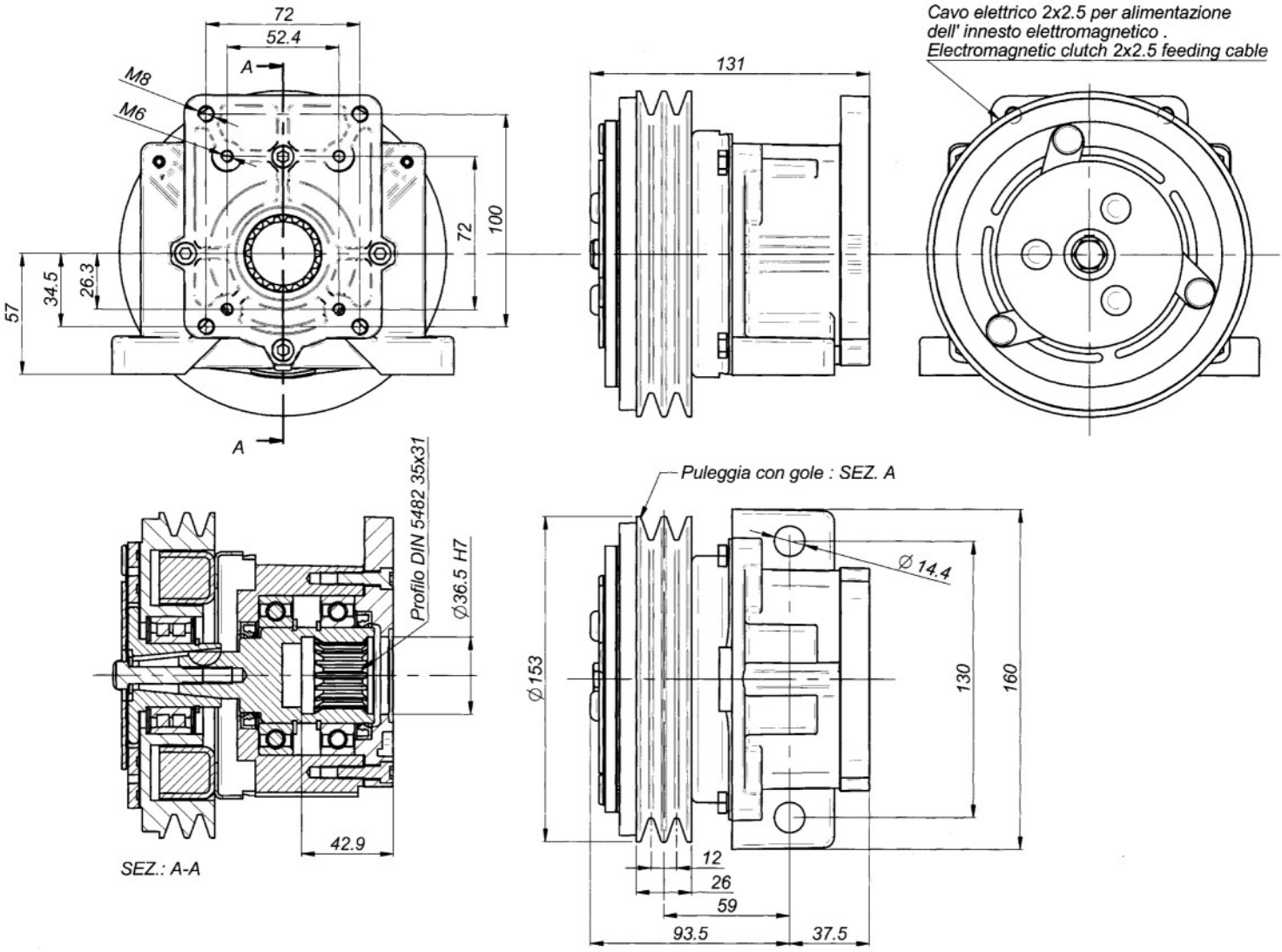

Nominal torque	7,8 daNm		Connection time	25 m/sec
Static torque	12,5 daNm		Disconnection time	40 m/sec
Dynamic torque	8,5 daNm	at 500 rpm	Minimun time between two connection	20 sec
	7,0 daNm	at 1000 rpm		
	4,2 daNm	at 1500 rpm		
	3,5 daNm	at 2000 rpm		
	2,7 daNm	at 2500 rpm	Max speed	5000 rpm
	2,5 daNm	at 3000 rpm	Weight	5,5 Kg

Electric absorption	Resistance (Ω)		Current (A)		Power (W)	
	20° C	120° C	20° C	120° C	20° C	120° C
12 V DC	4,00	5,60	3,33	2,00	40,00	24,00
24 V DC	20,00	28,00	1,26	0,77	30,30	18,18

All technical data are at 20°C / at 120 °C the performance are less 20%
All electromagneteic clutches are reversible.

PART NO.	DESCRIPTION	PRICE
29 – 30901	Electromagnetic clutch 12V. 10 Kgm. Fl.1/2	£448.08
29 - 30903	Electromagnetic clutch 24V. 10 Kgm. Fl.1/2	£448.08
29 - 30903/SA	Electromagnetic clutch 24V. 10 Kgm. Fl. SAE A	£448.08
29 - 30909	Electromagnetic clutch 12V. 10 Kgm. Fl.3	£448.08
29 – 30911	Electromagnetic clutch 24V. 10 Kgm. Fl.3	£448.08
29 - 30917	Electromagnetic clutch 12V. 10 Kgm. Fl. 2 Bosch	£448.08
29 - 30919	Electromagnetic clutch 24V. 10 Kgm. Fl. 2 Bosch	£448.08
29 – 30925	Electromagnetic clutch 12V. 10 Kgm. Fl. 3 Bosch	£448.08
29 - 30927	Electromagnetic clutch 24V. 10 Kgm. Fl. 3 Bosch	£448.08
If the part number needed is not listed please ask the Flowfit Sales Team		

FLANGES FOR 10 daNm ELECTROMAGNETIC CLUTCHES

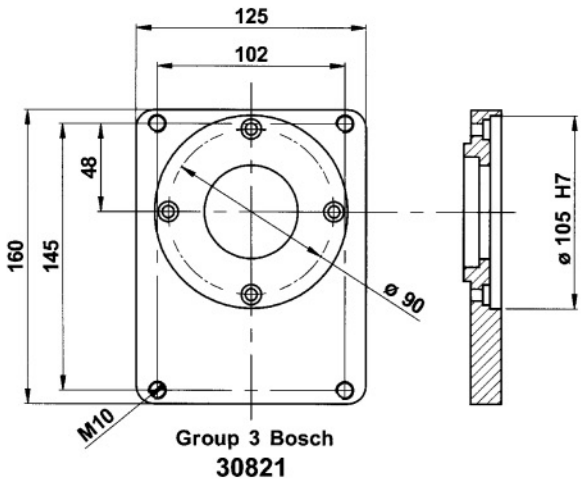

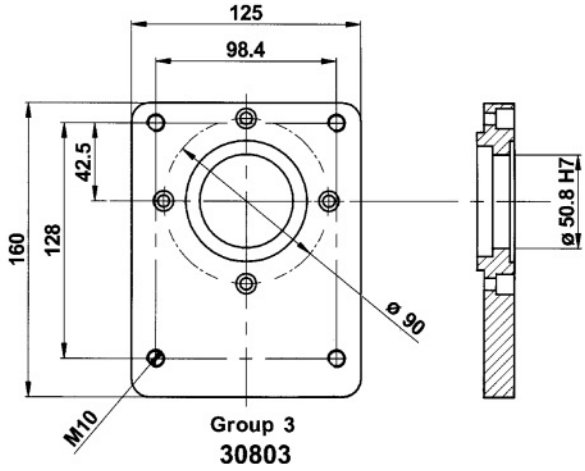

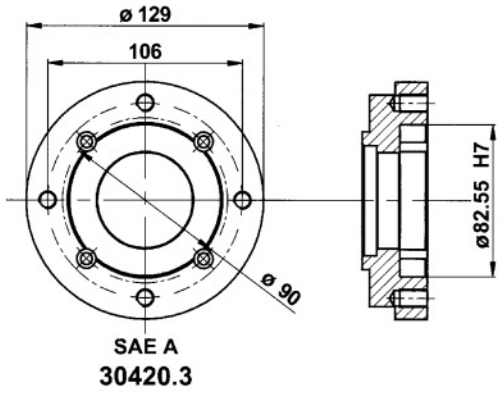

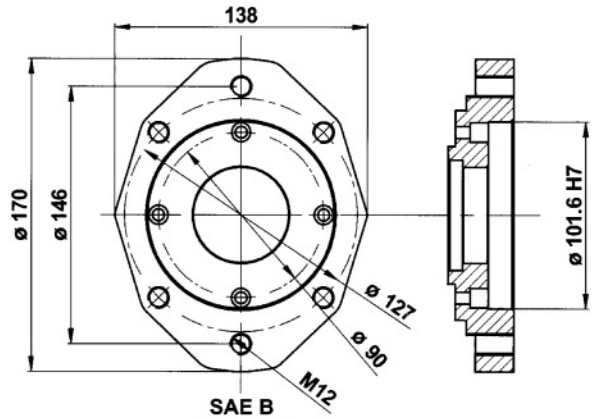

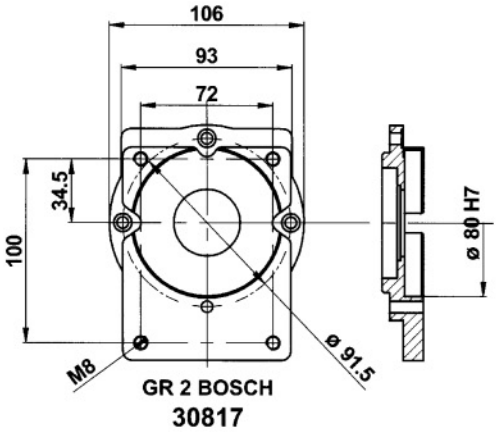

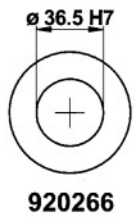

Electric absorption	CLUTCHES COMPLETE WITH ABOVE FLANGES				
	Gr.2 BOSCH	Gr.3	Gr. 3 BOSCH	SAE A	SAE B
12 Volt	30917	30909	30925	30901/SA	30901/SB
24 Volt	30919	30911	30927	30903/SA	30903/SB

50% OFF ALL PRICES

10 daNm ELECTROMAGNETIC CLUTCHES

SERIES: 30901-1 12 Volt

SERIES: 30903-1 24 Volt

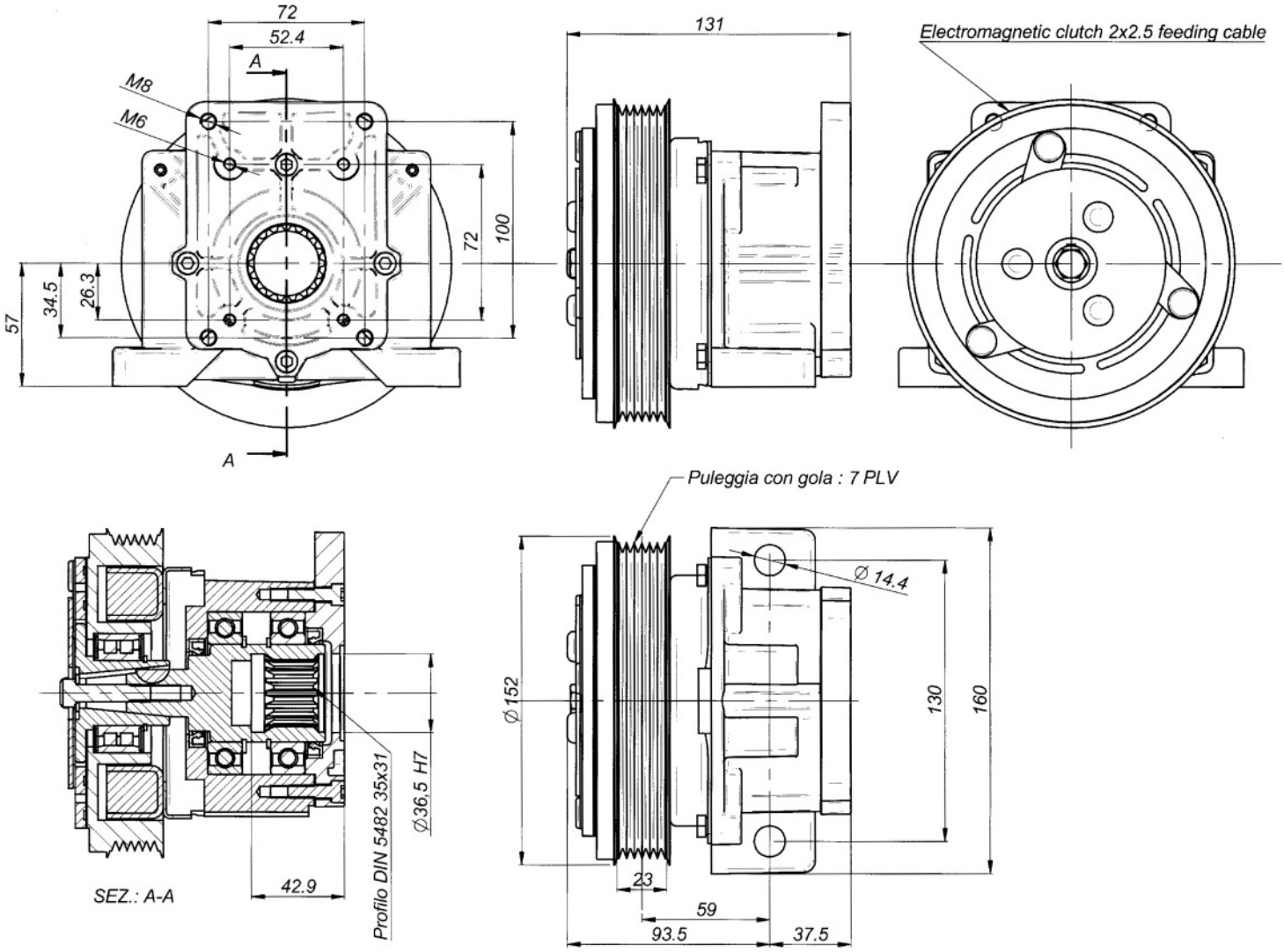

Nominal torque	7,8 daNm		Connection time	25 m/sec
Static torque	12,5 daNm		Disconnection time	40 m/sec
Dynamic torque	8,5 daNm	at 500 rpm	Minimun time between two connection	20 sec
	7,0 daNm	at 1000 rpm		
	4,2 daNm	at 1500 rpm		
	3,5 daNm	at 2000 rpm		
	2,7 daNm	at 2500 rpm	Max speed	5000 rpm
	2,5 daNm	at 3000 rpm	Weight	5,5 Kg

Electric absorption	Resistance (Ω)		Current (A)		Power (W)	
	20° C	120° C	20° C	120° C	20° C	120° C
12 V DC	4,00	5,60	3,33	2,00	40,00	24,00
24 V DC	20,00	28,00	1,26	0,77	30,30	18,18

All technical data are at 20°C / at 120 °C the performance are less 20%
All electromagneteic clutches are reversible.

PART NO.	DESCRIPTION	PRICE
29 – 30901 - 1/7	Electromagnetic clutch 12V. 10 Kgm. Fl.1/2 7 PLY RIBBED	£448.08
29 - 30903 - 1	Electromagnetic clutch 24V. 10 Kgm. Fl.1/2	£448.08
29 - 30903 - 1/SA	Electromagnetic clutch 24V. 10 Kgm. Fl. SAE A	£448.08
29 - 30909 - 1	Electromagnetic clutch 12V. 10 Kgm. Fl.3	£448.08
29 – 30911 - 1	Electromagnetic clutch 24V. 10 Kgm. Fl.3	£448.08
29 - 30917 - 1	Electromagnetic clutch 12V. 10 Kgm. Fl. 2 Bosch	£448.08
29 - 30919 - 1	Electromagnetic clutch 24V. 10 Kgm. Fl. 2 Bosch	£448.08
29 – 30925 - 1	Electromagnetic clutch 12V. 10 Kgm. Fl. 3 Bosch	£448.08
29 - 30927 - 1	Electromagnetic clutch 24V. 10 Kgm. Fl. 3 Bosch	£448.08
If the part number needed is not listed please ask the Flowfit Sales Team		

FLANGES FOR 10 daNm ELECTROMAGNETIC CLUTCHES

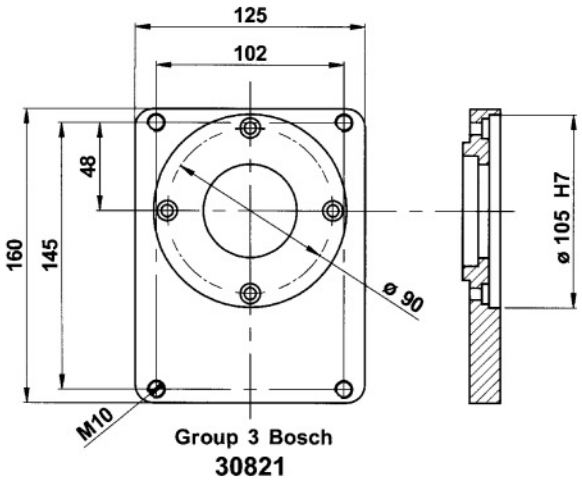

Group 3 Bosch
30821

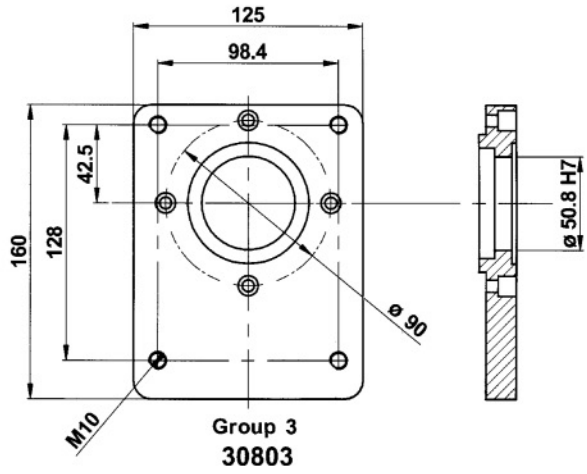

Group 3
30803

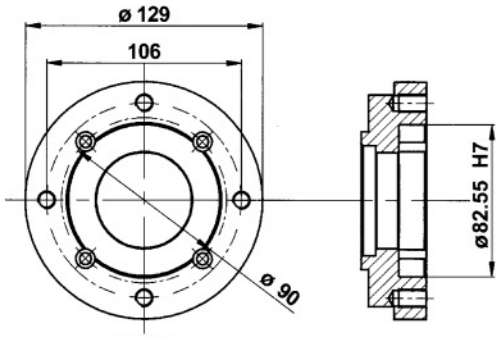

SAE A
30420.3

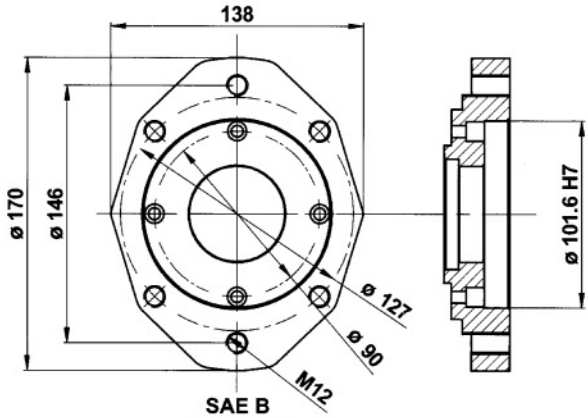

SAE B
30420.1

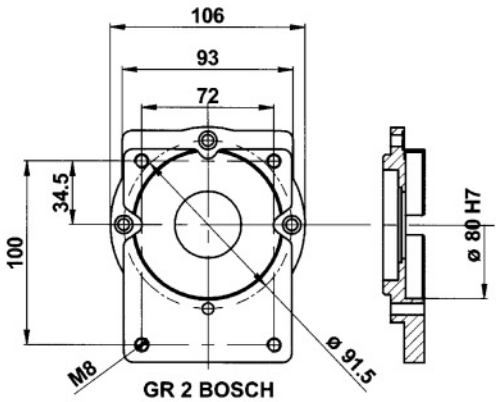

GR 2 BOSCH
30817

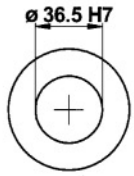

920266

Electric absorption	CLUTCHES COMPLETE WITH ABOVE FLANGES				
	Gr.2 BOSCH	Gr.3	Gr. 3 BOSCH	SAE A	SAE B
12 Volt	30917-1	30909-1	30925-1	30901-1/SA	30901-1/SB
24 Volt	30919-1	30911-1	30927-1	30903-1/SA	30903-1/SB

50% OFF ALL PRICES

14 daNm ELECTROMAGNETIC CLUTCHES

FLOWFIT

SERIE: 30929 12 Volt

SERIE: 30930 24 Volt

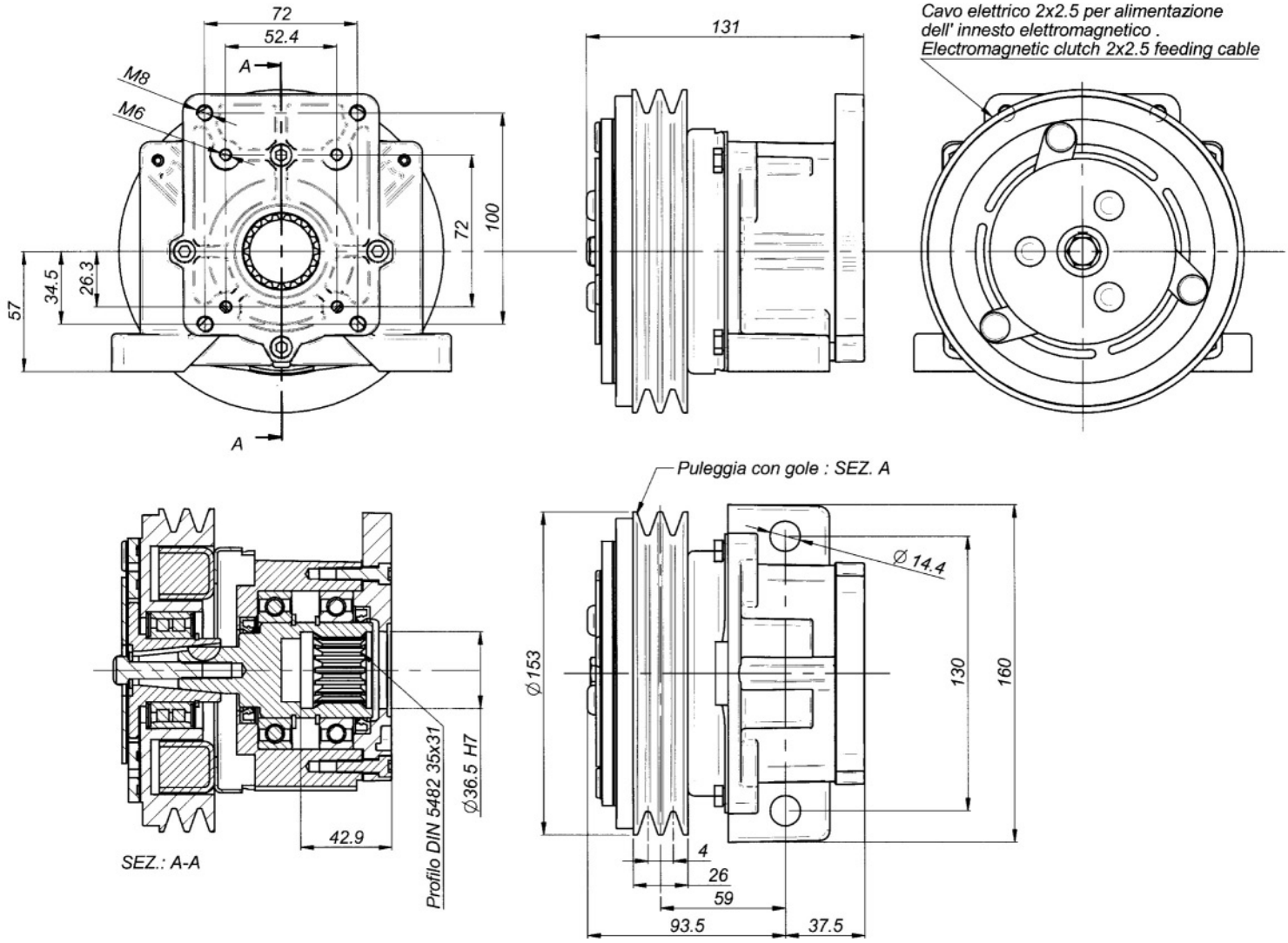

Nominal torque	**11,8 daNm**		**Connection time**	**25 m/sec**
Static torque	**14,0 daNm**		**Disconnection time**	**40 m/sec**
Dynamic torque	**12,5 daNm**	**at 500 rpm**	**Minimun time between two connection**	**20 sec**
	11,0 daNm	**at 1000 rpm**		
	8,2 daNm	**at 1500 rpm**		
	7,5 daNm	**at 2000 rpm**		
	6,7 daNm	**at 2500 rpm**	**Max speed**	**5000 rpm**
	6,5 daNm	**at 3000 rpm**	**Weight**	**5,5 Kg**

Electric absorption	**Resistance (Ω)**		**Current (A)**		**Power (W)**	
	20° C	**120° C**	**20° C**	**120° C**	**20° C**	**120° C**
12 V DC	**4,00**	**5,60**	**3,33**	**2,00**	**40,00**	**24,00**
24 V DC	**20,00**	**28,00**	**1,26**	**0,77**	**30,30**	**18,18**

All technical data are at 20°C / at 120 °C the performance are less 20%
All electromagneteic clutches are reversible.

PART NO.	DESCRIPTION	PRICE
29 - 30929	Electromagnetic clutch 12V. 14 Kgm. Fl.1/2	£501.80
29 - 30929/SA	Electromagnetic clutch 12V. 14 Kgm. Fl. SAE A	£543.73
29 - 30929/SB	Electromagnetic clutch 12V. 14 Kgm. Fl. SAE B	£543.73
29 - 30930	Electromagnetic clutch 24V. 14 Kgm. Fl.1/2	£501.80
29 - 30931	Electromagnetic clutch 12V. 14 Kgm. Fl.3	£547.67
29 – 30932	Electromagnetic clutch 24V. 14 Kgm. Fl.3	£547.67
If the part number needed is not listed please ask the Flowfit Sales Team		

FLANGES FOR 14 daNm ELECTROMAGNETIC CLUTCHES

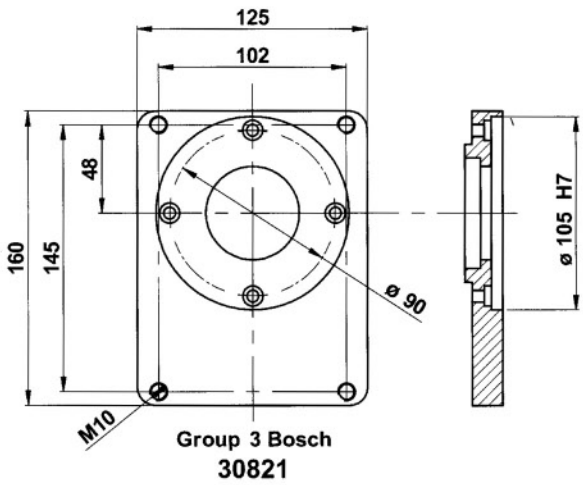

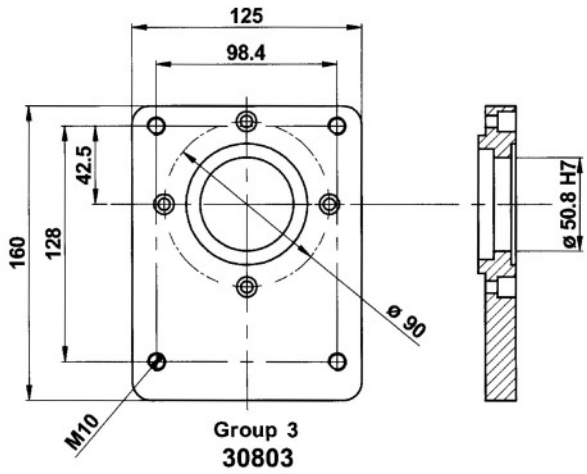

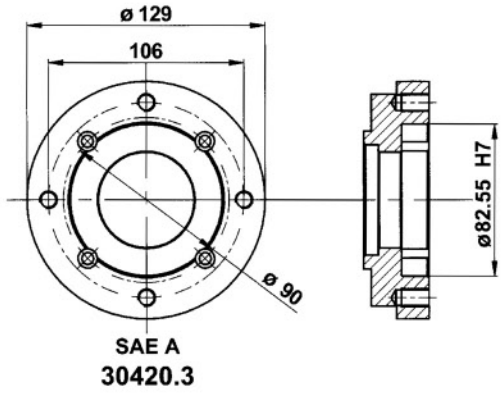

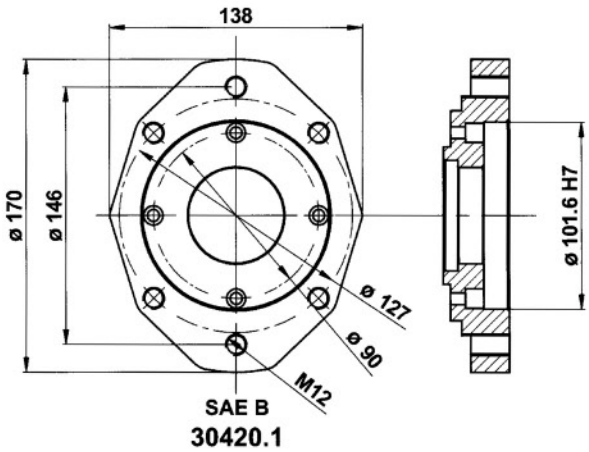

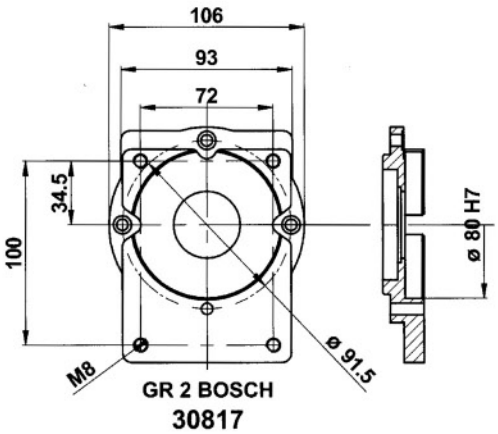

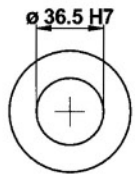

Electric absorption	CLUTCHES COMPLETE WITH ABOVE FLANGES				
	Gr.2 BOSCH	Gr.3	Gr. 3 BOSCH	SAE A	SAE B
12 Volt	30929/2B	30931	30931/3B	30929/SA	30929/SB
24 Volt	30930/2B	30932	30932/3B	30930/SA	30930/SB

14 daNm ELECTROMAGNETIC CLUTCHES

FLOWFIT

SERIES: 30929-1 12 Volt SERIES: 30930-1 24 Volt

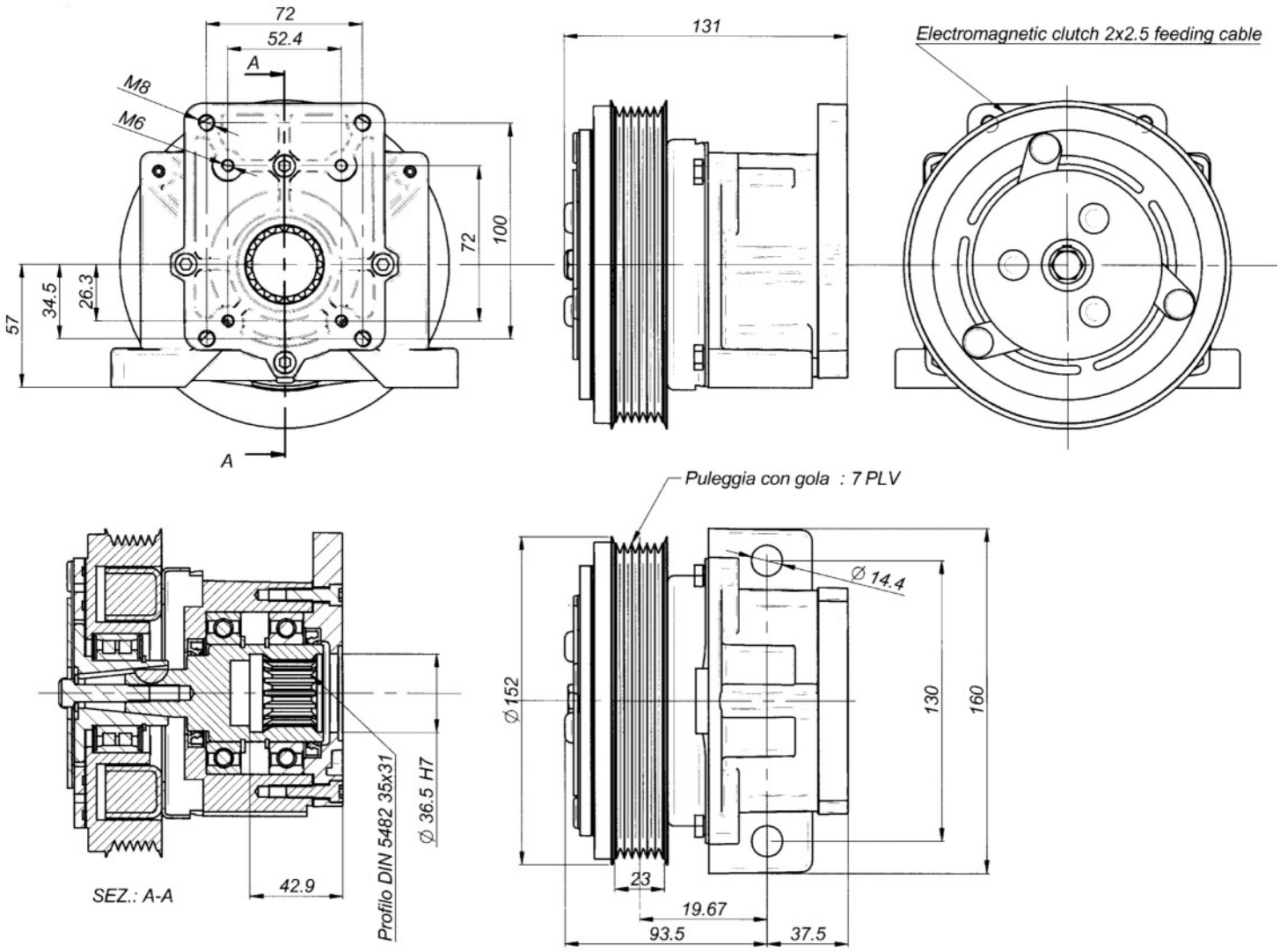

Nominal torque	11,8 daNm		Connection time	25 m/sec
Static torque	14,0 daNm		Disconnection time	40 m/sec
Dynamic torque	12,5 daNm	at 500 rpm	Minimun time between two connection	20 sec
	11,0 daNm	at 1000 rpm		
	8,2 daNm	at 1500 rpm		
	7,5 daNm	at 2000 rpm		
	6,7 daNm	at 2500 rpm	Max speed	5000 rpm
	6,5 daNm	at 3000 rpm	Weight	5,5 Kg

Electric absorption	Resistance (Ω)		Current (A)		Power (W)	
	20° C	120° C	20° C	120° C	20° C	120° C
12 V DC	4,00	5,60	3,33	2,00	40,00	24,00
24 V DC	20,00	28,00	1,26	0,77	30,30	18,18

All technical data are at 20°C / at 120 °C the performance are less 20%
All electromagneteic clutches are reversible.

PART NO.	DESCRIPTION	PRICE
29 - 30929 - 1/7	Electromagnetic clutch 12V. 14 Kgm. Fl.1/2 7 PLY RIBBED	£501.80
29 - 30929 - 1 /SA	Electromagnetic clutch 12V. 14 Kgm. Fl. SAE A	£543.70
29 - 30929 - 1 /SB	Electromagnetic clutch 12V. 14 Kgm. Fl. SAE B	£543.70
29 - 30930 - 1	Electromagnetic clutch 24V. 14 Kgm. Fl.1/2	£559.04
29 - 30931 - 1	Electromagnetic clutch 12V. 14 Kgm. Fl.3	£547.67
29 – 30932 - 1	Electromagnetic clutch 24V. 14 Kgm. Fl.3	£547.67
If the part number needed is not listed please ask the Flowfit Sales Team		

FLANGES FOR 14 daNm ELECTROMAGNETIC CLUTCHES

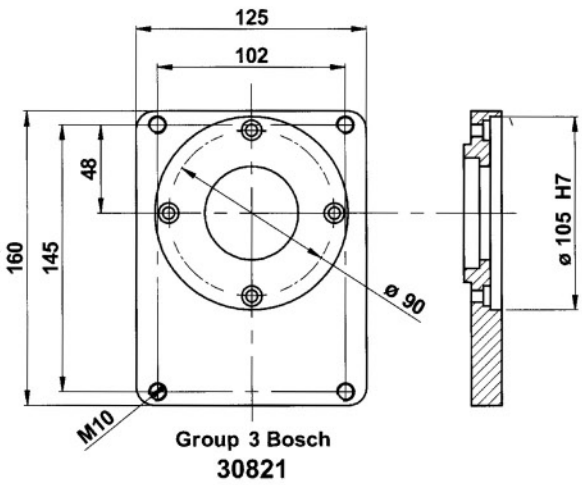

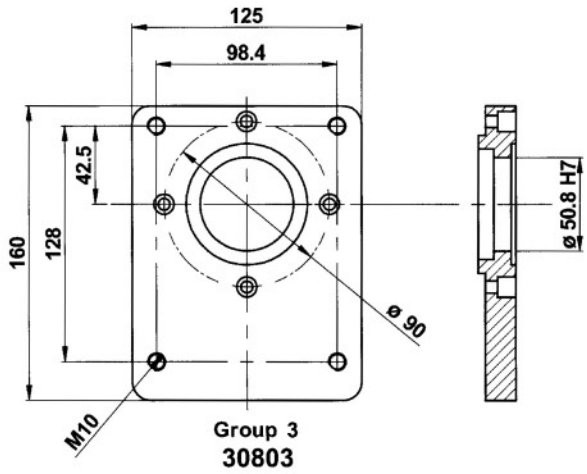

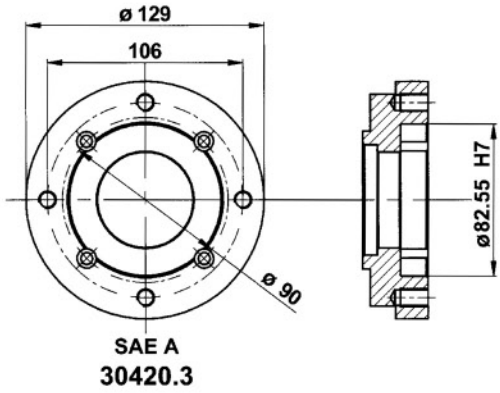

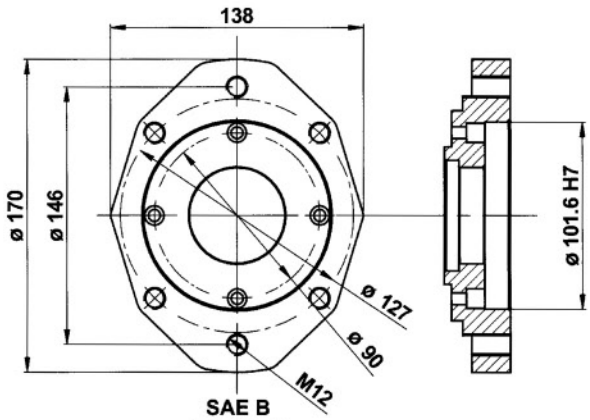

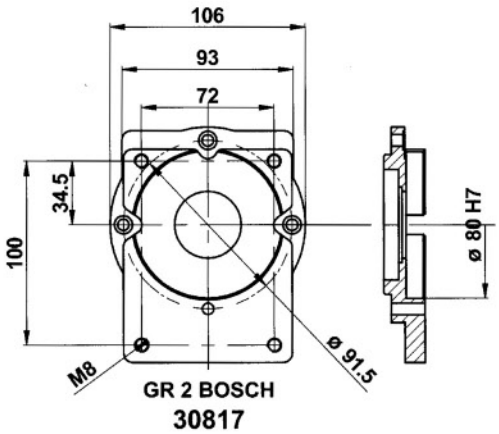

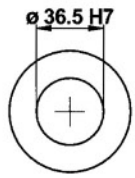

Electric absorption	CLUTCHES COMPLETE WITH ABOVE FLANGES				
	Gr.2 BOSCH	Gr.3	Gr. 3 BOSCH	SAE A	SAE B
12 Volt	30929/2B	30931	30931/3B	30929/SA	30929/SB
24 Volt	30930/2B	30932	30932/3B	30930/SA	30930/SB

21 daNm ELECTROMAGNETIC CLUTCHES

SERIES: 30990 12 Volt SERIES: 30991 24 Volt

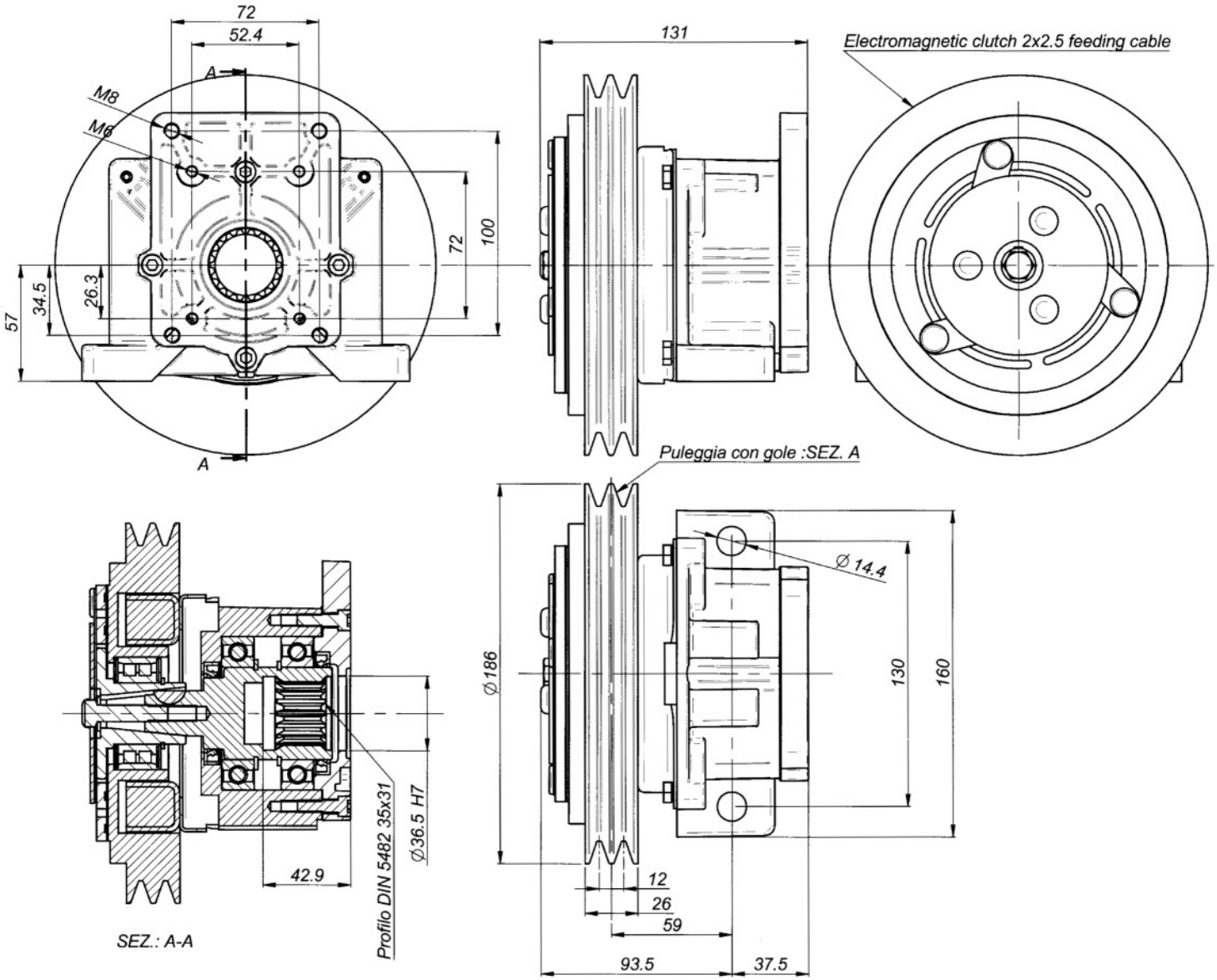

Nominal torque	16,0 daNm		Connection time	25 m/sec
Static torque	21,0 daNm		Disconnection time	40 m/sec
Dynamic torque	14,5 daNm	at 500 rpm	Minimun time between two connection	20 sec
	12,0 daNm	at 1000 rpm		
	9,5 daNm	at 1500 rpm		
	8,8 daNm	at 2000 rpm		
	8,0 daNm	at 2500 rpm	Max speed	5000 rpm
	7,8 daNm	at 3000 rpm	Weight	8 Kg

Electric absorption	Resistance (Ω)		Current (A)		Power (W)	
	20° C	120° C	20° C	120° C	20° C	120° C
12 V DC	2,96	3,97	4,05	2,71	48,70	32,50
24 V DC	12,30	16,60	1,95	1,31	47,00	30,70

All technical data are at 20°C / at 120 °C the performance are less 20%
All electromagneteic clutches are reversible.

PART NO.	DESCRIPTION	PRICE
29 - 30990	Electromagnetic clutch 12V. 21 Kgm. Fl.2	£863.42
29 – 30991	Electromagnetic clutch 24V. 21 Kgm. Fl.2	£863.42
29 - 30991/SB	Electromagnetic clutch 24V. 21 Kgm. Fl. SAE B	£904.05
29 - 30992	Electromagnetic clutch 12V. 21 Kgm. Fl.3	£890.95
29 – 30993	Electromagnetic clutch 24V. 21 Kgm. Fl.3	£890.95
If the part number needed is not listed please ask the Flowfit Sales Team		

FLANGES FOR 21 daNm ELECTROMAGNETIC CLUTCHES

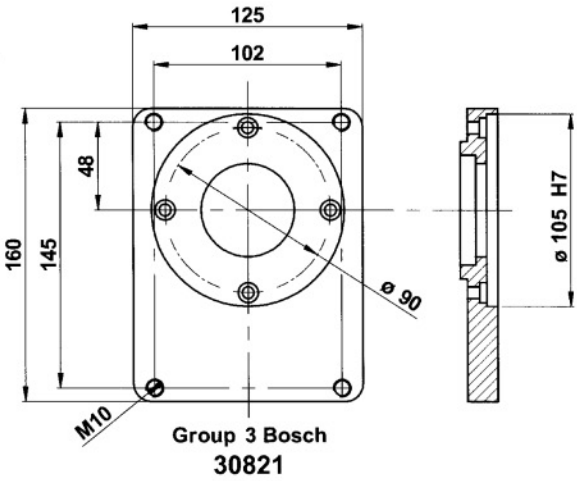

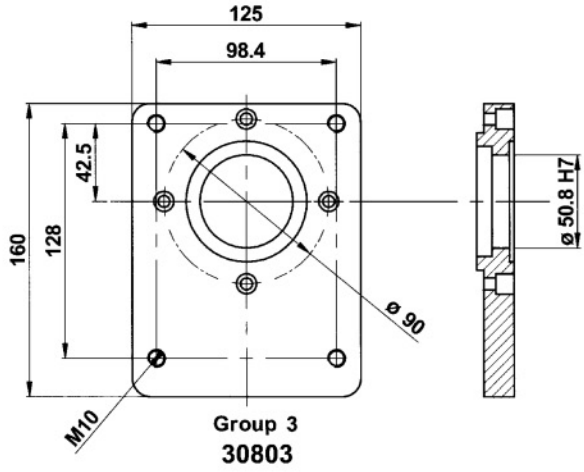

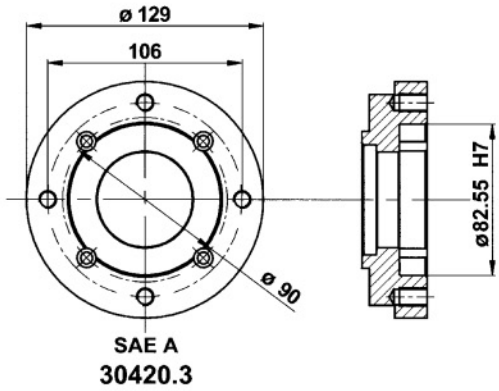

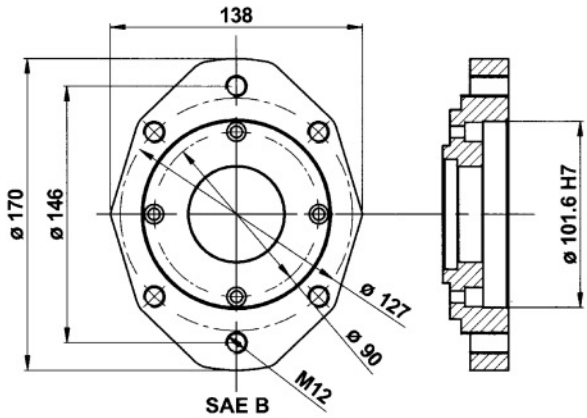

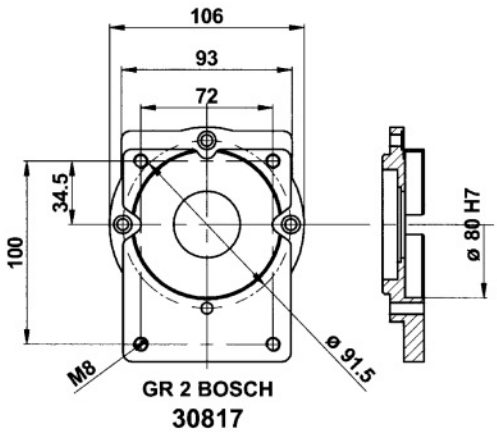

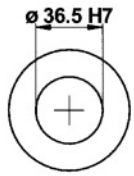

Electric absorption	CLUTCHES COMPLETE WITH ABOVE FLANGES				
	Gr.2 BOSCH	Gr.3	Gr. 3 BOSCH	SAE A	SAE B
12 Volt	30990/2B	30992	30992/3B	30990/SA	30990/SB
24 Volt	30991/2B	30993	30993/3B	30991/SA	30991/SB

50 daNm ELECTROMAGNETIC CLUTCHES

FLOWFIT

SERIES: 30940/SF 12 Volt SERIES: 30941/SF 24 Volt

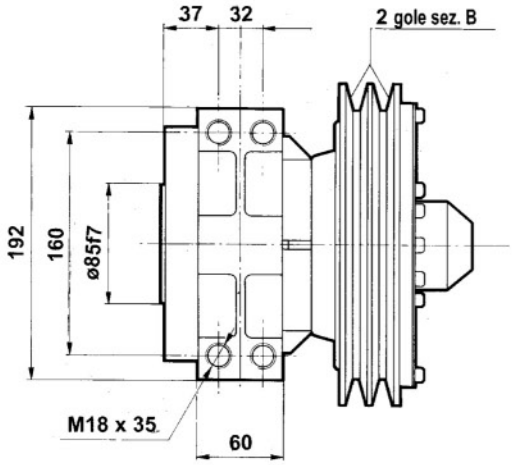

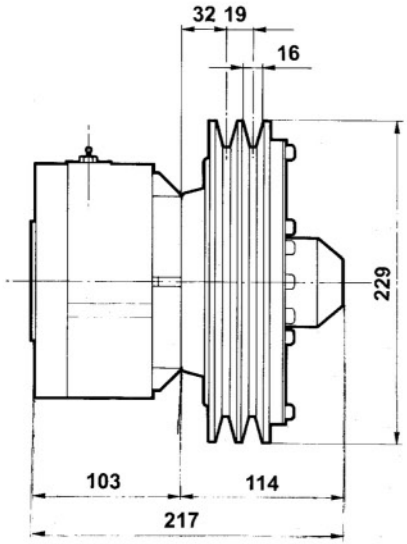

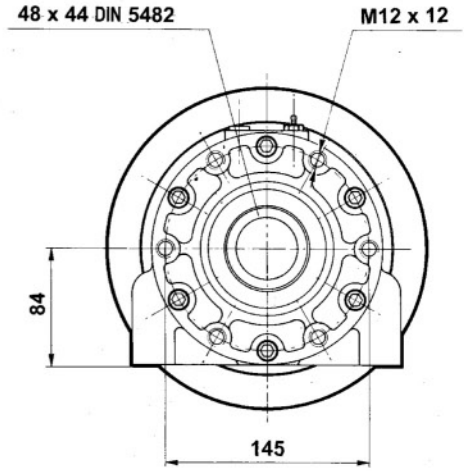

Nominal torque	38,0 daNm		Connection time	25 m/sec
Static torque	50,0 daNm		Disconnection time	40 m/sec
Dynamic torque	33,0 daNm	at 500 rpm	Minimun time between two connection	20 sec
	31,5 daNm	at 1000 rpm		
	28,7 daNm	at 1500 rpm		
	28,0 daNm	at 2000 rpm		
	27,2 daNm	at 2500 rpm	Max speed	5000 rpm
	27,0 daNm	at 3000 rpm	Weight	20 Kg

Electric absorption	Resistance (Ω)		Current (A)		Power (W)	
	20° C	120° C	20° C	120° C	20° C	120° C
12 V DC	1,81	2,60	6,60	4,62	80,00	56,00
24 V DC	7,40	10,50	3,25	2,30	78,00	54,60

All technical data are at 20°C / at 120 °C the performance are less 20%
All electromagneteic clutches are reversible.

PART NO.	DESCRIPTION	PRICE
29 – 30940	Electromagnetic clutch 12V. 30 Kgm. Fl.2	£2554.93
29 – 30941	Electromagnetic clutch 24V. 30 Kgm. Fl.2	£2554.93
29 – 30942	Electromagnetic clutch 12V. 30 Kgm. Fl.3	£2554.93
If the part number needed is not listed please ask the Flowfit Sales Team		

FLANGES FOR 50 daNm ELECTROMAGNETIC CLUTCHES

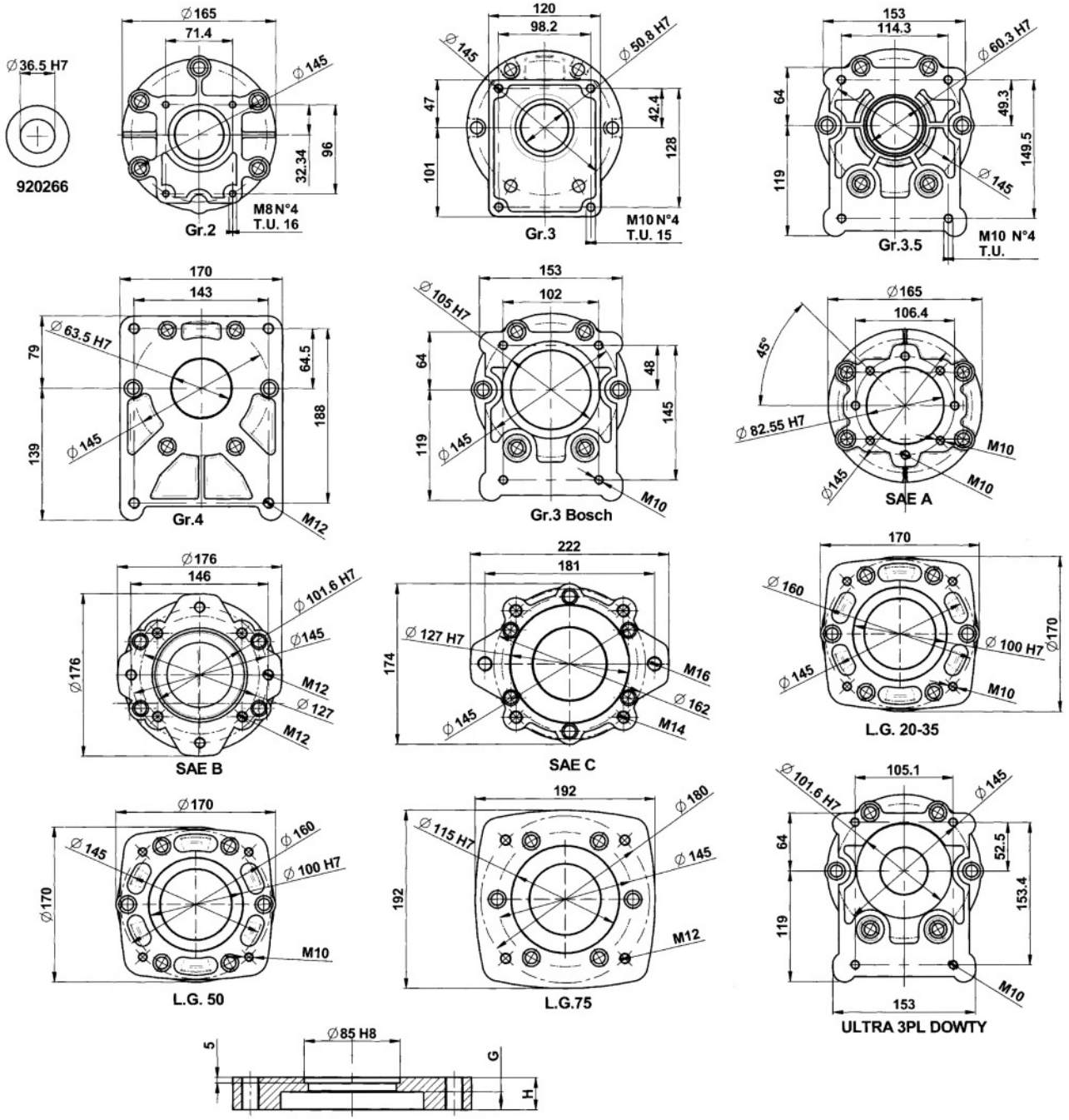

FLANGE TYPE	Gr.2	Gr.3	Gr.3.5	Gr.4	Gr.3 BOSCH	SAE A	SAE B	SAE C	L.G. 20-35	L.G. 50	L.G.75	ULTRA 3PL DOWTY
H	21	23	24	23	19	25	25	28	34	41	41	24.5
G	17	21	11.5	16	12	21	12	16	25	32.5	33	10.5
FLANGE PART NO.	30400	30401	30402	30403	30417	30420	30422	30432	30461	30462	30463	30471

PART NO.	DESCRIPTION	PRICE
28 - 30400	Flange gr.2+socket capscrews	£103.50
28 - 30401	Flange gr.3+socket capscrews	£98.26
28 - 30402	Flange gr.3,5+socket capscrews	£93.02
28 – 30403	Flange gr.4+socket capscrews	£93.02
28 – 30417	Flange gr.3 Bosch+socket capscrews	£117.91
28 – 30420	Flange SAE A 2 holes+socket capscrews	£93.02
28 - 30421	Flange SAE B 2 holes+socket capscrews	£117.91
28 - 30422	Flange SAE B 4 holes+socket capscrews	£117.91
28 - 30431	Flange SAE C 2 holes+socket capscrews	£117.91
28 - 30432	Flange SAE C 4 holes+socket capscrews	£117.91
28 - 30461	Flange L.G. 20-35+socket capscrews	£117.91
28 - 30462	Flange L.G. 50+socket capscrews	£117.91
28 – 30463	Flange L.G. 75+socket capscrews	£117.91
If the part number needed is not listed please ask the Flowfit Sales Team		

ABOVE ARE FLANGES ONLY AND DO NOT INCLUDE THE ELECTROMAGNETIC CLUTCH

50% OFF ALL PRICES

ELECTRO MAGNETIC CLUTCH AND PUMP ASSEMBLIES

12V ELECTRO MAGNETIC CLUTCH AND PUMP ASSEMBLY 12 L/min at 210 bar.....483
12V ELECTRO MAGNETIC CLUTCH AND PUMP ASSEMBLY 25.5 L/min at 210 bar.....483
12V ELECTRO MAGNETIC CLUTCH AND PUMP ASSEMBLY 39 L/min at 210 bar.....483
12V ELECTRO MAGNETIC CLUTCH AND PUMP ASSEMBLY 49.5 L/min at 210 bar.....483
12V ELECTRO MAGNETIC CLUTCH AND PUMP ASSEMBLY 58.5 L/min at 210 bar.....484
12V ELECTRO MAGNETIC CLUTCH AND PUMP ASSEMBLY 66.9 L/min at 210 bar.....484
12V ELECTRO MAGNETIC CLUTCH AND PUMP ASSEMBLY 87.9 L/min at 210 bar.....484
12V ELECTRO MAGNETIC CLUTCH AND PUMP ASSEMBLY 98.7 L/min at 210 bar.....484
12V ELECTRO MAGNETIC CLUTCH AND PUMP ASSEMBLY 109.2 L/min at 210 bar.....485
24V ELECTRO MAGNETIC CLUTCH AND PUMP ASSEMBLY 12 L/min at 210 bar.....485
F24V ELECTRO MAGNETIC CLUTCH AND PUMP ASSEMBLY 25.5 L/min at 210 bar.....485
24V ELECTRO MAGNETIC CLUTCH AND PUMP ASSEMBLY 33 L/min at 210 bar.....485
24V ELECTRO MAGNETIC CLUTCH AND PUMP ASSEMBLY 39 L/min at 210 bar.....486
24V ELECTRO MAGNETIC CLUTCH AND PUMP ASSEMBLY 49.5 L/min at 210 bar.....486
24V ELECTRO MAGNETIC CLUTCH AND PUMP ASSEMBLY 58.5 L/min at 210 bar.....486
24V ELECTRO MAGNETIC CLUTCH AND PUMP ASSEMBLY 66.9 L/min at 210 bar.....486
24V ELECTRO MAGNETIC CLUTCH AND PUMP ASSEMBLY 87.9 L/min at 210 bar.....487
24V ELECTRO MAGNETIC CLUTCH AND PUMP ASSEMBLY 98.7 L/min at 210 bar.....487
24V ELECTRO MAGNETIC CLUTCH AND PUMP ASSEMBLY 109.2 L/min at 210 bar.....487

FLOWFIT

ELECTRO MAGNETIC CLUTCH AND PUMP ASSEMBLIES

The most powerful range in the uk up to 60 danm off the shelf.

Brand new electromagnetic clutch and pump assemblies are commonly used in marine, agricultural, offroad and general industrial applications such as remote hydraulics in service trucks, boats, trucks with automatic transmissions, farm tractors and snow ploughs.

During assembly please make sure there is no oil or grease traces on the pulley surfaces which must be completely dry and clean.

Running in of the full range of electromagnetic clutches is required to obtain the desired rated torque value. Running in is carried out by engaging and disengaging clutch at high speed several times with the pump in the unload position.

When assembling the electromagnetic clutches with any front driving flange please check for correct coupling alignment, but do not exceed rated torque because this would cause slippage of the contact surface where the belts are located. This stage must not last more than 5 seconds as coils within the clutch will burn out.

Mounted inline with engine belt 2 groove pulley

Clockwise rotation - Max 5000rpm

Available electrical inputs available are 12 volts 4.55A and 24v 2.54A

Operating temperature 80 degrees celsius, -20 degrees celsius

Nominal toque, flow rates and voltages shown in part number description.

For lower/higher flow rates and lower /higher speeds please contact us for technical clearance as this will make a difference to the torque suitability of the clutch.

FLOWFIT HYDRAULIC 12V ELECTRO MAGNETIC CLUTCH AND PUMP ASSEMBLY 12 L/min at 210 bar

MOUNTED INLINE ENGINE BELT 2 GOOVE PULLEY, CLOCKWISE ROTATION-
MAX 3000RPM, AVAILIBLE ELECTRICIAL 12V INPUT AT 5A NOMINAL TORQUE,
FLOW RATES AND VOLTAGES SHOWN IN FULL BELOW.

Hydraulic Flow rate of 12Ll/min at 3000 rpm with 4cc group 2 pump.

PART NO.	FLOW @ 3000RPM L/min	WORKING PRESSURE BAR	VOLTS vdc	AMP A	NOMINAL TORQUE daNm	GRP 2 GEAR PUMP cc/rev	PRICE
ZZ000444	12	210	12	5	10	4	£660.94

FURTHER INFORMATION AND TECHNICAL 12V ELECTRO MAGNETIC CLUTCH AND PUMP ASSEMBLY PDF IS AVAILABLE TO DOWNLOAD FROM OUR WEBSITE AT www.flowfitonline.com

FLOWFIT HYDRAULIC 12V ELECTRO MAGNETIC CLUTCH AND PUMP ASSEMBLY 25.5 L/min at 210 bar

MOUNTED INLINE ENGINE BELT 2 GOOVE PULLEY, CLOCKWISE ROTATION-
MAX 3000RPM, AVAILIBLE ELECTRICIAL 12V INPUT AT 5A NOMINAL
TORQUE, FLOW RATES AND VOLTAGES SHOWN IN FULL BELOW.

Hydraulic Flow rate of 25.5 L/min at 3000 rpm with 8.5cc group 2 pump.

PART NO.	FLOW @ 3000RPM L/min	WORKING PRESSURE BAR	VOLTS vdc	AMP A	NOMINAL TORQUE daNm	GRP 2 GEAR PUMP cc/rev	PRICE
ZZ000445	25.5	210	12	5	14	8.5	£660.94

FURTHER INFORMATION AND TECHNICAL 12V ELECTRO MAGNETIC CLUTCH AND PUMP ASSEMBLY PDF IS AVAILABLE TO DOWNLOAD FROM OUR WEBSITE AT www.flowfitonline.com

FLOWFIT HYDRAULIC 12V ELECTRO MAGNETIC CLUTCH AND PUMP ASSEMBLY 39 L/min at 210 bar

MOUNTED INLINE ENGINE BELT 2 GOOVE PULLEY, CLOCKWISE ROTATION-
MAX 3000RPM, AVAILIBLE ELECTRICIAL 12V INPUT AT 5A NOMINAL
TORQUE, FLOW RATES AND VOLTAGES SHOWN IN FULL BELOW.

Hydraulic Flow rate of 39 L/min at 3000 rpm with 26cc group 2 pump.

PART NO.	FLOW @ 3000RPM L/min	WORKING PRESSURE BAR	VOLTS vdc	AMP A	NOMINAL TORQUE daNm	GRP 2 GEAR PUMP cc/rev	PRICE
ZZ000436	39	210	12	5	14	26	£665.04

FURTHER INFORMATION AND TECHNICAL 12V ELECTRO MAGNETIC CLUTCH AND PUMP ASSEMBLY PDF IS AVAILABLE TO DOWNLOAD FROM OUR WEBSITE AT www.flowfitonline.com

FLOWFIT HYDRAULIC 12V ELECTRO MAGNETIC CLUTCH AND PUMP ASSEMBLY 49.5 L/min at 210 bar

MOUNTED INLINE ENGINE BELT 2 GOOVE PULLEY, CLOCKWISE ROTATION-
MAX 3000RPM, AVAILIBLE ELECTRICIAL 12V INPUT AT 3A NOMINAL TORQUE,
FLOW RATES AND VOLTAGES SHOWN IN FULL BELOW.

Hydraulic Flow rate of 49.5 L/min at 3000 rpm with 16.5cc group 2 pump.

PART NO.	FLOW @ 3000RPM L/min	WORKING PRESSURE BAR	VOLTS vdc	AMP A	NOMINAL TORQUE daNm	GRP 2 GEAR PUMP cc/rev	PRICE
ZZ000449	49.5	210	12	5	14	16.5	£720.81

FURTHER INFORMATION AND TECHNICAL 12V ELECTRO MAGNETIC CLUTCH AND PUMP ASSEMBLY PDF IS AVAILABLE TO DOWNLOAD FROM OUR WEBSITE AT www.flowfitonline.com

FLOWFIT HYDRAULIC 12V ELECTRO MAGNETIC CLUTCH AND PUMP ASSEMBLY 58.5 L/min at 210 bar

MOUNTED INLINE ENGINE BELT 2 GOOVE PULLEY, CLOCKWISE ROTATION- MAX 3000RPM, AVAILIBLE ELECTRICIAL 12V INPUTS AT 5A NOMINAL TORQUE, FLOW RATES AND VOLTAGES SHOWN IN FULL BELOW.

Hydraulic Flow rate of 58.5 L/min at 3000 rpm with 19.5cc group 2 pump.

PART NO.	FLOW @ 3000RPM L/min	WORKING PRESSURE BAR	VOLTS vdc	AMP A	NOMINAL TORQUE daNm	GRP 2 GEAR PUMP cc/rev	PRICE
ZZ000450	58.5	210	12	5	14	19.5	£727.76

FURTHER INFORMATION AND TECHNICAL 12V ELECTRO MAGNETIC CLUTCH AND PUMP ASSEMBLY PDF IS AVAILABLE TO DOWNLOAD FROM OUR WEBSITE AT www.flowfitonline.com

FLOWFIT HYDRAULIC 12V ELECTRO MAGNETIC CLUTCH AND PUMP ASSEMBLY 66.9 L/min at 210 bar

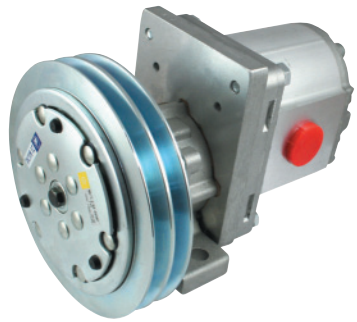

MOUNTED INLINE ENGINE BELT 2 GOOVE PULLEY, CLOCKWISE ROTATION- MAX 3000RPM, AVAILIBLE ELECTRICIAL 12V INPUT AT 5A NOMINAL TORQUE, FLOW RATES AND VOLTAGES SHOWN IN FULL BELOW.

Hydraulic Flow rate of 66.9 L/min at 3000 rpm with 22.3cc group 3 pump.

PART NO.	FLOW @ 3000RPM L/min	WORKING PRESSURE BAR	VOLTS vdc	AMP A	NOMINAL TORQUE daNm	GRP 3 GEAR PUMP cc/rev	PRICE
ZZ000454	66.9	210	12	5	21	22.3	£1291.00

FURTHER INFORMATION AND TECHNICAL 12V ELECTRO MAGNETIC CLUTCH AND PUMP ASSEMBLY PDF IS AVAILABLE TO DOWNLOAD FROM OUR WEBSITE AT www.flowfitonline.com

FLOWFIT HYDRAULIC 12V ELECTRO MAGNETIC CLUTCH AND PUMP ASSEMBLY 87.9 L/min at 210 bar

MOUNTED INLINE ENGINE BELT 2 GOOVE PULLEY, CLOCKWISE ROTATION- MAX 3000RPM, AVAILIBLE ELECTRICIAL 12V INPUT AT 5A NOMINAL TORQUE, FLOW RATES AND VOLTAGES SHOWN IN FULL BELOW.

Hydraulic Flow rate of 87.9 L/min at 3000 rpm with 29.3cc group 3 pump.

PART NO.	FLOW @ 3000RPM L/min	WORKING PRESSURE BAR	VOLTS vdc	AMP A	NOMINAL TORQUE daNm	GRP 3 GEAR PUMP cc/rev	PRICE
ZZ000455	87.9	210	12	5	21	29.3	£1303.32

FURTHER INFORMATION AND TECHNICAL 12V ELECTRO MAGNETIC CLUTCH AND PUMP ASSEMBLY PDF IS AVAILABLE TO DOWNLOAD FROM OUR WEBSITE AT www.flowfitonline.com

FLOWFIT HYDRAULIC 12V ELECTRO MAGNETIC CLUTCH AND PUMP ASSEMBLY 98.7 L/min at 210 bar

MOUNTED INLINE ENGINE BELT 2 GOOVE PULLEY, CLOCKWISE ROTATION- MAX 3000RPM, AVAILIBLE ELECTRICIAL 12V INPUT AT 5A NOMINAL TORQUE, FLOW RATES AND VOLTAGES SHOWN IN FULL BELOW.

Hydraulic Flow rate of 98.7 L/min at 3000 rpm with 32.9cc group 3 pump.

PART NO.	FLOW @ 3000RPM L/min	WORKING PRESSURE BAR	VOLTS vdc	AMP A	NOMINAL TORQUE daNm	GRP 3 GEAR PUMP cc/rev	PRICE
ZZ000456	98.7	210	12	5	21	32.9	£1303.32

FURTHER INFORMATION AND TECHNICAL 12V ELECTRO MAGNETIC CLUTCH AND PUMP ASSEMBLY PDF IS AVAILABLE TO DOWNLOAD FROM OUR WEBSITE AT www.flowfitonline.com

FLOWFIT HYDRAULIC 12V ELECTRO MAGNETIC CLUTCH AND PUMP ASSEMBLY 109.2 L/min at 210 bar

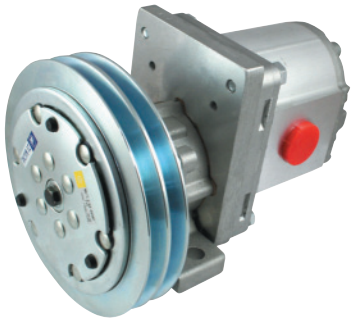

MOUNTED INLINE ENGINE BELT 2 GOOVE PULLEY, CLOCKWISE ROTATION-
MAX 3000RPM, AVAILIBLE ELECTRICIAL 12V INPUT AT 5A NOMINAL TORQUE,
FLOW RATES AND VOLTAGES SHOWN IN FULL BELOW.

Hydraulic Flow rate of 109.20 L/min at 3000 rpm with 36.4cc group 3 pump.

PART NO.	FLOW @ 3000RPM L/min	WORKING PRESSURE BAR	VOLTS vdc	AMP A	NOMINAL TORQUE daNm	GRP 3 GEAR PUMP cc/rev	PRICE
ZZ000457	109.2	210	12	5	21	36.4	£1303.32

FURTHER INFORMATION AND TECHNICAL 12V ELECTRO MAGNETIC CLUTCH AND PUMP ASSEMBLY PDF IS AVAILABLE TO DOWNLOAD FROM OUR WEBSITE AT www.flowfitonline.com

FLOWFIT HYDRAULIC 24V ELECTRO MAGNETIC CLUTCH AND PUMP ASSEMBLY 12 L/min at 210 bar

MOUNTED INLINE ENGINE BELT 2 GOOVE PULLEY, CLOCKWISE ROTATION-
MAX 3000RPM, AVAILIBLE ELECTRICIAL 12V INPUT AT 5A OR NOMINAL
TORQUE, FLOW RATES AND VOLTAGES SHOWN IN FULL BELOW.

Hydraulic Flow rate of 12 L/min at 3000 rpm with 4cc group 2 pump.

PART NO.	FLOW @ 3000RPM L/min	WORKING PRESSURE BAR	VOLTS vdc	AMP A	NOMINAL TORQUE daNm	GRP 2 GEAR PUMP cc/rev	PRICE
ZZ000446	12	210	24	5	10	4	£660.94

FURTHER INFORMATION AND TECHNICAL 24V ELECTRO MAGNETIC CLUTCH AND PUMP ASSEMBLY PDF IS AVAILABLE TO DOWNLOAD FROM OUR WEBSITE AT www.flowfitonline.com

FLOWFIT HYDRAULIC 24V ELECTRO MAGNETIC CLUTCH AND PUMP ASSEMBLY 25.5 L/min at 210 bar

MOUNTED INLINE ENGINE BELT 2 GOOVE PULLEY, CLOCKWISE ROTATION-
MAX 3000RPM, AVAILIBLE ELECTRICIAL 24V INPUT AT 3A NOMINAL TORQUE,
FLOW RATES AND VOLTAGES SHOWN IN FULL BELOW.

Hydraulic Flow rate of 25.5 L/min at 3000 rpm with 8.5cc group 2 pump.

PART NO.	FLOW @ 3000RPM L/min	WORKING PRESSURE BAR	VOLTS vdc	AMP A	NOMINAL TORQUE daNm	GRP 2 GEAR PUMP cc/rev	PRICE
ZZ000447	25.5	210	24	5	10	8.5	£660.94

FURTHER INFORMATION AND TECHNICAL 24V ELECTRO MAGNETIC CLUTCH AND PUMP ASSEMBLY PDF IS AVAILABLE TO DOWNLOAD FROM OUR WEBSITE AT www.flowfitonline.com

FLOWFIT HYDRAULIC 24V ELECTRO MAGNETIC CLUTCH AND PUMP ASSEMBLY 33 L/min at 210 bar

MOUNTED INLINE ENGINE BELT 2 GOOVE PULLEY, CLOCKWISE ROTATION-
MAX 3000RPM, AVAILIBLE ELECTRICIAL 24V INPUT AT 3A NOMINAL
TORQUE, FLOW RATES AND VOLTAGES SHOWN IN FULL BELOW.

Hydraulic Flow rate of 33 L/min at 3000 rpm with 11cc group 2 pump.

PART NO.	FLOW @ 3000RPM L/min	WORKING PRESSURE BAR	VOLTS vdc	AMP A	NOMINAL TORQUE daNm	GRP 2 GEAR PUMP cc/rev	PRICE
ZZ000451	33	210	24	5	14	11	£667.09

FURTHER INFORMATION AND TECHNICAL 24V ELECTRO MAGNETIC CLUTCH AND PUMP ASSEMBLY PDF IS AVAILABLE TO DOWNLOAD FROM OUR WEBSITE AT www.flowfitonline.com

FLOWFIT HYDRAULIC 24V ELECTRO MAGNETIC CLUTCH AND PUMP ASSEMBLY 39 L/min at 210 bar

MOUNTED INLINE ENGINE BELT 2 GOOVE PULLEY, CLOCKWISE ROTATION-
MAX 3000RPM, AVAILIBLE ELECTRICIAL 24V INPUT AT 3A NOMINAL
TORQUE, FLOW RATES AND VOLTAGES SHOWN IN FULL BELOW.

Hydraulic Flow rate of 39 L/min at 3000 rpm with 26cc group 2 pump.

PART NO.	FLOW @ 3000RPM L/min	WORKING PRESSURE BAR	VOLTS vdc	AMP A	NOMINAL TORQUE daNm	GRP 2 GEAR PUMP cc/rev	PRICE
ZZ000437	39	210	24	5	14	26	£665.04

FURTHER INFORMATION AND TECHNICAL 24V ELECTRO MAGNETIC CLUTCH AND PUMP ASSEMBLY PDF IS AVAILABLE TO DOWNLOAD FROM OUR WEBSITE AT www.flowfitonline.com

FLOWFIT HYDRAULIC 24V ELECTRO MAGNETIC CLUTCH AND PUMP ASSEMBLY 49.5 L/min at 210 bar

MOUNTED INLINE ENGINE BELT 2 GOOVE PULLEY, CLOCKWISE ROTATION-
MAX 500RPM, AVAILIBLE ELECTRICIAL 24V INPUT AT 3A NOMINAL TORQUE,
FLOW RATES AND VOLTAGES SHOWN IN FULL BELOW.

Hydraulic Flow rate of 49.5 L/min at 3000 rpm with 16.5cc group 2 pump.

PART NO.	FLOW @ 3000RPM L/min	WORKING PRESSURE BAR	VOLTS vdc	AMP A	NOMINAL TORQUE daNm	GRP 2 GEAR PUMP cc/rev	PRICE
ZZ000452	49.5	210	24	5	14	16.5	£720.81

FURTHER INFORMATION AND TECHNICAL 24V ELECTRO MAGNETIC CLUTCH AND PUMP ASSEMBLY PDF IS AVAILABLE TO DOWNLOAD FROM OUR WEBSITE AT www.flowfitonline.com

FLOWFIT HYDRAULIC 24V ELECTRO MAGNETIC CLUTCH AND PUMP ASSEMBLY 58.5 L/min at 210 bar

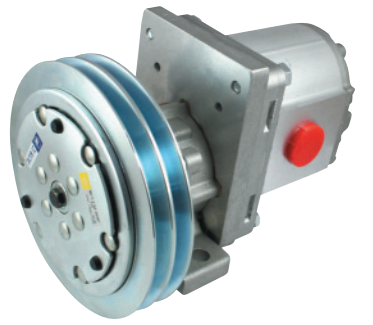

MOUNTED INLINE ENGINE BELT 2 GOOVE PULLEY, CLOCKWISE ROTATION-
MAX 3000RPM, AVAILIBLE ELECTRICIAL 24V INPUT AT 3A NOMINAL
TORQUE, FLOW RATES AND VOLTAGES SHOWN IN FULL BELOW.

Hydraulic Flow rate of 58.5 L/min at 3000 rpm with 19.5cc group 3 pump.

PART NO.	FLOW @ 3000RPM L/min	WORKING PRESSURE BAR	VOLTS vdc	AMP A	NOMINAL TORQUE daNm	GRP 3 GEAR PUMP cc/rev	PRICE
ZZ000453	58.5	210	24	5	21	19.5	£727.76

FURTHER INFORMATION AND TECHNICAL 24V ELECTRO MAGNETIC CLUTCH AND PUMP ASSEMBLY PDF IS AVAILABLE TO DOWNLOAD FROM OUR WEBSITE AT www.flowfitonline.com

FLOWFIT HYDRAULIC 24V ELECTRO MAGNETIC CLUTCH AND PUMP ASSEMBLY 66.9 L/min at 210 bar

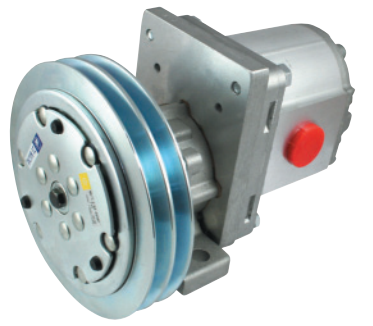

MOUNTED INLINE ENGINE BELT 2 GOOVE PULLEY, CLOCKWISE ROTATION-
MAX 3000RPM, AVAILIBLE ELECTRICIAL 24V INPUT AT 3A NOMINAL
TORQUE, FLOW RATES AND VOLTAGES SHOWN IN FULL BELOW.

Hydraulic Flow rate of 66.9 L/min at 3000 rpm with 22.3cc group 3 pump.

PART NO.	FLOW @ 3000RPM L/min	WORKING PRESSURE BAR	VOLTS vdc	AMP A	NOMINAL TORQUE daNm	GRP 3 GEAR PUMP cc/rev	PRICE
ZZ000459	66.9	210	24	5	21	22.3	£1225.48

FURTHER INFORMATION AND TECHNICAL 24V ELECTRO MAGNETIC CLUTCH AND PUMP ASSEMBLY PDF IS AVAILABLE TO DOWNLOAD FROM OUR WEBSITE AT www.flowfitonline.com

FLOWFIT HYDRAULIC 24V ELECTRO MAGNETIC CLUTCH AND PUMP ASSEMBLY 87.9 L/min at 210 bar

MOUNTED INLINE ENGINE BELT 2 GOOVE PULLEY, CLOCKWISE ROTATION-
MAX 3000RPM, AVAILIBLE ELECTRICIAL 24V INPUT AT 3A NOMINAL
TORQUE, FLOW RATES AND VOLTAGES SHOWN IN FULL BELOW.

Hydraulic Flow rate of 87.9 L/min at 3000 rpm with 29.3cc group 3 pump.

PART NO.	FLOW @ 3000RPM L/min	WORKING PRESSURE BAR	VOLTS vdc	AMP A	NOMINAL TORQUE daNm	GRP 3 GEAR PUMP cc/rev	PRICE
ZZ000460	87.9	210	24	5	21	29.3	£1303.32

FURTHER INFORMATION AND TECHNICAL 24V ELECTRO MAGNETIC CLUTCH AND PUMP ASSEMBLY PDF IS AVAILABLE TO DOWNLOAD FROM OUR WEBSITE AT www.flowfitonline.com

FLOWFIT HYDRAULIC 24V ELECTRO MAGNETIC CLUTCH AND PUMP ASSEMBLY 98.7 L/min at 210 bar

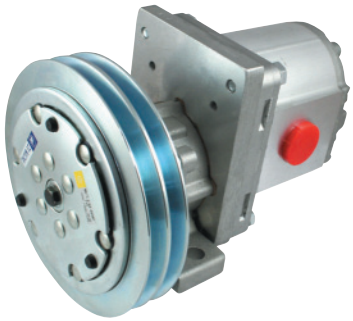

MOUNTED INLINE ENGINE BELT 2 GOOVE PULLEY, CLOCKWISE ROTATION-
MAX 3000RPM, AVAILIBLE ELECTRICIAL 24V INPUTS AT 3A NOMINAL
TORQUE, FLOW RATES AND VOLTAGES SHOWN IN FULL BELOW.

Hydraulic Flow rate of 98.7 L/min at 3000 rpm with 32.9cc group 3 pump.

PART NO.	FLOW @ 3000RPM L/min	WORKING PRESSURE BAR	VOLTS vdc	AMP A	NOMINAL TORQUE daNm	GRP 3 GEAR PUMP cc/rev	PRICE
ZZ000461	98.7	210	24	5	21	32.9	£1303.32

FURTHER INFORMATION AND TECHNICAL 24V ELECTRO MAGNETIC CLUTCH AND PUMP ASSEMBLY PDF IS AVAILABLE TO DOWNLOAD FROM OUR WEBSITE AT www.flowfitonline.com

FLOWFIT HYDRAULIC 24V ELECTRO MAGNETIC CLUTCH AND PUMP ASSEMBLY 109.2 L/min at 210 bar

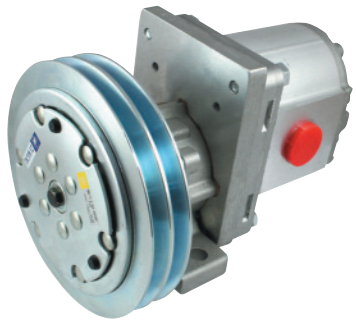

MOUNTED INLINE ENGINE BELT 2 GOOVE PULLEY, CLOCKWISE ROTATION-
MAX 3000RPM, AVAILIBLE ELECTRICIAL 24V INPUT AT 3A NOMINAL
TORQUE, FLOW RATES AND VOLTAGES SHOWN IN FULL BELOW.

Hydraulic Flow rate of 109.2 L/min at 3000 rpm with 36.4cc group 3 pump.

PART NO.	FLOW @ 3000RPM L/min	WORKING PRESSURE BAR	VOLTS vdc	AMP A	NOMINAL TORQUE daNm	GRP 3 GEAR PUMP cc/rev	PRICE
ZZ000462	109.2	210	24	5	21	36.4	£1303.32

FURTHER INFORMATION AND TECHNICAL 24V ELECTRO MAGNETIC CLUTCH AND PUMP ASSEMBLY PDF IS AVAILABLE TO DOWNLOAD FROM OUR WEBSITE AT www.flowfitonline.com

SPEED REDUCTION GEARBOXES

95000 SERIES ALUMINIUM SPEED REDUCTION GEARBOXES.....489
96000 SERIES ALUMINIUM SPEED REDUCTION GEARBOXES.....491
97500 SERIES CAST IRON SPEED REDUCTION GEARBOXES 493
97003 CAST IRON SPEED REDUCTION GEARBOX 495
97001 CAST IRON SPEED REDUCTION GEARBOX 496
97001/13 – 97001/15 CAST IRON SPEED REDUCTION GEARBOX 497

The Speed Reduction Gearboxes are used for installing hydraulic motors onto self propelled farm machinery,earth moving machines,marine machines and horse walking applications.

The reduced outspeed is 200 rpm therefore the working speed of the hydraulic motors is top be adjusted accordingly,provided that the input speed does not exceed 3000 rpm.

Gearboxes are made of aluminum and cast iron construction with very high mechanical resistance.

Gears
Manufactured in compliance with ISO/DIN 3990-80 standards.
Made in steel UNI,involute gears are shaved and case hardened.

Shafts
Case hardened made in steel and key-coupled with gears.

Torques
Torques mentioned in our technical charts for speed reduction gearboxes refer to continuous duty cycles.

Torques under intermittent duty cycles can be increased by 20%

Lubrication
SAE 90 gear oil must be put in the speed reduction gearbox prior to use-please note we do not supply the gear oil and will not accept responsibility for customers not doing putting oil in.

Change the oil after the first 100 hours and then every 12 months or 1500 hours which ever falls first.

Maintenance
Please check the oil level via the special oil window every 50 hours.
Working temperatures should not exceed 120 degrees celcius under continuous duty cycle.

Specifiy the correct speed reduction gearbox.

Please check with the Technical Sales Office if you are not sure which speed reduction gearbox to use.

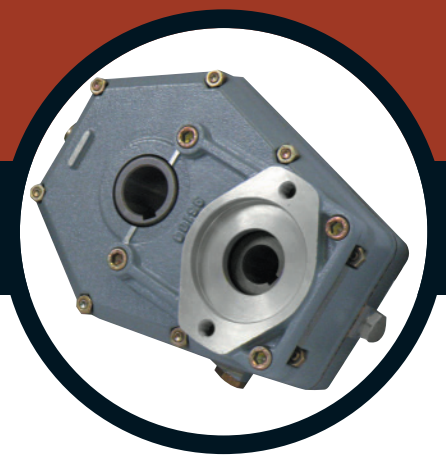

FLOWFIT

95000 SERIES ALUMINIUM SPEED REDUCTION GEARBOXES

FLOWFIT

GROUP 2 • SAE 'A' • 10KW

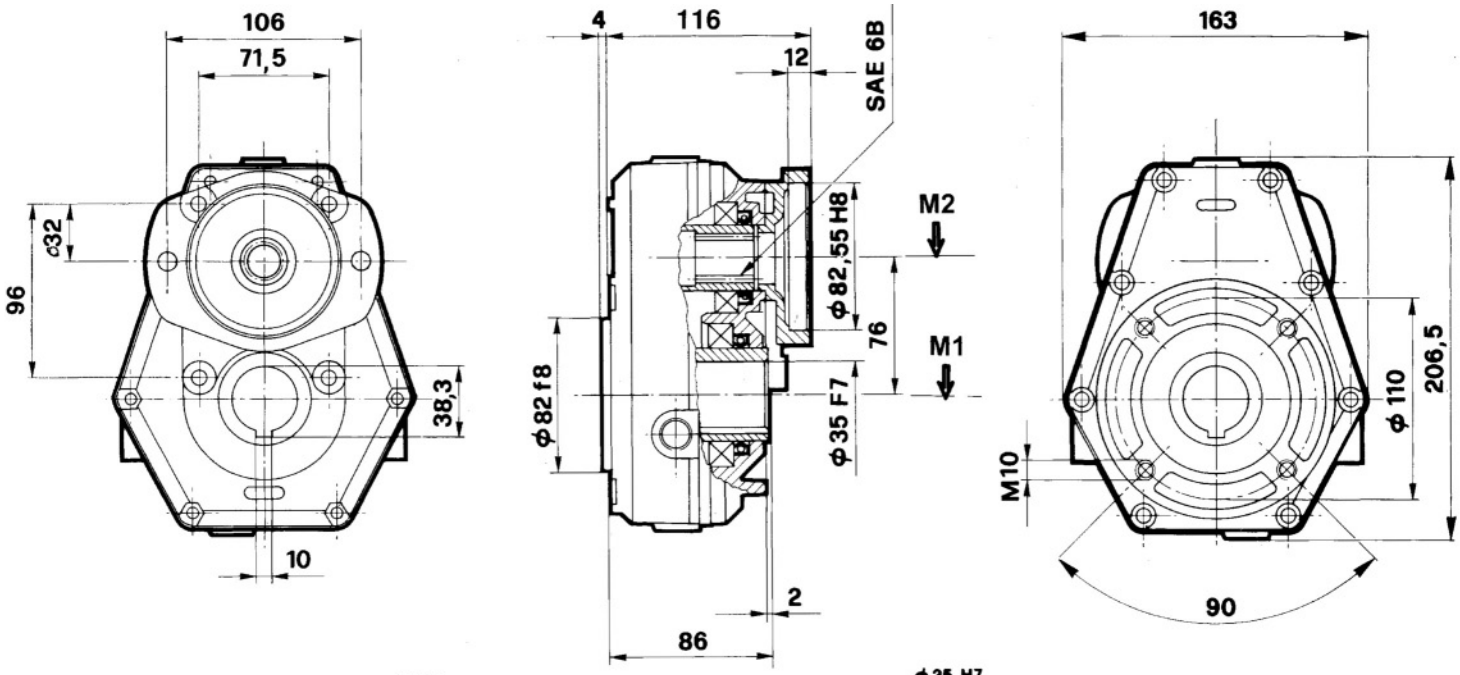

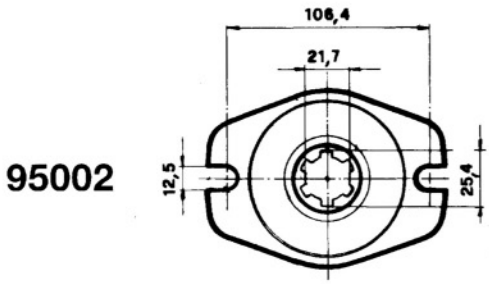

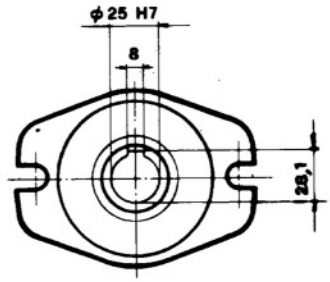

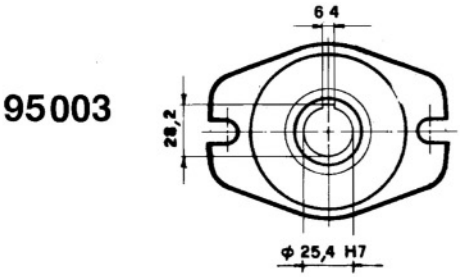

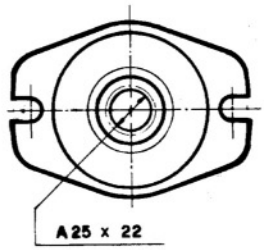

MAX OIL LEVEL 0.22 LITRE

M1 MAXIMUM CONTINUOUS TORQUE OF THE SPEED INCREASER (Input side daNm)	M2 MAXIMUM TORQUE OF THE SPEED INCREASER (Output side daNm)	N1 OUTPUT SPEED AFTER REDUCTION RPM	N2 INPUT SPEED BEFORE REDUCTION RPM	I RATIO OF SPEED REDUCTION ON N2 = N1	MAX TRANSMITTABLE POWER KW	WEIGHT KG
19,6	13,1	200	300	1,5	10	5
17,6	8,8	200	400	2	10	5
19,2	7,7	200	500	2,5	10	5
20,1	6,7	200	600	3	10	5
21,4	6,3	200	700	3,5	10	5
18,6	4,9	200	760	3,8	10	5

FACTORY PREFIX
38

SPEED REDUCTION GEARBOX
95001
95002
95003
95004

RATIO AVAILABLE
1,5
2
2,5
3
3,5
3,8

95001 SPEED REDUCTION GEARBOX

FLOWFIT

PART NO.	DESCRIPTION OF REDUCTION GEARBOX	PRICE
38 - 95001-1	Reduction gear gr.2 SAE A dia.25 R.1:1,5	£242.39
38 - 95001-2	Reduction gear gr.2 SAE A dia.25 R.1:2	£242.39
38 - 95001-2/30	Reduction gear gr.2 SAE A dia.25 R.1:2 female through-shaft	£242.39
38 - 95001-3	Reduction gear gr.2 SAE A dia.25 R.1:2,5	£209.64
38 - 95001-4	Reduction gear gr.2 SAE A dia.25 R.1:3	£209.64
38 - 95001-4/1	Reduction gear gr.2 SAE A dia.25 R.1:3 female through-shaft	£209.64
38 - 95001-5	Reduction gear gr.2 SAE A dia.25 R.1:3,5	£209.64
38 - 95001-5/1	Reduction gear gr.2 SAE A dia.25 R.1:3,5 female through-shaft	£209.64
38 - 95001-5/2	Reduction gear gr.2 SAE A dia.25 R.1:3,5 female through-shaft	£209.64
38 - 95001-6	Reduction gear gr.2 SAE A dia.25 R.1:3,8	£209.64
38 - 95001-6/3	Reduction gear gr.2 SAE A dia.25 R.1:3,8 female through-shaft	£209.64

95002 SPEED REDUCTION GEARBOX

FLOWFIT

PART NO.	DESCRIPTION OF REDUCTION GEARBOX	PRICE
38 - 95002-1	Reduction gear gr.2 SAE A-SAE 6B R.1:1,5	£242.39
38 - 95002-2	Reduction gear gr.2 SAE A-SAE 6B R.1:2	£242.39
38 - 95002-3	Reduction gear gr.2 SAE A-SAE 6B R.1:2,5	£209.64
38 - 95002-3/1	Reduction gear gr.2 SAE A-SAE 6B R.1:2,5 female through-shaft	£209.64
38 - 95002-3/2	Reduction gear gr.2 SAE A-SAE 6B R.1:2,5 female through-shaft	£209.64
38 - 95002-3/3	Reduction gear gr.2 SAE A-SAE 6B R.1:2,5 female through-shaft	£209.64
38 - 95002-4	Reduction gear gr.2 SAE A-SAE 6B R.1:3	£209.64
38 - 95002-4/1	Reduction gear gr.2 SAE A-SAE 6B R.1:3 female through-shaft	£209.64
38 - 95002-4/30	Reduction gear gr.2 SAE A-SAE 6B R.1:3 female through-shaft	£209.64
38 - 95002-5	Reduction gear gr.2 SAE A-SAE 6B R.1:3,5	£209.64
38 - 95002-6	Reduction gear gr.2 SAE A-SAE 6B R.1:3,8	£209.64

95003 SPEED REDUCTION GEARBOX

FLOWFIT

PART NO.	DESCRIPTION OF REDUCTION GEARBOX	PRICE
38 - 95003-1	Reduction gear gr.2 SAE A dia.25,4 R.1:1,5	£242.39
38 - 95003-2	Reduction gear gr.2 SAE A dia.25,4 R.1:2	£242.39
38 - 95003-3	Reduction gear gr.2 SAE A dia.25,4 R.1:2,5	£209.64
38 - 95003-4	Reduction gear gr.2 SAE A dia.25,4 R.1:3	£209.64
38 - 95003-5	Reduction gear gr.2 SAE A dia.25,4 R.1:3,5	£209.64
38 - 95003-6	Reduction gear gr.2 SAE A dia.25,4 R.1:3,8	£209.64

95004 SPEED REDUCTION GEARBOX

FLOWFIT

PART NO.	DESCRIPTION OF REDUCTION GEARBOX	PRICE
38 - 95004-1	Reduction gear gr.2 SAE A 25X22 R.1:1,5	£242.39
38 - 95004-2	Reduction gear gr.2 SAE A 25X22 R.1:2	£242.39
38 - 95004-3	Reduction gear gr.2 SAE A 25X22 R.1:2,5	£209.64
38 - 95004-4	Reduction gear gr.2 SAE A 25X22 R.1:3	£209.64
38 - 95004-5	Reduction gear gr.2 SAE A 25X22 R.1:3,5	£209.64
38 - 95004-6	Reduction gear gr.2 SAE A 25X22 R.1:3,8	£209.64

96000 SERIES ALUMINIUM SPEED REDUCTION GEARBOXES

FLOWFIT

GROUP 3 • SAE 'A' + SAE 'B' • 20KW

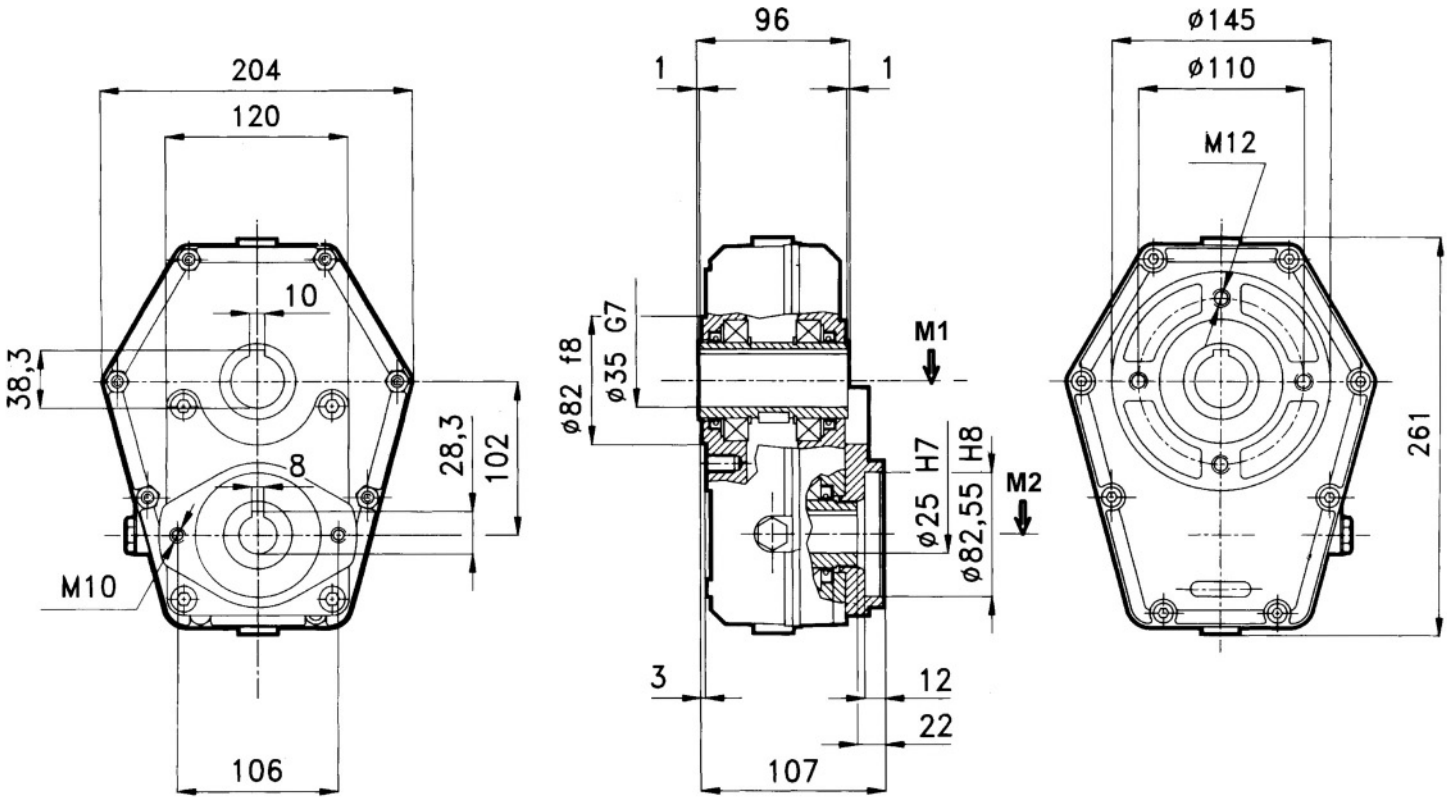

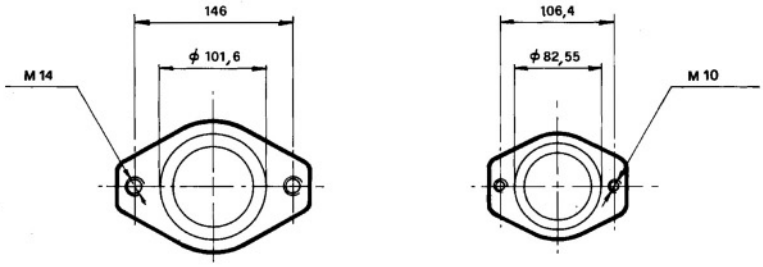

SAE 6B
96002

SAE B
96005

SAE A
96001

35x31 DIN 5482
96004

MAX OIL LEVEL 0.35 LITRE

M1 MAXIMUM CONTINUOUS TORQUE OF THE SPEED INCREASER (Input side daNm)	M2 MAXIMUM TORQUE OF THE SPEED INCREASER (Output side daNm)	N1 OUTPUT SPEED AFTER REDUCTION RPM	N2 INPUT SPEED BEFORE REDUCTION RPM	I RATIO OF SPEED REDUCTION ON N2 = N1	MAX TRANSMITTABLE POWER KW	WEIGHT KG
48	32	200	300	1,5	20	8,5
48,5	24,2	200	400	2	20	8,5
52	20,8	200	500	2,5	20	8,5
57	19	200	600	3	20	8,5
53	15,1	200	680	3,5	20	8,5
52,5	13,8	200	760	3,8	20	8,5

FACTORY PREFIX
39

SPEED REDUCTION GEARBOX
96001
96002
96004
96005

RATIO AVAILABLE
1,5
2
2,5
3
3,5
3,8

96001 SPEED REDUCTION GEARBOX

FLOWFIT

PART NO.	DESCRIPTION OF REDUCTION GEARBOX	PRICE
39 - 96001-1	Reduction gear gr.3 SAE A dia.25 R.1:1,5	£379.96
39 - 96001-2	Reduction gear gr.3 SAE A dia.25 R.1:2	£379.96
39 - 96001-3	Reduction gear gr.3 SAE A dia.25 R.1:2,5	£353.75
39 - 96001-4	Reduction gear gr.3 SAE A dia.25 R.1:3	£353.75
39 - 96001-4/32P	Reduction gear gr.3 SAE A dia.32 R.1:3 female through-shaft	£393.07
39 - 96001-5	Reduction gear gr.3 SAE A dia.25 R.1:3,5	£353.75
39 - 96001-6	Reduction gear gr.3 SAE A dia.25 R.1:3,8	£353.75
39 - 96001-6/1	Reduction gear gr.3 SAE A dia.25 R.1:3,8 female through-shaft	£353.75
39 - 96001-6/27	Reduction gear gr.3 SAE A dia.25 R.1:3,8 female through-shaft	£353.75

96002 SPEED REDUCTION GEARBOX

FLOWFIT

PART NO.	DESCRIPTION OF REDUCTION GEARBOX	PRICE
39 - 96002-1	Reduction gear gr.3 SAE A-SAE 6B R.1:1,5	£379.96
39 - 96002-2	Reduction gear gr.3 SAE A-SAE 6B R.1:2	£379.96
39 - 96002-3	Reduction gear gr.3 SAE A-SAE 6B R.1:2,5	£353.75
39 - 96002-4	Reduction gear gr.3 SAE A-SAE 6B R.1:3	£353.75
39 - 96002-5	Reduction gear gr.3 SAE A-SAE 6B R.1:3,5	£353.75
39 - 96002-6	Reduction gear gr.3 SAE A-SAE 6B R.1:3,8	£353.75

96003 SPEED REDUCTION GEARBOX

FLOWFIT

PART NO.	DESCRIPTION OF REDUCTION GEARBOX	PRICE
39 - 96003-1	Reduction gear gr.3 SAE A dia.25,4 R.1:1,5	£379.96
39 - 96003-2	Reduction gear gr.3 SAE A dia.25,4 R.1:2	£379.96
39 - 96003-3	Reduction gear gr.3 SAE A dia.25,4 R.1:2,5	£353.75
39 - 96003-4	Reduction gear gr.3 SAE A dia.25,4 R.1:3	£353.75
39 - 96003-5	Reduction gear gr.3 SAE A dia.25,4 R.1:3,5	£353.75
39 - 96003-6	Reduction gear gr.3 SAE A dia.25,4 R.1:3,8	£353.75

96004 SPEED REDUCTION GEARBOX

FLOWFIT

PART NO.	DESCRIPTION OF REDUCTION GEARBOX	PRICE
39 - 96004-1	Reduction gear gr.3 SAE A 35X31 R.1:1,5	£379.96
39 - 96004-2	Reduction gear gr.3 SAE A 35X31 R.1:2	£379.96
39 - 96004-3	Reduction gear gr.3 SAE A 35X31 R.1:2,5	£353.75
39 - 96004-4	Reduction gear gr.3 SAE A 35X31 R.1:3	£353.75
39 - 96004-5	Reduction gear gr.3 SAE A 35X31 R.1:3,5	£353.75
39 - 96004-6	Reduction gear gr.3 SAE A 35X31 R.1:3,8	£353.75

96005 SPEED REDUCTION GEARBOX

FLOWFIT

PART NO.	DESCRIPTION OF REDUCTION GEARBOX	PRICE
39 - 96005-1	Reduction gear gr.3 SAE B 35X31 R.1:1,5	£379.96
39 - 96005-2	Reduction gear gr.3 SAE B 35X31 R.1:2	£379.96
39 - 96005-3	Reduction gear gr.3 SAE B 35X31 R.1:2,5	£353.75
39 - 96005-4	Reduction gear gr.3 SAE B 35X31 R.1:3	£353.75
39 - 96005-5	Reduction gear gr.3 SAE B 35X31 R.1:3,5	£353.75
39 - 96005-6	Reduction gear gr.3 SAE B 35X31 R.1:3,8	£353.75

50% OFF ALL PRICES

97500 SERIES CAST IRON SPEED REDUCTION GEARBOXES

GROUP 2 • SAE 'A' • 18KW

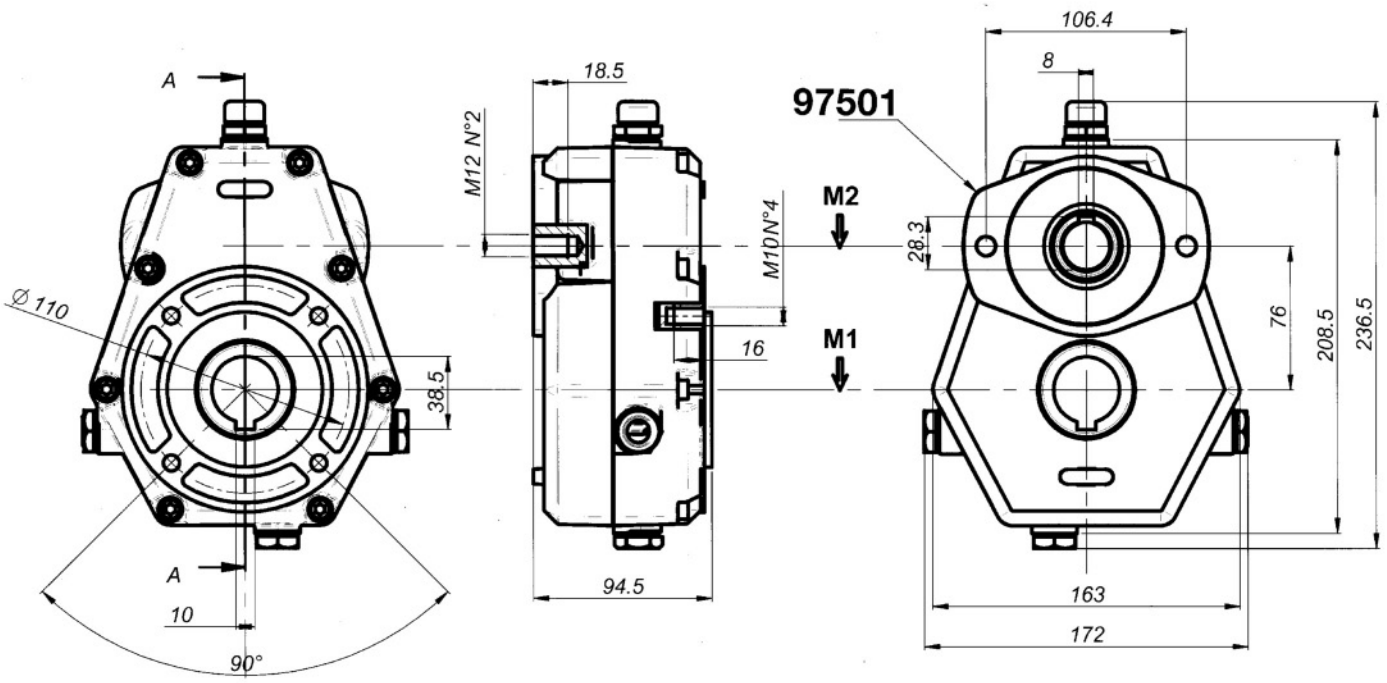

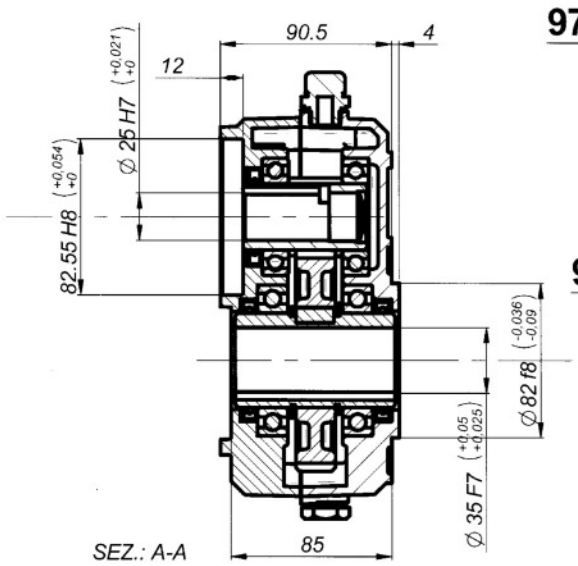

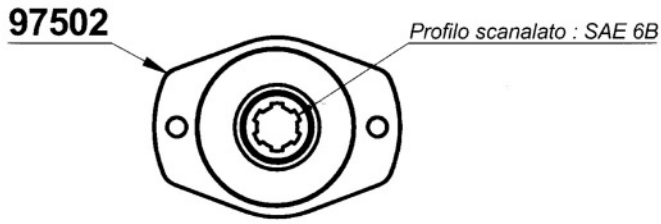

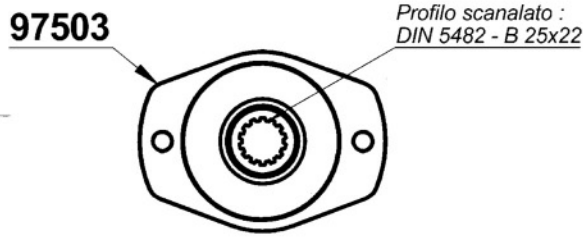

MAX OIL LEVEL 022 LITRE

M1 MAXIMUM CONTINUOUS TORQUE OF THE SPEED INCREASER (Input side daNm)	M2 MAXIMUM TORQUE OF THE SPEED INCREASER (Output side daNm)	N1 OUTPUT SPEED AFTER REDUCTION RPM	N2 INPUT SPEED BEFORE REDUCTION RPM	I RATIO OF SPEED REDUCTION ON N2 = N1	MAX TRANSMITTABLE POWER KW	WEIGHT KG
24,7	16,5	200	300	1,5	18	10
32,4	16,2	200	400	2	18	10
38,7	15,5	200	500	2,5	18	10
24,0	8,0	200	600	3	18	10
25,5	7,5	200	680	3,5	18	10
26,6	7,0	200	760	3,8	18	10

FACTORY PREFIX
69

SPEED REDUCTION GEARBOX
97501
97502
97503

RATIO AVAILABLE
1,5
2
2,5
3
3,5
3,8

97501 SPEED REDUCTION GEARBOX

FLOWFIT

PART NO.	DESCRIPTION OF REDUCTION GEARBOX	PRICE
69 - 97501-1	Reduction gear gr.2 cast iron SAE A R.1:1,5	£419.27
69 - 97501-3	Reduction gear gr.2 cast iron SAE A R.1:2,5	£419.27
69 - 97501-4	Reduction gear gr.2 cast iron SAE A R.1:3	£419.27

97502 SPEED REDUCTION GEARBOX

FLOWFIT

PART NO.	DESCRIPTION OF REDUCTION GEARBOX	PRICE
69 - 97502-1	Reduction gear gr.2 cast iron SAE A-6B R.1:1,5	£419.27
69 - 97502-2	Reduction gear gr.2 cast iron SAE A-6B R.1:2	£419.27
69 - 97502-3	Reduction gear gr.2 cast iron SAE A-6B R.1:2,5	£419.27
69 - 97502-4	Reduction gear gr.2 cast iron SAE A-6B R.1:3	£419.27
69 - 97502-4/1	Reduction gear gr.2 cast iron SAE A-6B R.1:3 female through shaft	£419.27
69 - 97502-5	Reduction gear gr.2 cast iron SAE A-6B R.1:3,5	£419.27
69 - 97502-6	Reduction gear gr.2 cast iron SAE A-6B R.1:3,8	£419.27

97503 SPEED REDUCTION GEARBOX

FLOWFIT

PART NO.	DESCRIPTION OF REDUCTION GEARBOX	PRICE
69 - 97503-1	Reduction gear gr.2 cast iron SAE A T14 R.1:1,5	£419.27
69 - 97503-2	Reduction gear gr.2 cast iron SAE A T14 R.1:2	£419.27
69 - 97503-3	Reduction gear gr.2 cast iron SAE A T14 R.1:2,5	£419.27
69 - 97503-4	Reduction gear gr.2 cast iron SAE A T14 R.1:3	£419.27
69 - 97503-5	Reduction gear gr.2 cast iron SAE A T14 R.1:3,5	£419.27
69 - 97503-6	Reduction gear gr.2 cast iron SAE A T14 R.1:3,8	£419.27

97003 CAST IRON SPEED REDUCTION GEARBOX

FLOWFIT

GROUP 3 • SAE 'B' • 37KW

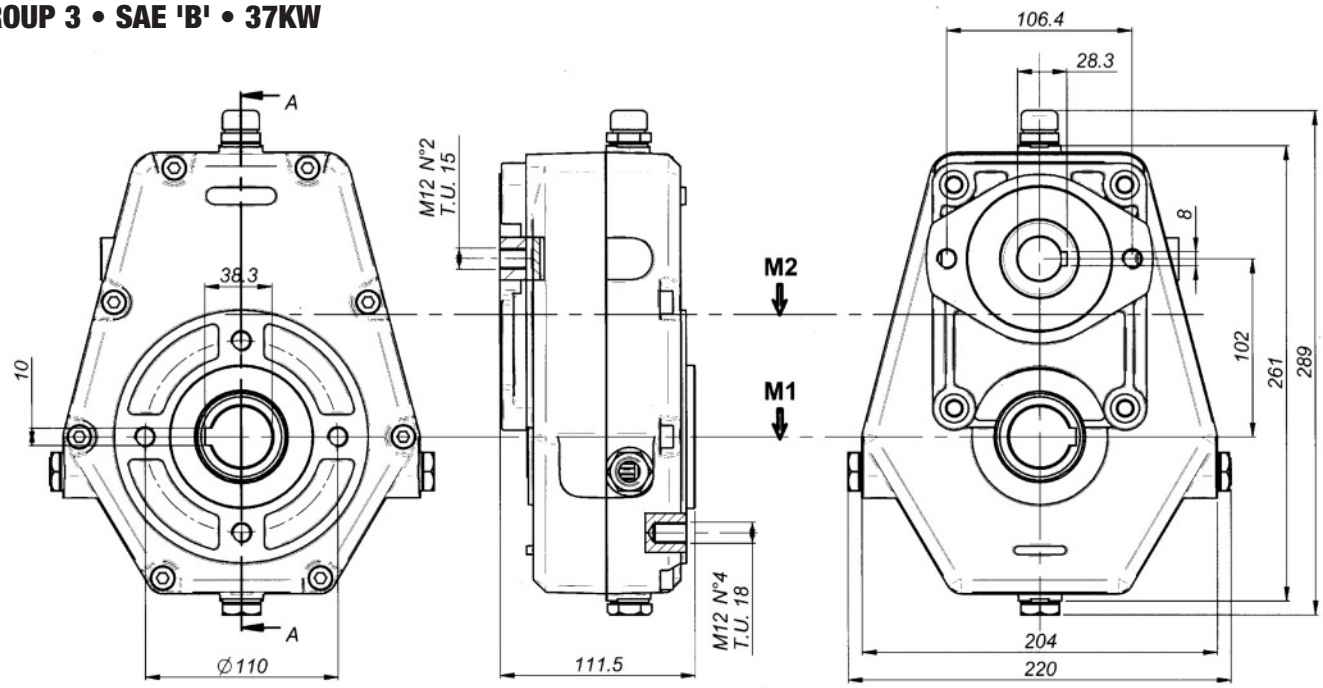

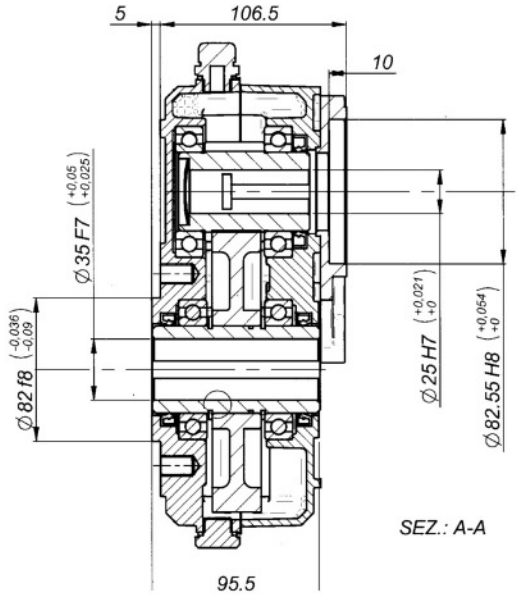

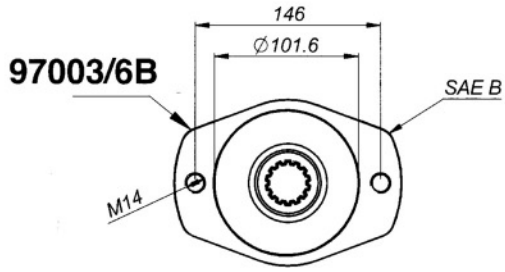

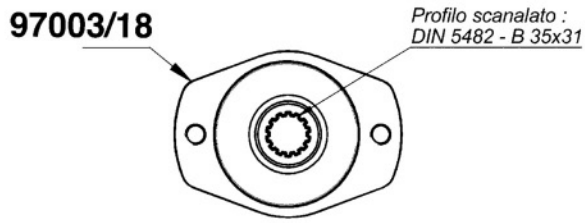

MAX OIL LEVEL 0.52 LITRE

M1 MAXIMUM CONTINUOUS TORQUE OF THE SPEED INCREASER (Input side daNm)	M2 MAXIMUM TORQUE OF THE SPEED INCREASER (Output side daNm)	N1 OUTPUT SPEED AFTER REDUCTION RPM	N2 INPUT SPEED BEFORE REDUCTION RPM	I RATIO OF SPEED REDUCTION ON N2 = N1	MAX TRANSMITTABLE POWER KW	WEIGHT KG
66	66	540	540	1	37	14.5
66	44	540	810	1.5	37	14.5
66	33	540	1080	2	37	14.5
66	26.4	540	1408	2.5	37	14.5
66	22	540	1620	3	37	14.5
66	18	540	1836	3.5	35	14.5
66	16.6	540	2057	3.8	35	14.5

FACTORY PREFIX
40

SPEED REDUCTION GEARBOX
97003/18
97003/6B

RATIO AVAILABLE
1
1,5
2
2,5
3
3,5
3,8

PART NO.	DESCRIPTION OF REDUCTION GEARBOX	PRICE
40-97003/6B	CAST IRON SPEED REDUCTION GEARBOX	£535.88
40-97003/18	CAST IRON SPEED REDUCTION GEARBOX	£512.29

97001 CAST IRON SPEED REDUCTION GEARBOX

FLOWFIT

GROUP 3 • SAE 'A' • 68KW

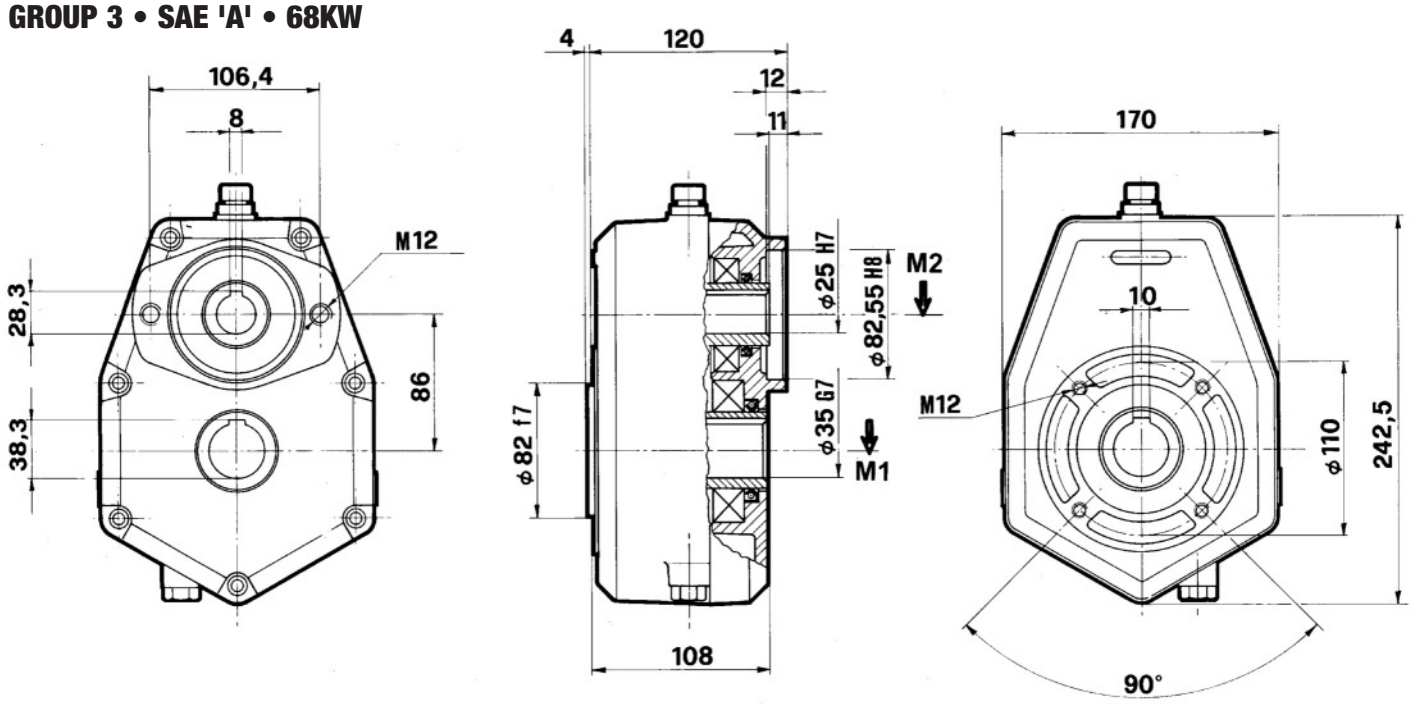

MAX OIL LEVEL 0.30 LITRE

M1 MAXIMUM CONTINUOUS TORQUE OF THE SPEED INCREASER (Input side daNm)	M2 MAXIMUM TORQUE OF THE SPEED INCREASER (Output side daNm)	N1 OUTPUT SPEED AFTER REDUCTION RPM	N2 INPUT SPEED BEFORE REDUCTION RPM	I RATIO OF SPEED REDUCTION ON N2 = N1	MAX TRANSMITTABLE POWER KW	WEIGHT KG
58	58	200	200	1	68	16
82.5	55	200	300	1.5	68	16
98	49	200	400	2	68	16
112.5	45	200	500	2.5	68	16
132	44	200	600	3	68	16
122.5	35	200	680	3.5	68	16
110.2	29	200	760	3.8	68	16

FACTORY PREFIX
40

SPEED REDUCTION GEARBOX
97001

RATIO AVAILABLE
1
1,5
2
2,5
3
3,5
3,8

PART NO.	DESCRIPTION OF REDUCTION GEARBOX	PRICE
97001/13	CAST IRON SPEED REDUCTION GEARBOX	£512.29
97001/15	CAST IRON SPEED REDUCTION GEARBOX	£512.29

50% OFF ALL PRICES

97001/13 – 97001/15 CAST IRON SPEED REDUCTION GEARBOX

GROUP 3 • SAE 'B' • 68KW

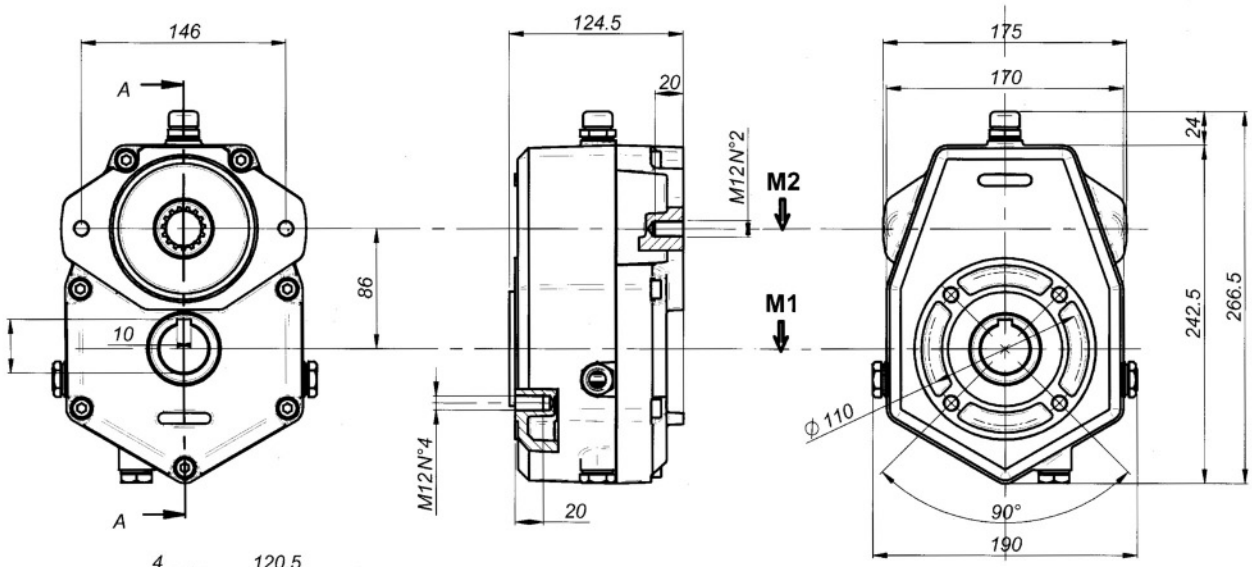

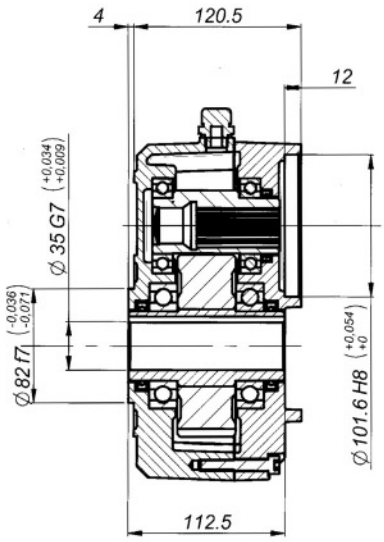

SEZ.: A-A

97001/13
Profilo : Z 13 SAE 16/32"

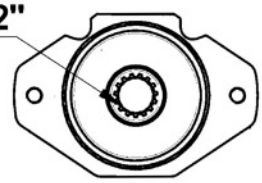

97001/15
Profilo : Z 15 SAE 16/32"

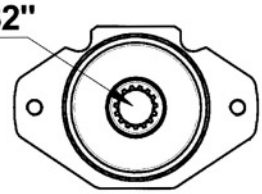

MAX OIL LEVEL 0.3 LITRE

M1 MAXIMUM CONTINUOUS TORQUE OF THE SPEED INCREASER (Input side daNm)	M2 MAXIMUM TORQUE OF THE SPEED INCREASER (Output side daNm)	N1 OUTPUT SPEED AFTER REDUCTION RPM	N2 INPUT SPEED BEFORE REDUCTION RPM	I RATIO OF SPEED REDUCTION ON N2 = N1	MAX TRANSMITTABLE POWER KW	WEIGHT KG
58	58	200	200	1	68	16
82.5	55	200	300	1.5	68	16
98	49	200	400	2	68	16
112.5	45	200	500	2.5	68	16
132	44	200	600	3	68	16
122.5	35	200	680	3.5	68	16
110.2	29	200	760	3.8	68	16

FACTORY PREFIX

SPEED REDUCTION GEARBOX
97001/13
97001/15

RATIO AVAILABLE
1
1,5
2
2,5
3
3,5
3,8

PART NO.	DESCRIPTION OF REDUCTION GEARBOX	PRICE
97001/13	CAST IRON SPEED REDUCTION GEARBOX	£513.60
97001/15	CAST IRON SPEED REDUCTION GEARBOX	£513.60

SPLINED COUPLINGS

SPLINED COUPLINGS SERIES 10000 499
SPLINED COUPLINGS SERIES 10500 502
SPLINED COUPLINGS SERIES 13000 503
SPLINED COUPLINGS SERIES 35000 WITH DIN 5482 AND SAE STANDARDS.....504
SPLINED COUPLINGS SERIES 15000 505
SPLINED SLEEVES.....506
SPLINED COUPLINGS SERIES 34100 507
SPLINED HALF COUPLINGS 34200 - 34300 34400-35500.....508
SPLINED HALF COUPLINGS 35550 509
SPLINED SLEEVES SERIES 10200-10300-10400.....510
SPLINED BARS SERIES 14000.....511
COMPLETE CHAIN TYPE COUPLINGS SERIES 16800.....512
ENGINE HALF COUPLINGS SERIES 16200.....513
GEARBOX HALF-COUPLINGS SERIES 16000 514
COMPLETE CHAIN TYPE COUPLINGS SERIES 12800.....515
SPLINED HALF-COUPLINGS SERIES 1200 - FLANGE COUPLINGS SERIES 12200.....516
COMPLETE SPLINED COUPLINGS SERIES 11400 517
HALF-COUPLINGS SERIES 11000 - SLEEVES SERIES 11200 518

Splined half-couplings, bars, couplings and chain couplings are made of heat-treated steel UNI 16 CrNi4/Pb.

Half couplings marked with (*) are made of hardened and tempered steel UNI 38 NiCrMo4/Fb and subjected to nitriding with mechanical resistance R=95 to 105 Kg/mm^2

FLOWFIT

50% OFF ALL PRICES

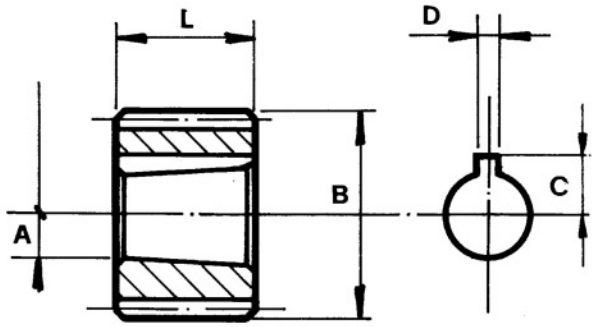

1:8 TAPER PUMP CONNECTION

Code	European Pump Group	Pump Assembly	Profile DIN 5482 B	No. of teeth	A	B	C	D	L	List £ each
01-10001	1	1	20 x 17	12	8	19,5	5,7	2,4	14,5	£8.89
01-10002	0,5	2/0,5	20 x 17	12	6	19,5	4	2	7	£11.50
01-10003	1	2/1	25 x 22	14	8	24,5	5,7	2,4	14,5	£7.55
01-10004	0,5	2/1	25 x 22	14	6	24,5	4	2	9	£11.50
01-10033	1	2/1	25 x 22	14	12	24,5	8,5	3	16	£7.55
*01-10005	2	2	25 x 22	14	14,2	24,5	9,3	3,17	22	£6.52
*01-10026	2	2	25 x 22	14	14,5	24,5	9,1	4	22,5	£6.52
01-10007	2	2	28 x 25	15	14,2	27,5	9,7	3,17	22	£9.96
01-10035	2	2	28 x 25	15	14,5	27,5	9,7	4	22,5	£9.96
01-10036	1	2,5/1	32 x 28	17	8	31,5	5,7	2,4	14,5	£14.30
01-10039	1	2,5/1	32 x 28	17	12	31,5	8,5	3	16	£14.30
01-10008	2	2,5/2	32 x 28	17	14,2	31,5	9,7	3,17	22	£13.81
01-10040	2	2,5/2	32 x 28	17	14,5	31,5	9,7	4	22,5	£12.34
01-10009	2,5	2,5	32 x 28	17	18,7	31,5	11,6	4	26	£12.41
01-10010	1	3/1	35 x 31	18	8	34,5	5,7	2,4	14,5	£15.29
01-10043	1	3/1	35 x 31	18	12	34,5	8,5	3	16	£15.27
01-10012	2	3/2	35 x 31	18	14,2	34,5	9,7	3,17	22	£8.55
01-10044	2	3/2	35 x 31	18	14,5	34,5	9,7	4	22,5	£7.25
*01-10014	3	3	35 x 31	18	18,7	34,5	12,5	4	26	£7.66
01-10046	1	3,5/1	35 x 31	20	8	39,5	5,7	2,4	14,5	£17.46
01-10049	1	3,5/1	40 x 36	20	9,7	39,5	6,7	3	16	£17.46
01-10050	1	3,5/1	40 x 36	20	12	39,5	8,5	3	16	£17.46
01-10015	2	3,5/2	40 x 36	20	14,2	39,5	9,7	3,17	22	£14.02
01-10051	2	3,5/2	40 x 36	20	14,5	39,5	9,7	4	22,5	£14.02
01-10016	3	3,5/3	40 x 36	20	18,7	39,5	12,5	4	26	£11.76
01-10017	3,5	3,5	40 x 36	20	21,2	39,5	15,1	4,76	32	£11.76
01-10052	3,5	3,5	40 x 36	20	23,7	39,5	15	6	38	£11.76

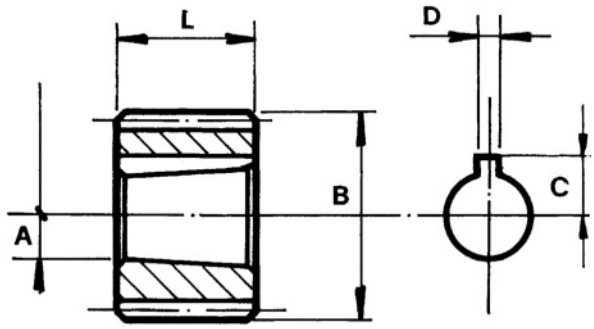

1:8 TAPER PUMP CONNECTION

Code	European Pump Group	Pump Assembly	Profile DIN 5482 B	No. of teeth	A	B	C	D	L	List £ each
01-10023	1	4/1	48 x 44	23	8	47,5	5,7	2,4	14,5	£12.27
01-10055	1	4/1	48 x 44	23	12	47,5	8,5	3	16	£18.47
01-10018	2	4/2	48 x 44	23	14,2	47,5	9,7	3,17	22	£15.87
01-10056	2	4/2	48 x 44	23	14,5	47,5	9,7	4	22,5	£17.25
01-10019	3	4/3	48 x 44	23	18,7	47,5	12,5	4	26	£14.47
01-10020	3,5	4/3,5	48 x 44	23	21,2	47,5	15,1	4,76	32	£17.25
01-10057	3,5	4/3,5	48 x 44	23	21,2	47,5	15,1	5	32	£17.25
01-10058	3,5	4/3,5	48 x 44	23	23,7	47,5	15	6	38	£17.25
01-10021	4	4	48 x 44	23	27,7	47,5	18,7	6,35	42	£16.11
01-10059	4	4	48 x 44	23	27,7	47,5	19,4	7	42	£16.11
01-10060	2	5/2	58 x 53	27	14,2	57,5	9,7	3,17	22	£16.11
01-10061	2	5/2	58 x 53	27	14,5	57,5	9,7	4	22,5	£39.64
01-10062	3	5/3	58 x 53	27	18,7	57,5	12,5	4	26	£39.64
01-10063	3,5	5/3,5	58 x 53	27	21,2	57,5	15,1	4,76	32	£45.45
01-10064	3,5	5/3,5	58 x 53	27	21,2	57,5	15,1	5	32	£45.45
01-10065	3,5	5/3,5	58 x 53	27	23,7	57,5	15	6	38	£42.19
01-10066	4	5/4	58 x 53	27	27,7	57,5	18,7	6,35	42	£42.19
01-10067	4	5/4	58 x 53	27	27,7	57,5	19,4	7	42	£42.19
01-10068	2	6/2	72 x 66	33	14,2	71,3	9,7	3,17	22	£48.53
01-10069	2	6/2	72 x 66	33	14,5	71,3	9,7	4	22,5	£48.53
01-10070	3	6/3	72 x 66	33	18,7	71,3	12,5	4	26	£48.78
01-10071	3,5	6/3,5	72 x 66	33	21,2	71,3	15,1	4,76	32	£48.78
01-10072	4	6/4	72 x 66	33	27,7	71,3	18,7	6,35	42	£51.40
01-10073	3	7/3	80 x 74	36	18,7	79,3	12,5	4	26	£65.01
01-10074	3,5	7/3,5	80 x 74	36	21,2	79,3	15,1	4,76	32	£65.01
01-10075	4	7/4	60 x 74	36	27,7	79,3	18,7	6,35	42	£65.01
01-10076	3	8/3	100 x 94	44	18,7	99,3	12,5	4	26	£65.01
01-10077	3,5	8/3,5	100 x 94	44	21,2	99,3	15,1	4,76	32	£73.86
01-10078	4	8/4	100 x 94	44	27,7	99,3	18,7	6,35	42	£73.86

50% OFF ALL PRICES

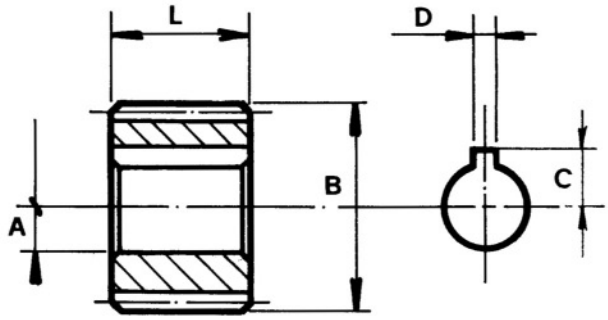

PARALLEL/CYLINDRICAL BORE

Code	European Pump Group	Pump Assembly	Profile DIN 5482 B	No. of teeth	A	B	C	D	L	List £ each
01-10027	0,5	1/0,5	20 x 17	12	6	19,5	4	2	9	£7.34
01-10028	9,5	1/0,6	20 x 17	12	7	19,5	4,6	2	9	£7.39
01-10029	1	1	20 x 17	12	12	19,5	7,6	3	13,5	£7.39
01-10030	0,5	2/0,5	25 x 22	14	6	24,5	4	2	9	£8.87
01-10031	0,5	2/0,6	25 x 22	14	7	24,5	9	2	4,6	£8.87
01-10032	1	2/1	25 x 22	14	12	24,5	7,6	3	13,5	£8.87
01-10034	2	2	25 x 22	14	15	24,5	8,4	4	31	£8.87
01-10037	1	2.5/1	32 x 28	17	12	31,5	7,6	3	13,5	£10.23
01-10041	3	2,5/3	32 x 28	17	20	31,5	11,8	5	41	£10.23
01-10042	1	3/1	35 x 31	18	12	34,5	7,6	3	13,5	£11.12
01-10045	2	3/2	35 x 31	18	15	34,5	9,2	4	31	£11.12
01-10047	3	3	35 x 31	18	20	34,5	11,8	5	41	£27.49
01-10048	1	3,5/1	40 x 36	20	12	39,5	7,6	3	13,5	£11.84
01-10053	1	4/1	48 x 44	23	12	47,5	7,6	3	13,5	£14.76

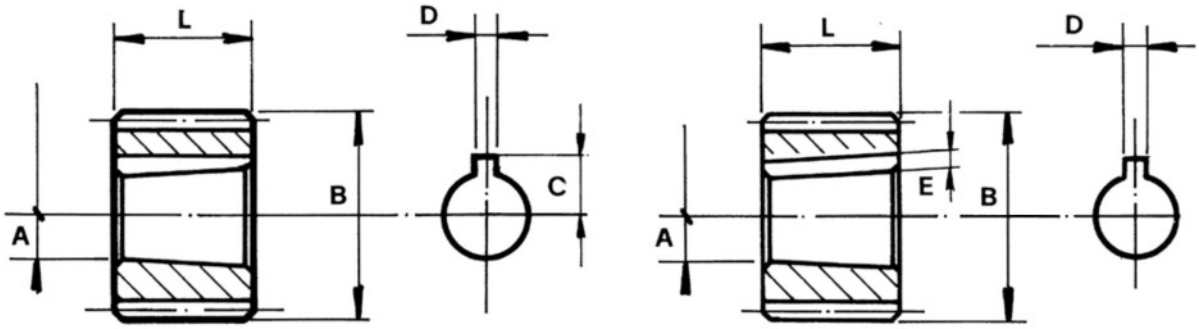

1:5 TAPER PUMP CONNECTION

Code	Pump type	Pump Assembly	Profile DIN 5482 B	No. of teeth	A	B	C	D	E	L	List £ each
01-10501	A	1	20 x 17	12	7,6	19,5		2	1	12	£11.85
01-10502	A	2/1	25 x 22	14	8	24,5		2	1	10	£11.85
01-*10503	B	2	25 x 22	14	13	24,5	9,2	3		20	£11.85
01-10504	B	2	28 x 25	15	13	27,5		3	1,9	20	£13.00
01-10505	A	2,5/1	32 x 28	17	8	31,5		2	1,9	20	£13.00
01-10506	B	2,5/2	32 x 28	17	13,2	31,5		3	1,9	20	£13.00
01-10518	C	2,5	32 x 28	17	15,2	31,5		4	2,1	24	£14.80
01-10507	B	3/2	35 x 31	18	13	34,5		3	1,9	20	£14.80
01-*10508	D	3	35 x 31	18	19,6	34,5	13,7	5		25	£15.97
01-10509	B	3,5/2	40 x 36	20	13,2	39,5		3	1,9	20	£21.32
01-10510	C	3,5/2,5	40 x 36	20	15,2	39,5		4	2,1	24	£22.13
01-10519	D	3,5/3	40 x 36	20	19,6	39,5		5	2,5	25	£21.66
01-10511	B	4/2	48 x 44	23	13,2	47,5		3	1,9	20	£21.66
01-10512	C	4/2,5	48 x 44	23	15,2	47,5		4	2,1	24	£53.39
01-10513	D	4/3	48 x 44	23	19,6	47,5		5	2,5	25	£53.39
01-10514	Gruppo 4	4	48 x 44	23	24	47,5		6	2,5	32	£
01-10520	B	5/2	58 x 53	27	13,2	57,5		3	1,9	20	£
01-10515	C	5/2,5	58 x 53	27	15,2	57,5		4	2,1	24	£23.88
01-10516	D	5/3	58 x 53	27	19,6	57,5		5	2,5	25	£
01-10521	Gruppo 4	5/4	58 x 53	27	23,6	57,5		6	2,5	32	£
01-10517	D	6/3	72 x 66	33	19,6	71,3		5	2,5	25	£
01-10522	Gruppo 4	6/4	72 x 66	33	23,6	71,3		6	2,5	32	£61.00
01-10523	D	7/3	80 x 74	36	19,6	79,3		%	2,5	25	£
01-10524	Gruppo 4	7/4	80 x 74	36	23,6	79,3		6	2,5	32	£

	BOSCH	KRACHT	HPI
A	HY/ZBR/1. HY/ZBS...	KP02/FK	
B	HY/ZFS.... HY/ZFS...204 HY/ZFR/1.... HY/ZFR/1.104	KP12/FK K12/FL KP12/GK	2000 CB1
C	HY/KVE.... HY/MZFR.... HY/ZFR/2.... HY/ZFBR/2		
D	HY/ZGFS.... HY/MZGS.... HY/ZGR.... HY/ZGS....	KP22/FL	3000 DB1 3000 CB1

50% OFF ALL PRICES

SPLINED COUPLINGS SERIES 13000

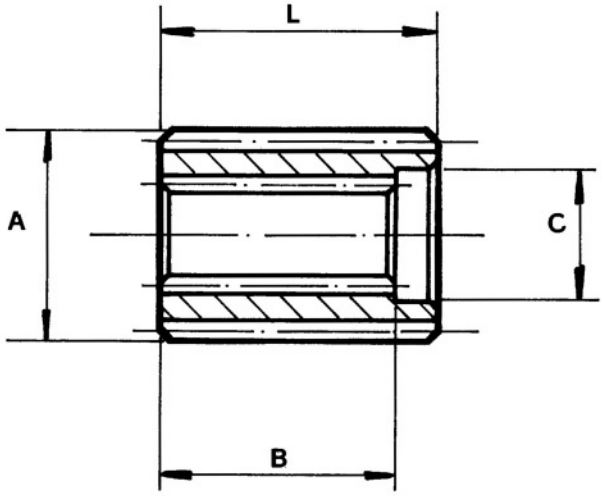

INTERNALLY DIN 5428B SPLINED COUPLINGS

Code	Pump type	External profile DIN 5482A	No. of teeth	Internal profile DIN 5482B	No. of teeth	A	B	C	L	List £ each
01-13001	20-35	48 x 44	23	25 x 22	14	47,5	35	25	40	£38.67
01-13002	50	48 x 44	23	30 x 27	16	47,5	38	30,5	43	£38.67
01-13003	75	48 x 44	23	35 x 31	18	47,5	42	35,5	46	£38.67
01-13004	50	58 x 53	27	30 x 27	16	57,5	38	30,5	43	£62.85
01-13005	75	58 x 53	27	35 x 31	18	57,5	42	35,5	46	£62.85
01-13006	105	58 x 53	27	40 x 36	20	57,5	47	40,5	52	£62.85
01-13007	140	58 x 53	27	45 x 41	22	57,5	56	45	62	£62.85
01-13008	105	72 x 66	33	40 x 36	20	71,3	47	40,5	52	£80.58
01-13009	140	72 x 66	33	45 x 41	22	71,3	56	45	62	£80.58
01-13010	186	72 x 66	33	50 x 45	24	71,3	61	50	68	£80.58

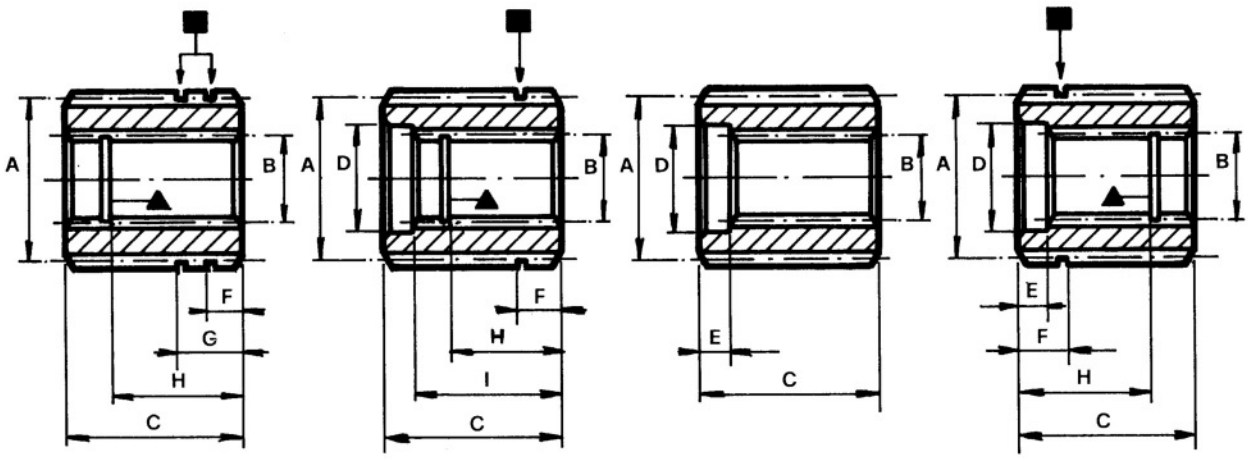

Assembly type	Code No.	A		B		B		C	D	E	F	G	H	I	▲	■	List £ each
		DIN 5482	No. of teeth	DIN 5482	No. of teeth	SAE	No. of teeth										
01-3 C	**35001**	35 × 31	18	25 × 22	14			26									£25.79
01-3,5 C	**35002**	40 × 36	20	30 × 27	16			43	30,5	5							£45.97
01-4 C	**35003**	48 × 44	23	25 × 22	14			40	25	5							£72.28
01-4 C	**35004**	48 × 44	23	30 × 27	16			43	30,5	5							£72.28
01-4 C	**35005**	48 × 44	23	35 × 31	18			44	35,5	2							£82.88
01-5 C	**35006**	58 × 53	27	30 × 27	16			43	30,5	5							£82.88
01-5 C	**35007**	58 × 53	27	35 × 31	18			46	35,5	4							£74.19
01-5 C	**35008**	58 × 53	27	40 × 36	20			52	40,5	5							£82.88
01-5 C	**35009**	58 × 53	27	45 × 41	22			62	34	6							£82.88
01-6 C	**35010**	72 × 66	33	40 × 36	20			52	40,5	5							£99.44
01-6 C	**35011**	72 × 66	33	45 × 41	22			62	45	6							£99.44
01-6 C	**35012**	72 × 66	33	50 × 45	24			68	50	7							£99.44
01-3 A	**35501**	35 × 31	18			16/32''DP	13	35			5					34	£25.79
01-3 B	**35502**	35 × 31	18			16/32''DP	15	40	26		7		32	35	22	34	£35.80
01-3,5 A	**35503**	40 × 36	20			16/32''DP	13	35			5					40	£45.40
01-3,5 B	**35504**	40 × 36	20			16/32''DP	15	40	26		7		32	35	22	40	£55.64
01-4 D	**35505**	48 × 44	23			16/32''DP	13	46	23	10	3,5		41,5		19	48	£48.61
01-4 B	**35506**	48 × 44	23			16/32''DP	15	40	26		7		32	35	22	48	£46.68
01-4 A	**35507**	48 × 44	23			16/32''DP	21	50			6	20	40		32	48	£46.68
01-4 D	**35508**	48 × 44	23			12/24''DP	14	49	32,5	8	8	16	45,2		28	48	£76.73
01-5 B	**35509**	58 × 53	27			16/32''DP	21	73	38		30		40	47	32	58	£76.73
01-5 B	**35510**	58 × 53	27			16/32''DP	23	72	40		30		41	46	35	58	£82.88
01-5 D	**35511**	58 × 53	27			12/24''DP	14	49	32,5	8	8		45,2		28	58	£82.89

SPLINED COUPLINGS SERIES 15000

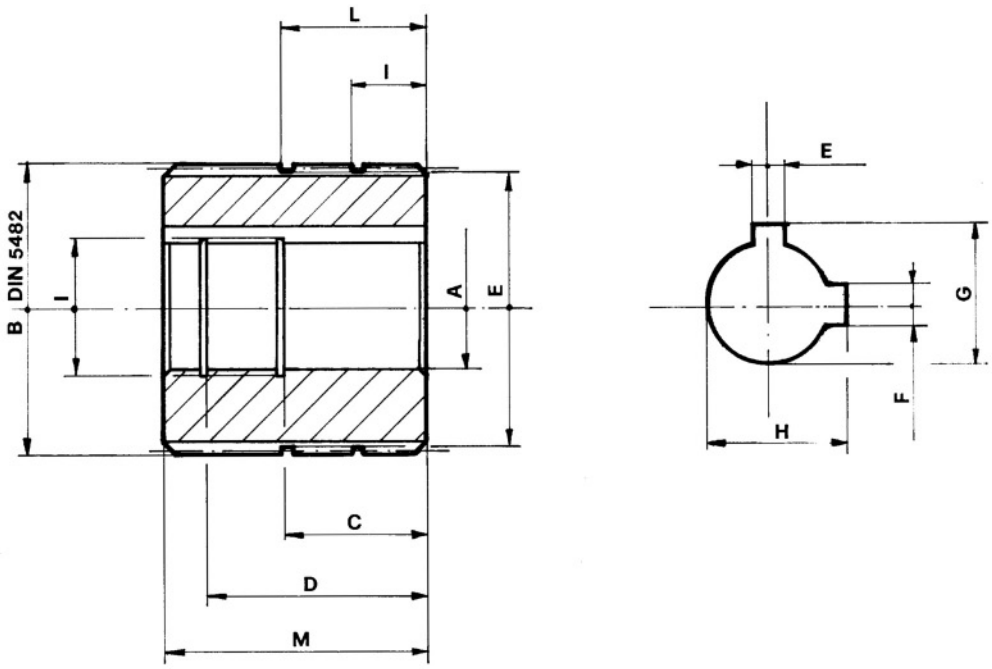

Code No.	Pump assembly	Profile	No. of teeth	I ∅	E ∅	A	B	C	D	E	F	G	H	I	L	M	List £ each
01-15001	A	35 × 31	18	19	34	19,05	34,5	26	41	4,8		21,2		13	27	48	£25.79
01-15002	B-C	35 × 31	18	22	34	22,22	34,5	26	40	4,8	6,4	24,5	25,2	14	27	48	£25.79
01-15003	A	40 × 36	20	19	40	19,05	39,5	23	36	4,8		21,2		9	13	41	£45.40
01-15004	B-C	40 × 36	20	22	40	22,22	39,5		32	4,8	6,4	24,5	25,2	4	10	45	£45.40
01-15005	A	48 × 44	23	22	48	19,05	47,5	26	40	4,8		21,2		8	25	49	£72.28
01-15006	B-C	48 × 44	23	22	48	22,22	47,5	26	42	4,8	6,4	24,5	25,2	8	25	50	£72.28
01-15007	D-E	48 × 44	23	32	48	31,75	47,5	41	55	6,4	8	34,6	35,3	8	20,5	60	£73.97
01-15008	B-C	58 × 53	27	22	58	22,22	57,5	26	42	4,8	6,4	24,5	25,2	8	25	50	£82.88
01-15009	D-E	58 × 53	27	32	58	31,75	57,5	41	55	6,4	8	34,6	35,3	8	20,5	60	£84.42

Marca pompa Marque pompe Pump make Pumpenhersteller	A	B	C	D	E
VICKERS	V100 V200	25V 30V	PVB 10		35V 45V
VICKERS	V10 V20		PVB 15		PVB 20/29
VICKERS	PFB 5/6		PFB 10		PFB 20/29
VICKERS	PVB 5/6				
DENISON	TMB	T3B	T3CB	T2D TDC	
DENISON		T1C		TDCB	

SPLINED SLEEVES

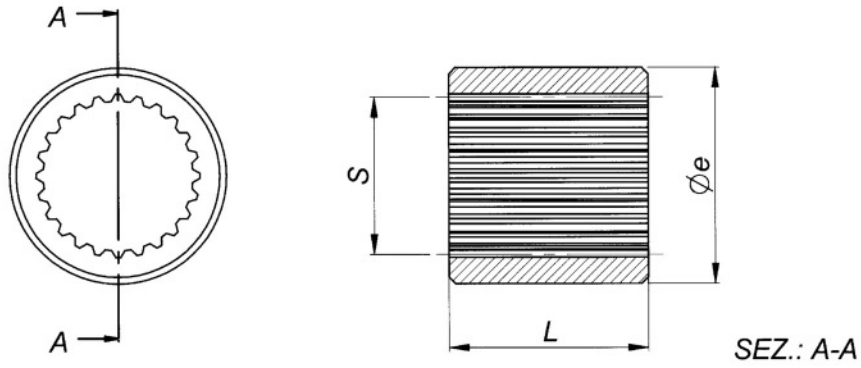

Code No.	No.of teeth	Splined shaft : S	Øe	L	List £ each
01-10600	9	A 14x17 -DIN 5482	25	25	£13.11
01-10601	9	A 17x14 - DIN 5482	30	30	£15.54
01-10602	14	A 25x22 - DIN 5482	40	50	£20.56
01-10603	15	A 28x25 - DIN 5482	40	50	£20.56
01-10604	16	A 30x27 - DIN 5482	45	60	£25.73
01-10605	18	A 35x31 - DIN 5482	50	60	£37.09
01-10606	20	A 40x36 - DIN 5482	55	60	£51.39
01-10607	23	A 48x44 - DIN 5482	65	65	£61.67
01-10608	24	A 50x45 - DIN 5482	65	60	£61.37
01-10609	27	A 58x53 - DIN 5482	75	60	£77.09
01-10610	29	A 62x57 - DIN 5482	80	70	£102.33
01-10611	32	A 70x64 - DIN 5482	90	70	£109.04
01-10700	9	16/32" DP	22	24	£13.11
01-10701	9	16/32" DP	30	30	£15.42
01-10702	11	16/32" DP	30	35	£15.42
01-10703	13	16/32" DP	35	40	£20.55
01-10704	15	16/32" DP	40	50	£61.67
01-10705	21	16/32" DP	55	60	£61.67
01-10706	23	16/32" DP	60	60	£52.69
01-10707	27	16/32" DP	65	60	£61.67
01-10708	12	12/24" DP	50	60	£61.67
01-10709	14	12/24" DP	55	60	£61.67
01-10710	17	12/24" DP	55	60	£61.67

Code No.	No.of teeth	Splined shaft : S	Øe	L	List £ each
01-10800	14	W20x1.25x14x9H DIN 5480	35	40	£25.73
01-10801	18	W25x1.25x18x9H DIN 5480	40	50	£37.09
01-10802	14	W30x2x14x9H DIN 5480	50	50	£51.37
01-10803	16	W35x2x16x9H DIN 5480	55	60	£61.67
01-10804	18	W40x2x18x9H DIN 5480	60	60	£61.67
01-10805	21	W45x2x21x9H DIN 5480	65	60	£77.09
01-10806	24	W50x2x24x9H DIN 5480	70	60	£77.09

50% OFF ALL PRICES

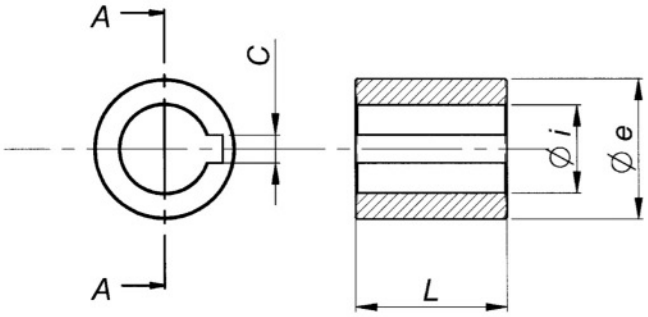

SEZ.: A-A

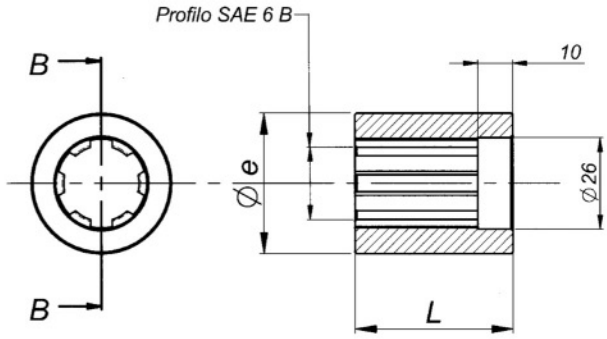

SEZ.: B-B

Code No.	Motor	Øe	Ø i	L	C	List £ each
01- 34100	DANFOSS	40	25	43	8	£31.49
01- 34101	DANFOSS	40	25	50	8	£29.67
01- 34104	DANFOSS	50	32	50	10	£55.83

Code No.	Motor	Øe	L		List £ each
01- 34105	DANFOSS	40	45		£30.75
01- 34106	DANFOSS	40	37		£25.03

SPLINED HALF COUPLINGS 34200 - 34300 34400-35500

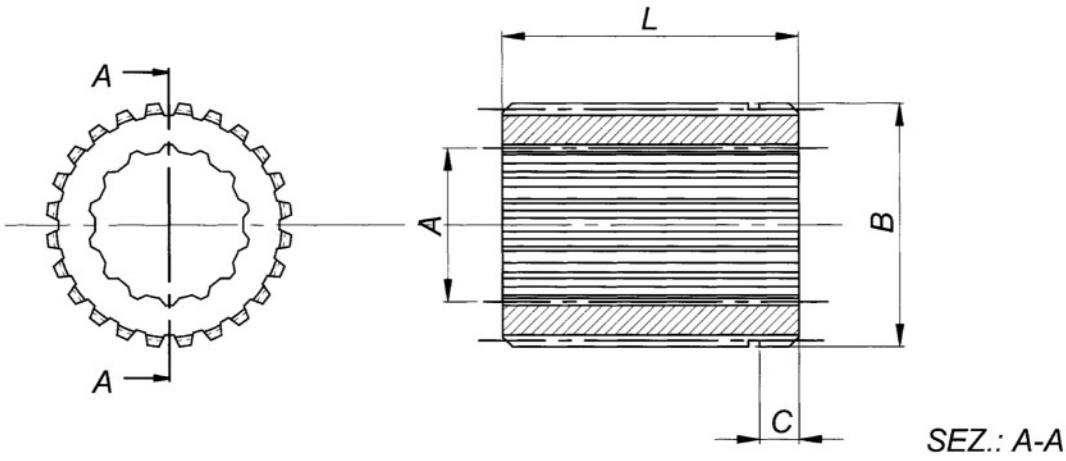

Code No.	No.of teeth exterior	Splined shaft exterior : B	No.of teeth inside	Splined shaft : A	L	C	List £ each
01-34200	20	B 40x36 - DIN 5482	14	12/24" DP	40	5	£43.61
01-34201	20	B 40x36 - DIN 5482	14	W30x2x14x9 H DIN 5480	40	5	£43.61
01-34300	24	B 50x45 - DIN 5482	14	W30x2x14x9H DIN 5480	40	8	£51.91
01-34301	24	B 50x45 - DIN 5482	16	W35x2x16x9H DIN 5480	40	8	£51.91
01-34302	24	B 50x45 - DIN 5482	18	W40x2x18x9H DIN 5480	40	8	£51.91
01-34400	24	B 50x45 - DIN 5482	9	16/32" DP	40	8	£51.91
01-34401	24	B 50x45 - DIN 5482	11	16/32" DP	40	8	£51.91
01-34402	24	B 50x45 - DIN 5482	13	16/32" DP	40	8	£51.91
01-34403	24	B 50x45 - DIN 5482	15	16/32" DP	40	8	£51.91
01-34404	24	B 50x45 - DIN 5482	21	16/32" DP	48	8	£51.91
01-34405	24	B 50x45 - DIN 5482	23	16/32" DP	48	8	£51.91
01-34406	24	B 50x45 - DIN 5482	14	12/24" DP	40	8	£51.91
01-35512	18	B 35x31 - DIN 5482	11	16/32" DP	40	5	£34.62
01-35513	18	B 35x31 - DIN 5482	9	16/32" DP	45	5	£34.62
01-35514	14	B 25x22 - DIN 5482	9	16/32" DP	20	5	£11.54
01-35516	23	B 48x44 - DIN 5482	23	16/32" DP	50	5	£46.11
01-35517	14	B 25x22 - DIN 5482	9	16/32" DP	30	5	£15.36
01-35519	18	B 35x31 - DIN 5482	9	16/32" DP	40	5	£34.62

SPLINED HALF COUPLINGS 35550

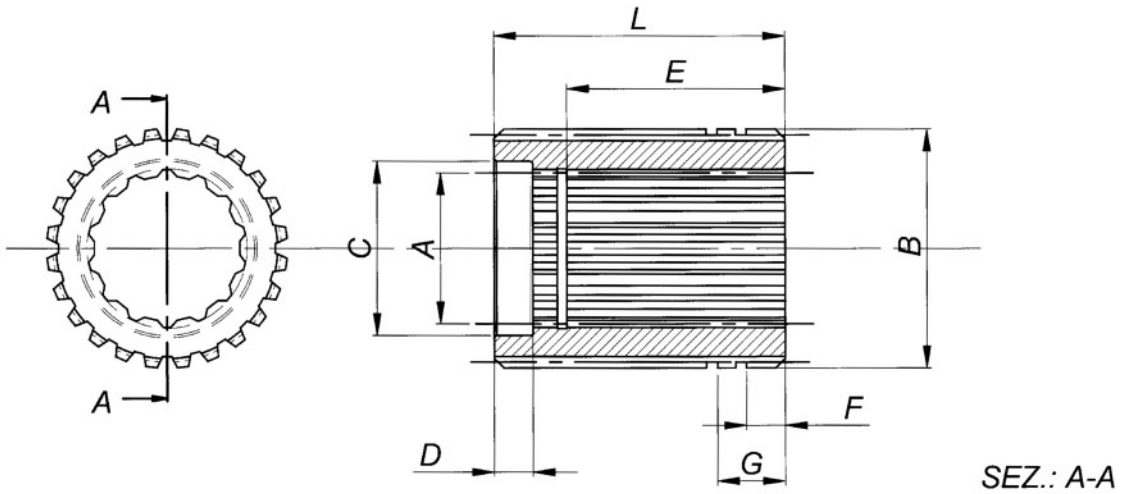

Code No.	No.of teeth exterior	Splined shaft exterior : B	No.of teeth inside	Splined shaft : A	L	C	D	E	F	G	List £ each
01-35550	18	B 35x31 - DIN 5482	18	N 25x1.25x18x11 H DIN 5480	50				5	13	£54.79
01-35551	23	B 48x44 - DIN 5482	18	N 25x1.25x18x11 H DIN 5480	48				5	13	£54.79
01-35552	23	B 48x44 - DIN 5482	14	N 30x2x14x11 H DIN 5480	48				6	18	£54.79
01-35553	23	B 48x44 - DIN 5482	16	N 35x2x16x11 H DIN 5480	50	38	6	40	6	18	£54.79
01-35554	27	B 58x53 - DIN 5482	16	N 35x2x16x11 H DIN 5480	49	36	8	43	5		£68.52
01-35555	27	B 58x53 - DIN 5482	18	N 40x2x18x11 H DIN 5480	52	41	8	48	6		£68.52
01-35556	20	B 48x44 - DIN 5482	18	N25x1.25x18x11 H DIN 5480					3		£34.60

SPLINED SLEEVES SERIES 10200-10300-10400

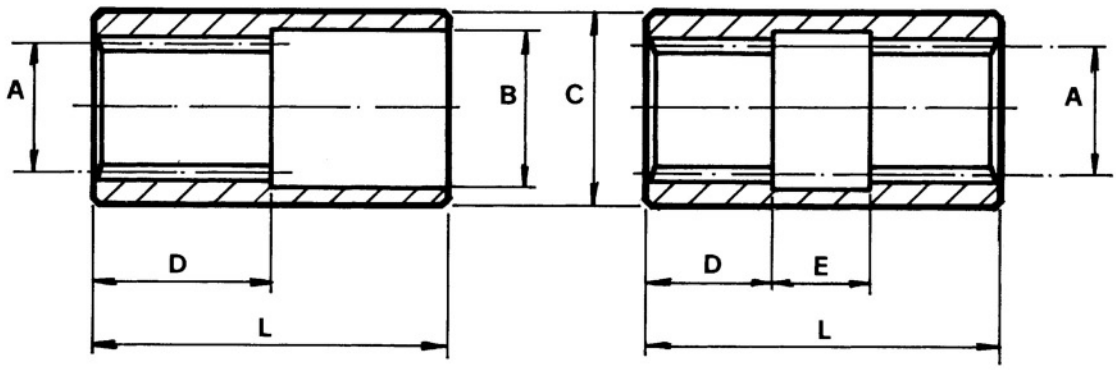

Code No.	Pump assembly	Profile	No. of teeth	A	B	C	D	E	L	List £ each
01-10201	1	20 × 17 DIN 5482	12	17	20,5	25	25		50	£8.70
01-10202	2	25 × 22 DIN 5482	14	22	25,5	32	30		60	£10.29
01-10203	2	28 × 25 DIN 5482	15	25	28,5	34	30		60	£10.94
01-10204	2,5	32 × 28 DIN 5482	17	28	33,5	39	30		60	£11.31
01-10205	3	35 × 31 DIN 5482	18	31	35,5	42	30		60	£11.49
01-10206	3,5	40 × 36 DIN 5482	20	36	40,5	49,5	33		66	£12.79
01-10207	4	48 × 44 DIN 5482	23	44	48,5	62	42		90	£22.22
01-10208	2 Doppio	25 × 22 DIN 5482	14	22		32	20	20	60	£21.75
01-10209	3 Doppio	35 × 31 DIN 5482	18	31		44	29,5	12	71	£25.06
01-10300		W25 × 1,25 × 18 × 9H DIN 5480	18		25,5	32	30		60	£10.74
01-10301		W30 × 2 × 14 × 9H DIN 5480	14		30,5	38	30		60	£11.30
01-10302		W35 × 2 × 16 × 9H DIN 5480	16		35,5	42	30		60	£11.64
01-10303		W40 × 2 × 18 × 9H DIN 5480	18		40,5	49,5	33		66	£12.91
01-10401		16/32'' DP	13		23	30	25		50	£10.37
01-10402		16/32'' DP	15		26	32	30		60	£10.37
01-10403		16/32'' DP	21		35,5	42	30		60	£11.64
01-10404		16/32'' DP	23		38,5	49	33		66	£12.91
01-10405		12/24'' DP	12		28,5	34	30		60	£11.18
01-10406		12/24'' DP	14		32,5	39	30		60	£11.30

50% OFF ALL PRICES

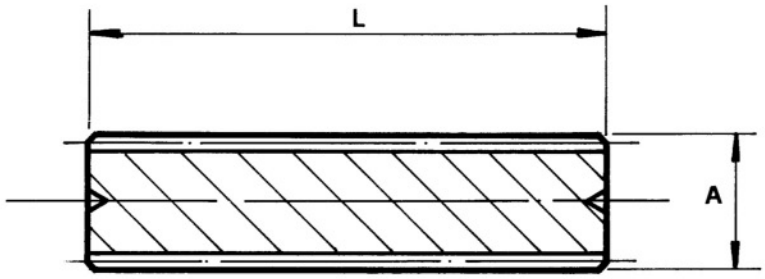

Toothing type DIN 5482B

Code No.	Profile	No. of teeth	A	L	List £ each
01-14001	20 × 17	12	19,5	300	£43.48
01-14002	22 × 19	13	21,5	300	£74.19
01-14003	25 × 22	14	24,5	300	£49.11
01-14004	28 × 25	15	27,5	300	£56.79
01-14005	30 × 27	16	29,5	300	£64.48
01-14006	32 × 28	17	31,5	300	£64.48
01-14007	35 × 31	18	34,5	300	£64.48
01-14008	40 × 36	20	39,5	300	£76.73
01-14009	45 × 41	22	44,5	300	£
01-14010	48 × 44	23	47,5	300	£84.42
01-14011	50 × 45	24	49,5	300	£86.97
01-14012	58 × 53	27	57,5	300	£99.77
01-14013	60 × 55	28	59,5	300	£
01-14014	70 × 64	32	69,5	300	£
01-14015	72 × 66	33	71,5	300	£128.93
01-14016	80 × 74	36	79,5	300	£180.49
01-14017	100 × 94	44	99,5	300	£219.18

N.B.: Splined bars can also be supplied as per SAE 16/32'' - 12/24'' and DIN 5480 profile.

COMPLETE CHAIN TYPE COUPLINGS SERIES 16800

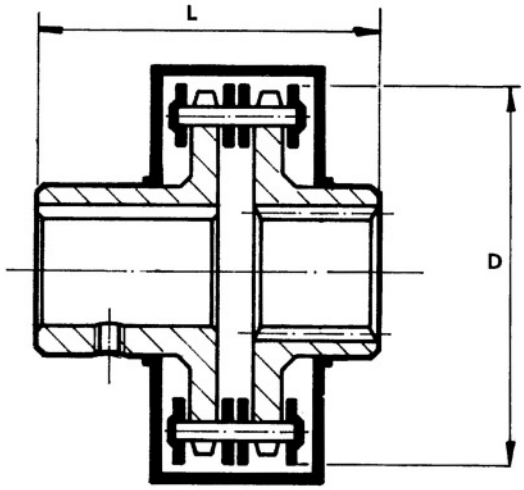

Max transmissible torque at 1500 r.p.m. Max angular misalignment 2°

Complete coupling Code No.	Splined half-coupling Code No.	Engine half-coupling Code No.	Chain Code No.	Link Code No.	Guard Code No.	HP	D	L	List £ each
01-16801 **C14**	16001	16201	16406	12503	12604	0,37	57	57,2	£47.28
01-16802 **C19**	16001	16202	12406	12503	12604	0,75	57	67,2	£47.28
01-16803 **C24/L**	16001	16203	12406	12503	12604	1,1	57	67,2	£47.28
01-16804 **C24/P**	16002	16204	12407	12501	12605	1,5	69	84,9	£60.76
01-16805 **C28**	16003	16205	12408	12501	12606	4	77	99,9	£67.53
01-16806 **C32**	16003	16206	12408	12501	12606	5	77	122	£84.42
01-16807 **C38/L**	16004	16207	12409	12501	12607	5,5	85	131,9	£87.80
01-16808 **C38/P**	16005	16208	12410	12502	12608	7,5	102	133,5	£165.46
01-16809 **C42/L**	16004	16209	12409	12501	12607	11	85	156,9	£94.53
01-16810 **C42/P**	16005	16210	12410	12502	12608	15	102	158,5	£165.46
01-16811 **C48/L**	16006	16211	12411	12501	12602	18,5	89	156,9	£101.31
01-16812 **C48/P**	16007	16212	12412	12502	12609	22	114	158,5	£222.87
01-16813 **C48/PI**	16008	16212	12412	12502	12609	22	114	158,5	£1,926.16
01-16814 **C55**	16007	16213	12412	12502	12609	30	114	158,5	£222.87
01-16815 **C55/I**	16008	16213	12412	12502	12609	30	114	158,5	£222.87
01-16816 **C60**	16009	16214	12404	12502	12603	37	138	183,5	£401.85
01-16817 **C60/1**	16010	16214	12404	12502	12603	37	138	183,5	£401.85
01-16818 **C60/2**	16011	16214	12404	12502	12603	45	138	183,5	£401.85
01-16819 **C65**	16009	16215	12404	12502	12603	55	138	203,5	£418.73
01-16820 **C65/I**	16010	16215	12404	12502	12603	55	138	203,5	£422.09
01-16821 **C65/2**	16011	16215	12404	12502	12603	55	138	203,5	£425.46
01-16822 **C75**	16012	16216	12405	12502	12610	75	162	203,5	£540.29
01-16823 **C75/I**	16013	16216	12405	12502	12610	75	162	203,5	£540.29
01-16824 **C75/2**	16014	16216	12405	12502	12610	90	162	203,5	£540.29
01-16825 **C80**	16015	16217	12413	12504	12611	132	167	216,1	£844.18

50% OFF ALL PRICES

ENGINE HALF COUPLINGS SERIES 16200

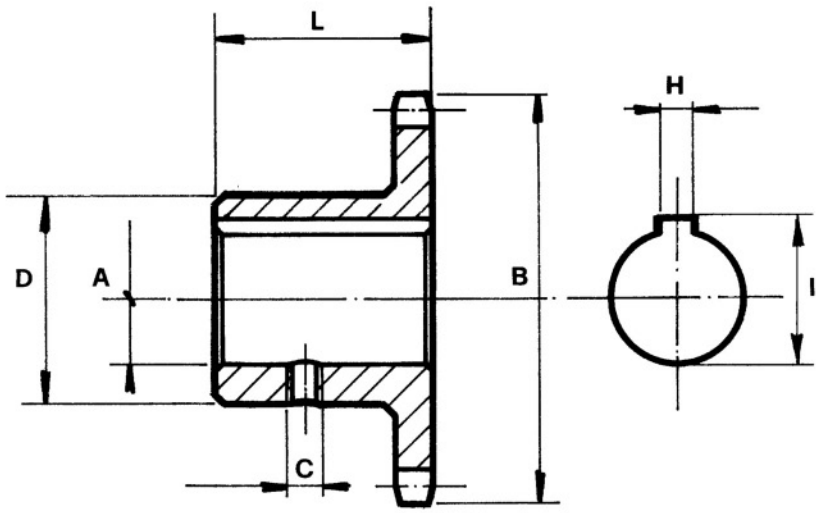

Code No.	Type of toothing		A	B	C	D	H	I	L	List £ each
	Pitch	No. of teeth								
01-16201	3/8''	16	14	53,6	M8	38	5	16,1	30	**£POA**
01-16202	3/8''	16	19	53,6	M8	38	6	21,6	40	**£POA**
01-16203	3/8''	16	24	53,6	M8	38	8	27,1	40	**£POA**
01-16204	1/2''	14	24	63,26	M8	41	8	27,1	50	**£POA**
01-16205	1/2''	16	28	70	M10	48	8	31,1	65	**£POA**
01-16206	1/2''	16	32	70	M10	48	10	35,3	87	**£POA**
01-16207	1/2''	18	38	78,5	M10	60	10	41,6	85	**£POA**
01-16208	3/4''	14	38	94,8	M10	64	10	41,6	85	**£POA**
01-16209	1/2''	18	42	78,5	M10	60	12	45,6	110	**£POA**
01-16210	3/4''	14	42	94,8	M10	64	12	45,6	110	**£POA**
01-16211	1/2''	19	48	83,7	M12	64	14	52,1	110	**£POA**
01-16212	3/4''	16	48	107,2	M12	74	14	52,1	110	**£POA**
01-16213	3/4''	16	55	107,2	M12	74	16	60,1	110	**£POA**
01-16214	3/4''	20	60	131,7	M14	94	18	65,1	125	**£POA**
01-16215	3/4''	20	65	131,7	M14	94	18	70,1	145	**£POA**
01-16216	3/4''	24	75	156,12	M16	120	20	81,3	145	**£POA**
01-16217	1''	18	80	157,2	M16	117	22	87,2	150	**£POA**

GEARBOX HALF-COUPLINGS SERIES 16000

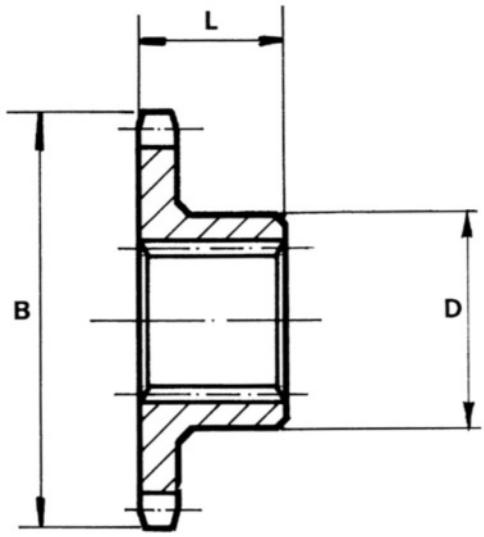

Code No.	External toothing		Internal toothing		B	D	L	List £ each
	Profile	No. of teeth	Profile	No. of teeth				
01-16001	3/8''	16	25 x 22	14	53,6	38	22	£POA
01-16002	1/2''	14	35 x 31	18	63,26	41	28	£POA
01-16003	1/2''	16	35 x 31	18	70	47	28	£POA
01-16004	1/2''	18	48 x 44	23	78,5	60	40	£POA
01-16005	3/4''	14	48 x 44	23	94,8	64	40	£POA
01-16006	1/2''	19	48 x 44	23	83,7	64	40	£POA
01-16007	3/4''	16	48 x 44	23	107,2	74	40	£POA
01-16008	3/4''	16	58 x 53	27	107,2	74	40	£POA
01-A RICHIESTA	3/4''	16	72 x 66	33	107,2	80,5	40	£POA
01-16009	3/4''	20	48 x 44	23	131,7	94	50	£POA
01-16010	3/4''	20	58 x 53	27	131,7	94	50	£POA
01-16011	3/4''	20	72 x 66	33	131,7	94	50	£POA
01-16012	3/4''	24	48 x 44	23	156,12	120	50	£POA
01-16013	3/4''	24	58 x 53	27	156,12	120	50	£POA
01-16014	3/4''	24	72 x 66	33	156,12	120	50	£POA
01-16015	1''	18	72 x 66	33	157,2	115	50	£POA

50% OFF ALL PRICES

COMPLETE CHAIN TYPE COUPLINGS SERIES 12800

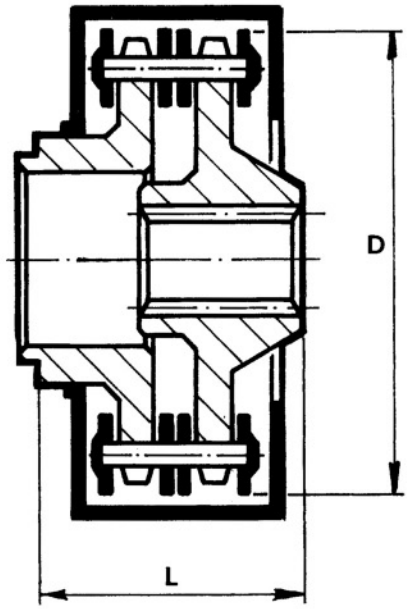

Max. torque at 2500 r.p.m.

Complete coupling Code No.	Gearbox half-coupling Code No.	Flange half-coupling Code No.	Chain Code No.	Link Code No.	Guard Code No.	D	L	Kgm	HP	List £ each
01-12801	12005	12201	12401	12501	12600	101	53	15	52	£87.80
01-12802	12001	12202	12402	12501	12601	109	48	18,5	64	£87.80
01-12803	12002	12202	12402	12501	12601	109	48	18,5	64	£87.80
01-12804	12003	12203	12403	12501	12602	134	64	23	80	£128.30
01-12805	12004	12204	12404	12502	12603	138	66	30	100	£165.46
01-12806	12006	12204	12404	12502	12603	138	66	30	100	£165.46
01-12807	12007	12205	12405	12502	12604	162	63	40	135	£182.34
01-12808	12008	12205	12405	12502	12604	162	63	40	135	£182.34

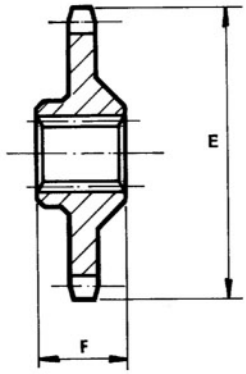

Code No.	External toothing		Internal toothing		E	F	List £ each
	Pitch	No. of teeth	Profile	No. of teeth			
01-12005	1/2''	22	35 × 31	18	94,5	27	£405.39
01-12001	1/2''	24	32 × 38	17	102,5	27	£405.39
01-12002	1/2''	24	35 × 31	18	102,5	27	£405.39
01-12003	1/2''	30	48 × 44	23	127	40	£58.09
01-12004	3/4''	20	48 × 44	23	130,5	40	£67.53
01-12006	3/4''	20	50 × 45	24	130,5	40	£67.53
01-12007	3/4''	24	48 × 44	23	156,13	48	£84.42
01-12008	3/4''	24	58 × 53	27	156,13	48	£84.42

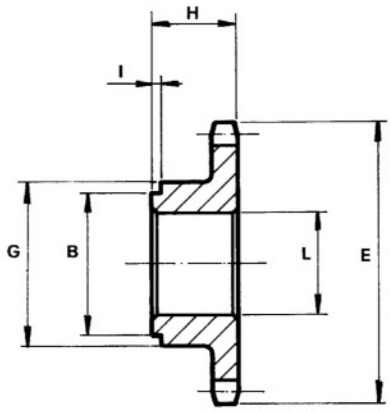

Code No.	External toothing		G	B	E	H	I	L	List £ each
	Pitch	No. of teeth							
01-12201	1/2''	22	70	68	94,5	23	4	56	£33.75
01-12202	1/2''	24	72	68	102,5	27	3	56	£33.75
01-12203	1/2''	30	81	74	127	40	3	68	£50.66
01-12204	3/4''	20	82	74	130,5	40	3	68	£53.71
01-12205	3/4''	24	110	105	156,13	48	5	90	£81.05

COMPLETE SPLINED COUPLINGS SERIES 11400

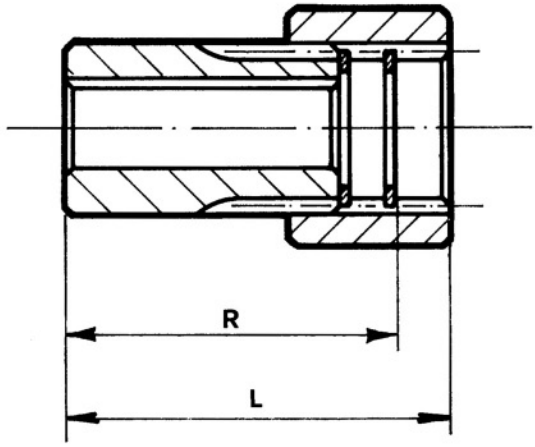

Complete coupling Code No.	Half-coupling Code No.	Sleeve Code No.	Profile DIN 5482B	No. of teeth	L	HP.	Kgm.	R	List £ each
01-11401 GN14	11001	11201	32 × 28	17	50	0,5	3	40	£45.56
01-11402 GN19	11003				60	1		50	£34.79
01-11405 GN24	11005	11205	48 × 44	23	77	2 ÷ 3	11	60	£60.76
01-11406 GN28	11006				87	5,5		70	£60.76
01-11408 GN38	11008	11208	58 × 53	27	111	7,5 ÷ 12,5	15	93	£94.53
01-11409 GN42	11009				141	12,5 ÷ 20		123	£111.43
01-11410 GN48	11010	11210	72 × 66	33	146	30	20	123	£141.81
01-11411 GN55	11011	11216	80 × 74	36	155	40	25	125	£185.72
01-11417 GN60	11017	11217	100 × 94	44	175	45 ÷ 50	30	140	£286.39
01-11418 GN65	11018					55 ÷ 60	35	140	£286.39
01-11419 GN75	11019					70 ÷ 80	45	140	£286.39

HALF-COUPLINGS - SLEEVES SERIES 11200

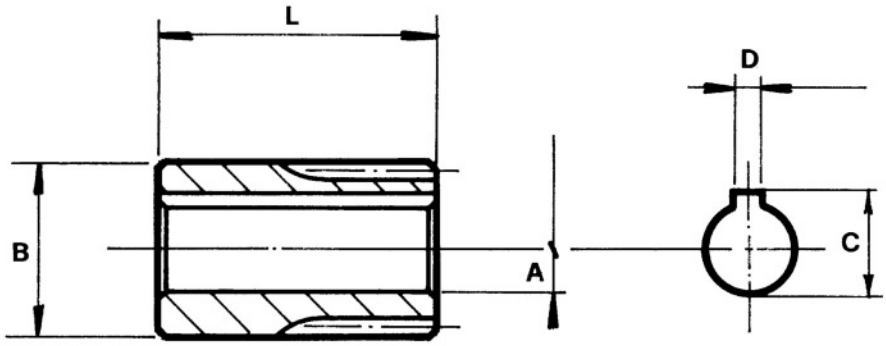

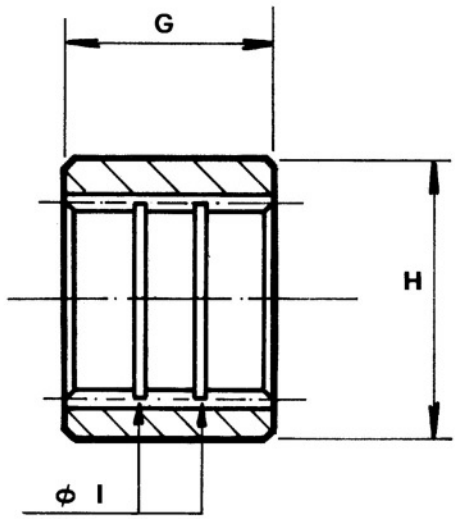

Half-coupling Code No.	Sleeve Code No.	Profile DIN 5482A	A	B	C	D	G	H	I	L	List £ each
01-11001	11201	32 × 28	14	31,5	16,1	5	30	36	28	30	£18.07
01-11003			19		21,6	6				40	£20.24
01-11005	11205	48 × 44	24	47,5	27	8	44	55	44	50	£40.51
01-11006			28		31					60	£40.51
01-11008	11208	58 × 53	38	57,5	41,6	10	49	68	53	80	£67.53
01-11009			42	64	45,7	12				110	£84.42
01-11010	11210	72 × 66	48	71,3	52,5	14	59	84	66		£94.53
01-11011	11216	80 × 74	55	84	59,3	16	90	100	74		£111.43
01-11017	11217	100 × 94	60	99,3	64,4	18	105	125	94	125	£202.61
01-11018			65		69,4						£202.61
01-11019			75	120		20					£202.61

50% OFF ALL PRICES

FILTRATION

PRESSURE FILTERS.....521
RETURN FILTERS.....525
TANK TOP RETURN FILTERS.....527
SUCTION FILTERS.....529
SUCTION STRAINERS.....530
DIFFUSERS.....531
FILLER BREATHERS.....531
LEVEL INDICATORS.....535
ELECTRIC LEVEL INDICATORS.....536
ELECTRIC FLOATING LEVEL GAUGES.....536
OIL LEVEL GAUGES.....539
FILTREC SIMPLEX AND DUPLEX INDUSTRIAL FILTERS.....540
SIGHT GLASSES, PLUGS AND BREATHERS.....541

FILTREC Technical Filtration

IKRON®

FLOWFIT

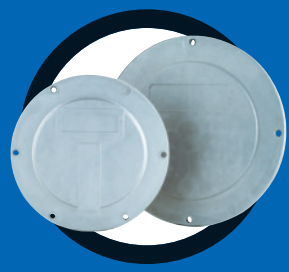

PUSH IN FILLER BREATHER.....534
SPIN-ON AIR BREATHER.....534
AIR BREATHERS.....534
PLASTIC HYDRAULIC THREADED AIR BREATHERS.....534
STEEL HYDRAULIC THREADED AIR BREATHERS.....534
LEVEL INDICATORS.....535
ELECTRIC TYPE LEVEL INDICATORS.....535
ELECTRIC LEVEL INDICATORS.....535
SIMPLEX AND DUPLEX INDUSTRIAL FILTERS.....540
SIGHT GLASSES.....541
PLUGS.....541
BREATHERS.....541

FILTREC Technical Filtration

IKRON®

FLOWFIT

50% OFF ALL PRICES

PRESSURE FILTERS

IN LINE LOW PRESSURE FILTER HF625 SERIES

These filters are designed to be connected to any low pressure line up to 25bar of any hydraulic circuit.

ALUMINIUM HEAD • STEEL BOWL • BUNA SEALS • C/W VISUAL INDICATOR • FLOW RATING UP TO 85 L/MIN
MAX WORKING PRESSURE 25 BAR • TESTING PRESSURE 50 BAR • BURST PRESSURE 75 BAR
OPERATING TEMPERATURE WITH BUNA SEALS -30 +90(°C) WITH VITON SEALS -20 +110(°C)

	ORDER CODE	PORTS	FLOW	PRICE	ELEMENT	PRICE
10 MICRON FIBREGLASS						
HF625.20.135-AS-FG010-B17-GE-B-XA-FP-D	HHE46540	3/4"	40	£179.70	HHC02800	£124.97
HF625-20.180-AS-FG010-B17-GE-B-XA-FP-D	HHE46655	3/4"	50	£203.98	HHC02905	£152.47
10 MICRON CELLULOSE						
HF625-20.135-AS-SP010-B17-GE-B-XA-FP-D	HHE46455	3/4"	50	£111.75	HHC02875	£48.94
HF625-20.180-AS-SP010-B17-GE-B-XA-FP-D	HHE46575	3/4"	60	£115.18	HHC02980	£60.21
25 MICRON FIBREGLASS						
HF625.20.135-AS-FG025-B17-GE-B-XA-FP-D	HHE46553	3/4"	40	£168.42	HHC02815	£112.07
HF625-20.180-AS-FG025-B17-GE-B-XA-FP-D	HHE46675	3/4"	50	£190.77	HHC02920	£137.48
25 MICRON CELLULOSE						
HF625.20.135-AS-SP025-B17-GE-B-XA-FP-D	HHE46475	3/4"	60	£111.75	HHC02890	£56.94
HF625-20.180-AS-SP025-B17-GE-B-XA-FP-D	HHE46595	3/4"	70	£114.58	HHC02995	£61.52

IN LINE MEDIUM PRESSURE FILTER HF650 SERIES

INDICATORS NOT AVAILABLE AS SPARES

The filter HF650 is suitable for working pressure up to 35 bar.

ALUMINIUM HEAD • STEEL BOWL • BUNA SEALS • C/W VISUAL INDICATOR • FLOW RATING UP TO 140 L/MIN
MAX WORKING PRESSURE 35 BAR • TESTING PRESSURE 70 BAR • BURST PRESSURE 105 BAR
OPERATING TEMPERATURE WITH BUNA SEALS -30 +90(°C) WITH VITON SEALS -20 +110(°C)

	ORDER CODE	PORTS	FLOW	PRICE	ELEMENT	PRICE
3 MICRON FIBREGLASS						
HF650-20.140-AS-FG003-B17-GE-B-XA-F	HHE73005	3/4"	50	£280.47	HHC02701	£120.80
HF650-20.140-AS-FG003-B17-GF-B-XA-F	HHE73010	1"	70	£280.47	HHC02701	£120.80
HF650-20.180-AS-FG003-B17-GE-B-XA-F	HHE70190	3/4"	85	£316.89	HHC02725	£160.60
HF650-20.180-AS-FG003-B17-GF-B-XA-F	HHE70195	1"	95	£316.89	HHC02725	£160.95
HF650-20.230-AS-FG003-B17-GE-B-XA-F	HHE78490	3/4"	100	£308.75	HHC02751	£169.20
HF650-20.230-AS-FG003-B17-GF-B-XA-F	HHE78500	1"	110	£334.66	HHC02751	£169.20
6 MICRON FIBREGLASS						
HF650-20.140-AS-FG006-B17-GE-B-XA-F	HHE72300	3/4"	60	£280.47	HHC02702	£120.80
HF650-20.140-AS-FG006-B17-GF-B-XA-F	HHE72320	1"	80	£280.47	HHC02702	£120.80
HF650-20.180-AS-FG006-B17-GE-B-XA-F	HHE70800	3/4"	95	£316.89	HHC02730	£160.60
HF650-20.180-AS-FG006-B17-GF-B-XA-F	HHE70815	1"	105	£316.89	HHC02730	£160.60
HF650-20.230-AS-FG006-B17-GE-B-XA-F	HHE79080	3/4"	110	£310.37	HHC02752	£157.79
HF650-20.230-AS-FG006-B17-GF-B-XA-F	HHE79100	1"	120	£324.77	HHC02752	£157.79
10 MICRON FIBREGLASS						
HF650-20.140-AS-FG010-B17-GE-B-XA-F	HHE72409	3/4"	70	£258.92	HHC02703	£97.42
HF650-20.140-AS-FG010-B17-GF-B-XA-F	HHE72560	1"	90	£258.92	HHC02703	£97.42
HF650-20.180-AS-FG010-B17-GE-B-XA-F	HHE75802	3/4"	100	£292.76	HHC02727	£134.33
HF650-20.180-AS-FG010-B17-GF-B-XA-F	HHE70303	1"	110	£292.76	HHC02727	£134.33
HF650-20.230-AS-FG010-B17-GE-B-XA-F	HHE82010	3/4"	120	£299.34	HHC02753	£145.01
HF650-20.230-AS-FG010-B17-GF-B-XA-F	HHE79820	1"	130	£299.34	HHC02753	£145.01
16 MICRON FIBREGLASS						
HF650-20.140-AS-FG016-B17-GE-B-XA-F	HHE73035	3/4"	75	£256.62	HHC02704	£94.92
HF650-20.140-AS-FG016-B17-GF-B-XA-F	HHE73036	1"	95	£256.62	HHC02704	£94.92
HF650-20.180-AS-FG016-B17-GE-B-XA-F	HHE76650	3/4"	105	£262.12	HHC02728	£100.91
HF650-20.180-AS-FG016-B17-GF-B-XA-F	HHE76620	1"	115	£262.12	HHC02728	£100.91
HF650-20.230-AS-FG016-B17-GE-B-XA-F	HHE80010	3/4"	125	£296.70	HHC02754	£141.97
HF650-20.230-AS-FG016-B17-GF-B-XA-F	HHE80020	1"	135	£296.70	HHC02754	£141.97
25 MICRON FIBREGLASS						
HF650-20.140-AS-FG025-B17-GE-B-XA-F	HHE73045	3/4"	80	£251.14	HHC02705	£88.96
HF650-20.140-AS-FG025-B17-GF-B-XA-F	HHE73050	1"	100	£251.14	HHC02705	£88.96
HF650-20.180-AS-FG025-B17-GE-B-XA-F	HHE76650	3/4"	110	£279.33	HHC02729	£119.62
HF650-20.180-AS-FG025-B17-GF-B-XA-F	HHE76755	1"	120	£279.33	HHC02729	£119.62
HF650-20.230-AS-FG025-B17-GE-B-XA-F	HHE80250	3/4"	130	£308.22	HHC02755	£138.61
HF650-20.230-AS-FG025-B17-GF-B-XA-F	HHE81250	1"	140	£308.22	HHC02755	£138.61
10 MICRON REINFORCED CELLULOSE						
HF650-20.140-AS-RP010-B17-GE-B-XA-F	HHE70360	3/4"	65	£225.47	HHC02706	£60.97
HF650-20.140-AS-RP010-B17-GF-B-XA-F	HHE70495	1"	85	£225.47	HHC02706	£60.97
HF650-20.180-AS-RP010-B17-GE-B-XA-F	HHE77341	3/4"	100	£244.51	HHC02731	£81.70
HF650-20.180-AS-RP010-B17-GF-B-XA-F	HHE77345	1"	105	£363.23	HHC02731	£81.70
HF650-20.230-AS-RP010-B17-GE-B-XA-F	HHE81390	3/4"	105	£272.59	HHC02756	£114.17
HF650-20.230-AS-RP010-B17-GF-B-XA-F	HHE81405	1"	110	£272.59	HHC02756	£113.76
25 MICRON REINFORCED CELLULOSE						
HF650-20.140-AS-RP025-B17-GE-B-XA-F	HHE74200	3/4"	80	£225.47	HHC02707	£60.97
HF650-20.140-AS-RP025-B17-GF-B-XA-F	HHE74220	1"	100	£225.47	HHC02707	£60.97
HF650-20.180-AS-RP025-B17-GE-B-XA-F	HHE81551	3/4"	110	£244.51	HHC02732	£81.70

CONTINUED ON NEXT PAGE

CONTINUED FROM PREVIOUS PAGE

IN LINE MEDIUM PRESSURE FILTER HF650 SERIES

	ORDER CODE	PORTS	FLOW	PRICE	ELEMENT	PRICE
25 MICRON REINFORCED CELLULOSE						
HF650-20.180-AS-RP025-B17-GF-B-XA-F	HHE81559	1"	120	£244.51	HHC02732	£81.70
HF650-20.230-AS-RP025-B17-GE-B-XA-F	HHE81490	3/4"	130	£272.59	HHC02757	£114.17
HF650-20.230-AS-RP025-B17-GF-B-XA-F	HHE81500	1"	140	£272.59	HHC02757	£114.17

IKRON

IN LINE MEDIUM PRESSURE FILTER HF690 SERIES

UP TO 110 BAR

These in line medium pressure filters are specifically designed to be connected on the pressure line of the hydraulic circuit and provide versatility to safeguard the circuit components from contaminating particles.

ALUMINIUM HEAD • ALUMINIUM BOWL • BUNA SEALS • FLOW RANGE 10-80L/MIN • MAX WORKING PRESSURE 110 BAR TESTING PRESSURE 160 BAR • BURST PRESSURE 330 BAR • OPERATING TEMPERATURE WITH BUNA SEALS -20 +80(°C) WITH VITON SEALS -20 +110(°C) • WITH FLUID (HH-HL-HM-HR-HV-HG) AND WATER EMULSION (HFAE-HFAS) USE BUNA SEALS, WITH SYNTHETIC FLUID (HS-HFDR-HFDU-HFDS) USE VITON SEALS

	ORDER CODE	PORTS	FLOW	PRICE	ELEMENT	PRICE
3 MICRON FIBREGLASS						
HF690-10.086-AS-FG003-B60-GD-B-XA-J	HHP20025	1/2"	10	£246.05	HHC46010	£57.46
HF690-10.180-AS-FG003-B60-GD-B-XA-J	HHP20520	1/2"	30	£265.27	HHC46050	£68.97
6 MICRON FIBREGLASS						
HF690-10.086-AS-FG006-B60-GD-B-XA-J	HHP20035	1/2"	15	£245.67	HHC46011	£54.98
HF690-10.180-AS-FG006-B60-GD-B-XA-J	HHP20535	1/2"	45	£262.57	HHC46051	£65.97
10 MICRON FIBREGLASS						
HF690-10.086-AS-FG010-B60-GD-B-XA-J	HHP20065	1/2"	25	£236.86	HHC46012	£47.49
HF690-10.180-AS-FG010-B60-GD-B-XA-J	HHP20565	1/2"	60	£254.29	HHC46052	£56.98
10 MICRON REINFORCED CELLULOSE						
HF690-10.086-AS-RP010-B60-GD-B-XA-J	HHP20155	1/2"	30	£216.81	HHC46015	£40.52
HF690-10.180-AS-RP010-B60-GD-B-XA-J	HHP20655	1/2"	65	£233.53	HHC46055	£38.40
25 MICRON FIBREGLASS						
HF690-10.086-AS-FG025-B60-GD-B-XA-J	HHP20099	1/2"	40	£230.00	HHC46013	£39.99
HF690-10.180-AS-FG025-B60-GD-B-XA-J	HHP20599	1/2"	75	£247.38	HHC46053	£47.53
25 MICRON REINFORCED CELLULOSE						
HF690-10.086-AS-RP025-B60-GD-B-XA-J	HHP20185	1/2"	40	£243.76	HHC46016	£54.98
HF690-10.180-AS-RP025-B60-GD-B-XA-J	HHP20685	1/2"	75	£262.57	HHC46056	£65.97
60 MICRON STAINLESS STEEL						
HF690-10.086-AS-MI060-B60-GD-B-XA-J	HHP20200	1/2"	45	£238.00	HHC46014	£48.72
HF690-10.180-AS-MI060-B60-GD-B-XA-J	HHP20621	1/2"	80	£255.69	HHC46054	£58.48

HHI03070
HI25-I16-B50-TF-B-SI
J' VISUAL DIFFERENTIAL INDICATOR
£90.10

HHI03075
HI25-I17-B50-TF-B-SI
T' VISUAL ELECTRICAL INDICATOR
£97.17

IKRON

IN LINE MEDIUM PRESSURE FILTER HF745 SERIES

UP TO 280 BAR

The filter HF745 is suitable for working pressure up to 280 bar.

CAST IRON HEAD • STEEL BOWL • BUNA SEALS • C/W VISUAL INDICATOR • FLOW RATING UP TO 90 L/MIN MAX WORKING PRESSURE 280 BAR • TESTING PRESSURE 420 BAR • BURST PRESSURE 560 BAR OPERATING TEMPERATURE WITH BUNA SEALS -30 +90(°C) WITH VITON SEALS -20 +110(°C)

	ORDER CODE	PORTS	FLOW	PRICE	ELEMENT	PRICE
3 MICRON FIBREGLASS						
HF745-20.080-AS-FG003-LC-B60-GD-B-XA-H-F2	HHP50105	1/2"	25	£332.39	HHC01900	£71.42
HF745-20.106-AS-FG003-LC-B60-GD-B-XA-H-F2	HHP51175	1/2"	30	£353.81	HHC01904	£81.30
HF745-20.203-AS-FG003-LC-B60-GD-B-XA-H-F2	HHP52190	1/2"	50	£422.80	HHC00121	£23.10
HF745-20.080-AS-FG003-LC-B60-GE-B-XA-H-F2	HHP50160	3/4"	25	£332.39	HHC01900	£71.42
HF745-20.106-AS-FG003-LC-B60-GE-B-XA-H-F2	HHP51442	3/4"	30	£348.53	HHC01904	£81.21
HF745-20.203-AS-FG003-LC-B60-GE-B-XA-H-F2	HHP52205	3/4"	55	£422.80	HHC00121	£131.10
6 MICRON FIBREGLASS						
HF745-20.080-AS-FG006-LC-B60-GD-B-XA-H-F2	HHP50225	1/2"	30	£332.39	HHC01901	£71.32
HF745-20.106-AS-FG006-LC-B60-GD-B-XA-H-F2	HHP51215	1/2"	40	£353.81	HHC01905	£80.60
HF745-20.203-AS-FG006-LC-B60-GD-B-XA-H-F2	HHP52270	1/2"	55	£422.48	HHC00122	£131.10
HF745-20.080-AS-FG006-LC-B60-GE-B-XA-H-F2	HHP50672	3/4"	35	£332.39	HHC01901	£71.32
HF745-20.106-AS-FG006-LC-B60-GE-B-XA-H-F2	HHP51390	3/4"	40	£353.81	HHC01905	£80.59
HF745-20.203-AS-FG006-LC-B60-GE-B-XA-H-F2	HHP52283	3/4"	60	£422.80	HHC00122	£131.10
10 MICRON FIBREGLASS						
HF745-20.080-AS-FG010-LC-B60-GD-B-XA-H-F2	HHP50425	1/2"	35	£309.93	HHC01902	£42.25
HF745-20.106-AS-FG010-LC-B60-GD-B-XA-H-F2	HHP51412	1/2"	45	£330.97	HHC01906	£47.09
HF745-20.203-AS-FG010-LC-B60-GD-B-XA-H-F2	HHP52423	1/2"	60	£386.05	HHC01910	£70.28
HF745-20.080-AS-FG010-LC-B60-GE-B-XA-H-F2	HHP50500	3/4"	40	£309.93	HHC01902	£42.25
HF745-20.106-AS-FG010-LC-B60-GE-B-XA-H-F2	HHP51455	3/4"	50	£330.97	HHC01906	£47.09
HF745-20.203-AS-FG010-LC-B60-GE-B-XA-H-F2	HHP52472	3/4"	70	£386.05	HHC01910	£70.05
25 MICRON FIBREGLASS						
HF745-20.080-AS-FG025-LC-B60-GD-B-XA-H-F2	HHP50625	1/2"	45	£336.23	HHC01903	£36.07
HF745-20.106-AS-FG025-LC-B60-GD-B-XA-H-F2	HHP51625	1/2"	60	£320.54	HHC01907	£39.11
HF745-20.203-AS-FG025-LC-B60-GD-B-XA-H-F2	HHP51624	1/2"	80	£368.64	HHC01911	£57.27
HF745-20.080-AS-FG025-LC-B60-GE-B-XA-H-F2	HHP50674	3/4"	50	£336.23	HHC01903	£36.12
HF745-20.106-AS-FG025-LC-B60-GE-B-XA-H-F2	HHP51623	3/4"	70	£320.54	HHC01907	£39.11
HF745-20.203-AS-FG025-LC-B60-GE-B-XA-H-F2	HHP52674	3/4"	90	£368.64	HHC01911	£57.27

HHI02030
HI25-I11-B50-GD-B-SS
H' VISUAL DIFFERENTIAL INDICATOR
£107.76

HHI02050
HI25-I12-B50-GD-B-SS
VISUAL ELECTRICAL DIFFERENTIAL INDICATOR
£150.17

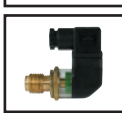

HHI02065
HI25-I13-B50-GD-B-SS
U' VISUAL DIFFERENTIAL INDICATOR
£166.07

50% OFF ALL PRICES

IN LINE HIGH PRESSURE MANIFOLD MOUNTED FILTER HF735 SERIES

The filter HF735 is suitable for working pressure up to 320 bar.

CAST IRON HEAD • STEEL BOWL • BUNA SEALS • C/W VISUAL INDICATOR • FLOW RATING UP TO 180 L/MIN
MAX WORKING PRESSURE 320 BAR • TESTING PRESSURE 480 BAR • BURST PRESSURE 640 BAR
OPERATING TEMPERATURE WITH BUNA SEALS -30 +90(°C) WITH VITON SEALS -20 +110(°C)

UP TO 320 BAR

HHI02030
HI25-I11-B50-GD-B-SS
H' VISUAL DIFFERENTIAL INDICATOR
£107.82

HHI02050
HI25-I12-B50-GD-B-SS
VISUAL ELECTRICAL DIFFERENTIAL INDICATOR
£150.24

HHI02065
HI25-I13-B50-GD-B-SS
U' VISUAL DIFFERENTIAL INDICATOR
£166.16

	ORDER CODE	FLOW	PRICE	ELEMENT	PRICE
3 MICRON FIBREGLASS					
HF735-20.080-AS-FG003-LC-B60-B-XA-H	HHP40105	25	£320.32	HHC01900	£75.71
HF735-20.106-AS-FG003-LC-B60-B-XA-H	HHP41001	30	£346.98	HHC01904	£86.18
HF735-20.203-AS-FG003-LC-B60-B-XA-H	HHP41805	50	£404.69	HHC01908	£126.60
HF735-30.115-AS-FG003-LC-B60-B-XA-H	HHP45005	50	£487.15	HHC01912	£106.58
HF735-30.223-AS-FG003-LC-B60-B-XA-H	HHP45701	100	£527.34	HHC01916	£146.09
6 MICRON FIBREGLASS					
HF735-20.080-AS-FG006-LC-B60-B-XA-H	HHP40146	30	£320.32	HHC01901	£75.60
HF735-20.106-AS-FG006-LC-B60-B-XA-H	HHP41015	40	£346.98	HHC01905	£85.44
HF735-20.203-AS-FG006-LC-B60-B-XA-H	HHP41825	55	£404.69	HHC01909	£125.95
HF735-30.115-AS-FG006-LC-B60-B-XA-H	HHP45025	60	£483.54	HHC01913	£106.02
HF735-30.223-AS-FG006-LC-B60-B-XA-H	HHP45711	110	£522.65	HHC01917	£145.74
10 MICRON FIBREGLASS					
HF735-20.080-AS-FG010-LC-B60-B-XA-H	HHP40213	35	£297.97	HHC01902	£42.25
HF735-20.106-AS-FG010-LC-B60-B-XA-H	HHP42600	45	£321.49	HHC01906	£47.11
HF735-20.203-AS-FG010-LC-B60-B-XA-H	HHP41881	60	£367.94	HHC01910	£70.05
HF735-30.115-AS-FG010-LC-B60-B-XA-H	HHP45045	80	£472.04	HHC01914	£58.97
HF735-30.223-AS-FG010-LC-B60-B-XA-H	HHP45719	140	£507.03	HHC01918	£81.26
25 MICRON FIBREGLASS					
HF735-20.080-AS-FG025-LC-B60-B-XA-H	HHP40273	45	£291.44	HHC01903	£38.28
HF735-20.106-AS-FG025-LC-B60-B-XA-H	HHP41113	60	£313.68	HHC01907	£41.46
HF735-20.203-AS-FG025-LC-B60-B-XA-H	HHP41879	80	£350.53	HHC01911	£60.71
HF735-30.115-AS-FG025-LC-B60-B-XA-H	HHP45065	100	£461.40	HHC01915	£71.35
HF735-30.223-AS-FG025-LC-B60-B-XA-H	HHP46007	180	£493.99	HHC01919	£72.50

IN LINE HIGH PRESSURE CETOP 3 MOUNTED FILTER HF725 SERIES

The high pressure filter HF725 series are characterised by a direct and Cetop 3 connections, Modular Assembly, Compact Design and Low Weight.

CAST IRON HEAD • STEEL C45 BOWL • BUNA SEALS • C/W VISUAL INDICATOR • FLOW RATING UP TO 40 L/MIN
MAX WORKING PRESSURE 350 BAR • TESTING PRESSURE 475 BAR • BURST PRESSURE 600 BAR
OPERATING TEMPERATURE WITH BUNA SEALS -30 +90(°C) WITH VITON SEALS -20 +110(°C)

UP TO 350 BAR

	ORDER CODE	FLOW	PRICE	ELEMENT	PRICE
3 MICRON FIBREGLASS					
HF725-10.100-FG003-HC-B00-B-XD-H-A	HHP39410	15	£553.74	HHC46026	£179.15
6 MICRON FIBREGLASS					
HF725-10.100-FG006-HC-B00-B-XD-H-A	HHP39454	20	£553.74	HHC46028	£179.15
10 MICRON FIBREGLASS					
HF725-10.100-FG010-HC-B00-B-XD-H-A	HHP39500	30	£532.34	HHC46030	£155.79
25 MICRON FIBREGLASS					
HF725-10.100-FG025-HC-B00-B-XD-H-A	HHP39554	40	£507.20	HHC46032	£128.38

IN LINE MINI HIGH PRESSURE FILTER HF705 SERIES

The in line high pressure filter HF705 series are specifically designed to be connected on the pressure line of the hydraulic circuit and provide versatility to safeguard the circuit components from contaminating particles.

ALUMINIUM GALVANISED BODY • SINTERED BRONZE FILTER MEDIA • BUNA SEALS • FLOW RANGE 10-50L/MIN
MAX WORKING PRESSURE 350 BAR • TESTING PRESSURE 500 BAR • BURST PRESSURE 800 BAR
OPERATING TEMPERATURE WITH BUNA SEALS -30 +90(°C) WITH VITON SEALS -20 +110(°C)

UP TO 350 BAR

	ORDER CODE	PORTS	FLOW	PRICE	ELEMENT	PRICE
10 MICRON SINTERED BRONZE						
HF705-10.040-T-SB010-GB-B	HHQ00023	1/4"	15	£88.86	HHC03050	£39.60
HF705-10.040-T-SB010-GC-B	HHQ00020	3/8"	20	£88.86	HHC03050	£39.60
HF705-10.040-T-SB010-GD-B	HHQ00046	1/2"	25	£88.86	HHC03050	£39.60
25 MICRON SINTERED BRONZE						
HF705-10.040-T-SB025-GB-B	HHQ00031	1/4"	25	£88.86	HHC03051	£39.60
HF705-10.040-T-SB025-GC-B	HHQ00035	3/8"	30	£88.86	HHC03051	£39.60
HF705-10.040-T-SB025-GD-B	HHQ00039	1/2"	35	£88.86	HHC03051	£39.60
40 MICRON SINTERED BRONZE						
HF705-10.040-T-SB040-GB-B	HHQ00032	1/4"	30	£88.86	HHC03052	£39.60
HF705-10.040-T-SB040-GC-B	HHQ00036	3/8"	40	£88.86	HHC03052	£39.60
HF705-10.040-T-SB040-GD-B	HHQ00040	1/2"	45	£88.86	HHC03052	£39.60
60 MICRON SINTERED BRONZE						
HF705-10.040-T-SB060-GB-B	HHQ00033	1/4"	35	£88.86	HHC03053	£39.60
HF705-10.040-T-SB060-GC-B	HHQ00037	3/8"	45	£88.86	HHC03053	£39.60
HF705-10.040-T-SB060-GD-B	HHQ00041	1/2"	50	£88.86	HHC03053	£39.60

HIGH-PRESSURE FILTERS HF760 SERIES

Inline High Pressure filters series 760 are designed to be connected on the pressure line of the hydraulic circuit.

CAST IRON BODY GS 450-10 UNI 1801083 • BOWL: EXTRUDED STEEL • SEALS: BUNA
FLOW RANGE: 30-450 L/MIN • MAX WORKING PRESSURE: 420 BAR • OPERATING TEMPERATURE -30 +90°c
C/W BYPASS SET AT 6 BAR • C/W VISUAL DIFFERENTIAL INDICATOR

OPTIONS AVAILABLE UPON REQUEST

- 3 MICRON GLASSFIBRE
- 6 MICRON GLASSFIBRE
- 210 BAR ELEMENT COLLAPSE PRESSURE RATING

- METRIC/NPT PORTS
- VITON SEALS
- ELECTRICAL DIFFERENTIAL INDICATOR
- VISUAL ELECTRICAL DIFFERENTIAL INDICATOR
- ELECTRICAL INDICATOR WITH THERMOSTAT
- VISUAL ELECTRICAL DIFFERENTIAL INDICATOR WITH THERMOSTAT

HHI02030
HI25-I11-B50-GD-B-SS
H' VISUAL DIFFERENTIAL INDICATOR
£107.82

HHI02050
HI25-I12-B50-GD-B-SS
VISUAL ELECTRICAL DIFFERENTIAL INDICATOR
£150.24

HHI02065
HI25-I13-B50-GD-B-SS
U' VISUAL DIFFERENTIAL INDICATOR
£166.16

	ORDER CODE	PORTS	MAX PRESS. BAR	FLOW	PRICE	ELEMENT	PRICE
3 MICRON FIBREGLASS							
HF760-20.080-AS-FG003-LC-B60-GD-B-XA-H	HHP02012	1/2"	420	25	£369.53	HHC01900	£75.71
HF760-20.080-AS-FG003-LC-B60-GE-B-XA-H	HHP02019	3/4"	420	25	£369.53	HHC01900	£75.71
HF760-20.106-AS-FG003-LC-B60-GD-B-XA-H	HHP02070	1/2"	420	30	£386.24	HHC01904	£86.18
HF760-20.106-AS-FG003-LC-B60-GE-B-XA-H	HHP02061	3/4"	420	30	£384.00	HHC01904	£126.48
HF760-20.203-AS-FG003-LC-B60-GD-B-XA-H	HHP03106	1/2"	420	50	£427.29	HHC01908	£126.48
HF760-20.203-AS-FG003-LC-B60-GE-B-XA-H	HHP03119	3/4"	420	55	£427.29	HHC01908	£106.58
HF760-30.115-AS-FG003-LC-B60-GE-B-XA-H	HHP03116	3/4"	420	55	£397.09	HHC01912	£106.58
HF760-30.115-AS-FG003-LC-B60-GF-B-XA-H	HHP03169	1"	420	60	£514.90	HHC01912	£146.09
HF760-30.223-AS-FG003-LC-B60-GE-B-XA-H	HHP03236	3/4"	420	90	£556.77	HHC01916	£146.09
HF760-30.223-AS-FG003-LC-B60-GF-B-XA-H	HHP03131	1"	420	100	£559.08	HHC01916	£151.99
HF760-40.102-AS-FG003-LC-B60-GF-B-XA-H	HHP03525	1"	280	105	£690.36	HHC01940	£151.99
HF760-40.102-AS-FG003-LC-B60-GG-B-XA-H	HHP03545	1 1/4"	280	105	£690.36	HHC01940	£151.99
HF760-40.102-AS-FG003-LC-B60-GH-B-XA-H	HHP03565	1 1/2"	280	110	£690.36	HHC01940	£151.99
HF760-40.132-AS-FG003-LC-B60-GF-B-XA-H	HHP03805	1"	280	125	£704.24	HHC01928	£168.47
HF760-40.132-AS-FG003-LC-B60-GG-B-XA-H	HHP03943	1 1/4"	280	140	£704.24	HHC01928	£168.47
HF760-40.132-AS-FG003-LC-B60-GH-B-XA-H	HHP03845	1 1/2"	280	140	£704.24	HHC01928	£168.47
HF760-40.227-AS-FG003-LC-B60-GF-B-XA-H	HHP04118	1"	280	200	£832.74	HHC01920	£252.45
HF760-40.227-AS-FG003-LC-B60-GG-B-XA-H	HHP04121	1 1/4"	280	210	£821.77	HHC01920	£252.45
HF760-40.227-AS-FG003-LC-B60-GH-B-XA-H	HHP04103	1 1/2"	280	225	£757.01	HHC01920	£252.45
HF760-40.372-AS-FG003-LC-B60-GF-B-XA-H	HHP04211	1"	280	250	£975.20	HHC01924	£375.05
HF760-40.372-AS-FG003-LC-B60-GG-B-XA-H	HHP04221	1 1/4"	280	260	£975.20	HHC01924	£375.05
HF760-40.372-AS-FG003-LC-B60-GH-B-XA-H	HHP04264	1 1/2"	280	270	£975.20	HHC01924	£375.05
6 MICRON FIBREGLASS							
HF760-20.080-AS-FG006-LC-B60-GD-B-XA-H	HHP02022	1/2"	420	30	£364.91	HHC01901	£75.60
HF760-20.080-AS-FG006-LC-B60-GE-B-XA-H	HHP02026	3/4"	420	35	£364.87	HHC01901	£75.60
HF760-20.106-AS-FG006-LC-B60-GD-B-XA-H	HHP02056	1/2"	420	40	£380.85	HHC01905	£85.44
HF760-20.106-AS-FG006-LC-B60-GE-B-XA-H	HHP02085	3/4"	420	40	£380.77	HHC01905	£85.44
HF760-20.203-AS-FG006-LC-B60-GD-B-XA-H	HHP03201	1/2"	420	55	£423.16	HHC01909	£125.95
HF760-20.203-AS-FG006-LC-B60-GE-B-XA-H	HHP02970	3/4"	420	60	£423.16	HHC01909	£125.95
HF760-30.115-AS-FG006-LC-B60-GE-B-XA-H	HHP03137	3/4"	420	60	£513.46	HHC01913	£106.02
HF760-30.115-AS-FG006-LC-B60-GF-B-XA-H	HHP03171	1"	420	65	£511.22	HHC01913	£106.02
HF760-30.223-AS-FG006-LC-B60-GE-B-XA-H	HHP03242	3/4"	420	100	£552.10	HHC01917	£145.74
HF760-30.223-AS-FG006-LC-B60-GF-B-XA-H	HHP03140	1"	420	110	£460.39	HHC01917	£145.74
HF760-40.102-AS-FG006-LC-B60-GF-B-XA-H	HHP03582	1"	280	120	£688.30	HHC01941	£155.72
HF760-40.102-AS-FG006-LC-B60-GG-B-XA-H	HHP03605	1 1/4"	280	120	£688.30	HHC01941	£155.72
HF760-40.102-AS-FG006-LC-B60-GH-B-XA-H	HHP03625	1 1/2"	280	125	£688.30	HHC01941	£155.72
HF760-40.132-AS-FG006-LC-B60-GF-B-XA-H	HHP03865	1"	280	140	£702.58	HHC01929	£172.55
HF760-40.132-AS-FG006-LC-B60-GG-B-XA-H	HHP04071	1 1/4"	280	160	£702.58	HHC01929	£172.55
HF760-40.132-AS-FG006-LC-B60-GH-B-XA-H	HHP03905	1 1/2"	280	160	£702.58	HHC01929	£172.55
HF760-40.227-AS-FG006-LC-B60-GF-B-XA-H	HHP04131	1"	280	210	£828.55	HHC01920	£257.56
HF760-40.227-AS-FG006-LC-B60-GG-B-XA-H	HHP04141	1 1/4"	280	225	£828.55	HHC01920	£257.56
HF760-40.227-AS-FG006-LC-B60-GH-B-XA-H	HHP04109	1 1/2"	280	250	£788.03	HHC01920	£257.56
HF760-40.372-AS-FG006-LC-B60-GF-B-XA-H	HHP04231	1"	280	260	£969.70	HHC01925	£383.95
HF760-40.372-AS-FG006-LC-B60-GG-B-XA-H	HHP04241	1 1/4"	280	275	£969.70	HHC01925	£383.95
HF760-40.372-AS-FG006-LC-B60-GH-B-XA-H	HHP04203	1 1/2"	280	290	£969.70	HHC01925	£383.95
10 MICRON FIBREGLASS							
HF760-20.080-AS-FG010-LC-B60-GD-B-XA-H	HHP02037	1/2"	420	35	£338.86	HHC01902	£44.79
HF760-20.080-AS-FG010-LC-B60-GE-B-XA-H	HHP02033	3/4"	420	40	£338.86	HHC01902	£44.79
HF760-20.106-AS-FG010-LC-B60-GD-B-XA-H	HHP02050	1/2"	420	45	£352.32	HHC01906	£49.94
HF760-20.106-AS-FG010-LC-B60-GE-B-XA-H	HHP02103	3/4"	420	50	£352.32	HHC01906	£49.94
HF760-20.203-AS-FG010-LC-B60-GD-B-XA-H	HHP03117	1/2"	420	60	£388.74	HHC01910	£74.25
HF760-20.203-AS-FG010-LC-B60-GE-B-XA-H	HHP03121	3/4"	420	70	£388.74	HHC01910	£74.25
HF760-30.115-AS-FG010-LC-B60-GE-B-XA-H	HHP03141	3/4"	420	70	£474.49	HHC01914	£62.51
HF760-30.115-AS-FG010-LC-B60-GF-B-XA-H	HHP03138	1"	420	75	£474.49	HHC01914	£62.51
HF760-30.223-AS-FG010-LC-B60-GE-B-XA-H	HHP03251	3/4"	420	120	£509.31	HHC01918	£85.56
HF760-30.223-AS-FG010-LC-B60-GF-B-XA-H	HHP03139	1"	420	130	£507.96	HHC01918	£85.56
HF760-40.102-AS-FG010-LC-B60-GF-B-XA-H	HHP03641	1"	280	140	£641.98	HHC01942	£94.42
HF760-40.102-AS-FG010-LC-B60-GG-B-XA-H	HHP03662	1 1/4"	280	150	£639.73	HHC01942	£94.42
HF760-40.102-AS-FG010-LC-B60-GH-B-XA-H	HHP03682	1 1/2"	280	150	£641.98	HHC01942	£94.42
HF760-40.132-AS-FG010-LC-B60-GF-B-XA-H	HHP03918	1"	280	170	£654.16	HHC01930	£104.75
HF760-40.132-AS-FG010-LC-B60-GG-B-XA-H	HHP03941	1 1/4"	280	190	£652.01	HHC01930	£104.75
HF760-40.132-AS-FG010-LC-B60-GH-B-XA-H	HHP03959	1 1/2"	280	200	£652.01	HHC01930	£104.75
HF760-40.227-AS-FG010-LC-B60-GF-B-XA-H	HHP04151	1"	280	240	£754.79	HHC01922	£151.63
HF760-40.227-AS-FG010-LC-B60-GG-B-XA-H	HHP04161	1 1/4"	280	260	£752.61	HHC01922	£151.63
HF760-40.227-AS-FG010-LC-B60-GH-B-XA-H	HHP04098	1 1/2"	280	280	£752.61	HHC01922	£151.63
HF760-40.372-AS-FG010-LC-B60-GF-B-XA-H	HHP04252	1"	280	280	£872.93	HHC01926	£227.01
HF760-40.372-AS-FG010-LC-B60-GG-B-XA-H	HHP04267	1 1/4"	280	310	£872.93	HHC01926	£227.01
HF760-40.372-AS-FG010-LC-B60-GH-B-XA-H	HHP04263	1 1/2"	280	320	£872.93	HHC01926	£227.01
HF760-40.517-AS-FG010-LC-B60-GH-B-XA-H	HHP05850	1 1/2"	280	375	£1254.62	HHC01964	£294.81
25 MICRON FIBREGLASS – PLEASE SEE NEXT PAGE							

50% OFF ALL PRICES

CONTINUED FROM
PREVIOUS PAGE

HIGH-PRESSURE FILTERS HF760 SERIES

UP TO 420 BAR

	ORDER CODE	PORTS	MAX PRESS. BAR	FLOW	PRICE	ELEMENT	PRICE
25 MICRON FIBREGLASS							
HF760-20.080-AS-FG025-LC-B60-GD-B-XA-H	HHP02041	1/2"	420	45	£332.90	HHC01903	£33.95
HF760-20.080-AS-FG025-LC-B60-GE-B-XA-H	HHP02032	3/4"	420	50	£335.04	HHC01903	£33.95
HF760-20.106-AS-FG025-LC-B60-GD-B-XA-H	HHP02075	1/2"	420	60	£344.65	HHC01907	£41.46
HF760-20.106-AS-FG025-LC-B60-GE-B-XA-H	HHP02198	3/4"	420	70	£344.65	HHC01907	£41.46
HF760-20.203-AS-FG025-LC-B60-GD-B-XA-H	HHP03114	1/2"	420	80	£376.38	HHC01911	£60.71
HF760-20.203-AS-FG025-LC-B60-GE-B-XA-H	HHP03118	3/4"	420	90	£376.38	HHC01911	£60.71
HF760-30.115-AS-FG025-LC-B60-GE-B-XA-H	HHP03147	3/4"	420	90	£463.36	HHC01915	£51.33
HF760-30.115-AS-FG025-LC-B60-GF-B-XA-H	HHP03144	1"	420	100	£463.36	HHC01915	£51.33
HF760-30.223-AS-FG025-LC-B60-GE-B-XA-H	HHP03262	3/4"	420	130	£495.88	HHC01919	£72.50
HF760-30.223-AS-FG025-LC-B60-GF-B-XA-H	HHP03167	1"	420	150	£495.88	HHC01919	£72.50
HF760-40.102-AS-FG025-LC-B60-GF-B-XA-H	HHP03701	1"	280	170	£629.29	HHC01943	£82.91
HF760-40.102-AS-FG025-LC-B60-GG-B-XA-H	HHP03721	1 1/4"	280	190	£629.29	HHC01943	£82.91
HF760-40.102-AS-FG025-LC-B60-GH-B-XA-H	HHP03742	1 1/2"	280	200	£629.29	HHC01943	£82.91
HF760-40.132-AS-FG025-LC-B60-GF-B-XA-H	HHP03981	1"	280	210	£640.27	HHC01931	£91.96
HF760-40.132-AS-FG025-LC-B60-GG-B-XA-H	HHP04005	1 1/4"	280	225	£640.27	HHC01931	£91.96
HF760-40.132-AS-FG025-LC-B60-GH-B-XA-H	HHP04022	1 1/2"	280	240	£640.27	HHC01931	£91.96
HF760-40.227-AS-FG025-LC-B60-GF-B-XA-H	HHP04172	1"	280	250	£740.16	HHC01923	£130.17
HF760-40.227-AS-FG025-LC-B60-GG-B-XA-H	HHP04181	1 1/4"	280	280	£740.16	HHC01923	£130.17
HF760-40.227-AS-FG025-LC-B60-GH-B-XA-H	HHP04108	1 1/2"	280	300	£742.41	HHC01923	£130.17
HF760-40.372-AS-FG025-LC-B60-GF-B-XA-H	HHP04272	1"	280	300	£847.72	HHC01927	£190.09
HF760-40.372-AS-FG025-LC-B60-GG-B-XA-H	HHP04282	1 1/4"	280	330	£847.72	HHC01927	£190.09
HF760-40.372-AS-FG025-LC-B60-GH-B-XA-H	HHP04207	1 1/2"	280	350	£847.72	HHC01927	£190.09
HF760-40.517-AS-FG025-LC-B60-GH-B-XA-H	HHP05950	1 1/2"	280	450	£1221.46	HHC01965	£247.68

RETURN FILTERS

UP TO 7 BAR

IN-LINE RETURN FILTERS HF620

These filters are designed specifically to be connected on the return line of any hydraulic circuit to provide safeguard from contaminating particles.
ALUMINIUM HEAD • STEEL BOWL • BUNA-VITON SEALS • C/W VISUAL INDICATOR (HF620-20)
C/W VISUAL INDICATOR (HF620-40) • FLOW RANGE 20-400 L/MIN • MAX WORKING PRESSURE 7 BAR
TESTING PRESSURE 10 BAR • BURST PRESSURE 15BM • 3 AND 6 MICRON AVAILABLE
OPERATING TEMPERATURE -30 +90 (°c) BUNA SEALS -20 +1101 (°c) VITON SEALS • BYPASS VALVE

	ORDER CODE	PORTS	FLOW	PRICE	ELEMENT	PRICE
10 MICRON CELLULOSE						
HF620-20.135-AS-SP010-B17-GE-B-XA-FP-D	HHE13576	3/4"	50	£58.76	HHC01838	£18.92
HF620-20.180-AS-SP010-B17-GE-B-XA-FP-D	HHE18201	3/4"	60	£75.69	HHC01836	£36.78
HF620-30.155-AS-SP010-B17-GG-B-XA-FP-D	HHE20032	1 1/4"	140	£86.47	HHC01834	£28.42
HF620-30.210-AS-SP010-B17-GG-B-XA-GA-M	HHE24123	1 1/4"	160	£86.47	HHC01832	£48.96
HF620-40.155-AS-SP010-B17-GH-B-XC-GA-M	HHE30205	1 1/2"	300	£171.86	HHC01834*	£27.70
HF620-40.210-AS-SP010-B17-GH-B-XC-GA-M	HHE35195	1 1/2"	320	£209.56	HHC01832*	£48.96
25 MICRON CELLULOSE						
HF620-20.135-AS-SP025-B17-GE-B-XA-FP-D	HHE13174	3/4"	60	£56.55	HHC01841	£18.92
HF620-20.180-AS-SP025-B17-GE-B-XA-FP-D	HHE18214	3/4"	70	£65.18	HHC01806	£36.07
HF620-30.155-AS-SP025-B17-GG-B-XA-FP-D	HHE20028	1 1/4"	180	£81.58	HHC01843	£27.70
HF620-30.210-AS-SP025-B17-GG-B-XA-GA-M	HHE25214	1 1/4"	190	£81.58	HHC01816	£48.96
HF620-40.155-AS-SP025-B17-GH-B-XC-GA-M	HHE30190	1 1/2"	340	£162.13	HHC01843*	£28.42
HF620-40.210-AS-SP025-B17-GH-B-XC-GA-M	HHE35131	1 1/2"	360	£197.70	HHC01816*	£48.96

* 2 OFF REQUIRED

HHI03001
HI25-I06-B17-GA-B
P' VISUAL RETURN INDICATOR
£45.96

HHI03004
HI25-I06-B08-GA-B
P' VISUAL RETURN INDICATOR
£45.96

HHI03007
HI25-I07-B08-GA-B
S' ELECTRICAL RETURN INDICATOR
£44.19

HHI03014
HI25-I07-B17-GA-B
S' ELECTRICAL RETURN INDICATOR
£44.19

HHI03017
HI25-I07-B17-GA-B N.C.
ELECTRICAL INDICATOR
£44.19

HHM02530
HI12-M-GA-10
M' PRESSURE/VACUUM GAUGE REAR CONNECTION
£15.91

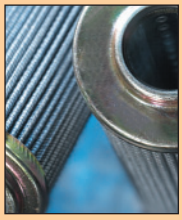

FILTREC
Technical Filtration

ASK FOR A COPY OF OUR FILTREC REPLACEMENT ELEMENTS CATALOGUE.

RETURN LINE FILTERS HF595

Suction or return line filters to be mounted with filter housing completely inside the oil tank.
These can be directly connected to the pump inlet or manifold tank return line.

UP TO 40 BAR

ANODISED ALUMINIUM CONSTRUCTION • BUNA-VITON SEALS • COMPLETE WITH VISUAL INDICATOR AND BYPASS
FLOW RANGE 20-220 L/MIN • MAX WORKING PRESSURE 40BAR (ASK FOR DETAILS)
OPERATING TEMPERATURE -30 +90(°C) BUNA SEALS • OPERATING TEMPERATURE -20 +110(°C) VITON SEALS

	ORDER CODE	PORTS	FLOW	PRICE	ELEMENT	PRICE
10 MICRON FIBREGLASS						
HF595-10.060-AS-FG010-B17-GD-B-Z-GA-N	HHL01433	1/2"	10	£125.49	IKR595E1	£53.81
HF595-20.077-AS-FG010-B17-GE-B-Z-GA-N	HHL01534	3/4"	35	£161.52	HHC01107	£55.65
HF595-20.122-AS-FG010-B17-GF-B-Z-GA-N	HHL01636	1"	60	£179.03	HHC01113	£69.60
HF595-30.195-AS-FG010-B17-GG-B-Z-GA-N	HHL01735	1 1/4"	100	£241.01	HHC01119	£139.06
10 MICRON CELLULOSE						
HF595-10.060-AS-SP010-B17-GD-B-Z-GA-N	HHL01410	1/2"	20	£81.65	HHC01098	£21.66
HF595-20.077-AS-SP010-B17-GE-B-Z-GA-N	HHL01510	3/4"	50	£110.44	HHC01104	£25.56
HF595-20.122-AS-SP010-B17-GF-B-Z-GA-N	HHL01610	1"	90	£119.39	HHC01109	£29.25
HF595-30.195-AS-SP010-B17-GG-B-Z-GA-N	HHL01710	1 1/4"	160	£179.96	HHC01115	£45.65
20 MICRON FIBREGLASS						
HF595-10.060-AS-FG020-B17-GD-B-Z-GA-N	HHL01449	1/2"	15	£123.27	HHC01103	£43.05
HF595-20.077-AS-FG020-B17-GE-B-Z-GA-N	HHL01550	3/4"	45	£127.90	HHC01108	£51.82
HF595-20.122-AS-FG020-B17-GF-B-Z-GA-N	HHL01650	1"	75	£142.68	HHC01114	£64.53
HF595-30.195-AS-FG020-B17-GG-B-Z-GA-N	HHL01750	1 1/4"	120	£237.01	HHC01120	£132.89
25 MICRON CELLULOSE						
HF595-10.060-AS-SP025-B17-GD-B-Z-GA-N	HHL01420	1/2"	25	£81.65	HHC01099	£21.66
HF595-20.077-AS-SP025-B17-GE-B-Z-GA-N	HHL01520	3/4"	60	£110.44	HHC01130	£25.56
HF595-20.122-AS-SP025-B17-GF-B-Z-GA-N	HHL01620	1"	120	£119.39	HHC01110	£29.25
HF595-30.195-AS-SP025-B17-GG-B-Z-GA-N	HHL01720	1 1/4"	190	£179.96	HHC01116	£45.65
60 MICRON WIREMESH						
HF595-10.060-AS-MI060-B17-GD-B-Z-GA-N	HHL01460	1/2"	35	£88.47	HHC01100	£31.23
HF595-20.077-AS-MI060-B17-GE-B-Z-GA-N	HHL01560	3/4"	130	£120.36	HHC01105	£39.97
HF595-20.122-AS-MI060-B17-GF-B-Z-GA-N	HHL01660	1"	160	£135.89	HHC01111	£51.70
HF595-30.195-AS-MI060-B17-GG-B-Z-GA-N	HHL01760	1 1/4"	220	£223.67	HHC01117	£111.89

HHI03001
HI25-I06-B17-GA-B
P' VISUAL RETURN INDICATOR
£45.96

HHI03004
HI25-I06-B08-GA-B
P' VISUAL RETURN INDICATOR
£45.96

HHI03007
HI25-I07-B08-GA-B
S' ELECTRICAL RETURN INDICATOR
£44.19

HHI03014
HI25-I07-B17-GA-B
S' ELECTRICAL RETURN INDICATOR
£44.19

HHI03017
HI25-I07-B17-GA-B N.C.
ELECTRICAL INDICATOR
£44.19

HHM02535
HI12-N-GA-10
MANO VACUUM METER
RAD. CONN
£15.91

FILTREC
Technical Filtration

Filtrec S.r.l. offers a complete range of hydraulic filtration elements. The range also offers a complete product portfolio with Pressure and Return line filter, Spin-on elements, Suction strainers, Filler breathers for hydraulic, lubrication oil, fuel and air.

Moreover Filtrec replacement elements fit in filter housings made by any other manufacturers, i.e. they fit geometrically as well as in terms of their filter performance.

Not only do Filtrec offer a wide variety of filter housings but are also experts in designing and manufacturing filter elements. The original Filtrec elements are ready for mounting in existent filter systems. With this complete range you can choose more than 50 000 different types of filter elements.

Our massive inventory allows you to order any part on short notice without having to provide your own warehousing.

We will gladly take your special requests and provide you with the items you need. All the Filtrec products are designed and engineered for quality professional performance and long term reliability.

TANK TOP RETURN FILTERS

IKRON

UP TO 8 BAR

TANK-TOP RETURN FILTER HF502

These filters are designed specifically to be directly connected on the hydraulic return line on top of the hydraulic reservoir to provide safeguard from contaminating particles.

ALUMINIUM COVER AND HOUSING • STEEL BOWL • BUNA SEALS • C/W VISUAL INDICATOR • FLOW RANGE UP TO 600 L/MIN
ADJUSTABLE BYPASS VALVE • MAX WORKING PRESSURE 8 BAR • TESTING PRESSURE 12 BAR
BURST PRESSURE 16 BAR • OPERATING TEMPERATURE -30 +80 (°C), VITON SEALS -20 +110 (°C)

	ORDER CODE	PORTS	FLOW	PRICE	ELEMENT	PRICE
10 MICRON CELLULOSE						
HF502-10.060-AS-SP010-B17-GC-B-H-Z-XD-GA-N	HHR00512	3/8"	15	£51.39	HHC03423	£14.56
HF502-10.060-AS-SP010-B17-GD-B-H-Z-XD-GA-N	HHR00670	1/2"	20	£51.39	HHC03423	£14.56
HF502-10.060-AS-SP010-B17-GE-B-H-Z-XD-GA-N	HHR01070	3/4"	25	£51.39	HHC03423	£14.56
HF502-20.077-AS-SP010-B17-GD-B-H-Z-XD-GA-N	HHR04570	1/2"	35	£59.84	HHC03554	£17.18
HF502-20.077-AS-SP010-B17-GE-B-H-Z-XD-GA-N	HHR04053	3/4"	40	£59.84	HHC03554	£17.18
HF502-20.122-AS-RP010-B17-GE-B-H-Z-XD-GA-N	HHR10200	3/4"	55	£62.67	HHC03577	£19.74
HF502-20.122-AS-RP010-B17-GF-B-H-Z-XD-GA-N	HHR10530	1"	65	£62.67	HHC03577	£19.74
HF502-20.201-AS-RP010-B17-GE-B-H-Z-XD-GA-N	HHR15555	3/4"	90	£76.00	HHC03612	£24.24
HF502-20.201-AS-RP010-B17-GF-B-H-Z-XD-GA-N	HHR16055	1"	100	£76.00	HHC03612	£24.24
HF502-30.162-AS-RP010-B17-GF-B-H-Z-XD-GA-N	HHR20070	1"	85	£104.42	HHC10149	£29.07
HF502-30.162-AS-RP010-B17-GG-B-H-Z-XD-GA-N	HHR20165	1 1/4"	95	£104.42	HHC10149	£29.07
HF502-30.195-AS-RP010-B17-GF-B-H-Z-XD-GA-N	HHR20370	1"	100	£104.42	HHC10192	£30.71
HF502-30.195-AS-RP010-B17-GG-B-H-Z-XD-GA-N	HHR20466	1 1/4"	120	£104.42	HHC10192	£30.71
HF502-30.239-AS-RP010-B17-GG-B-H-Z-XD-GA-N	HHR43201	1 1/4"	130	£124.47	HHC10501	£34.88
HF502-40.122-AS-RP010-B17-GH-B-H-Z-XD-GA-N	HHR45590	1 1/2"	140	£167.20	HHC45977	£29.75
HF502-40.162-AS-RP010-B17-GL-B-H-Z-XD-GA-N	HHR45706	2"	220	£167.20	HHC01303	£34.88
HF502-40.194-AS-RP010-B17-GL-B-H-Z-XD-GA-N	HHR46751	2"	300	£188.00	HHC00024	£37.90
HF502-40.195-AS-RP010-B17-GH-B-H-Z-XD-GA-N	HHR47415	1 1/2"	205	£188.00	HHC11131	£40.36
HF502-40.195-AS-RP010-B17-GL-B-H-Z-XD-GA-N	HHR48677	2"	305	£188.00	HHC11131	£40.36
HF502-40.239-AS-RP010-B17-GL-B-H-Z-XD-GA-N	HHR52404	2"	400	£301.86	HHC00028	£52.82
25 MICRON CELLULOSE						
HF502-10.060-AS-SP025-B17-GC-B-H-Z-XD-GA-N	HHR00272	3/8"	20	£51.39	HHC03430	£14.56
HF502-10.060.AS.SP025-B17-GD-B-H-Z-XD-GA-N	HHR00756	1/2"	25	£51.39	HHC03430	£14.56
HF502-10.060-AS-SP025-B17-GE-B-H-Z-XD-GA-N	HHR00764	3/4"	30	£51.39	HHC03430	£14.56
HF502-20.077-AS-SP025-B17-GD-B-H-Z-XD-GA-N	HHR04446	1/2"	40	£59.84	HHC03561	£17.18
HF502-20.077-AS-SP025-B17-GE-B-H-Z-XD-GA-N	HHR04062	3/4"	45	£59.84	HHC03561	£17.18
HF502-20.122-AS-RP025-B17-GE-B-H-Z-XD-GA-N	HHR10313	3/4"	60	£62.67	HHC03584	£19.74
HF502-20.122-AS-RP025-B17-GF-B-H-Z-XD-GA-N	HHR10414	1"	70	£62.67	HHC03584	£19.74
HF502-20.201-AS-RP025-B17-GE-B-H-Z-XD-GA-N	HHR16048	3/4"	100	£76.00	HHC03619	£24.24
HF502-20.201-AS-RP025-B17-GF-B-H-Z-XD-GA-N	HHR16421	1"	110	£76.00	HHC03619	£24.24
HF502-30.162-AS-RP025-B17-GF-B-H-Z-XD-GA-N	HHR20086	1"	95	£104.42	HHC10152	£29.07
HF502-30.162-AS-RP025-B17-GG-B-H-Z-XD-GA-N	HHR20187	1 1/4"	105	£104.42	HHC10152	£29.07
HF502-30.195-AS-RP025-B17-GF-B-H-Z-XD-GA-N	HHR20387	1"	120	£104.42	HHC10191	£30.71
HF502-30.195-AS-RP025-B17-GG-B-H-Z-XD-GA-N	HHR20493	1 1/4"	130	£104.42	HHC10191	£30.71
HF502-30.239-AS-RP025-B17-GG-B-H-Z-XD-GA-N	HHR43220	1 1/4"	140	£124.47	HHC10500	£34.88
HF502-40.122-AS-RP025-B17-GH-B-H-Z-XD-GA-N	HHR45701	1 1/2"	150	£193.65	HHC45980	£29.75
HF502-40.162-AS-RP025-B17-GL-B-H-Z-XD-GA-N	HHR45707	2"	240	£167.28	HHC00022	£34.88
HF502-40.194-AS-RP025-B17-GL-B-H-Z-XD-GA-N	HHR45714	2"	320	£188.00	HHC10950	£37.90
HF502-40.195-AS-RP025-B17-GH-B-H-Z-XD-GA-N	HHR47418	1 1/2"	225	£188.00	HHC01205	£40.36
HF502-40.195-AS-RP025-B17-GL-B-H-Z-XD-GA-N	HHR47970	2"	325	£188.00	HHC01205	£40.36
HF502-40.239-AS-RP025-B17-GL-B-H-Z-XD-GA-N	HHR52510	2"	500	£301.86	HHC00029	£52.82

HHI03001
HI25-I06-B17-GA-B
P' VISUAL RETURN INDICATOR
£45.96

HHI03017
HI25-I07-B17-GA-B N.C.
ELECTRICAL INDICATOR
£44.19

HHI03004
HI25-I06-B08-GA-B
P' VISUAL RETURN INDICATOR
£45.96

HHI03007
HI25-I07-B08-GA-B
S' ELECTRICAL RETURN INDICATOR
£44.19

HHI03014
HI25-I07-B17-GA-B
S' ELECTRICAL RETURN INDICATOR
£44.19

HHI03017
HI25-I07-B17-GA-B N.C.
ELECTRICAL INDICATOR
£44.19

HHM02530
HI12-M-GA-10
M' PRESSURE/VACUUM GAUGE REAR CONNECTION
£15.91

HHM02535
HI12-N-GA-10
MANO VACUUM METER RAD. CONN
£15.91

FILTREC
Technical Filtration

ASK FOR A COPY OF OUR FILTREC REPLACEMENT ELEMENTS CATALOGUE.

TANK-TOP RETURN FILTER HF550/HF554

REINFORCED NYLON PLASTIC COVER • ALUMINIUM HOUSING • REINFORCED NYLON BOWL • BUNA SEALS
FLOW RANGE 20-600 L/MIN • ADJUSTABLE BYPASS VALVE • MAX WORKING PRESSURE 8 BAR • TESTING PRESSURE 12 BAR
BURST PRESSURE 16 BAR • OPERATING TEMPERATURE -30 +80°C (BUNA), -20 +110°C (VITON)

UP TO 8 BAR

	ORDER CODE	PORTS	FLOW	PRICE	ELEMENT	PRICE
10 MICRON						
FITTED WITH 10 MICRON AIR BREATHER						
HF554-10.060-AS-SP010-B17-GC-B-S-Z-XA-GA-M-YN	HHD01050	3/8"	15	£75.53	HHC03423	£14.56
HF554-10.060-AS-SP010-B17-GD-B-S-Z-XA-GA-M-YN	HHD01350	1/2"	25	£75.53	HHC03423	£14.56
HF554-20.077-AS-SP010-B17-GE-B-S-Z-XA-GA-M-YN	HHD04310	3/4"	40	£101.94	HHC03554	£17.18
HF554-20.122-AS-RP010-B17-GF-B-S-Z-XA-GA-M-YN	HHD11050	1"	65	£111.01	HHC03577	£19.74
HF554-20.201-AS-RP010-B17-GG-B-S-Z-XA-GA-M-YN	HHD16810	1 1/4"	110	£127.76	HHC03612	£24.24
FITTED COMPLETE WITH FILLER BREATHER						
HF550-30.195-AS-RP010-B17-GG-B-L-Z-XA-GA-M-YN	HHA30150	1 1/4"	120	£131.37	HHC10192	£30.71
HF550-40.195-AS-RP010-B17-GH-B-L-Z-XA-GA-M-YN	HHA46150	1 1/2"	205	£181.04	HHC11131	£40.38
HF550-40.239-FS-RP010-B17-GL-B-L-Z-XA-GA-M-YN	HHA52150	2"	400	£213.06	HHC00028	£84.62
25 MICRON						
FITTED WITH 10 MICRON AIR BREATHER						
HF554-10.060-AS-SP025-B17-GC-B-S-Z-XA-GA-M-YN	HHD01080	3/8"	20	£75.53	HHC03430	£14.56
HF554-10.060-AS-SP025-B17-GD-B-S-Z-XA-GA-M-YN	HHD01380	1/2"	30	£75.53	HHC03430	£14.56
HF554-20.077-AS-SP025-B17-GE-B-S-Z-XA-GA-M-YN	HHD04360	3/4"	45	£101.95	HHC03561	£17.18
HF554-20.122-AS-RP025-B17-GF-B-S-Z-XA-GA-M-YN	HHD11100	1"	70	£124.23	HHC03584	£19.74
HF554-20.201-AS-RP025-B17-GG-B-S-Z-XA-GA-M-YN	HHD16870	1 1/4"	120	£127.76	HHC03619	£24.24
FITTED COMPLETE WITH FILLER BREATHER						
HF550-30.195-AS-RP025-B17-GG-B-L-Z-XA-GA-M-YN	HHA30160	1 1/4"	130	£157.52	HHC10191	£30.71
HF550-40.195-AS-RP025-B17-GH-B-L-Z-XA-GA-M-YN	HHA46165	1 1/2"	225	£206.04	HHC01205	£40.38
HF550-40.239-FS-RP025-B17-GL-B-L-Z-XA-GA-M-YN	HHA52156	2"	500	£236.69	HHC00029	£52.82

HHI03001
HI25-I06-B17-GA-B
P' VISUAL RETURN INDICATOR
£45.96

HHI03004
HI25-I06-B08-GA-B
P' VISUAL RETURN INDICATOR
£45.96

HHI03007
HI25-I07-B08-GA-B
S' ELECTRICAL RETURN INDICATOR
£44.19

HHI03014
HI25-I07-B17-GA-B
S' ELECTRICAL RETURN INDICATOR
£44.19

HHI03017
HI25-I07-B17-GA-B N.C.
ELECTRICAL INDICATOR
£44.19

HHM02530
HI12-M-GA-10
M' PRESSURE/VACUUM GAUGE REAR CONNECTION
£15.91

HHM02535
HI12-N-GA-10
MANO VACUUM METER RAD. CONN
£15.91

IKRON

TANK TOP MOUNTED RETURN LINE FILTERS HF570

Retrofits all top name brands. Ask for details.

ALUMINIUM COVER AND HOUSING • STEEL BOWL AND DIFFUSER • BUNA SEALS
FLOW RANGE 40 - 500 L/MIN • MAX WORKING PRESSURE 8 BAR • TESTING PRESSURE 12 BAR • BURST PRESSURE 16 BAR
OPERATING TEMPERATURE -30 +80 (°C) BUNA SEALS, -20 +110 (°C) VITON SEALS
SECONDARY RETURN PORT AS STANDARD • FILLER CAP FITTED AS STANDARD* • DIFFUSER FITTED AS STANDARD
FULL FLOW MAGNETIC PRE FILTRATION ON THE HYDRAULIC RETURN LINE AS STANDARD

UP TO 8 BAR

	ORDER CODE	PORTS	FLOW	PRICE	ELEMENT	PRICE
10 MICRON						
HF570-20.105-AS-FG010-B08-GD-B-H-R-XA-GA-M-YN-D	HHF06815	1/2"	30	£233.84	HHC01760	£49.67
HF570-20.150-AS-FG010-B08-GE-B-H-R-XA-GA-M-YN-D	HHF14810	3/4"	50	£246.99	HHC01660	£56.37
HF570-20.300-AS-FG010-B08-GF-B-H-R-XA-GA-M-YN-D	HHF20060	1"	90	£460.56	HHC01700	£90.98
HF570-30.190-AS-FG010-B08-GG-B-L-R-XA-GA-M-YN-D	HHF26020	1 1/4"	120	£571.58	HHC01730	£95.34
HF570-30.465-AS-FG010-B08-GH-B-L-R-XA-GA-M-YN-D	HHF36050	1 1/2"	200	£571.58	HHC01480	£164.89
HF570-40.210-AS-FG010-GH-B-L-R-XA-M-YN-D	HHF40113	1 1/2"	200	£728.10	HHC01610	£130.89
HF570-40.290-AS-FG010-GH-B-L-R-XA-M-YN-D	HHF42115	1 1/2"	300	£774.57	HHC01540	£165.05
HF570-40.390-AS-FG010-GL-B-L-R-XA-M-YN-D	HHF44118	2"	340	£998.81	HHC01560	£149.27
HF570-40.480-AS-FG010-GL-B-L-R-XA-M-YN-D	HHF46118	2"	400	£874.22	HHC01580	£238.05
25 MICRON						
HF570-20.105-AS-FG025-B08-GD-B-H-R-XA-GA-M-YN-D	HHF06865	1/2"	40	£237.52	HHC01770	£47.15
HF570-20.150-AS-FG025-B08-GE-B-H-R-XA-GA-M-YN-D	HHF14860	3/4"	60	£248.14	HHC01670	£52.43
HF570-20.300-AS-FG025-B08-GF-B-H-R-XA-GA-M-YN-D	HHF20090	1"	100	£288.32	HHC01710	£85.00
HF570-30.190-AS-FG025-B08-GG-B-L-R-XA-GA-M-YN-D	HHF26030	1 1/4"	130	£460.82	HHC01740	£88.02
HF570-30.465-AS-FG025-B08-GH-B-L-R-XA-GA-M-YN-D	HHF36090	1 1/2"	220	£571.91	HHC01500	£153.35
HF570-40.210-AS-FG025-GH-B-L-R-XA-M-YN-D	HHF40025	1 1/2"	220	£717.92	HHC01620	£121.74
HF570-40.290-AS-FG025-GH-B-L-R-XA-M-YN-D	HHF42125	1 1/2"	320	£761.61	HHC01550	£152.86
HF570-40.390-AS-FG025-GL-B-L-R-XA-M-YN-D	HHF44025	2"	360	£813.73	HHC01570	£195.95
HF570-40.480-AS-FG025-GL-B-L-R-XA-M-YN-D	HHF46125	2"	420	£855.59	HHC01590	£221.42

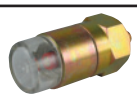

HHI03001
HI25-I06-B17-GA-B
P' VISUAL RETURN INDICATOR
£45.96

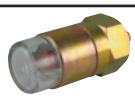

HHI03004
HI25-I06-B08-GA-B
P' VISUAL RETURN INDICATOR
£45.96

HHI03007
HI25-I07-B08-GA-B
S' ELECTRICAL RETURN INDICATOR
£44.19

HHI03014
HI25-I07-B17-GA-B
S' ELECTRICAL RETURN INDICATOR
£44.19

HHI03017
HI25-I07-B17-GA-B N.C.
ELECTRICAL INDICATOR
£44.19

HHM02530
HI12-M-GA-10
M' PRESSURE/VACUUM GAUGE REAR CONNECTION
£15.91

HHM02535
HI12-N-GA-10
MANO VACUUM METER RAD. CONN
£15.91

IKRON

50% OFF ALL PRICES

SUCTION FILTERS

IN-LINE SUCTION FILTERS HF620

These filters are designed specifically to be connected on the suction line of any hydraulic circuit to provide safeguard from contaminating particles.

ALUMINIUM HEAD • STEEL BOWL • BUNA-VITON SEALS • C/W VISUAL INDICATOR (HF620-20)
C/W VISUAL INDICATOR (HF620-40) • FLOW RANGE 30-240 L/MIN • MAX WORKING PRESSURE 7 BAR
TESTING PRESSURE 10 BAR • BURST PRESSURE 15BM • OPERATING TEMPERATURE -30 +90 (°c) BUNA SEALS
-20 +1101 (°c) VITON SEALS • BYPASS VALVE

	ORDER CODE	PORTS	FLOW L/MIN	PRICE	ELEMENT	PRICE
60 MICRON STEEL WIREMESH						
HF620-20.135-AS-MS060-B02-GE-B-XA-GA-M	HHE13054	3/4"	30	£124.13	HHC01822	£54.82
HF620-30.155-AS-MS060-B02-GG-B-XA-GA-M	HHE20532	1 1/4"	110	£172.76	HHC01824	£91.28
HF620-40.155-AS-MS060-B02-GH-B-XC-GA-M	HHE30152	1 1/2"	220	£233.66	HHC01824*	£91.28
125 MICRON STEEL WIREMESH						
HF620-20.135-AS-MS125-B02-GE-B-XA-GA-M	HHE13062	3/4"	40	£124.13	HHC01871	£54.82
HF620-30.155-AS-MS125-B02-GG-B-XA-GA-M	HHE20548	1 1/4"	120	£172.76	HHC01809	£91.28
HF620-40.155-AS-MS125-B02-GH-B-XC-GA-M	HHE30172	1 1/2"	240	£233.66	HHC01809*	£91.28

HHI03004
HI25-I06-B08-GA-B
P' VISUAL RETURN INDICATOR
£45.96

HHI03007
HI25-I07-B08-GA-B
S' ELECTRICAL RETURN INDICATOR
£44.19

HHI03046
HI25-V01-B02-GA-B
V' SUCTION LINE INDICATOR
£44.19

HHI03051
HI25-V02-B02-GA-B
E' ELECTRICAL SUCTION LINE INDICATOR
£47.73

HHM02530
HI12-M-GA-10
M' PRESSURE/VACUUM GAUGE REAR CONNECTION
£15.91

HHV02300
HI13-M-GA-00
PRESSUE VAC GAUGE REAR CONN
£15.91

IKRON

SUCTION LINE FILTERS HF595

IKRON

Suction line filters to be mounted with filter housing completely inside the oil tank.
These can be directly connected to the pump inlet or manifold tank return line.

ANODISED ALUMINIUM CONSTRUCTION • BUNA-VITON SEALS • COMPLETE WITH VISUAL INDICATOR AND BYPASS
FLOW RANGE 0-35 L/MIN • MAX WORKING PRESSURE 40BAR (ASK FOR DETAILS)
OPERATING TEMPERATURE -30 +90(°C) BUNA SEALS • OPERATING TEMPERATURE -20 +110(°C) VITON SEALS

	ORDER CODE	PORTS	MICRON	FLOW	PRICE	ELEMENT	PRICE
125 MICRON BRASS WIREMESH							
HF595-20.077-AS-MB125-B02-GE-B-Z-GA-N	HHL01514	1 1/4"	125	35	£177.32	HHC01131	£41.21
HF595-30.195-AS-MB125-B02-GG-B-Z-GA-N	HHL01717	1 1/4"	125	25	£177.32	HHC01145	£92.72

HHI03046
HI25-V01-B02-GA-B
V' SUCTION LINE INDICATOR
£43.73

HHI03051
HI25-V02-B02-GA-B
E' ELECTRICAL SUCTION LINE INDICATOR
£47.73

HHM02535
HI12-N-GA-10
MANO VACUUM METER RAD. CONN
£15.91

SUCTION STRAINERS

FLOWFIT SUCTION STRAINERS – 125 MICRON WIREMESH

Tank submerged suction strainers are fitted directly on the pump intake and provide filtration of contamination particles to the hydraulic pump system.
CARBON STEEL END CAPS • ALLUMINIUM HEAD • STAINLESS STEEL • MEDIA: 125 MICRON
FLOW RANGE 15-180 L/MIN • OPERATING TEMP +90˚C • SEALS BUNA

	FLOW RATE	A(THREAD)	B(LENGTH)	C(O/D)	PRICE
FSP001	5 L/MIN	3/8"	44	24	£9.86
FSP002	10 L/MIN	3/8"	90	24	£11.51
FSP003	15 L/MIN	1/2"	105	30	£11.99
FSP005	25 L/MIN	3/4"	109	35	£14.99
FSP010	50 L/MIN	1"	139	46	£15.57
FSP012	80 L/MIN	1 1/4"	139	51	£20.14
FSP015	95 L/MIN	1 1/2"	168	60	£20.47
FSP030	130 L/MIN	1 1/2"	200	60	£33.07
FSP040	180 L/MIN	2"	235	70	£34.47
FSP050	330 L/MIN	2 1/2"	211	90	£58.51
FSP060	500 L/MIN	3"	272	100	£71.16

IKRON SUCTION STRAINERS – 125 MICRON WIREMESH

MAX FLOW RATE 300 L/MIN • COLLAPSE PRESSURE 1 BAR • WORKING TEMP -30˚c TO 110˚c
HEAD NYLON • ENDCAP CARBON STEEL • WIREMESH 125 MICRON
AVAILBLE UPON REQUEST: 60,90 AND 250 MICRONS

IKRON	FLOW RATE	A(THREAD)	B(LENGTH)	C(O/D)	PRICE
N/A	12 L/MIN	3/8 BSP	90	46	£21.65
N/A	15 L/MIN	1/2 BSP	105	46	£24.45
N/A	30 L/MIN	3/4 BSP	109	64	£28.50
N/A	35 L/MIN	1 BSP	139	64	£30.07
N/A	40 L/MIN	1 BSP	139	86	£34.94
N/A	45 L/MIN	1 1/4 BSP	139	86	£39.96
N/A	50 L/MIN	1 1/2 BSP	139	86	£36.16
N/A	90 L/MIN	1 1/2 BSP	200	86	£48.15
N/A	120 L/MIN	2 BSP	260	86	£54.69
N/A	95 L/MIN	1 1/2 BSP	151	150	£66.21
N/A	100 L/MIN	2 BSP	151	150	£66.21
N/A	180 L/MIN	2 1/2 BSP	211	150	£105.83
N/A	300 L/MIN	3 BSP	272	150	£123.10
HHB00010	15 L/MIN	3/8 BSP	83	52	£26.00
HHB00013	20 L/MIN	1/2 BSP	83	52	£26.00
HHB04002	20 L/MIN	1/2 BSP	104	70	£30.17
HHB10005	25 L/MIN	1/2 BSP	149	70	£35.12
HHB04005	30 L/MIN	3/4 BSP	104	70	£30.17
HHB04153	45 L/MIN	1 BSP	104	70	£27.34
HHB10060	55 L/MIN	1 1/4 BSP	104	70	£40.80
HHB10002	40 L/MIN	3/4 BSP	149	70	£35.12
HHB10059	55 L/MIN	1 BSP	149	70	£35.12
HHB10459	60 L/MIN	1 1/4 BSP	149	70	£35.12
HHB20002	60 L/MIN	1 BSP	155	99	£45.13
HHB20019	80 L/MIN	1 1/4 BSP	155	99	£45.13
HHB20026	90 L/MIN	1 1/2 BSP	155	99	£45.13
HHB20026	100 L/MIN	2 BSP	155	99	£45.13
HHB24020	60 L/MIN	1 BSP	195	99	£57.61
HHB24002	90 L/MIN	1 1/4 BSP	195	99	£57.61
HHB24080	120 L/MIN	1 1/2 BSP	195	99	£57.61
HHB24075	130 L/MIN	2 BSP	195	99	£57.61
HHB29002	65 L/MIN	1 BSP	228	99	£64.37
HHB30005	110 L/MIN	1 1/4BSP	228	99	£64.37
HHB30002	130 L/MIN	1 1/2 BSP	228	99	£64.37
HHB30030	140 L/MIN	2 BSP	228	99	£64.37
HHB18021	25 L/MIN	1 BSP	109	99	£64.51
HHB18120	40 L/MIN	1 1/4 BSP	109	99	£64.51
	55 L/MIN	1 1/2 BSP	109	99	£64.51
HHB18253	60 L/MIN	2 BSP	109	99	£64.51
HHB42028	200 L/MIN	3 BSP	202	130	£81.94
HHB42002	140 L/MIN	2 BSP	202	130	£81.94
HHB42023	160 L/MIN	2 1/2 BSP	202	130	£81.94
HHB41006	190 L/MIN	3 BSP	162	130	£46.62
HHB40999	130 L/MIN	2 BSP	162	130	£107.51
HHB41002	150 L/MIN	2 1/2 BSP	162	130	£107.51
HHB46034	240 L/MIN	3 BSP	235	130	£80.73
HHB46002	200 L/MIN	2 BSP	235	130	£80.88
HHB46032	220 L/MIN	2 1/2 BSP	235	130	£80.88
HHB52013	300 L/MIN	3 BSP	279	130	£113.07
HHB52002	250 L/MIN	2 BSP	279	130	£113.07
HHB52016	270 L/MIN	2 1/2 BSP	279	130	£113.07

50% OFF ALL PRICES

DIFFUSERS

FLOWFIT DIFFUSERS (LIMITED STOCKS LEFT)

Diffusers reduce aeration, foaming and reservoir noise in any hydraulic fluid application. Designed to help extend all types of pump life by reducing cavitation to pump inlet.

FLOWS RANGING FROM 220 L/MIN – 500 L/MIN • PORT SIZES 2 1/2" – 3" • MADE OF STEEL AND NYLON END CAPS
OTHER SIZES OF DIFFUSERS AVAILABLE UPON REQUEST • FLOW RATE L/MIN WITH AP=0.1 BAR.

ORDER CODE	FLOW RATE L/MIN	THREAD	LENGTH (mm)	O/D (mm)	PRICE
D212	300	2 1/2"	211	150	£96.31
D300	500	3"	272	150	£137.91

FILLER BREATHERS

FLOWFIT FILLER BREATHERS

CARBON STEEL • BASKET: PLASTIC AND 500 MICRON • FILTER: AIR INNER ELEMENT 40 MICRON
GASKETS: RUBBERISED CORK • SCREWS: SELF TAPPING

ORDER CODE	OUTER DIAMETER	TOTAL LENGTH	WIDTH OF BASKET	MOUNTING	PRICE
HHT02379	76.2mm	148mm	49.2mm	6 HOLE P.C.D. 70/73mm	£15.29
FBA5	45mm	109mm	28mm	3 HOLE P.C.D. 41.3mm	£15.29
WITH LOCKING LUG C\W PADLOCK					
FT8C 40/10L	76.2	148mm	49.2mm	6 HOLE P.C.D. 70/73mm	£9.93

NON PRESSURISED BREATHER

CARBON STEEL AND PROTECTED WITH SPECIAL TREATMENT FOR PROTECTION AGAINST ATMOSPHERIC ELEMENTS
BASKET: STEEL • FILTER: AIR ELEMENT 10 MICRON OR 40 MICRON • GASKETS: RUBBERISED CORK
SCREWS: M5 • NON PRESSURISED

DESCRIPTION	ORDER CODE	OUTER DIAMETER	TOTAL LENGTH	BASKET LENGTH	MOUNTING	AIR RATING INNER ELEMENT	PRICE
STANDARD							
HB50-A-8-L-1-05-H-1-R	HHT02100	47mm	27.5mm	64mm	3 HOLE P.C.D 41mm	10	£16.89
HB50-B-8-L-1-05-H-1-R	HHT02120	47mm	27.5mm	64mm	3 HOLE P.C.D 41mm	40	£23.38
WITH CHAIN							
HB50-A-8-L-2-05-H-2-R	HHT02111	47mm	27.5mm	64mm	3 HOLE P.C.D 41mm	10	£25.85
HB50-B-8-L-2-05-H-2-R	HHT02110	47mm	27.5mm	64mm	3 HOLE P.C.D 41mm	40	£16.89
STANDARD							
HB70-A-8-L-1-05-H-1-R	HHT02140	70mm	36mm	97mm	6 HOLE P.C.D 72.5mm	10	£35.27
HB70-B-8-L-1-05-H-1-R	HHT02280	70mm	36mm	97mm	6 HOLE P.C.D 72.5mm	40	£32.49
WITH CHAIN							
HB70-A-8-L-2-05-H-2-R	HHT02370	70mm	36mm	97mm	6 HOLE P.C.D 72.5mm	10	£34.98
HB70-B-8-L-2-05-H-2-R	HHT02380	70mm	36mm	97mm	6 HOLE P.C.D 72.5mm	40	£24.61
WITH SAFETY LOCKING							
HB70-A-8-L-3-05-H-3-R	HHT02409	70mm	36mm	97mm	6 HOLE P.C.D 72.5mm	10	£39.64
HB70-B-8-L-3-05-H-3-R	HHT02400	70mm	36mm	97mm	6 HOLE P.C.D 72.5mm	40	£40.48

PRESSURISED BREATHER

CARBON STEEL AND PROTECTED WITH SPECIAL TREATMENT FOR PROTECTION AGAINST ATMOSPHERIC ELEMENTS
BASKET: STEEL • FILTER: AIR ELEMENT 10 MICRON OR 40 MICRON
GASKETS: RUBBERISED CORK • SCREWS: M5

DESCRIPTION	ORDER CODE	OUTER DIAMETER	TOTAL LENGTH	BASKET LENGTH	MOUNTING	AIR RATING INNER ELEMENT	PRICE
PRESSURISED STANDARD							
HB70-A-9-L-1-05-H-1-R	HHT02200	70mm	146mm	97mm	6 HOLE P.C.D 72.5mm	10	£40.87
HB70-B-9-L-1-05-H-1-R	HHT02340	70mm	146mm	97mm	6 HOLE P.C.D 72.5mm	40	£46.36
PRESSURISED WELD ON							
HB70-A-9-L-1-10-H-1-R	HHT02220	70mm	146mm	97mm	6 HOLE P.C.D 72.5mm	10	£40.41
HB70-B-9-L-1-10-H-1-R	HHT02160	70mm	146mm	97mm	6 HOLE P.C.D 72.5mm	40	£37.52
PRESSURISED WITH CHAIN							
HB70-A-9-L-2-05-H-2-R	HHT02259	70mm	146mm	97mm	6 HOLE P.C.D 72.5mm	10	£43.23
HB70-B-9-L-2-05-H-2-R	HHT02361	70mm	146mm	97mm	6 HOLE P.C.D 72.5mm	40	£40.21

FILLER BREATHER AND AIR FILTER

The filler breather and air filter are built in glass-filled nylon, a light material, strong and non-corrosive by exposure to atmospheric agents. Prevents oil splash during vehicle movement.

MAX AIRFLOW 1600 L/MIN • OPERATING TEMPERATURE -30 +90˚c • FLUID COMPATABILITY: MINERAL OILS AND SYNTHETIC FLUID • CORK RUBBER SEALS • WEIGHT .02KG

ORDER CODE	DESCRIPTION	TOTAL LENGTH	BASKET WIDTH	BASKET LENGTH	O/D OF FILLER CAP	MOUNTING	PRICE
HHS02306	HB120-SP005-XN-G	174mm	47.5mm	97mm	118mm	6 Hole P.C.D 73mm	£50.37
HHS02300	HB120-SP010-XN-G	174mm	47.5mm	97mm	118mm	6 Hole P.C.D 73mm	£50.37

FILTREC
Technical Filtration

ASK FOR A COPY OF OUR FILTREC REPLACEMENT ELEMENTS CATALOGUE.

IKRON

WELD ON FILLER BREATHER

40mm, 65mm, 80mm and 135mm extensions available.

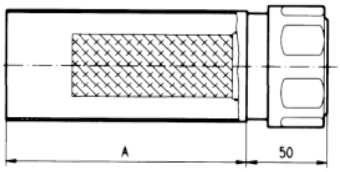

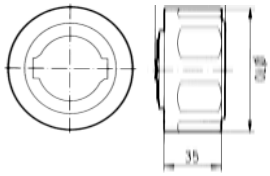

DESCRIPTION	ORDER CODE	OUTER DIAMETER	WELD EXTENSION	BASKET LENGTH	MOUNTING	AIR RATING INNER ELEMENT	PRICE
STANDARD WITH INDICATOR							
HB70-B-8-L-1-10-H-1-R	HHT02300	70mm	-	97mm	6 HOLE P.C.D 72.5mm	40	£24.42
WELD ON MOUNTING 40mm EXTENSION							
HB70-A-8-L-1-15-H-1-R	HHT02148	70mm	40mm	97mm	6 HOLE P.C.D 72.5mm	10	£36.97
HB70-B-8-L-1-15-H-1-R	HHT02305	70mm	40mm	97mm	6 HOLE P.C.D 72.5mm	40	£36.97
WELD ON MOUNTING 65mm EXTENSION							
HB70-A-8-L-1-20-H-1-R	HHT02239	70mm	65mm	97mm	6 HOLE P.C.D 72.5mm	10	£37.28
HB70-B-8-L-1-20-H-1-R	HHT02328	70mm	65mm	97mm	6 HOLE P.C.D 72.5mm	40	£37.28
WELD ON MOUNTING 80mm EXTENSION							
HB70-A-8-L-1-25-H-1-R	HHT02238	70mm	80mm	97mm	6 HOLE P.C.D 72.5mm	10	£37.64
HB70-B-8-L-1-25-H-1-R	HHT02329	70mm	80mm	97mm	6 HOLE P.C.D 72.5mm	40	£37.64
WELD ON MOUNTING 135mm EXTENSION							
HB70-A-8-L-1-30-H-1-R	HHT02240	70mm	135mm	97mm	6 HOLE P.C.D 72.5mm	10	£38.37
HB70-B-8-L-1-30-H-1-R	HHT02320	70mm	135mm	97mm	6 HOLE P.C.D 72.5mm	40	£38.37
WELD ON MOUNTING EXTENSION & CHAIN							
HB70-A-8-L-2-10-H-2-R	HHT02440	70mm	-	97mm	6 HOLE P.C.D 72.5mm	10	£27.04
HB70-B-8-L-2-10-H-2-R	HHT02390	70mm	-	97mm	6 HOLE P.C.D 72.5mm	40	£27.04
WELD ON MOUNTING 40mm EXTENSION & CHAIN							
HB70-A-8-L-2-15-H-2-R	HHT02372	70mm	40mm	97mm	6 HOLE P.C.D 72.5mm	10	£38.72
HB70-B-8-L-2-15-H-2-R	HHT02306	70mm	40mm	97mm	6 HOLE P.C.D 72.5mm	40	£38.72
WELD ON MOUNTING 65mm EXTENSION & CHAIN							
HB70-A-8-L-2-20-H-2-R	HHT02442	70mm	65mm	97mm	6 HOLE P.C.D 72.5mm	10	£39.01
HB70-B-8-L-2-20-H-2-R	HHT02398	70mm	65mm	97mm	6 HOLE P.C.D 72.5mm	40	£39.01
WELD ON MOUNTING 80mm EXTENSION & CHAIN							
HB70-A-8-L-2-25-H-2-R	HHT02443	70mm	80mm	97mm	6 HOLE P.C.D 72.5mm	10	£39.36
HB70-B-8-L-2-25-H-2-R	HHT02394	70mm	80mm	97mm	6 HOLE P.C.D 72.5mm	40	£39.36
WELD ON MOUNTING 135mm EXTENSION & CHAIN							
HB70-A-8-L-2-30-H-2-R	HHT02441	70mm	135mm	97mm	6 HOLE P.C.D 72.5mm	10	£40.09
HB70-B-8-L-2-30-H-2-R	HHT02399	70mm	135mm	97mm	6 HOLE P.C.D 72.5mm	40	£40.09

FLOWFIT

LOCKABLE FILLER BREATHER

Specially suitable for filtering and cleaning the air exchanged between the tank and the outside atmosphere when the volume of fluid in the tank varies. They optimise filling of the tank with hydraulic fluid, retaining impurities and foreign bodies. They come complete with the accessories required for assembly (screws, seals etc.)
The recommended flow rate corresponds to the maximum air flow with a pressure drop of 0.015 bar.

NEW LOCKABLE FILLER BREATHER • PROTECT YOUR OIL AND FUEL • ADD SECURITY NOW TO YOUR SYSTEMS STOP VANDALISM AND THEFT • STOP UNWANTED CONTAMINATION • CHROME PLATED STEEL WITH BAYONET CLOSURE AND KEY LOCK

ORDER CODE	AIR RATING INNER ELEMENT	AIR FLOW L/MIN	O/D	LENGTH OF BASKET	WIDTH OF BASKET	MOUNTING	PRICE
LFB2	40	700	75	80	50	6 HOLE PCD 73MM	£92.33
LFB3	40	700	75	150	50	6 HOLE PCD 73MM	£97.62

FLOWFIT

LOCKABLE CLEANABLE FILLER BREATHER

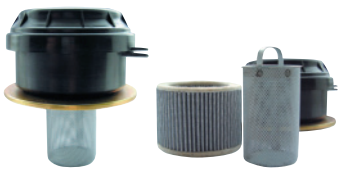

JUST ONE HOLE (65MM±10) IN THE TANK COVER IS NEEDED TO FIX IT
THE 5µm. FILTER ELEMENT CAN BE REMOVED FOR CLEANING OR REPLACEMENT • LOCKABLE BASKET CAN BE REMOVED

ORDER CODE	PRICE	ELEMENTS	PRICE
FBLC	£39.29	FBLCE	£24.72

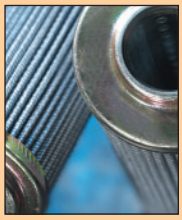

FILTREC
Technical Filtration

ASK FOR A COPY OF OUR FILTREC REPLACEMENT ELEMENTS CATALOGUE.

ANGLED FILLER BREATHER

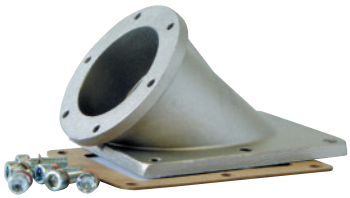

Angled filler breather designed for installation on vertical or inclined sides. Complete with washers and screws.
Angled filler breather plate only – for filler breathers that can be FIXED TO THIS ANGLED FILLER BREATHER SEE P104
FBA25, FBA25L, FT8C101, FT8C102, FT8C401, FT8C402, HHT02380, HHT02340, HHT02550, LFB2 AND LFB3 ARE ALL SUITABLE JUST ONE HOLE (65MM±10) IN THE TANK COVER IS NEEDED TO FIX IT • THE 5µm. FILTER ELEMENT CAN BE REMOVED FOR CLEANING OR REPLACEMENT • LOCKABLE • BASKET CAN BE REMOVED

ORDER CODE	PRICE
AFB1	£54.41

PUSH IN FILLER BREATHER

Filler breather for tank top installation with breather and strainer and complete with safety chains.
Just drill a hole and push in. Now no need to drill fixing holes, just cut a hole in the top of the reservoir with a diameter of 55mm min and 55.3mm max. Wall thickness must not exceed 8mm and not less than 2mm. Assembly contains 3 parts. To install the inside locking ring has to be removed to insert the main body into a pre-drilled hole. Once inserted the inside locking ring has to be installed and then the external locking ring has to be tightened. MAX OPERATING TEMPERATURE 70-80°C

ORDER CODE		ØF	ØD	Ød	h1	h2	h3	h4	S	PRICE
CTR/C	55	88	38	55	80	88	21	2-8		£55.43

SPIN-ON AIR BREATHER

High capacity air filters 700 L/MIN and 1500 L/MIN displacement designed to remove airborne dirt in any hydraulic system.
Please note when fitting a pressurised breather the reservoir must be capable of withstanding pressurisation.

MOUNTED TO TOP OF HYDRAULIC TANK • 3 HOLE FIXING FLANGE
REMOVABLE MAINTENANCE FRIENDLY 5 MICRON SPIN ON CANISTER

ORDER CODE	RATED AIR FLOW	AIR RATING INNER ELEMENT	O/D	LENGTH (B)	WEIGHT KG	PRICE	ELEMENT	PRICE
AIRF1	0.7m3MIN	5 MICRON	96MM	114MM	0.7	£95.99	RF1	£68.21
AIRF2	1.5m3MIN	5 MICRON	96MM	196MM	0.7	£100.24	RF2	£71.45

AIR BREATHERS

The air filters AF105 series are built in steel and are protected with a special treatment to protect them against atmospheric corrosion.

UPON REQUEST M12, M18, M22 x 1.5 THREADS

ORDER CODE	THREAD	LENGTH	O/D	MICRON	AIRFLOW	WEIGHT	PRICE
HHS02100	1/4"	54mm	48mm	5 Micron	200(f/min)	0.11	£18.42
HHS02106	3/8"	54mm	48mm	5 Micron	200(f/min)	0.13	£18.29
HHS02131	1/2"	74mm	67mm	5 Micron	500 (f/min)	0.27	£23.06
HHS02109	1/4"	54mm	48mm	10 Micron	200(f/min)	0.11	£14.85
HHS02101	3/8"	54mm	48mm	10 Micron	200(f/min)	0.13	£14.85
HHS02134	1/2"	74mm	67mm	10 Micron	500 (f/min)	0.27	£18.77

PLASTIC HYDRAULIC THREADED AIR BREATHERS

PLASTIC THREADED HYDRAULIC BREATHERS WITH 40 MICRON FILTRATION

ORDER CODE	THREAD	LENGTH	O/D	PRICE
PH8	3/8"	32mm	34.5mm	£13.15
PH10	1/2"	38mm	40mm	£13.15
PH12	3/4"	38.5mm	45mm	£18.40
PH13	1"	47mm	50mm	£19.13
PHB	1"	68mm	84mm	£19.15

STEEL HYDRAULIC THREADED AIR BREATHERS

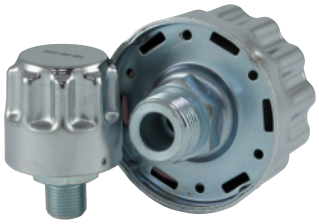

STEEL THREADED HYDRAULIC BREATHERS WITH 40 MICRON FILTRATION

ORDER CODE	THREAD	LENGTH	O/D	PRICE
BH6	1/4"	63mm	45mm	£13.15
BH8	3/8"	63mm	45mm	£13.15
BH10	1/2"	63mm	45mm	£19.75
BH12	3/4"	75mm	77mm	£21.05
BH13	1"	75mm	77mm	£21.75
BHB	1"	100mm	80mm	£21.75

LEVEL INDICATORS

Level indicators are mounted on hydraulic reservoirs containing oil based fluids to allow the monitoring of the oil level. We also offer options with thermometer to monitor the temperature.

FILTREC LEVEL INDICATORS

OPERATING TEMPERATURE -30 +80 (°c) • THERMOMETER DOUBLE SCALE 0–100 (°c) / 30–210°F
ANODIZED ALUMINIUM FRAME WITH NYLON FACE • HEADS: NYLON • SCREWS: ZINC STEEL • SEAL: BUNA-N

ORDER CODE	HOLE CENTRES	BOLT THREAD SIZE	LENGTH	WIDTH	PRICE
FL1M10	76mm	M10x1.5	106mm	36mm	£13.85
FL1M12	76mm	M12x1.75	106mm	36mm	£13.85
FL1TM10*	76mm	M10x1.5	106mm	36mm	£15.91
FL1TM12*	76mm	M12x1.75	106mm	36mm	£15.91
FL2M10	127mm	M10x1.5	157mm	36mm	£17.63
FL2M12	127mm	M12x1.75	157mm	36mm	£17.63
FL2TM10*	127mm	M10x1.5	157mm	36mm	£20.94
FL2TM12*	127mm	M12x1.75	157mm	36mm	£20.94
FL3M10	254mm	M10x1.5	284mm	36mm	£37.86
FL3M12	254mm	M12x1.75	284mm	36mm	£37.86
FL3TM10*	254mm	M10x1.5	284mm	36mm	£40.42
FL3TM12*	254mm	M12x1.75	284mm	36mm	£40.42

* C/W THERMOMETER DOUBLE SCALE 0–100°C / 30–210°F

ELECTRIC TYPE LEVEL INDICATORS

FLUID LEVEL OBSERVED AT 150° ANGLE• O RING SEALS ON EVERY CONNECTION POINT GUARANTEEING LEAKAGE PROOF FIXATION • THERMOMETER SCALE 0-100°C MIN/MAX OPERATING TEMPERATURE -20 +80°C MAX GAUGE PRESSURE 0.5BAR • SEALS 70° SHORE • IP65 ELECTRIC PROTECTION • MAXIMUM CONTACT LOAD • ALTERNATIVELY CURRENT UP TO 220V (0.5A) • DIRECT CURRENT UP TO 125V (0.3A)

- Gauge manufactured with oil proof plastic
- Suitable for use on all ac up to 220 A/AC
- DC up to 125v/dc.
- Electric features include normally open (n.a) electric contact in non alarm position

PART NUMBER	HOLE CENTRES	BOLT THREAD SIZE	PRICE
LIE2	127MM	M12 X 1.75	£119.21
LIE 3	254MM	M12 X 1.75	£160.74

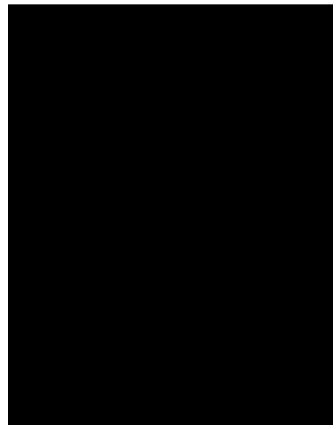

FILTREC
Technical Filtration

Filtrec S.r.l. offers a complete range of hydraulic filtration elements. The range also offers a complete product portfolio with Pressure and Return line filter, Spin-on elements, Suction strainers, Filler breathers for hydraulic, lubrication oil, fuel and air.

Moreover Filtrec replacement elements fit in filter housings made by any other manufacturers, i.e. they fit geometrically as well as in terms of their filter performance.

Not only do Filtrec offer a wide variety of filter housings but are also experts in designing and manufacturing filter elements. The original Filtrec elements are ready for mounting in existent filter systems. With this complete range you can choose more than 50 000 different types of filter elements.

Our massive inventory allows you to order any part on short notice without having to provide your own warehousing.

We will gladly take your special requests and provide you with the items you need. All the Filtrec products are designed and engineered for quality professional performance and long term reliability.

ELECTRIC LEVEL INDICATORS

FLOATING LEVEL GAUGE BSP AND 3 HOLE MOUNT

Tank-top mounted they give an electrical signal when the minimum fluid level is reached. They are always supplied with open contacts.

With just one contact you have both possible electric connections normally open or normally closed.

- Min or min/max level monitoring
- Compatible with mineral oils, oil-water emulsions, diesel and water
- Unsinkable floater
- Electric contact hermetically sealed inside the floater rod
- Flanged or nut type fixation to tank cover

PART NUMBER	LENGTH (LO)	PRICE
FLG100	100mm	£111.58
FLG150	150mm	£114.83
FLG200	200mm	£117.34
FLG250	250mm	£119.63
FLG300	300mm	£122.89
FLG350	350mm	£122.89
FLG400	400mm	£128.22
FLG450	450mm	£128.22
FLG550	500mm	£135.14

ORDER JUST THE ONE AND YOU HAVE ALL THREE FIXING POINTS IN ONE LEVEL GAUGE

FIXATION
Fig 1

FIXATION
Fig 2

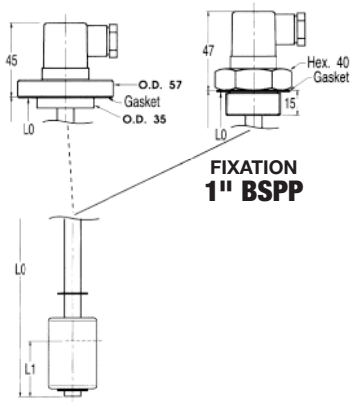

FIXATION
1" BSPP

VOLTAGE	TEMPERATURE RANGE	Electric connections
All voltages DC/AC up to 240V	-10 to +80°C	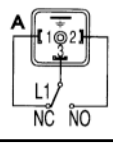
MAX CURRENT	**MAX PRESSURE**	
220V, 60W, 60VA, A1	12 Bar	

ELECTRIC FLOAT LEVEL SWITCHES 2 HOLE MOUNT

Material: Flange in thermoplastic, brass stem, stop rings in bronze, NBR float. NB:Customized lengths can be supplied on request. Max length 1500mm Executions also available in accordance with the Directive ATEX 94//9/EC on intrinsic safety equipment with marking II 1/2 G Ex ia IIB T6.

PART NUMBER	LENGTH (A)	PRICE
LM1CFPA150	150	£114.82
LM1CFPA200	200	£117.51
LM1CFPA250	250	£119.63
LM1CFPA300	300	£122.89
LM1CFPA350	350	£122.89
LM1CFPA400	400	£128.22
LM1CFPA450	450	£128.22
LM1CFPA500	500	£135.14

LM1CFPA...
LM2CFPA...

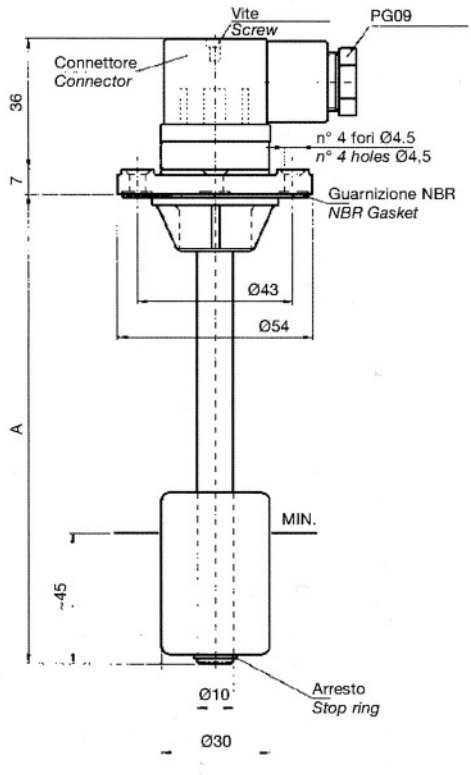

Collegamenti elettrici standard
Standard electrical connection

LM1CFPA

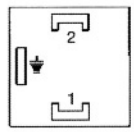

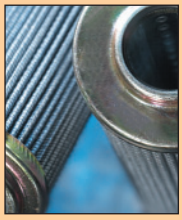

FILTREC
Technical Filtration

ASK FOR A COPY OF OUR FILTREC REPLACEMENT ELEMENTS CATALOGUE.

ELECTRIC FLOATING LEVEL GAUGES

FLOWFIT

SERIE NS 1
MIT 1 SCHALTKONTAKT
WITH 1 SWITCH CONTACT

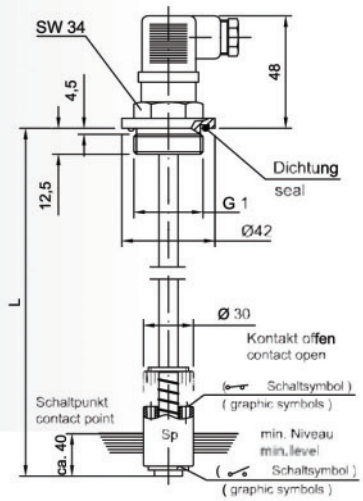

ART.-NR. PART NO.	TYP TYPE	L	£ LIST
FLG1420	NS 1-NO/100	100	**£95.83**
FLG1422	NS 1-NO/150	150	**£96.76**
FLG1424	NS 1-NO/200	200	**£97.68**
FLG1426	NS 1-NO/250	250	**£99.97**
FLG1428	NS 1-NO/300	300	**£102.26**
FLG1430	NS 1-NO/350	350	**£103.18**
FLG1432	NS 1-NO/400	400	**£107.30**
FLG1434	NS 1-NO/500	500	**£111.88**

Kontakt offen bei max. Niveau
contact open with max. level

Kontakt geschlossen bei min. Niveau
contact closed with min. level

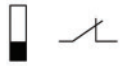

Durch Drehen des Schwimmers wird der Kontakt geändert auf:
Max. Niveau = Kontakt geschlossen
Min. Niveau = Kontakt offen

By turning the float the contact is changed to:
max. level = contact closed
min. level = contact open

PRODUKTBESCHREIBUNG
- Elektrische Niveauüberwachung
- Geeignet für Mineralöle, Diesel und Benzin
- 1 Schaltkontakt
- Elektrische Schaltung für Niveau, min./max.
- Standardausführung Niveau max = Kontakt offen

DESCRIPTION
- Electrical level supervision
- Appropriate for mineral oil, diesel and benzine
- 1 switch contact
- Electrical circuit for level, min/max
- Standard version level max = contact open

TECHNISCHE DATEN
TECHNICAL DATA
- **Kontaktrohr / Stem:** Messing / Brass
- **Schwimmer / Float:** Nylon
- **Max. Temp:** 80° C
- **Schutzart / Protection:** IP 65
- **Hysterese / Hysteresis:** 2-3 mm
- **Max. Volt / Max voltage:** 250 VAC
- **Max. Schaltstrom / Max switch current:** Niveau 1,3 A/Level 1.3 A
- **Power AC/DC Niveau/ Level:** 80 W/VA

NIVEAU-SCHWIMMSCHALTER LEVEL SWITCHES

SERIE NS 2
MIT 2 SCHALTKONTAKTEN
WITH 2 SWITCH CONTACTS

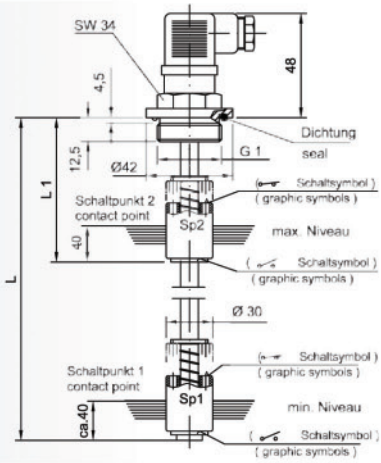

ART.-NR. PART NO.	TYP TYPE	L	L_1	£ LIST
FLG1457	NS 2-NO/250/105	250	105	**£272.40**
FLG1459	NS 2-NO/300/105	300	105	**£272.40**
FLG1461	NS 2-NO/350/115	350	115	**£272.40**
FLG1463	NS 2-NO/400/115	400	115	**£282.92**
FLG1465	NS 2-NO/500/125	500	125	**£282.92**

Kontakt offen bei max. Niveau
contact open with max. level
Sp 1

Kontakt geschlossen bei min. Niveau
contact closed with min. level

Kontakt offen bei max. Niveau
contact open with max. level
Sp 2

Kontakt geschlossen bei min. Niveau
contact closed with min. level

Durch Drehen des Schwimmers wird der Kontakt geändert auf:
Max. Niveau = Kontakt geschlossen
Min. Niveau = Kontakt offen

By turning the float the contact is changed to:
max. level = contact closed
min. level = contact open

PRODUKTBESCHREIBUNG
- Elektrische Niveauüberwachung
- Geeignet für Mineralöle, Diesel und Benzin
- 2 Schaltkontakte
- Elektrische Schaltung für Niveau, min./max.
- Standardausführung Niveau max = Kontakt offen

DESCRIPTION
- Electrical level supervision
- Appropriate for mineral oil, diesel and benzine
- 2 switch contacts
- Electrical circuit for level, min/max
- Standard version level max = contact open

TECHNISCHE DATEN
TECHNICAL DATA
- **Kontaktrohr / Stem:** Messing / Brass
- **Schwimmer / Float:** Nylon
- **Max. Temp:** 80° C
- **Schutzart / Protection:** IP 65
- **Hysterese / Hysteresis:** 2-3 mm
- **Max. Volt / Max voltage:** 250 VAC
- **Max. Schaltstrom / Max switch current:** Niveau 1,3 A/Level 1.3 A
- **Power AC/DC Niveau/ Power AC/DC Level:** 80 W/VA

SERIE NS 1-TE
MIT TEMPERATURSCHALTER
WITH TEMPERATURE SWITCH

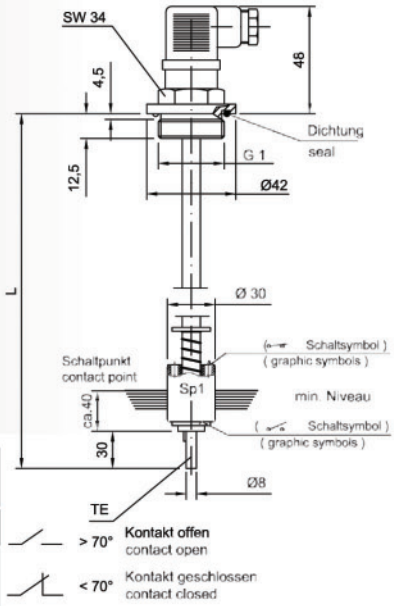

ART.-NR. PART NO.	TYP TYPE	L	TEMP.	£ LIST
FLG1502	NS 1-NO/150 TE 70° NC	150	70 °	£191.21
FLG1504	NS 1-NO/200 TE 70° NC	200		£191.21
FLG1505	NS 1-NO/240 TE 70° NC	240		£191.21
FLG1506	NS 1-NO/250 TE 70° NC	250		£191.21
FLG1508	NS 1-NO/300 TE 70° NC	300		£191.21
FLG1510	NS 1-NO/350 TE 70° NC	350		£191.21
FLG1512	NS 1-NO/400 TE 70° NC	400		£204.97
FLG1513	NS 1-NO/450 TE 70° NC	450		£204.97
FLG1514	NS 1-NO/500 TE 70° NC	500		£204.97

Durch Drehen des Schwimmers wird der Kontakt geändert auf:
Max. Niveau = Kontakt geschlossen
Min. Niveau = Kontakt offen

By turning the float the contact is changed to:
max. level = contact closed
min. level = contact open

PRODUKTBESCHREIBUNG
- Elektrische Niveau- und Temperaturüberwachung
- Geeignet für Mineralöle, Diesel und Benzin
- 1 Schaltkontakt Niveau / 1 Schaltkontakt Temperatur
- Elektrische Schaltung für Niveau, min./max.
- Standardausführung Niveau max = Kontakt offen
- Elektrische Schaltung für Temperatur < 70° Kontakt geschlossen

DESCRIPTION
- Electrical level supervision
- Appropriate for mineral oil, diesel and benzine
- 1 switch contact
- Electrical circuit for level, min/max
- Standard version level max = contact open

TECHNISCHE DATEN
TECHNICAL DATA
- **Kontaktrohr / Stem:** Messing / Brass
- **Schwimmer / Float:** Nylon
- **Max. Temp:** 80° C
- **Schutzart / Protection:** IP 65
- **Hysterese / Hysteresis:** 2-3 mm
- **Max. Volt / Max voltage:** 250 VAC
- **Max. Schaltstrom / Max switch current:** Niveau 1,3 A Temperatur 0,5 A
- **Power AC/DC Niveau/Level:** 80W/VA
- **Power AC/DC Temperatur:** 10W/VA

SERIE NS 1-VR
MIT VARIABLEN SCHALTKONTAKT
WITH VARIABLE SWITCH CONTACT

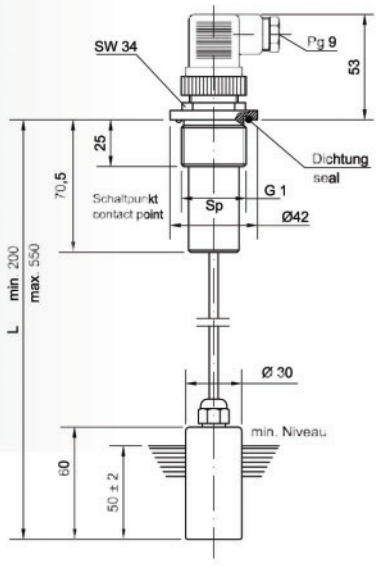

ART.-NR. PART NO.	TYP TYPE	£ LIST
FLG1410	NS 1-VR (200-550 mm)	£201.32

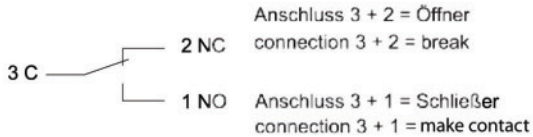

PRODUKTBESCHREIBUNG
- Elektrische Niveauüberwachung
- Geeignet für Mineralöle, Diesel und Benzin
- Variabel einstellbar von 200-500 mm durch Justierung/ Kürzung des Kontaktrohres auf die gewünschte Länge

DESCRIPTION
- Electrical level supervision
- Appropriate for mineral oil, diesel and benzine
- The indication level can be adjusted between 200-500 mm by cutting the stem of the length required

TECHNISCHE DATEN
TECHNICAL DATA
- **Kontaktrohr / Stem:** Indox aisi 304
- **Schwimmer / Float:** NBR
- **Max. Temp:** - 15... + 80° C
- **Hysterese / Hysteresis:** 2-3 mm
- **Kontaktart / Type of contact:** Reed
- **Max. Volt / Max voltage:** 230 VAC
- **Max. Schaltstrom / Max. switch current:** Niveau 1,0 A/Level 1.0 A
- **Schutzart / Protection:** IP 65
- **Power AC/DC Niveau / Power AC/DC Level:** 50 W/VA

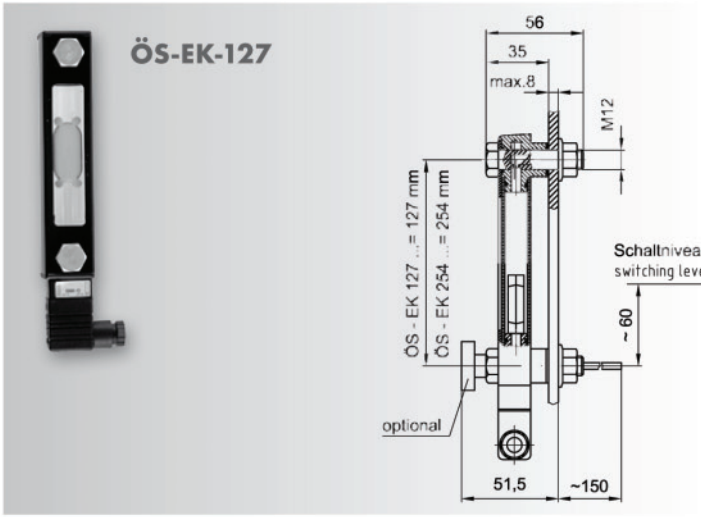

PRODUKTBESCHREIBUNG

- Geeignet für Hydrauliköle HL und HLP
- Optionaler Einsatz mit Fühlertermometer
- Wahlweise als Öffner oder Schließer erhältlich
- Leistungsdose gemäß DIN EN 175301-803-B/ISO6952

DESCRIPTION

- Suitable for hydraulic oils HL and HLP
- Optional use with probe therm
- Alternatively available as brake contact or make contact
- Contact box acc. to DIN EN 175301-803-B / ISO6952

ART.-NR. PART NO.	TYP TYPE	£ LIST
FLG2366	ÖS-EK-127-FPM-C/M12 R/L	£176.10
FLG2367	ÖS-EK-127-FPM-O/M12 R/L	£176.10
FLG2377	ÖS-EK-127-FPM-CT/M12 R/L	£233.31
FLG2378	ÖS-EK-127-FPM-OT/M12 R/L	£233.31
FLG2387	ÖS-EK-254-FPM-C/M12 R/L	£219.20
FLG2382	ÖS-EK-254-FPM-O/M12 R/L	£219.20
FLG2383	ÖS-EK-254-FPM-CT/M12 R/L	£294.85
FLG2386	ÖS-EK-254-FPM-OT/M12 R/L	£294.85

WERKSTOFFE

- **Gehäuse:** AL (pulverbeschichtet)
- **Stopfen, Schauglas:** PA
- **Schwimmer:** PA

MATERIALS

- **Case:** AL (power coated)
- **Plug, inspection glass:** PA
- **Swimmer:** PA

TECHNISCHE DATEN

- **Druckmitteltemperaturbereich:** -20°C ... +80°C
- **Anzeigebereich Fühlerthermometer:** 0°C bis +100°C
- **Behältervorspanndruck:** max. 1 bar
- **Dichtungen:** Viton
- **Schraubenanzugsmoment:** 8 Nm max.

TECHNICAL DATA

- **Temperature range of medium:** -20°C ... +80°C
- **Indication range probe therm:** 0°C up +100°C
- **Tank pressure:** max. 1 bar
- **Gaskets:** viton
- **Screw starting torque:** 8 Nm max.

Typ C

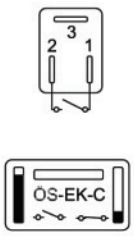

Typ O

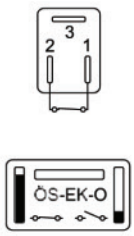

ELEKTRISCHE ANSCHLÜSSE / FUNKTION

- **Kontaktbelastung:** max. 10 W (Typ C) max. 5 W (Typ O)
- **Schaltspannung:** 50 VAC / DC
- **Schaltstrom:** 0.25 A
- **Leistungsdose mit PG9:** Schutzart IP 65 Anschluss 3 nicht belegt

ELECTRICAL CONNECTIONS / FUNCTION

- **Contact load:** max. 10 W (Type C) max. 5 W (Type O)
- **Turn-on voltage :** 50 VAC/DC
- **Switching current:** 0.25 A
- **Electrical switch PG9:** connection 3 not engaged
- **System of protection IP 65** connection 3 not engaged

BESTELLSCHLÜSSEL ORDERING CODE

ÖS-EK 127 FPM C - M12 R/L

- TYP ÖS-EK
- NG 127/254
- **Dichtung** / **Gasket** / Viton (Standard) FPM
- **Befestigungsschrauben** / **Fixing Screws** / (Standard)
- **Abgang Leistungsdose*** / **Electrical Switch*** / rechts/links* / right/left*
- **Elektrische Funktion** / **Electrical Function**
  - C: Schließer, schließt bei min. Niveau / Make contact, closes at min. level
  - O: Öffner, öffnet bei min. Niveau / Brake contact, opens at min. level
- **Fühlerthermometer** / **Probe therm**
  - – : ohne Fühlerthermometer / without probe therm
  - T: mit Fühlerthermometer 200 mm / with probe therm 200mm

* Beim Anschluss der elektrischen Kontakte kann die Abgangsrichtung der Leitungsdose (rechts/links) der Typen C und O selber bestimmt werden.

* Regarding the connection of the electrical contacts the direction of the contact box (right or left) for the types C and O can be determinded by the user.

FILTREC Technical Filtration

FILTREC SIMPLEX AND DUPLEX INDUSTRIAL FILTERS

Filtrec industrial filters meet the most sophisticated requirements of modern equipment and plant applications. High efficiency, high dirtholding capacity and reduced differential pressure are obtained with Filtrec elements.

INLINE SIMPLEX FILTERS

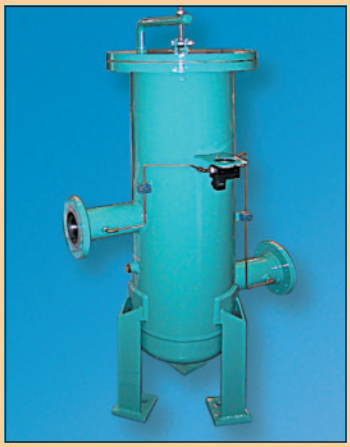

OUTSIDE TO INSIDE FLOW DIRECTION

IFS—RHR RANGE

MAX FLOW: 4500 L/MIN
MAX WORKING PRESSURE: 25 BAR

FILTREC Technical Filtration

INLINE SIMPLEX FILTERS

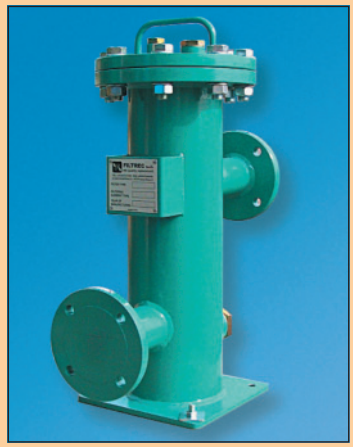

OUTSIDE TO INSIDE FLOW DIRECTION

IFS–R4 RANGE

MAX FLOW: 4500 L/MIN
MAX WORKING PRESSURE: 25 BAR

FILTREC Technical Filtration

INLINE SIMPLEX FILTERS

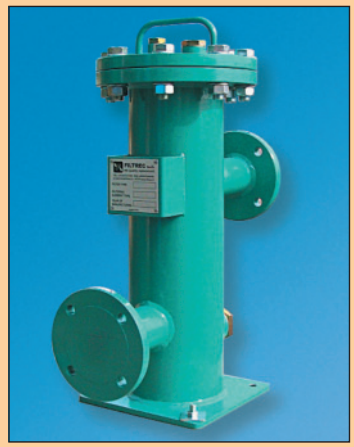

INSIDE TO OUTSIDE FLOW DIRECTION

IFS—R9 RANGE

MAX FLOW: 4500 L/MIN
MAX WORKING PRESSURE: 25 BAR

FILTREC Technical Filtration

INLINE DUPLEX FILTERS

OUTSIDE TO INSIDE FLOW DIRECTION

IFD—RHR RANGE

MAX FLOW: 4500 L/MIN
MAX WORKING PRESSURE: 25 BAR

FILTREC Technical Filtration

INLINE DUPLEX FILTERS

OUTSIDE TO INSIDE FLOW DIRECTION

IFD—R4 RANGE

MAX FLOW: 4500 L/MIN
MAX WORKING PRESSURE: 25 BAR

FILTREC Technical Filtration

INLINE DUPLEX FILTERS

INSIDE TO OUTSIDE FLOW DIRECTION

IFD—R9 RANGE

MAX FLOW: 4500 L/MIN
MAX WORKING PRESSURE: 25 BAR

FILTREC Technical Filtration

ASK FOR INFORMATION ON THE ABOVE WHICH CAN BE EMAILED, FAXED, SENT IN THE POST OR DOWNLOADED FROM www.flowfitonline.com

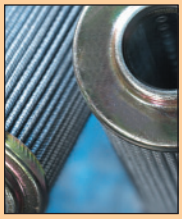

FILTREC Technical Filtration

ASK FOR A COPY OF OUR FILTREC REPLACEMENT ELEMENTS CATALOGUE.

FLOWFIT SIGHT GLASSES, PLUGS AND BREATHERS

FK
OIL LEVEL SIGHT GLASSES (METAL)

- Aluminium threaded with glass face • Max temp. 150°c
- Max pressure 3 Bar • Knob type • Nitrile seals

Order No.	Thread BSP	Width MM	Price
FK14	1/4"	19	£4.01
FK38	3/8"	22.5	£5.09
FK12	1/2"	27	£6.87
FK34	3/4"	32	£10.96
FK10	1"	38	£11.68
FK114	1 1/4"	48	£22.41
FK112R	1 1/2"	55	£12.78
FK20R	2"	76	£134.14

OIL LEVEL SIGHT GLASS (PLASTIC)

- Threaded Oil Level indicator, hex head with shoulder. Utilised in oiltanks, gearboxes and general machinery.
- This threaded level indicator allows a pressure of 3 bar.
- Asbestos free flat gasket. (available in NBR 70 shore on request)
- Manufactured from high density Polymide resin, which offers high mechanical resistance and withstands oil, gasoline, fuel and most solvents.

SLNS
THREADED OIL LEVEL INDICATORS

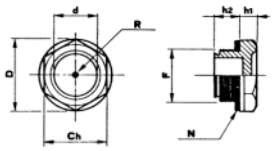

Order No.	Ch	F	D	d	h1	h2	Nm	Price
SLNS14	17	1/4" BSP	20	15	7	8	6	£2.76
SLN38	18	3/8" BSP	22	14	6.5	10.5	8	£3.30
SLNS12	24	1/2"BSP	28	16	8	11	12	£3.25
SLNS34	30	3/4"BSP	35	21	8	12	16	£8.68
SLNS1	35	1" BSP	43	32	11	12		£6.15
SLNS114	42	1 1/4" BSP	51	33	10	16		£12.62
SLNS112	50	1 1/2" BSP	58	40	10	20		£15.89
SLNS2	64	2" BSP	74	48	12	20		£21.81

SLNT
THREADED OIL LEVEL INDICATORS WITH CONTRAST SCREEN FOR CLEARER INDICATION OF THE OIL LEVEL

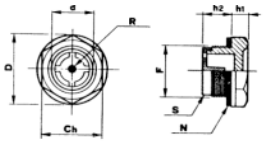

R = Red Indicator point
N = Gasket
S = Contrast Screen

Order No.	Ch	F	D	d	h1	h2	Nm	Price
SLNT38	18	3/8" BSP	22	14	6.5	10.5	8	£3.82
SLNT12	24	1/2" BSP	28	16	8	11	12	£4.27
SLNT34	30	3/4" BSP	35	21	8	12	16	£5.86
SLNT1	35	1" BSP	43	32	11	12		£8.01
SLNT114	42	1 1/4" BSP	51	33	10	16		£12.91
SLNT112	50	1 1/2" BSP	58	40	10	20		£16.48
SLNT2	64	2" BSP	74	48	12	20		£22.21

LSB
OIL LEVEL INDICATOR IN TRANSPARENT THERMO PLASTIC

- Dome shaped Level Indicator, transparent, with incorporated hex, which enables to read Oil level an angle.
- Material is transparent Polymide resin, which resists most chemicals, oil, gasoline, fuel and a variety of solvents.
- Maximum operating temperature: 100°C.
- Flat asbestos free, oil resistant seal.
- Nm = Applicable maximum tightening torque.

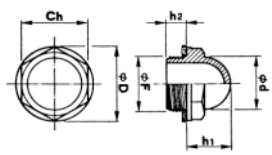

Order No.	Thread BSP.	Ch	D	d	h1	h2	Nm	Price
LSB38	3/8"	19	22	15	16	10	8	£3.67
LSB12	1/2"	24	28	20	17	10	12	£4.13
LSB34	3/4"	30	35	25	20	10	16	£5.63
LSB1	1"	36	42	31	24	10.5		£7.71

CF2
CF - DOME SHAPED THREADED OIL LEVEL INDICATOR
GF - STEEL MOUNTING FLANGE

- Transparent halfball shaped level indicator, available with 2" and 3" threaded weld-on steel flanges.
- Made from Thermo Polycarbonate for optimal shock resistance and ensuring unbreakability.
- Product is utilised on truck/tankers and larger reservoirs containing liquids.

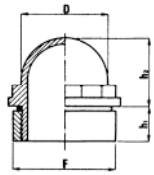

Order No.	Thread BSP	D	h1	h2	Price
CF2	2"	59	22	32	£7.95
CF3	3"	85	32	63	£22.24
GF2	2"	70	20		£29.83
GF3	3"	102	30		£37.52

TCNB
LOW PROFILE PLUGS

- Socket style low profile threaded plug.
- This low profile plug is made from reinforced Thermoplastic and provides an excellent mechanical resistance at both low and higher temperatures. (Max. 110°C.)
- Flat asbestos free seal
- For tightening torques (Nm) see table below.
- Special plugs in Polymide IXEF 1022 are available for increased mechanical torque and temperatures up to 150°C. (see table Nm (IXEF)).

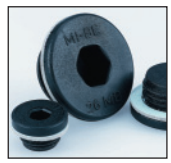

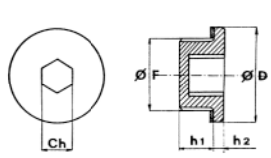

Type	F	Ch	D	h1	h2	Nm	Nm(IXEF)	Price
TCNB14	1/4" BSP	6	20	8	2.5	3	5	£2.09
TCNB38	3/8" BSP	8	22.5	10.5	3.5	6		£2.31
TCNB12	1/2" BSP	10	28.5	10.5	3.5	8	10	£2.76
TCNB34	3/4" BSP	12	35	10.5	4	10	18	£3.76

TCN
OIL FILL PLUGS
TCNS
OIL FILL PLUG WITH BREATHER HOLE
TSN
OIL DRAIN PLUG

- Hex threaded oil fill plug in Thermoplastic material ensuring high mechanical resistance at both low and higher temperature (max. 100/110°C), dimensional stability and shock resistant.
- Flat asbestos free oil resistant seal.
- Style TCN and TCNS have the UNI fill symbol and the word OIL molded on top; the model TCNS has a breather hole located in the side of the hex with a diameter of 2-2.5mm.
- Style TSN has the UNI drain symbol on top.

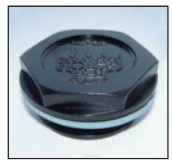

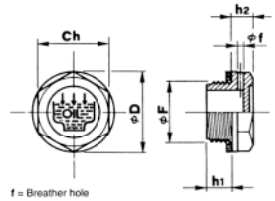

Type	F	Ch	D	h1	h2	Nm	Price
TCN							
TCN14	1/4"BSP	17	19.5	9	7	5	£1.93
TCN38	3/8" BSP	18	22	10	7.5	8	£2.18
TCN12	1/2" BSP	24	28	11	7.5	9	£2.60
TCN34	3/4" BSP	30	34	11	9	11	£3.55
TCN1	1" BSP	35	42	12	10.5		£4.92
TCN114	1 1/4" BSP	42	51	13.5	12		£7.35
TCN112	1 1/2" BSP	50	58	16	10		£8.29
TCN2	2" BSP	64	74	16	12		£13.75
TCNS							
TCNS14	1/4"BSP	17	19.5	9	7	5	£1.67
TCNS38	3/8" BSP	18	22	10	7.5	8	£1.84
TCNS12	1/2" BSP	24	28	11	7.5	9	£2.77
TCNS34	3/4" BSP	30	34	11	9	11	£2.80
TCNS1	1" BSP	35	42	12	10.5		£4.13
TCNS114	1 1/4" BSP	42	51	13.5	12		£6.05
TCNS112	1 1/2" BSP	50	58	16	10		£7.83
TCNS2	2" BSP	64	74	16	12		£11.86
TSN							
TSN14	1/4" BSP	17	19.5	9	7	5	£1.92
TSN38	3/8" BSP	18	22	10	7.5	8	£2.18
TSN12	1/2" BSP	24	28	11	7.5	9	£2.60
TSN34	3/4" BSP	30	34	11	9	11	£3.55
TSN1	1" BSP	35	42	12	10.5		£4.92
TSN114	1 1/4" BSP	42	51	13.5	12		£4.92
TSN112	1 1/2" BSP	50	58	16	10		£7.33
TSN2	2" BSP	64	74	16	12		£8.29

TCZ
KNURLED OIL FILL PLUG
TCZS
KNURLED OIL FILL PLUG WITH BREATHER HOLE

- Threaded plug with knurled head in Thermoplastic material (Polymide 66) ensuring high mechanical resistance at both low and high temperature (max. 100/110°C). Excellent dimensional stability and shock resistant.
- 'O' ring seal or 70 shore rubber seal.
- Available in standard black colour, red on request.
- Style TCZ and TCZS have molded UNI fill symbol and the text "OIL" molded on top.
- Style TSZ has the UNI drain symbol molded on top.
- The style TZCS incorporates a breather hole, located on the knurled rim with a diameter of 2-3mm.

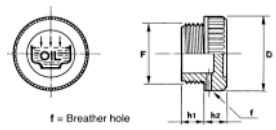

Type	F	D	h1	h2	Price
TCZ					
TCZ14	1/4" BSP	20	9	9	£1.98
TCZ38	3/8" BSP	20.5	10	9	£2.18
TCZ12	1/2" BSP	28	10.5	10.5	£2.60
TCZ34	3/4" BSP	31	11	12	£3.55
TCZ1	1" BSP	39	12	12	£4.92
TCZ114	1 1/4" BSP	49	13.5	13	£7.63
TCZ112	1 1/2" BSP	55	14.5	14.7	£8.87
TCZ2	2" BSP	68.5	16	15	£13.75
TCZS					
TCZS14	1/4" BSP	20	9	9	£2.77
TCZS38	3/8" BSP	20.5	10	9	£2.38
TCZS12	1/2" BSP	28	10.5	10.5	£2.72
TCZS34	3/4" BSP	31	11	12	£3.87
TCZS1	1" BSP	39	12	12	£5.11
TCZS114	1 1/4" BSP	49	13.5	13	£7.60
TCZS112	1 1/2" BSP	55	14.5	14.7	£9.56
TCZS2	2" BSP	68.5	16	15	£14.06

FLOWFIT

TMA

ALUMINIUM DRAIN PLUG WITH MAGNET

- HEX PLUG MANUFACTURED FROM ALUMINIUM 11S COMPLETE WITH ASBESTOS FREE FLAT SEAL
- FITTED WITH PRESSED-IN CYLINDRICAL MAGNET
- FITTED TO BASE OF TANKS TO REMOVE FERROUS PARTICLES
- TEXT — MAGNETIC

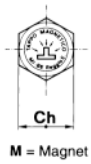

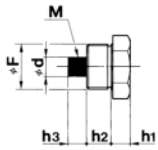

Type	F	Ch	d	h1	h2	Price
TMA14	1/4"BSP	18	8	7	10	£8.62
TMA38	3/8"BSP	22	10	7	10	£12.48
TMA12	1/2"BSP	27	10	8	10	£13.10
TMA34	3/4"BSP	34	13	8	10	£21.95
TMA1	1"BSP	40	13	8	14	£29.78

TCSA

OIL FILL PLUG WITH BREATHER AND VANE

TCSF

OIL FILL PLUG WITH BREATHER, VANE AND FILTER

- Hex head oil fill plug made from Thermoplastic material (Polymide 66), ensuring high mechanical resistance at both low and higher temperatures. (max. 100/110°C).
- This product offers excellent dimensional stability and is shock resistant.
- Asbestos free flat oil resistant seal.
- The plugs are marked with the UNI fill symbol and the word OIL, the breather hole is located on the side of the hex, with a diameter of 2-3mm.
- The incorporated oil dampening vane will reduce spillage when strong oil movement in the container or reservoir takes place.
- The Polyurethane foam filter prevents contamination from the ambient atmosphere polluting the oil.

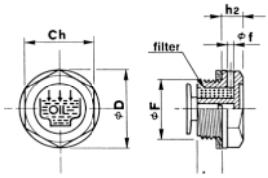

Type	F	Ch	D	h1	h2	Nm	Price
TCSA							
TCSA14	1/4" BSP	17	19.5	9	7	5	£2.31
TCSA38	3/8" BSP	18	22	10	7.5	8	£2.64
TCSA12	1/2" BSP	24	28	11	7.5	9	£2.84
TCSA34	3/4" BSP	30	34	11	9	11	£3.91
TCSA1	1" BSP	35	42	12	10.5		£5.26
TCSA114	1 1/4" BSP	42	51	13.5	12		£7.12
TCSF							
TCSF38	3/8" BSP	18	22	10	7.5	8	£4.27
TCSF12	1/2" BSP	24	28	11	7.5	9	£4.57
TCSF34	3/4" BSP	30	34	11	9	11	£6.32
TCSF1	1" BSP	35	42	12	10.5		£7.79
TCSF114	1 1/4" BSP	42	51	13.5	12		£7.12

TM

DRAIN PLUG WITH MAGNET

- Thermoplastic hex plug with magnet.
- The plug is mounted on the bottom of the transmission or tank, to be used as drain plug. The magnetic disk will attract ferrous metal parts and contains them, preventing damage to gears and other moving components.
- This plug is manufactured in the colour black, with a hot painted description MAGNETIC in a bright colour.
- Oil resistant asbestos free seal.
- In larger quantities, these plugs are available with other than the shown threads, ie: M16 18 20 22.

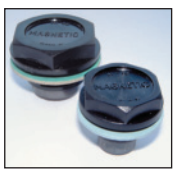

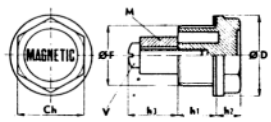

Type	F	Ch	D	h1	h2	h3	Price
TM14	1/4"	17	20	9	7	5	£6.68
TM38	3/8"	18	22	10	7.5	10	£8.62
TM12	1/2"	24	27	11	8	9	£9.96
TM34	3/4"	30	34	11	9	6.5	£13.37
TM1	1"	35	42	12	10.5	14	£17.31

KMF

METAL FILLER PLUG WITH FILTER

- SINTERED METAL FILTER 50/60 MICRON
- FIBRE ASBESTOS - FREE SEAL
- FOUR BREATHER HOLES ARE LOCATED UNDER THE HEX HEAD PROVIDING AN ADEQUATE BREATHING CAPACITY
- IDEAL FOR GEARBOXES AND TRANSMISSION APPLICATIONS

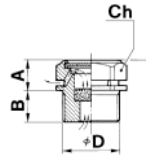

Type	ØD	Ch	A	B	Price
KMF14	1/4"BSP	18	13	9	£10.53
KMF38	3/8"BSP	22	14	10	£12.96
KMF12	1/2"BSP	27	14	10	£14.27

TCAS

HEX PLUG WITH DIPSTICK AND BREATHER HOLE

- Hex threaded plug with dipstick (diam. 4.5mm steel), material plug: (Polymide 66) maximum temperature 100/110°C.
- Oil resistant seal. ('O' ring, 70 shore)
- The model TCAS has a breather hole located in the side of the knurled head, with a diameter of 2-2.5mm.
- The standard dipstick is delivered in a 200mm length, on larger quantities they can be manufactured to the customers specific length, and MIN-MAX notches can be placed in the desired position.

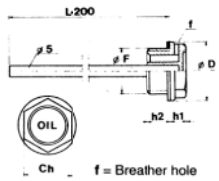

Type	F	Ch	D	h1	h2	Price
TCAS						
TCAS14	1/4" BSP	17	19	7	9	£4.10
TCAS38	3/8" BSP	18	22	7.5	10	£4.35
TCAS12	1/2" BSP	24	28	7.5	11	£4.62
TCAS34	3/4" BSP	30	34	9	11	£5.69
TCAS1	1" BSP	35	42	10.5	12	£6.85
TCAS114	1 1/4" BSP	42	51	12	13.5	£9.00
TCAS2	2" BSP	64	74	13.5	16	£14.54

TMD

FILLER BREATHER WITH DOUBLE BREATHER HOLE

TMDF

FILLER BREATHER WITH DOUBLE BREATHER HOLE AND FILTER

- Round headed Filler Breather, with vertical ribs for better grip. Oil resistant seal. ('O' ring, 70 shore)
- The Filler Breather is produced from Polymide 66, ensuring high mechanical resistance at both low and higher temperatures. (maximum temperature 100/110°C)
- This product offers excellent dimensional stability and is shock resistant.
- These Filler Breathers allow air passage at high volume, through the vents located on the bottom of the head. They are recommended to be used in systems where a large amount of oil level changes take place in a short amount of time, allowing the air to enter and leave the system without any unwanted air pressure increase or decrease.
- Style TMDF has a standard Polyurethane foam filter (60 Micron) built in. This filter is located under the red lid, easy to remove, clean and reinstall.

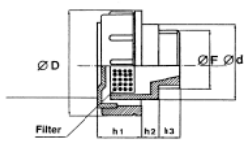

Type	F	D	d	h1	h2	h3	Price
TMD							
TMD38	3/8"	36	23	17	5	11	£5.97
TMD12	1/2"	41	28	18	5	12	£6.75
TMD34	3/4"	47	33	17	5	12	£7.93
TMD1	1"	52	38	20	5	12	£9.78
TMD114	1 1/4"	63	49	23	5	13	£12.66
TMD112	1 1/2	63	55	23	5	13.5	£13.37
TMDF							
TMDF38	3/8" BSP	36	23	17	5	11	£8.84
TMDF12	1/2" BSP	41	28	18	5	12	£10.03
TMDF34	3/4" BSP	47	33	17	5	12	£11.20
TMDF1	1" BSP	52	38	20	5	12	£13.84
TMDF114	1 1/4" BSP	63	49	23	5	13	£17.47
TMDF112	1 1/2" BSP	63	55	23	5	13.5	£18.43

TMDA

FILLER BREATHER WITH LARGE BREATHER HOLE AND DIPSTICK

TMDFA

FILLER BREATHER WITH LARGE BREATHER HOLE, DIPSTICK AND FILTER

- The below Filler Breathers have the same characteristics as the models TMD - TMDF, but are equipped with a dipstick.
- The standard dipstick is 200mm in length.

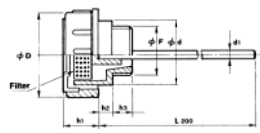

Type	F	D	d	h1	h2	h3	Price
TMDA							
TMDA38	3/8" BSP	36	23	17	5	11	£8.38
TMDA12	1/2" BSP	41	28	18	5	12	£9.18
TMDA34	3/4" BSP	47	33	17	5	12	£11.42
TMDA1	1" BSP	52	38	20	5	12	£12.32
TMDA114	1 1/4" BSP	63	49	23	5	13	£16.04
TMDA112	1 1/2 BSP	63	55	23	5	13.5	£16.13
TMDFA							
TMDFA38	3/8" BSP	36	23	17	5	11	£11.89
TMDFA12	1/2" BSP	41	28	18	5	12	£13.10
TMDFA34	3/4" BSP	47	33	17	5	12	£15.32
TMDFA1	1" BSP	52	38	20	5	12	£16.04
TMDFA114	1 1/4" BSP	63	49	23	5	13	£20.50
TMDFA112	1 1/2" BSP	63	55	23	5	13.5	£22.08

TSF

NEW VENT PLUG TO REDUCE OIL OIL DAMP ESCAPE

- Filler Breather with easy grip vertical ribs, manufactured from Thermoplastic material (Polymide 66). Maximum working temperature 100°C.
- These style Filler Breathers are produced in black with a red lid, with the text "OIL". On large orders a custom text or company logo is possible.
- A standard flat rubber seal is used , but a 'O' ring seal is available, both in NBR 70 shore.
- Located under the lid is a Polyurethane foam filter (50 Micron) installed, which is easy to be cleaned once the lid is removed.
- The series TSF has a specially designed cavity which prevents oil from escaping through the Breather holes when it is splashed in an upward direction, often occurring when there is a strong oil movement due to rotating gears.
- The inside of the TSF features a conical cavity which, due to its design entraps oil but allows air to escape and enter (within limitations).
- These Filler Breather plugs are utilised on hydraulic power packs, oil tanks, gear reduction boxes, gearboxes or any application where strong movement causes splashing oil in or around the Filler Breather.

Type	F	D	h1	h2	Price
TSF14	1/4" BSP	30	21	10	£5.83
TSF38	3/8" BSP*	30	21	10	£6.38
TSF12	1/2" BSP*	30	21	10	£6.85

*On request available in NPT

TPF

PRESS-FIT FILLER BREATHER WITH LARGE BREATHER HOLE AND FILTER

- Press-fit Filler Breather with easy grip vertical ribs.
- These Filler Breathers are not threaded, but fit snugly into a pre-drilled hole and seal by means of 'O' rings located on the stem. Hole tolerances: -0 + 0.1mm.
- These Filler Breathers are produced from Thermoplastic Polymide 66 which offers high mechanical resistance at both lower and higher temperatures (100°C max).
- Seals: 2 Oil resistant 'O' Rings, NBR 70 shore.
- The Filler Breather model TP/F has a large breathing capacity and is applied where a high volume of air change takes place, in example, hydraulic systems that utilise high ratio hydraulic cylinders. They are not recommended for usage on mobile equipment, where strong movement of the oil tank is present.

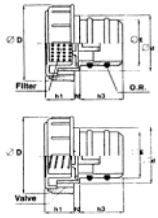

Type	F	D	d	h1	h2	h3	Price
TPF							
TPF18	18	36	23	17	5	10	£10.88
TPF20	20	36	24	17	4	19	£12.02
TPF26	26	41	28	17	4	21	£13.23
TPF30	30	47	33	17	4	21	£15.91

50% OFF ALL PRICES

mintor®

dal 1962

Accessories for Hydraulic Components

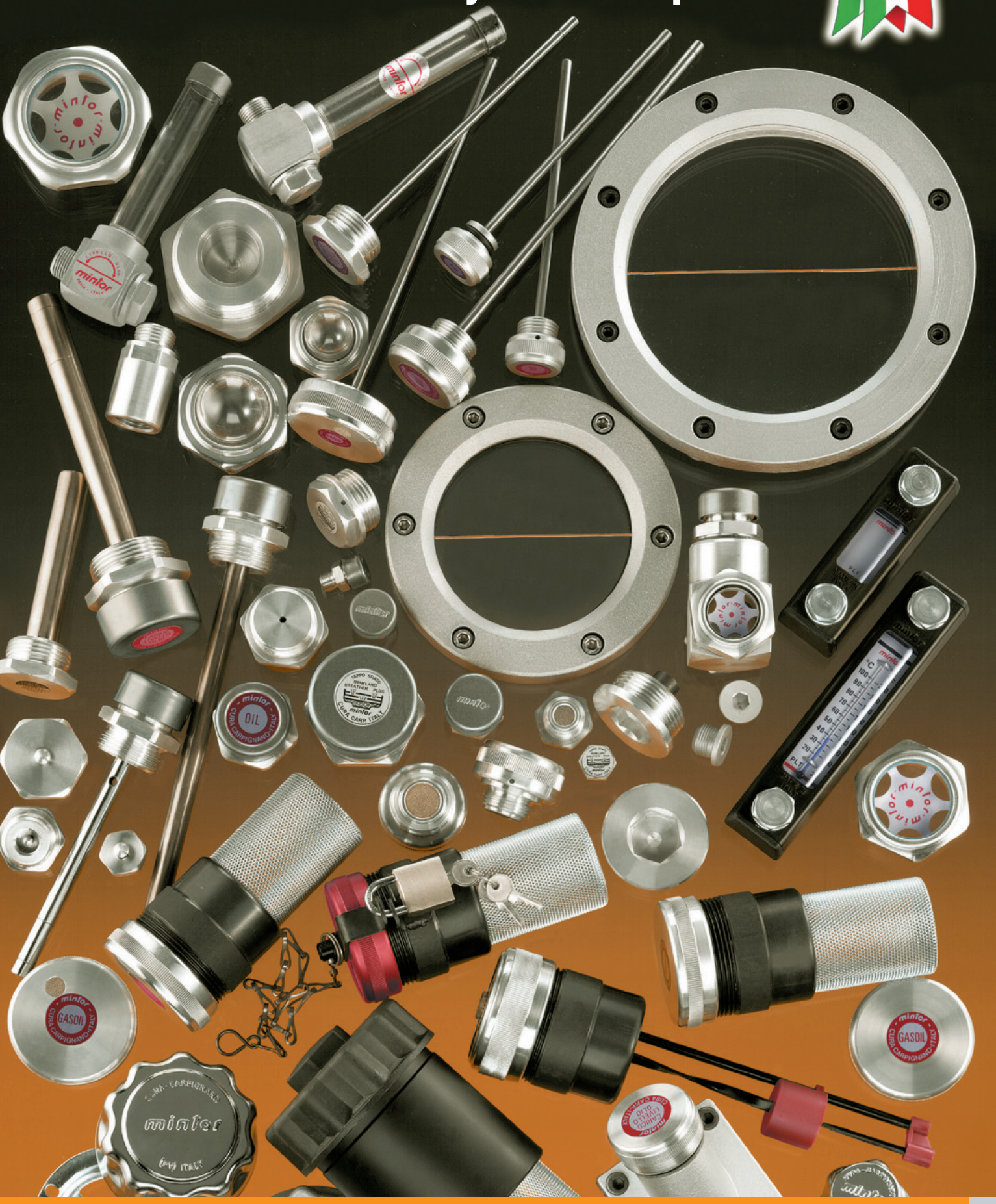

THE FOLLOWING IS A LIST OF SOME PARTICULAR COMPONENTS WITH THEIR TECHNICAL CHARACTERISTICS:

Magnetized parts

Permanently magnetized with special alloy The dipsticks and the magnetic elements are mechanically fastened

Light alloy in hardened and tempered bar from

breaking load .....40 ÷ 45
A 5% elongation .....13 ÷ 17
hardness Brinel Hd Kg/mmq .....100 ÷ 125
UNI EN standards.....EN 754 - 3 : 1998 EN 573 - 3 : 1996

Inspection window

1) Polycarbonate material
constant temperature during use up to .....+ 120°C
2) Pyrex glass
constant temperature during use up to .....+ 200°C

Washers

1) Oil-proof exempt asbestos .....70 SHORE
2) Viton ..... - 20°C + 100°C
3) O-rings in nitrile rubber, mineral oil proof
temperature during use from .....70 SHORE
4) O-rings in Viton
temperature during use from..... - 20°C + 200°C

The articles can be supplied with anodic treatment, standard or for salt environment.

The Company, in an effort to improve the technological content of its products, reserves the right to change the quotas indicated in the technical tables, without prior notice.
All the quotas are expressed in mm.

INDEX

BREATHER PLUGS

TCF/Z Page 548 — Filling plug with breather.

TCF Page 548 — Filling plug with breather.

TCF/F Page 549 — Filling plug with breather and milled head.

TCFS Page 549 — Filling plug and breather.

TCSF/Z Page 550 — Filling plug and breather.

TMV Page 550 — Breather plug.

TSVV Page 551 — Breather plug with double valve.

TSFO/R Page 551 — Breather plug.

TSF Page 552 — Oil filling plug and breather.

TSFA Page 552 — Oil filling plug and breather.

TSFT/N Page 553 — Oil filling plug and breather.

TSS Page 553 — Breather plug with valve.

PRS/F Page 554 — Extension for oil with breather.

MAGNETIC PLUGS

TCEM Page 554 — Magnetic oil - drain plug with hex slot..

TSCM Page 555 — Magnetic drain plug.

TSCM/F Page 555 — Magnetic drain plug with milled head.

FMC Page 556 — Magnetic filter rod.

FMC/LS Page 556 — Magnetic filter with dipstick and breather.

MAGNETIC PLUGS

TC/Z Page 557 — Filling plug.

TCE Page 557 — Drain filling plug with hex slot.

TC Page 558 — Filling plug.

TSC Page 558 — Drain plug.

TC/F Page 559 — Filling plug.

TSC/F Page 559 — Drain plug.

VISUAL LEVEL INDICATORS

TLP Page 560 — Visual level indicator non-threaded.

TLA Page 560 — Visual level indicator.

TLA/F Page 561 — Visual level indicator with milled head.

OBLÒ Ø 100 Page 562 — Inspection porthole or liquid level.

OBLÒ Ø 148 Page 562 — Inspection porthole or liquid level.

IFC Page 563 — Dome-shaped level gauge.

GTSF Page 563 — Level indicator unit with breather plug.

TLAX Page 561 — Visual level indicator with glass.

LEVEL INDICATORS WITH DIPSTICK

TCLA Page 564 — Filling plug with dipstick.

TCLA/Z Page 564 — Filling plug with dipstick.

TCLS/Z Page 565 — Filling plug with dipstick and breather.

TCLS Page 565 — Filling plug with dipstick and breather hole.

ILA Page 566 — Level indicator.

ILAF Page 566 — Level indicator with breather.

ILAS Page 567 — Level indicator with breather.

Level indicators with dipstick cont.

LSF
Page 567
Level indicator with breather.

VISUAL LEVEL INDICATORS WITH FLOAT SYSTEM

TRBF/LG
Page 568
Visual level indicator with float system.

TC/ZLG
Page 568
Visual level indicator with float system.

LGF68
Page 569
Flanged level indicator with float system.

VERTICAL VISUAL LEVEL INDICATORS

GLVS
Page 569
Vertical level indicator with single thread.

GLV
Page 570
Vertical level indicator with double thread.

GLVE
Page 571
Vertical level indicator with double electrical contact.

GLVX
Page 570
Vertical level indicator with double thread, with pyrex glass and protection.

PL
Page 571
Vertical level indicator.

PLT
Page 572
Vertical level indicator with thermometer.

PLE
Page 572
Vertical level indicator with electrical contact.

FILLING PLUGS

TFES
Page 573
Female threaded plug with breather.

TFE/Z
Page 573
Female threaded plug.

TFES/Z
Page 574
Female threaded plug with breather.

TFES/ZA
Page 574
Female threaded plug with breather and dipstick.

TFES/ZF
Page 575
Female threaded plug with breather.

TCAR
Page 575
Filling plug.

TCARF
Page 577
Filling plug with threaded mount.

TCAR/LC
Page 576
Filling plug with lock-holder.

TCARS
Page 576
Filling plug with flange to be welded.

TRBF
Page 577
Hermetic filling plug.

TRBFS
Page 578
Filling plug with breather.

TRBFSC
Page 578
Filling plug with breather and lock-holder.

TRBF/ZK
Page 579
Hermetic filling plug with key lock.

TRBFS/A
Page 579

Filling plug with breather.

TRTCSF/Z
Page 580

Breather and filling plug.

PLUGS ON INCLINED FLANGE

INCLINED FLANGE

FLGV
Page 580

Inclined flange for side applications.

BREATHER PLUGS ON INCLINED FLANGE

TCFI - TSFI
TCF/FI - TCF/ZI
TCSF/ZI
Page 581

Filling plug with breather for side applications.

FILLING PLUGS ON INCLINED FLANGE

TCI -TC/ZI
TC/FI
Page 581

Filling plug for side applications.

FILLING AND BREATHER PLUGS WITH LEVEL DIPSTICK ON INCLINED FLANGE

TCLAI - TCLA/ZI
TCLSI - TCLS/ZI
ILAFI - LSFI
FMC/LSI
Page 582

Filling plug with dipstick and breather for side applications.

FILLING PLUG ON INCLINED FLANGE

TCARI
Page 582

Inclined filling plug.

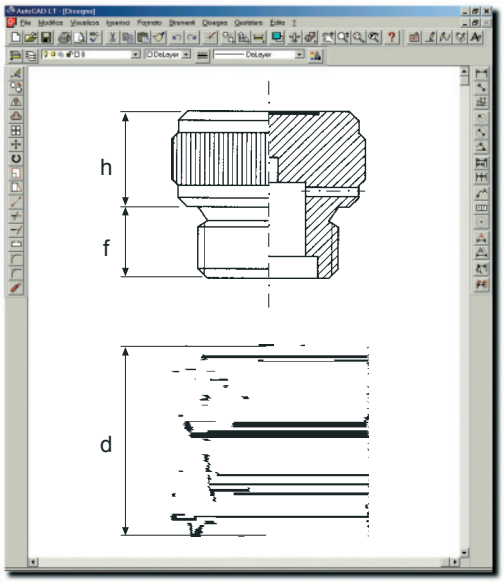

TCF/Z

Filling plug with breather

- Threaded plug with knurled round head for hand-tightening.
- Hole for venting internal pressure.
- For application only on upper part of the crankcase away from moving parts.
- For applications requiring extra-tight sealing, type TSFT/N is recommended.

TYPE	CODE	GAS	h	f	d	PRICE
TCF/Z0G	1GCFZ00A	1/8"	12	8	20	£3.33
TCF/Z1G	1GCFZ10A	1/4"	12	8	22	£3.85
TCF/Z2G	1GCFZ20A	3/8"	13,5	10	26	£4.45
TCF/Z3G	1GCFZ30A	1/2"	16,5	10	30	£5.02
TCF/Z4G	1GCFZ40A	3/4"	20	12	40	£8.48
TCF/Z5G	1GCFZ50A	1"	21,5	14	45	£12.31
TCF/Z6G	1GCFZ60A	1"1/4	20	15	55	£18.61
TCF/Z7G	1GCFZ70A	1"1/2	20	15	55	£22.26
TCF/Z8G	1GCFZ80A	2"	20	17	70	£41.12

TYPE	CODE	MB series	h	f	d	PRICE
TCF/Z0M	1MCFZ00A	10 x 1	12	8	20	£3.33
TCF/Z1M	1MCFZ10A	14 x 1,5	12	8	22	£3.85
TCF/Z2M	1MCFZ20A	16 x 1,5	12	10	26	£4.45
TCF/Z3M	1MCFZ30A	18 x 1,5	12	10	26	£4.97
TCF/Z4M	1MCFZ40A	20 x 1,5	15	10	30	£4.99
TCF/Z5M	1MCFZ50A	22 x 1,5	15	10	30	£5.02
TCF/Z6M	1MCFZ60A	24 x 2	15	12	36	£8.81
TCF/Z7M	1MCFZ70A	30 x 2	20	12	42	£11.38
TCF/Z8M	1MCFZ80A	33 x 2	21,5	14	45	£12.31

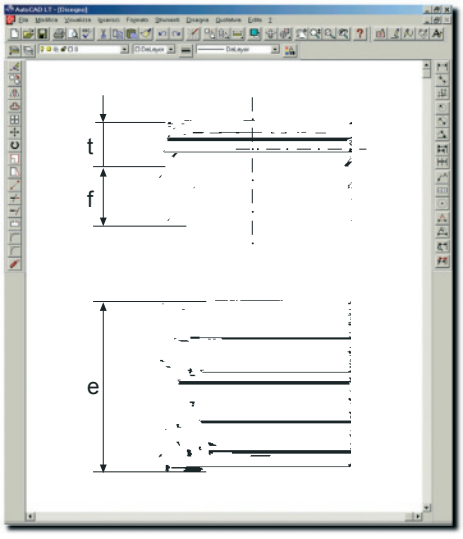

TCF

Filling plug with breather

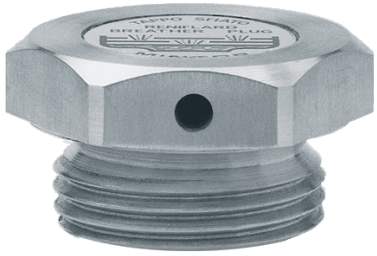

- Hole for venting internal pressure.
- For application only on upper part of the crankcase away from moving parts.
- For applications requiring extra-tight sealing, type TSFT/N is recommended.

TYPE	CODE	GAS	t	f	e	PRICE
TCF0G	1GTCF00A	1/8"	5	8	14	£2.86
TCF1G	1GTCF10A	1/4"	7,5	8	17	£3.13
TCF2G	1GTCF20A	3/8"	8,5	10	22	£3.25
TCF3G	1GTCF30A	1/2"	8,5	10	27	£4.35
TCF4G	1GTCF40A	3/4"	9,5	12	32	£6.17
TCF5G	1GTCF50A	1"	9,5	14	40	£10.02
TCF6G	1GTCF60A	1"1/4	10	15	50	£16.54
TCF7G	1GTCF70A	1"1/2	10	15	55	£19.92
TCF8G	1GTCF80A	2"	12	17	70	£39.83

TYPE	CODE	MB series	t	f	e	PRICE
TCF0M	1MTCF00A	10 x 1	5	8	14	£2.86
TCF1M	1MTCF10A	14 x 1,5	6	8	17	£3.13
TCF2M	1MTCF20A	16 x 1,5	7	10	22	£3.25
TCF3M	1MTCF30A	18 x 1,5	7	10	22	£3.94
TCF4M	1MTCF40A	20 x 1,5	7	10	24	£4.48
TCF5M	1MTCF50A	22 x 1,5	8,5	10	27	£4.35
TCF6M	1MTCF60A	24 x 2	8	12	30	£7.18
TCF7M	1MTCF70A	26 x 1,5	8	12	32	£8.15
TCF8M	1MTCF80A	30 x 2	8	12	36	£10.35
TCF9M	1MTCF90A	33 x 2	8	14	40	£11.13
TCF10M	1MTCF91A	42 x 3	10	15	50	£16.54
TCF11M	1MTCF92A	48 x 3	10	15	55	£19.92
TCF12M	1MTCF93A	60 x 4	12	17	70	£39.83

50% OFF ALL PRICES

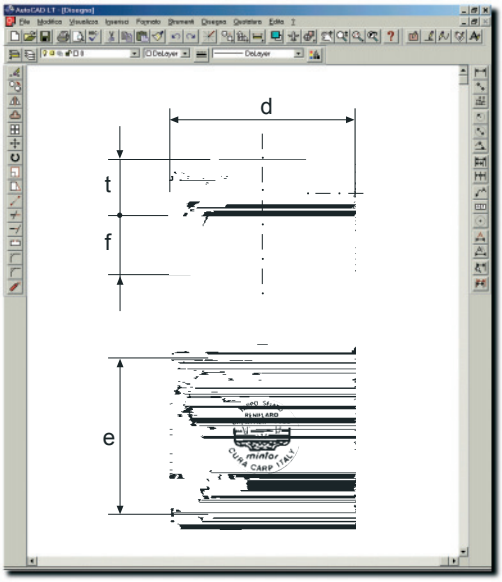

TCF/F

Filling plug with breather and milled head

- Hole for venting internal pressure.
- The milled head produces a crown with greater adherence area to the crankcase.
- For application only on upper part of the crankcase away from moving parts.
- For applications requiring extra-tight sealing, type TSFT/N is recommended.

TYPE	CODE	GAS	d	t	f	e	PRICE
TCF/F0G	1GF/F00A	1/8"	14	7	8	10	£2.63
TCF/F1G	1GF/F10A	1/4"	20	9,5	8	17	£3.15
TCF/F2G	1GF/F20A	3/8"	22	10	9	18	£3.23
TCF/F3G	1GF/F30A	1/2"	28	10,5	11	22	£4.23
TCF/F4G	1GF/F40A	3/4"	32	10,5	12	27	£2.57
TCF/F5G	1GF/F50A	1"	40	12	12,5	34	£9.54

TYPE	CODE	MB series	d	t	f	e	PRICE
TCF/F0M	1MF/F00A	10 x 1	14	7	8	10	£2.63
TCF/F1M	1MF/F10A	14 x 1,5	20	8	8	17	£3.15
TCF/F2M	1MF/F20A	16 x 1,5	22	10	9	18	£3.23
TCF/F3M	1MF/F30A	18 x 1,5	26	8	9	20	£3.56
TCF/F4M	1MF/F40A	20 x 1,5	28	9	11	22	£4.02
TCF/F5M	1MF/F50A	22 x 1,5	28	10,5	11	22	£4.23

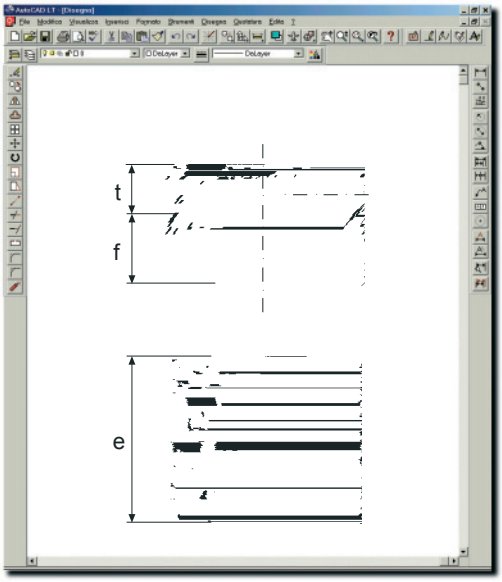

TCFS

Filling plug and breather

- Threaded plug with hex head and with hole and a spherical bronze filter which vent internal pressure and keep out foreign bodies during the intake stroke.
- The built-in filter has a filtration degree of 40 microns.
- The TCFS is especially suitable in dusty environments and with very small encumbrance.

TYPE	CODE	GAS	t	f	e	μ	PRICE
TCFS1G	1GCFS10A	1/4"	7,5	8	17	40	£4.61
TCFS2G	1GCFS20A	3/8"	8,5	9	22	40	£5.29
TCFS3G	1GCFS30A	1/2"	7	12	27	40	£7.63
TCFS4G	1GCFS40A	3/4"	8	14	32	40	£9.87
TCFS5G	1GCFS50A	1"	8	16	40	40	£14.00

TYPE	CODE	MB series	t	f	e	μ	PRICE
TCFS1M	1MCFS10A	14 x 1,5	6	8	17	40	£4.61
TCFS2M	1MCFS20A	16 x 1,5	7	9	22	40	£5.32
TCFS3M	1MCFS30A	18 x 1,5	7	9	22	40	£6.28
TCFS4M	1MCFS40A	20 x 1,5	7	12	24	40	£7.59
TCFS5M	1MCFS50A	22 x 1,5	7	12	27	40	£7.63

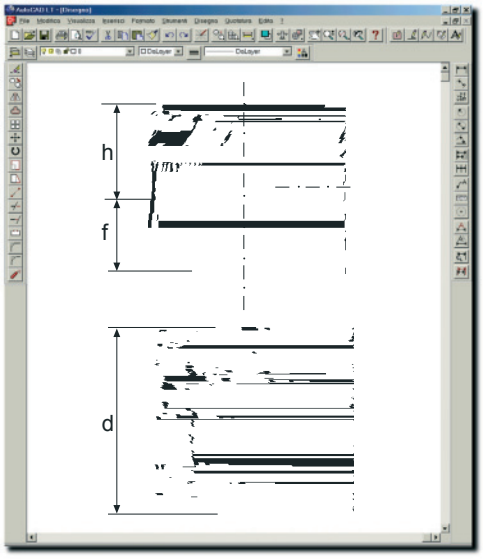

TCSF/Z

Filling plug and breather

- Threaded plug with knurled round head for hand-tightening.
- The hole and a spherical bronze filter vent internal pressure and keep out foreign bodies during the intake stroke.
- The built-in filter has a filtration degree of 40 microns.
- The TCSF/Z is therefore especially suitable in dusty environments and is recommended for applications on **Hydraulic Units**.

TYPE	CODE	GAS	h	f	d	µ	PRICE
TCSF/Z1G	1GSFZ10A	1/4"	12	8	22	40	£6.20
TCSF/Z2G	1GSFZ20A	3/8"	12	10	26	40	£7.10
TCSF/Z3G	1GSFZ30A	1/2"	16,5	12	30	40	£8.41
TCSF/Z4G	1GSFZ40A	3/4"	20	13,5	40	40	£12.31
TCSF/Z5G	1GSFZ50A	1"	21,5	14	45	40	£16.32
TCSF/Z6G	1GSFZ60A	1" 1/4	21,5	16	55	200	£22.93
TCSF/Z7G	1GSFZ70A	1" 1/2	21,5	16	55	200	£26.56
TCSF/Z8G	1GSFZ80A	2"	20	17	70	200	£40.97

TYPE	CODE	MB series	h	f	d	µ	PRICE
TCSF/Z1M	1MSFZ10A	14 x 1,5	12	8	22	40	£6.20
TCSF/Z2M	1MSFZ20A	16 x 1,5	12	10	26	40	£7.10
TCSF/Z3M	1MSFZ30A	18 x 1,5	12	10	26	40	£7.76
TCSF/Z4M	1MSFZ40A	20 x 1,5	15	12	30	40	£8.84
TCSF/Z5M	1MSFZ50A	22 x 1,5	15	12	30	40	£8.89
TCSF/Z6M	1MSFZ60A	24 x 2	15	13,5	36	40	£11.28
TCSF/Z7M	1MSFZ70A	30 x 2	20	14	42	40	£14.41
TCSF/Z8M	1MSFZ80A	33 x 2	20	14	45	40	£16.32

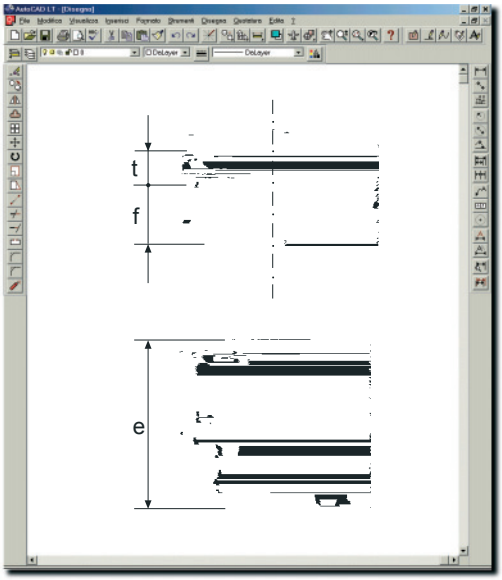

TMV

Breather plug

- Breather plug with O-ring and external valve with an inox spring calibrated from 0,10 to 0,15 bar.
- It opens at intervals and vents internal pressure.
- The valve has the double function of keeping out foreign bodies and avoid fluid leakage.
- It is especially recommended for **Differentials, Transmissions and small Speed Reducers**.

TYPE	CODE	GAS	t	f	e	PRICE
TMV0G	1GTMV00A	1/8"	5	8	14	£4.39
TMV1G	1GTMV10A	1/4"	6	8	17	£4.69
TMV2G	1GTMV20A	3/8"	7	10	22	£5.61
TMV3G	1GTMV30A	1/2"	7	10	27	£6.85
TMV4G	1GTMV40A	3/4"	8	12	32	£10.28
TMV5G	1GTMV50A	1"	8	14	40	£13.12

TYPE	CODE	MB series	t	f	e	PRICE
TMV0M	1MTMV00A	10 x 1	5	8	14	£4.39
TMV1M	1MTMV10A	12 x 1,5	6	8	17	£4.39
TMV2M	1MTMV20A	14 x 1,5	6	8	17	£4.69
TMV3M	1MTMV30A	16 x 1,5	7	10	22	£5.61
TMV4M	1MTMV40A	18 x 1,5	7	10	22	£6.41
TMV5M	1MTMV50A	20 x 1,5	7	10	24	£7.24
TMV6M	1MTMV60A	22 x 1,5	7	10	27	£6.85

50% OFF ALL PRICES

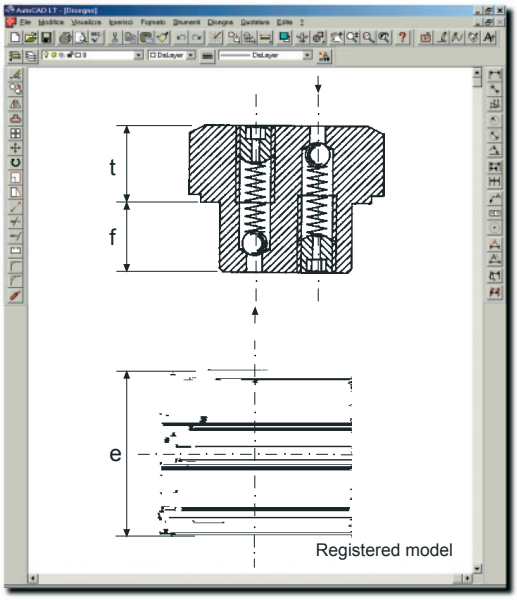

TSVV

Breather plug with double valve

- Breather plug with double valve made of hardened and tempered light alloy. It is provided with standard 0,10 bar calibration, which can be adjusted by the operator depending on the intended use.
- The double valve ensures venting of internal pressure and inlet of air when the flow medium level decreases thus hindering cavitation on delivery.
- Particularly suitable for **Tanks, Oil-hydraulic Circuits and Hydraulically Operated Lifting Machines**.

TYPE	CODE	GAS	t	f	e	PRICE
TSVV1G	1GSVV10A	1/4"	10	10	17	£10.02
TSVV2G	1GSVV20A	3/8"	10	10	22	£10.61
TSVV3G	1GSVV30A	1/2"	10	10	27	£12.89
TSVV4G	1GSVV40A	3/4"	8	12	32	£17.28
TSVV5G	1GSVV50A	1"	8	14	40	£26.04

TYPE	CODE	MB series	t	f	e	PRICE
TSVV0M	1MSVV00A	12 x 1,5	10	10	17	£10.02
TSVV1M	1MSVV10A	14 x 1,5	10	10	17	£10.02
TSVV2M	1MSVV20A	16 x 1,5	10	10	22	£10.61
TSVV3M	1MSVV30A	18 x 1,5	10	10	22	£11.71
TSVV4M	1MSVV40A	20 x 1,5	10	10	24	£12.48
TSVV5M	1MSVV50A	22 x 1,5	10	10	27	£12.89
TSVV6M	1MSVV60A	24 x 1,5	10	10	30	£19.28
TSVV7M	1MSVV70A	26 x 1,5	8	12	32	£22.34
TSVV8M	1MSVV80A	30 x 2	8	12	36	£24.85
TSVV9M	1MSVV90A	33 x 2	8	14	40	£26.04

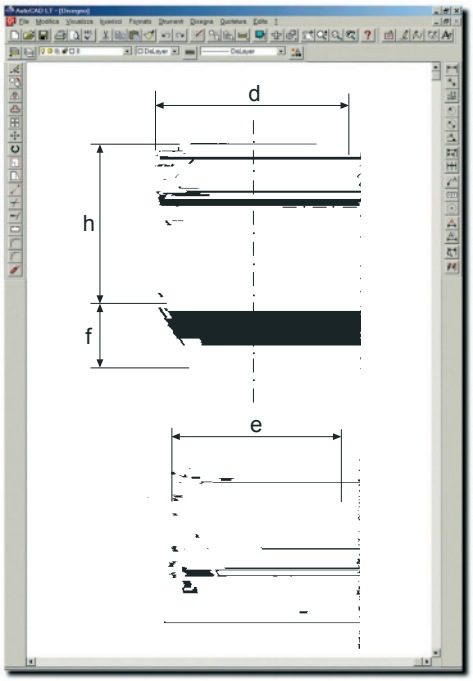

TSFO/R

Breather plug

- Oil filling and breather plug with galvanized-steel cover.
- Large internal chamber with O-ring especially designed for **Agricultural and Earth- moving Machines**, to be applied wherever there is strong sloshing of the fluids.

TYPE	CODE	GAS	d	h	f	e	PRICE
TSFO/R0G	1GTOR00M	1/8"	21	21	8	17	£4.39
TSFO/R1G	1GTOR10M	1/4"	21	21	8	17	£4.66
TSFO/R2G	1GTOR20M	3/8"	24	23	9	20	£4.95
TSFO/R3G	1GTOR30M	1/2"	30	26	10	27	£6.56
TSFO/R4G	1GTOR40M	3/4"	30	24	12	32	£9.13
TSFO/R5G	1GTOR50M	1"	38	29	14	40	£14.05

TYPE	CODE	MB series	d	h	f	e	PRICE
TSFO/R0M	1MTOR00M	10 x 1	21	21	8	17	£4.39
TSFO/R1M	1MTOR10M	14 x 1,5	21	21	8	17	£4.66
TSFO/R2M	1MTOR20M	16 x 1,5	24	23	9	20	£4.95
TSFO/R3M	1MTOR30M	18 x 1,5	30	26	10	27	£4.95
TSFO/R4M	1MTOR40M	20 x 1,5	30	26	10	27	£6.41
TSFO/R5M	1MTOR50M	22 x 1,5	30	26	10	27	£6.56

TSF

Oil filling plug with breather

- A galvanized-steel cover and a spherical bronze filter vent internal pressure and keep out foreign bodies during the intake stroke.
- The built-in filter has a filtration degree of 40 microns.
- The TSF is therefore especially suitable in dusty environments and is recommended for applications on **Hydraulic Units and Cylinders**.

TYPE	CODE	GAS	d	h	f	e	µ	PRICE
TSF1G	1GTSF10M	1/4"	16,5	17	8	17	40	£6.50
TSF2G	1GTSF20M	3/8"	22	19	10	22	40	£7.92
TSF3G	1GTSF30M	1/2"	26	21	12	27	40	£9.56
TSF4G	1GTSF40M	3/4"	30	24	14	32	40	£13.18
TSF5G	1GTSF50M	1"	38	29	16	40	40	£18.74
TSF6G	1GTSF60A	1"1/4	50	33	16	50	200	£31.38
TSF7G	1GTSF70A	1"1/2	55	35	16	55	200	£42.75
TSF8G	1GTSF80A	2"	70	40	16	70	200	£79.33

TYPE	CODE	MB series	d	h	f	e	µ	PRICE
TSF1M	1MTSF10M	14 x 1,5	16,5	17	8	17	40	£6.50
TSF2M	1MTSF20M	16 x 1,5	22	19	10	22	40	£7.92
TSF3M	1MTSF30M	18 x 1,5	22	19	10	22	40	£8.84
TSF4M	1MTSF40M	20 x 1,5	24	21	12	24	40	£9.46
TSF5M	1MTSF50M	22x 1,5	26	21	12	27	40	£9.56
TSF6M	1MTSF60M	24 x 2	30	24	12	30	40	£16.86
TSF7M	1MTSF70M	30 x 2	30	25	14	36	40	£18.04
TSF8M	1MTSF80M	33 x 2	38	29	16	40	40	£18.74
TSF9M	1MTSF90A	42 x 3	50	33	16	50	200	£31.38
TSF10M	1MTSF91A	48 x 3	55	35	16	55	200	£42.75
TSF11M	1MTSF92A	60 x 4	70	40	16	70	200	£79.33

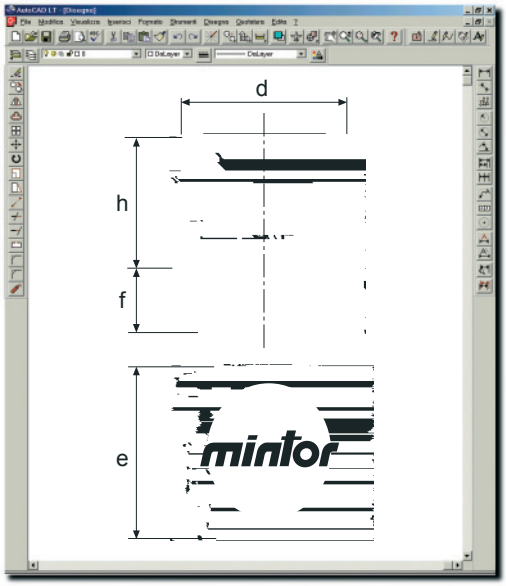

TSFA

Oil filling plug and breather

- A galvanized-steel cover and a spherical bronze filter vent internal pressure and keep out foreign bodies during the intake stroke.
- The built-in filter has a filtration degree of 40 microns.
- The TSFA is therefore especially suitable in dusty environments and is recommended for applications in the **motor field**.

TYPE	CODE	GAS	d	h	f	e	µ	PRICE
TSFA0G	1GTSFA0M	1/8"	16,5	16	8	14	40	£5.13
TSFA1G	1GTSFA1M	1/4"	16,5	17	8	17	40	£5.42
TSFA2G	1GTSFA2M	3/8"	22	19	11	22	40	£6.81
TSFA3G	1GTSFA3M	1/2"	26	20	11	27	40	£8.53
TSFA4G	1GTSFA4M	3/4"	30	24	12	32	40	£11.89
TSFA5G	1GTSFA5M	1"	38	29	14	40	40	£18.18

TYPE	CODE	MB series	d	h	f	e	µ	PRICE
TSFA0M	1MTSFA0M	10 x 1	16,5	16	8	14	40	£6.23
TSFA1M	1MTSFA1M	12 x 1,5	16,5	17	8	17	40	£6.28
TSFA2M	1MTSFA2M	14 x 1,5	16,5	17	8	17	40	£6.28
TSFA3M	1MTSFA3M	16 x 1,5	22	19	11	22	40	£6.82
TSFA4M	1MTSFA4M	18 x 1,5	22	19	11	22	40	£8.67
TSFA5M	1MTSFA5M	20 x 1,5	24	20	11	24	40	£8.89
TSFA6M	1MTSFA6M	22 x 1,5	26	20	11	27	40	£8.53
TSFA7M	1MTSFA7M	24 x 1,5	30	24	12	30	40	£15.20
TSFA8M	1MTSFA8M	26 x 1,5	30	24	12	32	40	£15.60
TSFA9M	1MTSFA9M	30 x 1,5	30	25	14	36	40	£17.17

50% OFF ALL PRICES

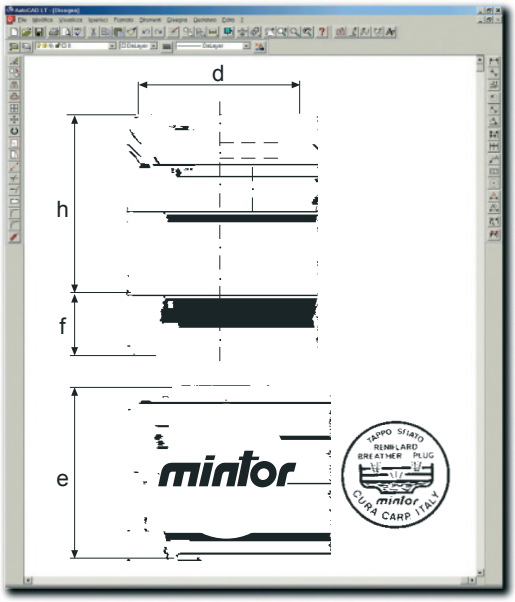

TSFT/N

Oil filling plug and breather

- Large chamber with labyrinth and perpendicular cut protected by a galvanized-steel cover.
- The pressure created by moving parts within the gearbox is vented through the labyrinth without oil spattering, even though the plug is mounted vertically to the parts.
- Particularly suitable for mounting on **Reduction Gears, Geared Motors, Speed Variators and Gearshift Boxes**.

TYPE	CODE	GAS	d	h	f	e	PRICE
TSFT/N1G	1GTSN10M	1/4"	16,5	23	8	17	£7.18
TSFT/N2G	1GTSN20M	3/8"	22	29	9	22	£8.59
TSFT/N3G	1GTSN30M	1/2"	26	29	10	27	£11.98
TSFT/N4G	1GTSN40M	3/4"	30	35	12	32	£14.98
TSFT/N5G	1GTSN50M	1"	38	43	14	40	£21.45
TSFT/N6G	1GTSN60A	1" 1/4	50	45	15	50	£39.49
TSFT/N7G	1GTSN70A	1" 1/2	55	46	15	55	£47.77
TSFT/N8G	1GTSN80A	2"	70	46	17	70	£91.52

TYPE	CODE	MB series	d	h	f	e	PRICE
TSFT/N1M	1MTSN10M	14 x 1,5	16,5	23	8	17	£7.20
TSFT/N2M	1MTSN20M	16 x 1,5	22	29	9	22	£8.59
TSFT/N3M	1MTSN30M	18 x 1,5	22	29	9	22	£10.50
TSFT/N4M	1MTSN40M	20 x 1,5	24	29	10	24	£11.59
TSFT/N5M	1MTSN50M	22 x 1,5	26	29	10	27	£11.98
TSFT/N6M	1MTSN60M	24x 2	30	35	12	30	£17.95
TSFT/N7M	1MTSN70M	30 x 2	30	42	12	36	£23.22
TSFT/N8M	1MTSN80M	33 x 2	38	43	14	40	£24.00
TSFT/N9M	1MTSN90A	42 x 3	50	45	15	50	£39.49
TSFT/N10M	1MTSN91A	48 x 3	55	46	15	55	£47.77
TSFT/N11M	1MTSN92A	60 x 4	70	46	17	70	£91.52

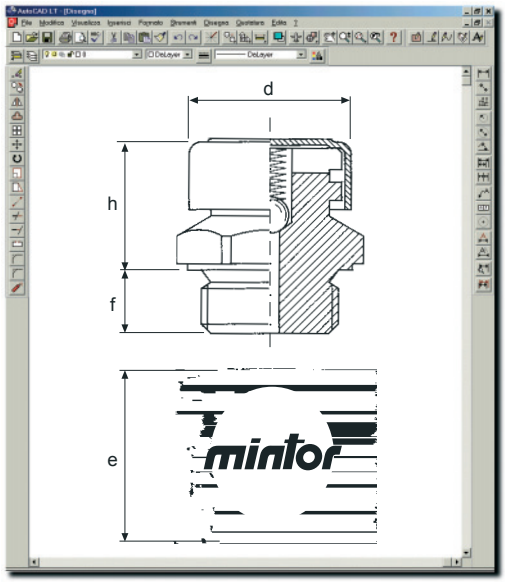

TSS

Breather plug with valve

- Breather plug with galvanized-steel cover and specially-designed internal valve with an inox spring, calibrated from 0,05 to 0,10 bar, which opens at intervals to vent internal pressure created by fluid turbulence and keep out foreign bodies.
- It is especially recommended for applications on **Speed-shift Gears, Agricultural over-Gears and Industrial Speed-Reduction Gearboxes**.

TYPE	CODE	GAS	d	h	f	e	PRICE
TSS0G	1GTSS00M	1/8"	16,5	16	8	14	£7.20
TSS1G	1GTSS10M	1/4"	16,5	17	9,5	17	£7.72
TSS2G	1GTSS20M	3/8"	22	19	11	22	£8.17
TSS3G	1GTSS30M	1/2"	26	20	11	27	£9.76
TSS4G	1GTSS40M	3/4"	30	24	12	32	£13.48
TSS5G	1GTSS50M	1"	38	29	14	40	£18.92

TYPE	CODE	MB series	d	h	f	e	PRICE
TSS0M	1MTSS00M	10 x 1	16,5	16	8	14	£7.20
TSS1M	1MTSS10M	14 x 1,5	16,5	17	9,5	17	£7.72
TSS2M	1MTSS20M	16 x 1,5	22	19	11	22	£8.17
TSS3M	1MTSS30M	18 x 1,5	22	19	11	22	£9.20
TSS4M	1MTSS40M	20 x 1,5	24	20	11	24	£9.69
TSS5M	1MTSS50M	22 x 1,5	26	20	11	27	£9.76
TSS6M	1MTSS60M	24 x 2	30	24	12	30	£12.04
TSS7M	1MTSS70M	30 x 2	30	25	14	36	£19.50
TSS8M	1MTSS80M	33 x 2	38	29	14	40	£18.92

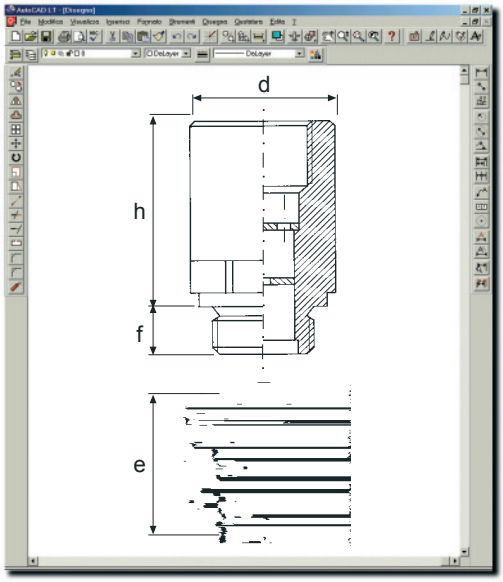

PRS/F

Extension for oil with breather

- Made of aluminium alloy, same thread for both internal and external side, with large chamber with labyrinth.
- Particularly suitable for **Agricultural, Earth Moving and Building Machines**.

TYPE	CODE	GAS	d	h	f	e	PRICE
PRS/F1G	1GPSF10A	1/4"	20	40	8	17	£7.50
PRS/F2G	1GPSF20A	3/8"	26	40	10	22	£9.13
PRS/F3G	1GPSF30A	1/2"	30	40	11	27	£11.61
PRS/F4G	1GPSF40A	3/4"	36	50	12	32	£14.69
PRS/F5G	1GPSF50A	1"	42	50	14	38	£23.22

TYPE	CODE	MB series	d	h	f	e	PRICE
PRS/F1M	1MPSF10A	14 x 1,5	20	40	8	17	£7.50
PRS/F2M	1MPSF20A	16 x 1,5	26	40	10	22	£9.13
PRS/F3M	1MPSF30A	18 x 1,5	26	40	10	22	£10.12
PRS/F4M	1MPSF40A	20 x 1,5	30	40	11	27	£11.19
PRS/F5M	1MPSF50A	22 x 1,5	30	40	11	27	£11.61

MAGNETIC PLUGS

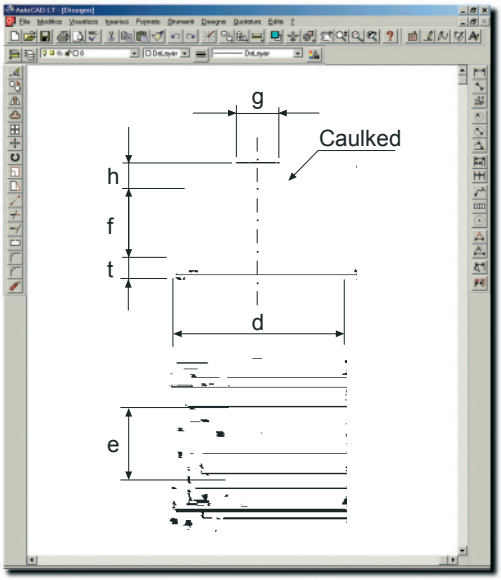

NORMA DIN 908 type

TCEM

Magnetic oil - drain plug with hex slot

- Made of tempered, hardened alloy.
- A permanent magnetic insert of special alloy attracts and holds ferrous particles suspended or circulating in the oil.
- Especially recommended for high-rpm machinery.
- Available with metal washers only.

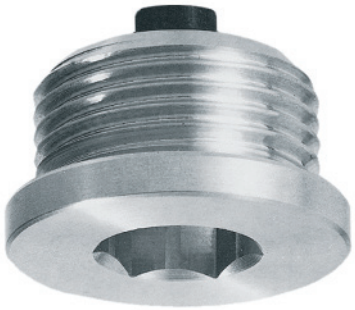

TYPE	CODE	GAS	e	g	h	f	t	d	PRICE
TCEM0G	1GTEM00A	1/8"	5	5	4	8	3	14	£5.07
TCEM1G	1GTEM10A	1/4"	6	5	5	12	3	18	£5.19
TCEM2G	1GTEM20A	3/8"	8	5	5	12	3	22	£5.43
TCEM3G	1GTEM30A	1/2"	10	6	5	14	4	26	£6.85
TCEM4G	1GTEM40A	3/4"	12	10	6	16	4	32	£12.37
TCEM5G	1GTEM50A	1"	17	10	6	16	5	40	£14.26
TCEM6G	1GTEM60A	1" 1/4	22	15	10	16	5	49	£27.87
TCEM7G	1GTEM70A	1" 1/2	24	15	10	16	5	55	£32.15
TCEM8G	1GTEM80A	2"	32	15	15	20	5	68	£58.38

TYPE	COD•	MB series	e	g	h	f	t	d	PRICE
TCEM0M	1MTEM00A	10 x 1	5	5	4	8	3	14	£5.07
TCEM1M	1MTEM10A	12 x 1,5	6	5	4	12	3	17	£5.17
TCEM2M	1MTEM20A	14 x 1,5	6	5	5	12	3	19	£5.19
TCEM3M	1MTEM30A	16 x 1,5	8	5	5	12	3	21	£5.43
TCEM4M	1MTEM40A	18 x 1,5	8	6	5	12	3	23	£6.17
TCEM5M	1MTEM50A	20 x 1,5	10	6	5	14	4	25	£6.58
TCEM6M	1MTEM60A	22 x 1,5	10	6	5	14	4	27	£6.85
TCEM7M	1MTEM70A	24 x 1,5	12	6	5	14	4	29	£10.54
TCEM8M	1MTEM80A	24 x 2	12	6	5	14	4	29	£10.54
TCEM9M	1MTEM90A	26 x 1,5	12	10	6	16	4	32	£13.26
TCEM10M	1MTEM91A	27x 2	12	10	6	16	4	32	£13.26
TCEM11M	1MTEM92A	30 x 1,5	17	10	6	16	4	36	£14.02
TCEM12M	1MTEM93A	30x 2	17	10	6	16	4	36	£14.02
TCEM13M	1MTEM94A	33x 2	17	10	6	16	5	40	£14.26

50% OFF ALL PRICES

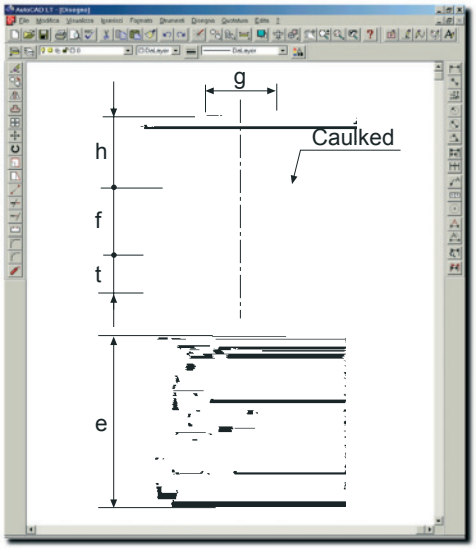

TSCM

Magnetic drain plug

- A magnetic insert attracts and holds ferrous particles suspended or circulating in the oil, safeguarding rotating parts.
- Recommended for high-rpm machinery.

TYPE	CODE	GAS	e	g	h	f	t	PRICE
TSCM0G	1GSCM00A	1/8"	14	5	6	8	5	£5.91
TSCM1G	1GSCM10A	1/4"	17	5	6	8	7,5	£6.36
TSCM2G	1GSCM20A	3/8"	22	6	6	10	8,5	£7.41
TSCM3G	1GSCM30A	1/2"	27	8	8	10	8,5	£10.50
TSCM4G	1GSCM40A	3/4"	32	10	10	12	9,5	£14.50
TSCM5G	1GSCM50A	1"	40	15	15	14	9,5	£20.61
TSCM6G	1GSCM60A	1" 1/4	50	15	15	15	10	£29.02
TSCM7G	1GSCM70A	1" 1/2	55	15	15	15	10	£32.15
TSCM8G	1GSCM80A	2"	70	15	15	17	12	£51.36

TYPE	CODE	MB series	e	g	h	f	t	PRICE
TSCM0M	1MSCM00A	10 x 1	14	5	6	8	5	£6.28
TSCM1M	1MSCM10A	12 x 1,5	17	5	6	8	6	£6.58
TSCM2M	1MSCM20A	14 x 1,5	17	5	6	8	6	£6.87
TSCM3M	1MSCM30A	16 x 1,5	22	6	6	10	8,5	£7.84
TSCM4M	1MSCM40A	18 x 1,5	22	6	6	10	8,5	£8.24
TSCM5M	1MSCM50A	20 x 1,5	24	8	8	10	7	£10.05
TSCM6M	1MSCM60A	22 x 1,5	27	8	8	10	8,5	£11.35
TSCM7M	1MSCM70A	24 x 2	30	10	10	12	8	£13.65
TSCM8M	1MSCM80A	30 x 2	36	10	10	12	8	£17.46
TSCM9M	1MSCM90A	33 x 2	40	15	15	14	8	£24.26
TSCM10M	1MSCM91A	42 x 3	50	15	15	15	10	£30.53
TSCM11M	1MSCM92A	48 x 3	55	15	15	15	10	£32.15
TSCM12M	1MSCM93A	60 x 4	70	15	15	17	12	£51.36

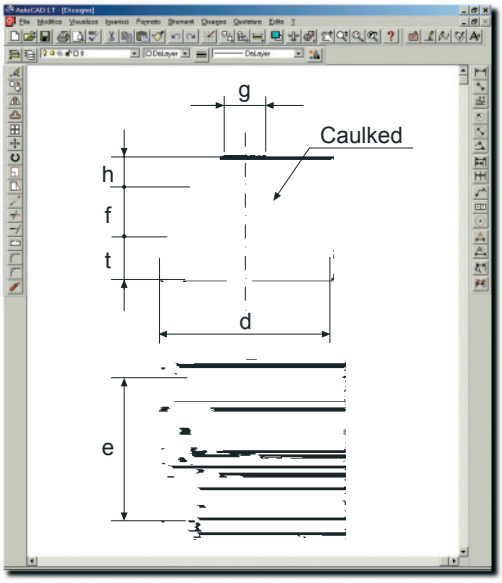

TSCM/F

Magnetic drain plug with milled head

- Head milling produces a crown with greater sealing area against the crankcase.
- A magnetic insert attracts and holds ferrous particles suspended or circulating in the oil, protecting all rotating parts.
- Recommended for high-rpm machinery.

TYPE	CODE	GAS	e	g	h	f	t	d	PRICE
TSCM/F0G	1GM/F00A	1/8"	10	5	4	8	8	14	£6.33
TSCM/F1G	1GM/F10A	1/4"	14	5	4	8	9,5	18	£6.97
TSCM/F2G	1GM/F20A	3/8"	18	5	5	9	10	22	£7.92
TSCM/F3G	1GM/F30A	1/2"	22	6	6	11	10,5	28	£11.28
TSCM/F4G	1GM/F40A	3/4"	27	10	6	12	12	32	£15.00
TSCM/F5G	1GM/F50A	1"	34	10	7	14	12	40	£21.00

TYPE	CODE	MB series	e	g	h	f	t	d	PRICE
TSCM/F0M	1MM/F00A	10 x 1	10	5	4	8	8	14	£6.33
TSCM/F1M	1MM/F10A	14 x 1,5	14	5	4	8	8	18	£6.97
TSCM/F2M	1MM/F20A	16 x 1,5	18	5	5	9	10	22	£7.92
TSCM/F3M	1MM/F30A	18 x 1,5	18	5	5	9	9	24	£8.67
TSCM/F4M	1MM/F40A	20 x 1,5	20	6	6	10	9	26	£9.58
TSCM/F5M	1MM/F50A	22 x 1,5	22	6	6	11	10,5	28	£11.28
TSCM/F6M	1MM/F60A	24 x 2	24	8	6	12	9	30	£13.79
TSCM/F7M	1MM/F70A	30 x 2	30	10	6	12	10,5	38	£17.37
TSCM/F8M	1MM/F80A	33 x 2	34	10	7	14	10,5	40	£21.00

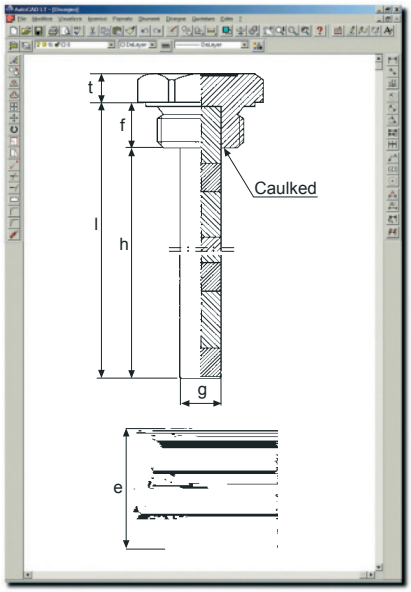

FMC

Magnetic filter rod

- Head of hardened, tempered light alloy.
- Permanent magnetic sections of special alloy with wide-radius action.
- Non-magnetic coating is smooth for easier, better cleaning.
- Recommended for **Grinding Machines, Hydraulic Units and Large tanks**.
- On request, supplied with different lenght.

TYPE	CODE	GAS	t	f	l	h	g	e	PRICE
FMC1G	1GFMC10A	3/8"	7	10	80	70	9	22	£32.92
FMC2G	1GFMC20A	1/2"	9,5	10	95	85	12	27	£40.18
FMC3G	1GFMC30A	3/4"	9,5	12	102	90	17	32	£52.80
FMC4G	1GFMC40A	1"	9,5	14	104	90	17	40	£66.49
FMC5G	1GFMC50A	1" 1/4	10	15	105	90	28	50	£83.90
FMC6G	1GFMC60A	1" 1/2	10	15	105	90	28	55	£87.80
FMC7G	1GFMC70A	2"	12	17	107	90	28	70	£102.77

TYPE	CODE	MB series	t	f	l	h	g	e	PRICE
FMC1M	1MFMC10A	16 x 1,5	7	10	80	70	9	22	£33.16
FMC2M	1MFMC20A	18 x 1,5	7	10	80	70	9	22	£35.84
FMC3M	1MFMC30A	20 x 1,5	7	10	95	85	12	24	£43.41
FMC4M	1MFMC40A	22 x 1,5	8,5	10	95	85	12	27	£43.46
FMC5M	1MFMC50A	24 x 2	8	12	102	90	12	30	£55.04
FMC6M	1MFMC60A	30 x 2	8	12	102	90	17	36	£71.61
FMC7M	1MFMC70A	33 x 2	8	14	104	90	17	40	£66.49
FMC8M	1MFMC80A	42 x 3	10	15	105	90	28	50	£83.90
FMC9M	1MFMC90A	48 x 3	10	15	105	90	28	55	£92.41
FMC10M	1MFMC95A	60 x 4	12	17	107	90	28	70	£102.77

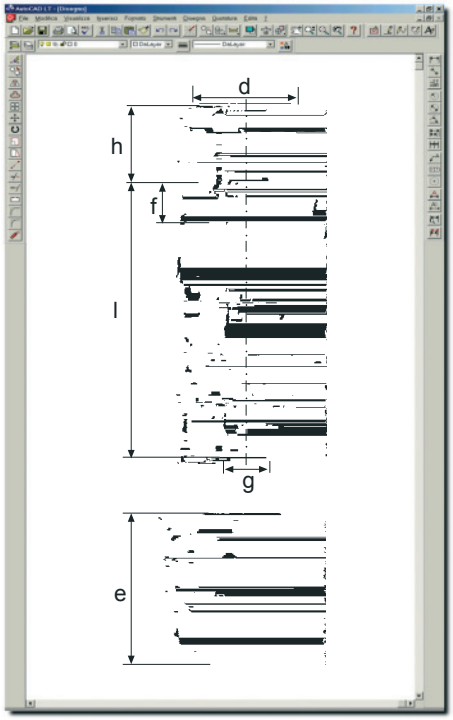

FMC/LS

Magnetic filter with dipstick and breather

- Magnetic dipstick built into breather plug.
- Galvanized-steel cover vents internal pressure and keeps out foreign bodies during the intake stroke.
- The magnetic dipstick is composed of permanent magnetic sections in special alloy with wide-radius action.
- The non-magnetic coating is smooth for easier, better cleaning.
- Recommended for **Grinding Machines Hydraulic Units and Large Tanks**.
- On request, supplied with different length.

TYPE	CODE	GAS	d	h	f	l	g	e	PRICE
FMC/LS1G	1GFLS10A	1/2"	26	22	10	170	9	27	£45.92
FMC/LS2G	1GFLS20A	3/4"	30	24	12	200	12	32	£61.18
FMC/LS3G	1GFLS30A	1"	38	29	14	200	12	40	£81.08
FMC/LS4G	1GFLS40A	1" 1/4	50	33	15	200	17	50	£98.39

50% OFF ALL PRICES

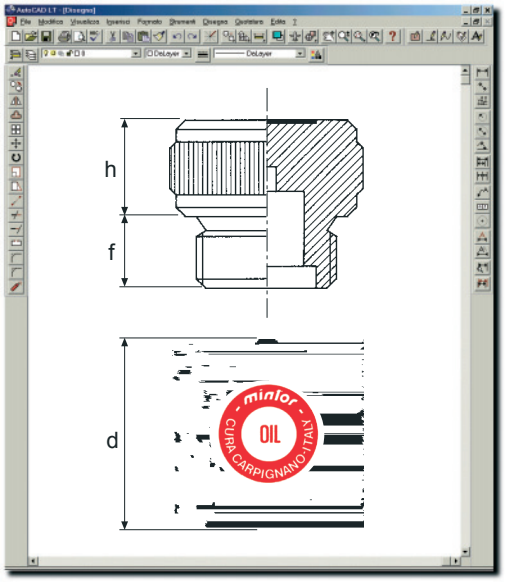

TC/Z

Filling plug

- Threaded plug with knurled round head for hand-tightening.

By request: with filling label

TYPE	CODE	GAS	h	f	d	PRICE
TC/Z0G	1GCZO00A	1/8"	12	8	20	£3.15
TC/Z1G	1GCZO10A	1/4"	12	8	22	£3.67
TC/Z2G	1GCZO20A	3/8"	13,5	10	26	£4.20
TC/Z3G	1GCZO30A	1/2"	16,5	10	30	£5.61
TC/Z4G	1GCZO40A	3/4"	20	12	40	£8.15
TC/Z5G	1GCZO50A	1"	21,5	14	45	£11.33
TC/Z6G	1GCZO60A	1" 1/4	20	15	55	£17.56
TC/Z7G	1GCZO70A	1" 1/2	20	15	55	£22.41
TC/Z8G	1GCZO80A	2"	20	17	70	£41.80

TYPE	CODE	MB series	h	f	d	PRICE
TC/Z0M	1MCZO00A	10 x 1	12	8	20	£3.15
TC/Z1M	1MCZO10A	14 x 1,5	12	8	22	£3.67
TC/Z2M	1MCZO20A	16 x 1,5	12	10	26	£4.20
TC/Z3M	1MCZO30A	18 x 1,5	12	10	26	£4.76
TC/Z4M	1MCZO40A	20 x 1,5	15	10	30	£5.32
TC/Z5M	1MCZO50A	22 x 1,5	15	10	30	£5.61
TC/Z6M	1MCZO60A	24 x 2	15	12	36	£7.97
TC/Z7M	1MCZO70A	30 x 2	20	12	42	£10.41
TC/Z8M	1MCZO80A	33 x 2	20	14	45	£11.33

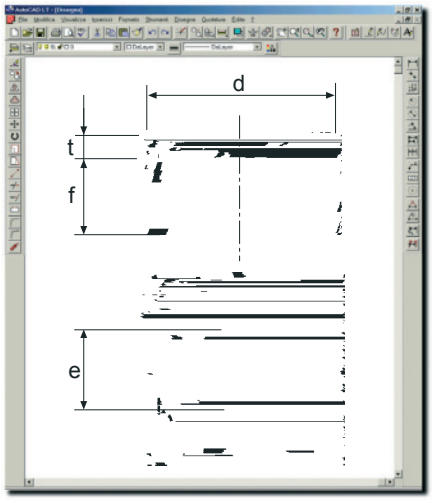

TCE

Drain filling plug with hex slot

- Made of tempered, hardened light alloy.
- High twisting resistance, suitable for applications requiring minimum projection.
- Available with metal washers only.

NORMA DIN 908 type

TYPE	CODE	GAS	d	t	f	e	PRICE
TCE0G	1GTBE00A	1/8"	14	3	8	5	£1.82
TCE1G	1GTBE10A	1/4"	18	3	12	6	£2.01
TCE2G	1GTBE20A	3/8"	22	3	12	8	£2.19
TCE3G	1GTBE30A	1/2"	26	4	14	10	£2.92
TCE4G	1GTBE40A	3/4"	32	4	16	12	£3.82
TCE5G	1GTBE50A	1"	40	5	16	17	£5.43
TCE6G	1GTBE60A	1" 1/4	49	5	16	22	£13.20
TCE7G	1GTBE70A	1" 1/2	55	5	16	24	£16.48
TCE8G	1GTBE80A	2"	68	5	20	32	£34.07

TYPE	CODE	MB series	d	t	f	e	PRICE
TCE0M	1MTBE00A	10 x 1	14	3	8	5	£1.82
TCE1M	1MTBE10A	12 x 1,5	17	3	12	6	£1.95
TCE2M	1MTBE20A	14 x 1,5	19	3	12	6	£2.01
TCE3M	1MTBE30A	16 x 1,5	21	3	12	8	£2.19
TCE4M	1MTBE40A	18 x 1,5	23	3	12	8	£2.41
TCE5M	1MTBE50A	20 x 1,5	25	4	14	10	£3.11
TCE6M	1MTBE60A	22 x 1,5	27	4	14	10	£2.92
TCE7M	1MTBE70A	24 x 1,5	29	4	14	12	£5.59
TCE8M	1MTBE80A	24 x 2	29	4	14	12	£5.59
TCE9M	1MTBE90A	26 x 1,5	32	4	16	12	£5.69
TCE10M	1MTBE91A	27 x 2	32	4	16	12	£6.11
TCE11M	1MTBE92A	30 x 1,5	36	4	16	17	£6.25
TCE12M	1MTBE93A	30 x 2	36	4	16	17	£6.25
TCE13M	1MTBE94A	33 x 2	40	5	16	17	£6.38

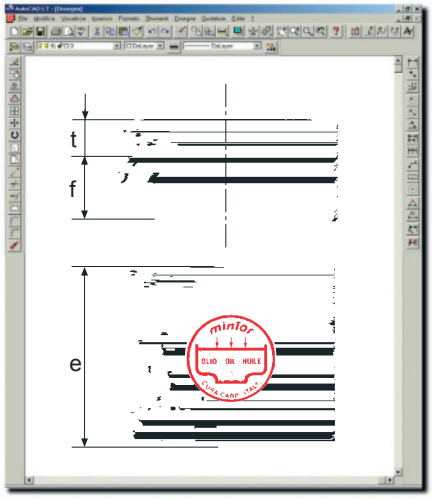

TC

Filling plug

- Tight-sealing, maximum resistance to twisting and overheating.

TYPE	CODE	GAS	t	f	e	PRICE
TC0G	1GTCO00A	1/8"	5	8	14	£2.63
TC1G	1GTCO10A	1/4"	7,5	8	17	£2.73
TC2G	1GTCO20A	3/8"	8,5	10	22	£2.84
TC3G	1GTCO30A	1/2"	8,5	10	27	£3.94
TC4G	1GTCO40A	3/4"	9,5	12	32	£5.86
TC5G	1GTCO50A	1"	9,5	14	40	£8.98
TC6G	1GTCO60A	1" 1/4	10	15	50	£16.15
TC7G	1GTCO70A	1" 1/2	10	15	55	£18.78
TC8G	1GTCO80A	2"	12	17	70	£34.31

TYPE	CODE	MB series	t	f	e	PRICE
TC0M	1MTCO00A	10 x 1	5	8	14	£2.63
TC1M	1MTCO10A	14 x 1,5	6	8	17	£2.73
TC2M	1MTCO20A	16 x 1,5	7	10	22	£2.84
TC3M	1MTCO30A	18 x 1,5	7	10	22	£3.74
TC4M	1MTCO40A	20 x 1,5	7	10	24	£4.28
TC5M	1MTCO50A	22 x 1,5	8,5	10	27	£3.94
TC6M	1MTCO60A	24 x 2	8	12	30	£6.54
TC7M	1MTCO70A	26 x 1,5	8	12	32	£7.05
TC8M	1MTCO80A	30 x 2	8	12	36	£9.20
TC9M	1MTCO90A	33 x 2	8	14	40	£9.97
TC10M	1MTCO91A	42 x 3	10	15	50	£16.15
TC11M	1MTCO92A	48 x 3	10	15	55	£20.87
TC12M	1MTCO93A	60 x 4	12	17	70	£34.31

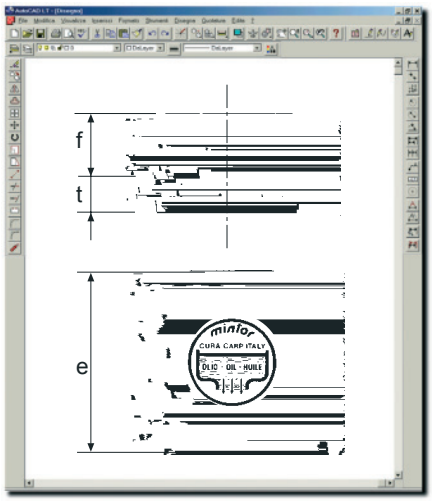

TSC

Drain plug

- Tight-sealing, maximum resistance to twisting and overheating.

TYPE	CODE	GAS	f	t	e	PRICE
TSC0G	1GTSC00A	1/8"	8	5	14	£2.63
TSC1G	1GTSC10A	1/4"	8	7,5	17	£2.73
TSC2G	1GTSC20A	3/8"	10	8,5	22	£2.84
TSC3G	1GTSC30A	1/2"	10	8,5	27	£3.94
TSC4G	1GTSC40A	3/4"	12	9,5	32	£5.86
TSC5G	1GTSC50A	1"	14	9,5	40	£8.98
TSC6G	1GTSC60A	1" 1/4	15	10	50	£16.15
TSC7G	1GTSC70A	1" 1/2	15	10	55	£18.78
TSC8G	1GTSC80A	2"	17	12	70	£34.31

TYPE	CODE	MB series	f	t	e	PRICE
TSC0M	1MTSC00A	10 x 1	8	5	14	£2.63
TSC1M	1MTSC10A	14 x 1,5	8	6	17	£2.73
TSC2M	1MTSC20A	16 x 1,5	10	7	22	£2.84
TSC3M	1MTSC30A	18 x 1,5	10	7	22	£3.74
TSC4M	1MTSC40A	20 x 1,5	10	7	24	£4.28
TSC5M	1MTSC50A	22 x 1,5	10	8,5	27	£3.94
TSC6M	1MTSC60A	24 x 2	12	8	30	£6.54
TSC7M	1MTSC70A	26 x 1,5	12	8	32	£7.05
TSC8M	1MTSC80A	30 x 2	12	8	36	£9.20
TSC9M	1MTSC90A	33 x 2	14	8	40	£9.97
TSC10M	1MTSC91A	42 x 3	15	10	50	£16.15
TSC11M	1MTSC92A	48 x 3	15	10	55	£20.87
TSC12M	1MTSC93A	60 x 4	17	12	70	£34.31

50% OFF ALL PRICES

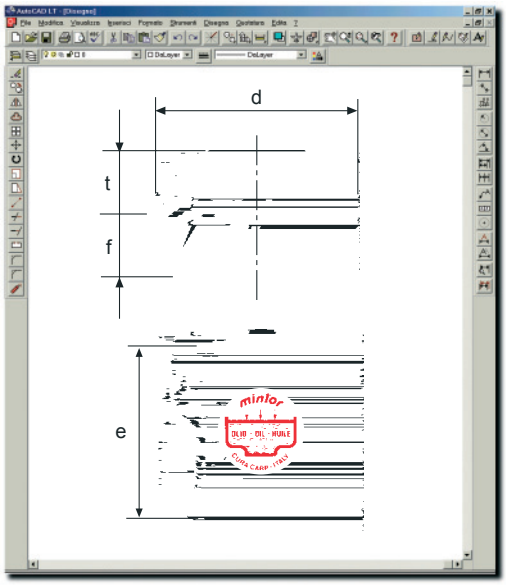

TC/F

Filling plug

- Tight-sealing, maximum resistance to twisting and overheating.
- Head milling produces a crown with greater sealing area against the crankcase.

TYPE	CODE	GAS	d	t	f	e	PRICE
TC/F0G	1GC/F00A	1/8"	14	7	8	10	£2.48
TC/F1G	1GC/F10A	1/4"	20	9,5	8	17	£2.66
TC/F2G	1GC/F20A	3/8"	22	10	9	18	£3.06
TC/F3G	1GC/F30A	1/2"	28	10,5	11	22	£4.02
TC/F4G	1GC/F40A	3/4"	32	10,5	12	27	£6.85
TC/F5G	1GC/F50A	1"	40	12	12,5	34	£8.77

TYPE	CODE	MB series	d	t	f	e	PRICE
TC/F0M	1MC/F00A	10 x 1	14	7	8	10	£2.48
TC/F1M	1MC/F10A	14 x 1,5	20	8	8	17	£2.66
TC/F2M	1MC/F20A	16 x 1,5	22	10	9	18	£3.06
TC/F3M	1MC/F30A	18 x 1,5	26	8	9	20	£3.35
TC/F4M	1MC/F40A	20 x 1,5	28	9	10	22	£3.85
TC/F5M	1MC/F50A	22 x 1,5	28	10,5	11	22	£4.02

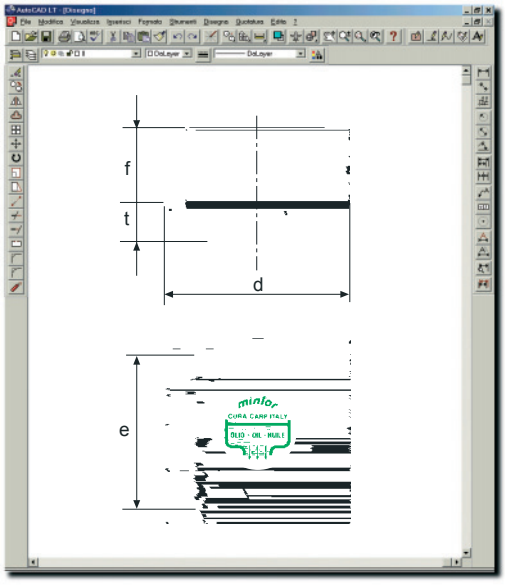

TSC/F

Drain plug

- Tight-sealing, maximum resistance to twisting and overheating.
- Head milling produces a crown with greater sealing area against the crankcase.

TYPE	CODE	GAS	d	t	f	e	PRICE
TSC/F0G	1GS/F00A	1/8"	14	7	8	10	£2.48
TSC/F1G	1GS/F10A	1/4"	20	9,5	8	17	£2.66
TSC/F2G	1GS/F20A	3/8"	22	10	9	18	£3.06
TSC/F3G	1GS/F30A	1/2"	28	10,5	11	22	£4.02
TSC/F4G	1GS/F40A	3/4"	32	10,5	12	27	£6.85
TSC/F5G	1GS/F50A	1"	40	12	12,5	34	£8.77

TYPE	CODE	MB series	d	t	f	e	PRICE
TSC/F0M	1MS/F00A	10 x 1	14	7	8	10	£2.48
TSC/F1M	1MS/F10A	14 x 1,5	20	8	8	17	£2.66
TSC/F2M	1MS/F20A	16 x 1,5	22	10	9	18	£3.06
TSC/F3M	1MS/F30A	18 x 1,5	26	8	9	20	£3.35
TSC/F4M	1MS/F40A	20 x 1,5	28	9	10	22	£3.85
TSC/F5M	1MS/F50A	22 x 1,5	28	10,5	11	22	£4.02

VISUAL LEVEL INDICATORS

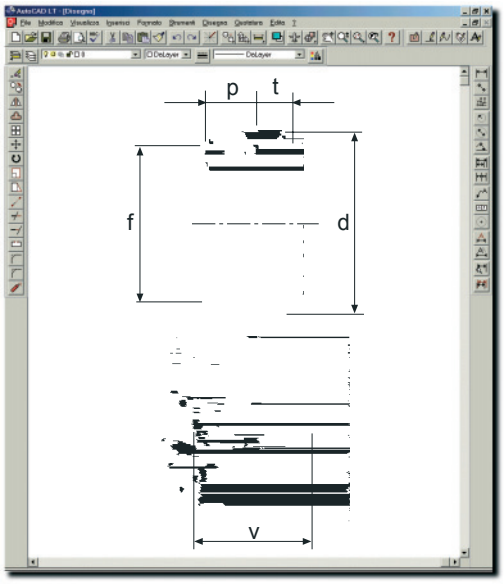

TLP

Visual level indicator non-threaded

- Transparent inspection window unaffected by high or low temperatures.
- Avoid contact with **alcohol and solvents**.
- O-ring for pressure assembly.

TYPE	CODE	O - R	p	t	d	Øf^{H11}	v	PRICE
TLP0	1PTPO00A	OR 115	9	5	20	17	11	£6.04
TLP1	1PTPO10A	OR 119	9	6	24	20	13	£6.48
TLP2	1PTPO20A	OR 128	9	8	30	26	16	£7.97
TLP3	1PTPO30A	OR 3100	10	8	34	30	21	£9.43
TLP4	1PTPO40A	OR 3118	10	8	38	35	27	£12.72
TLP5	1PTPO50A	OR 3131	10	8	42	38	27	£14.02

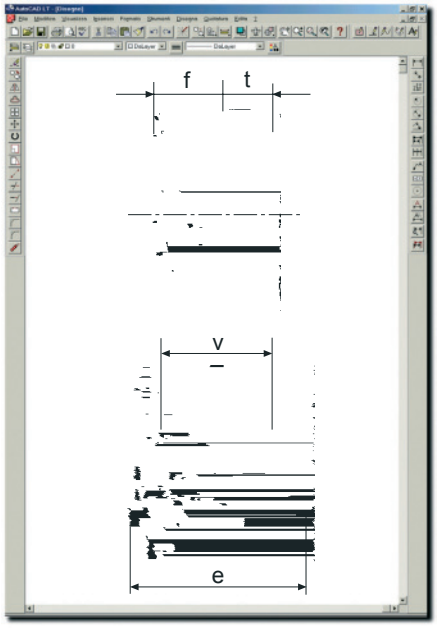

TLA

Visual level indicator

- Standard polycarbonate transparent inspection window unaffected by high or low temperatures.
- Avoid contacts with **alcohol and solvents**.
- Special version: with Pyrex glass for high temperatures.
- By request: with anchor nut for unthreaded hole.

TYPE	CODE	GAS	f	t	v	e	PRICE
TLAN1G	1GTLN10A	1/4"	8	7	10	17	£4.82
TLA2G	1GTLA20A	3/8"	9	7	13	22	£5.15
TLA3G	1GTLA30A	1/2"	10	9	16	27	£5.77
TLA4G	1GTLA40A	3/4"	11	9	21	32	£6.85
TLA5G	1GTLA50A	1"	14	10	27	40	£9.74
TLA6G	1GTLA60A	1"1/4	15	10	37	50	£19.41
TLA7G	1GTLA70A	1"1/2	15	10	40	55	£22.66
TLA8G	1GTLA80A	2"	17	14	50	70	£43.44

TYPE	CODE	MB series	f	t	v	e	PRICE
TLAN1M	1MTLN10A	14 x 1,5	8	7	10	17	£4.55
TLA2M	1MTLA20A	16 x 1,5	9	7	13	22	£4.86
TLA3M	1MTLA30A	18 x 1,5	9	7	13	22	£5.02
TLA4M	1MTLA40A	20 x 1,5	10	7	16	24	£5.27
TLA5M	1MTLA50A	22 x 1,5	10	9	16	27	£5.44
TLA6M	1MTLA60A	24 x 1,5	11	9	16	30	£8.14
TLA7M	1MTLA70A	24 x 2	11	9	16	30	£8.63
TLA8M	1MTLA80A	25 x 1,5	11	9	21	32	£8.63
TLA9M	1MTLA90A	27 x 1,5	11	9	21	32	£9.11
TLA10M	1MTLA91A	30 x 1,5	11	9	21	36	£9.48
TLA11M	1MTLA92A	30 x 2	11	9	21	36	£9.48
TLA12M	1MTLA93A	33 x 1,5	14	10	27	40	£9.74
TLA13M	1MTLA94A	33 x 2	14	10	27	40	£9.74
TLA14M	1MTLA95A	35 x 1,5	14	10	27	40	£15.25
TLA15M	1MTLA96A	40 x 1,5	12	10	37	50	£18.85
TLA16M	1MTLA97A	42 x 3	15	10	37	50	£19.41
TLA17M	1MTLA98A	48 x 3	15	10	40	55	£22.66
TLA18M	1MTLA99A	60 x 2	17	14	50	70	£43.44
TLA19M	1MTLA999	60 x 4	17	14	50	70	£43.44

50% OFF ALL PRICES

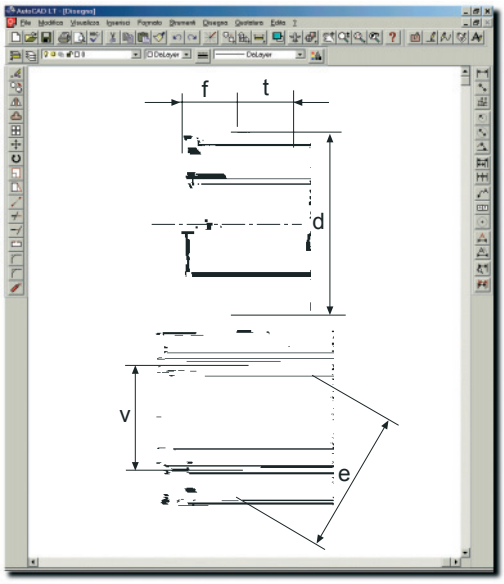

TLA/F

Visual level indicator with milled head

- Standard polycarbonate transparent inspection window unaffected by high or low temperatures.
- Avoid contacts with **alcohol and solvents**.
- Head milling produces a crown with greater sealing area against the crankcase.
- Special version: with Pyrex glass for high temperatures.

TYPE	CODE	GAS	v	e	f	t	d	PRICE
TLA/F1G	1GL/F10A	3/8"	10	18	9	9	22	£5.35
TLA/F2G	1GL/F20A	1/2"	16	22	10	9	28	£6.11
TLA/F3G	1GL/F30A	3/4"	21	27	12	11	32	£7.32
TLA/F4G	1GL/F40A	1"	27	34	12,5	12	40	£10.26
TLA/F5G	1GL/F50A	1"1/4	37	46	15	12	50	£20.17

TYPE	CODE	MB series	v	e	f	t	d	PRICE
TLA/F1M	1ML/F10A	16 x 1,5	10	18	9	9	22	£5.35
TLA/F2M	1ML/F20A	18 x 1,5	13	20	9	9	26	£5.59
TLA/F3M	1ML/F30A	20 x 1,5	16	22	10	9	28	£5.95
TLA/F4M	1ML/F40A	22 x 1,5	16	22	10	9	28	£6.11

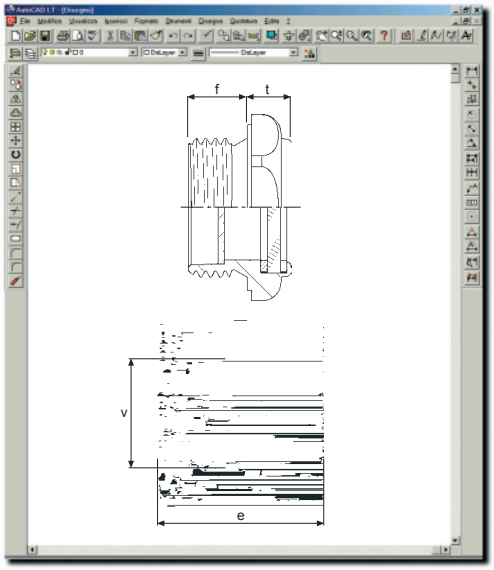

TLAX

Visual level indicator with glass

NEW

- Transparent inspection window in Pyrex glass suitable for high and low temperatures from - 20°C till + 200°C max.
- Supplied complete with internal Viton washer.
- By request supplied in brass.

TYPE	CODE	GAS	f	t	v	e	PRICE
TLAX1G	1GTLX10A	1/4"	8	9	10	17	£9.64
TLAX2G	1GTLX20A	3/8"	9	10	13	22	£10.57
TLAX3G	1GTLX30A	1/2"	10	9	16	27	£13.64
TLAX4G	1GTLX40A	3/4"	11	9	21	32	£16.79
TLAX5G	1GTLX50A	1"	14	10	27	40	£21.38
TLAX6G	1GTLX60A	1"1/4	15	10	37	50	£34.49
TLAX7G	1GTLX70A	1"1/2	15	10	40	55	£35.95
TLAX8G	1GTLX80A	2"	17	14	50	70	£35.95

TYPE	CODE	MB Series	f	t	v	e	PRICE
TLAX1M	1MTLX10A	14 x 1,5	8	9	10	17	£9.64
TLAX2M	1MTLX20A	16 x 1,5	9	10	13	22	£10.57
TLAX3M	1MTLX30A	18 x 1,5	9	10	13	22	£12.72
TLAX4M	1MTLX40A	20 x 1,5	10	10	16	24	£13.46
TLAX5M	1MTLX50A	22 x 1,5	10	9	16	27	£13.64
TLAX6M	1MTLX60A	27 x 1,5	11	9	21	32	£19.48
TLAX7M	1MTLX70A	33 x 1,5	14	10	27	40	£24.01
TLAX8M	1MTLX80A	33 x 2	14	10	27	40	£24.01
TLAX9M	1MTLX90A	35 x 1,5	14	10	27	40	£27.25
TLAX10M	1MTLX91A	40 x 1,5	12	10	37	50	£37.58
TLAX11M	1MTLX92A	42 x 3	15	10	37	50	£39.75

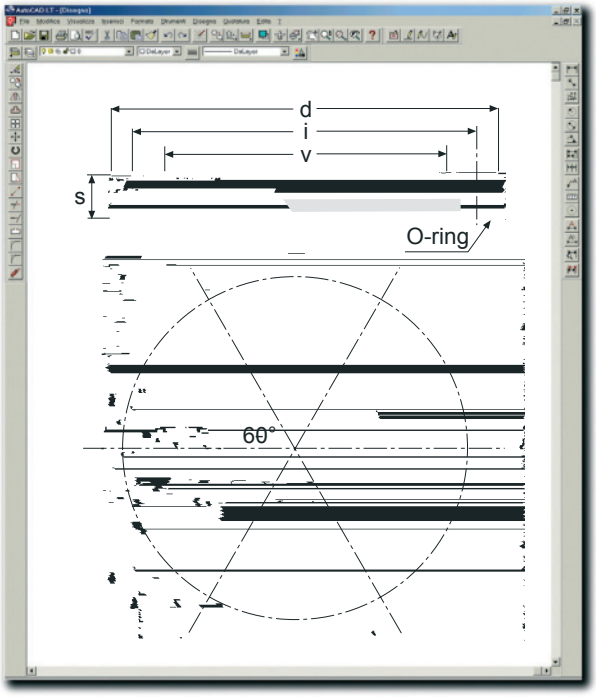

OBLÒ

Inspection porthole or liquid-level ø 100

- Made of aluminium light alloy with tempered glass; supplied complete with gum washers, anchor screws and O-ring.
- For the tightening to build a central hole of 100 mm and 6 threaded holes M6 arranged 60° on a diameter with inter-axis of 130 mm.
- The thickness of the reservoir must not be less than 5 mm.

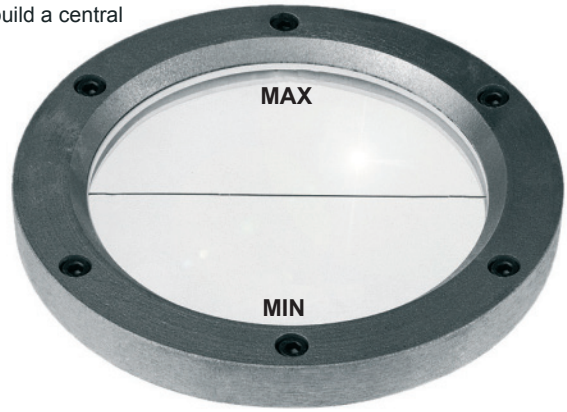

TYPE	CODE	v	d	i	s	PRICE
OBLÒ	1OBLO30A	Ø 100	Ø 150	Ø 130	19,5	£72.08

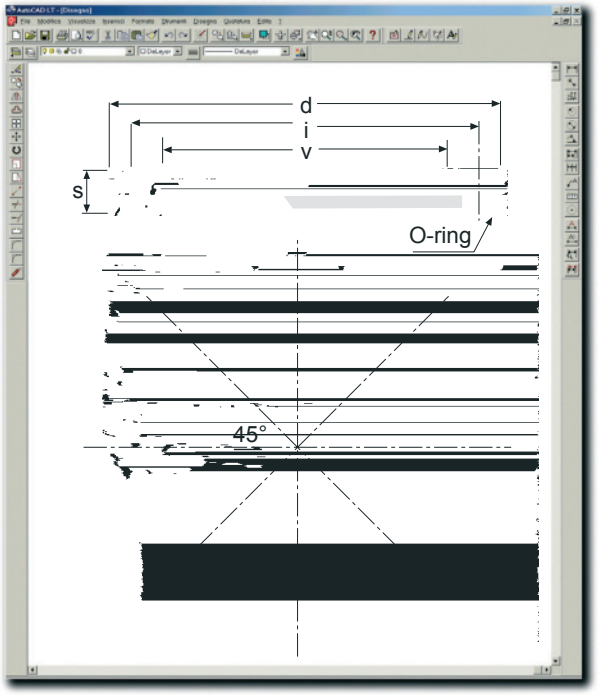

OBLÒ

Inspection porthole or liquid-level ø 148

- Made of aluminium light alloy with tempered glass; supplied complete with gum washers, anchor screws and O-ring.
- For the tightening to build a central hole of 148 mm and 8 threaded holes M6 arranged 45° on a diameter with inter-axis of 180 mm.
- The thickness of the reservoir must not be less than 5 mm.

TYPE	CODE	v	d	i	s	PRICE
OBLÒ	1OBLO40A	Ø 148	Ø 202	Ø 180	21,5	£98.23

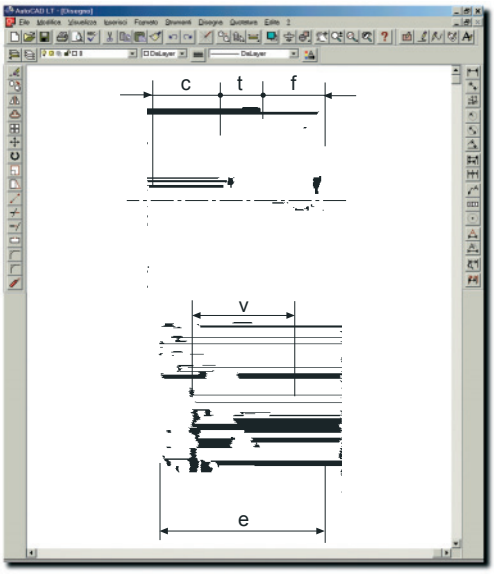

IFC

Dome-shaped level gauge

- Transparent glass that does not alter at high and low temperatures.
- It is particularly suitable for seeing the fluid from the side, as well as the circulation of fluid from the top.
- Avoid contact with **alcohol and solvents**.
- It is supplied with fixing nut for non- threaded holes on request.

TYPE	CODE	GAS	f	t	v	e	c	PRICE
IFC0G	1GIFC00A	3/8"	8	6	16	24	9	£5.26
IFC1G	1GIFC10A	1/2"	10	9,5	16	27	9	£5.77
IFC2G	1GIFC20A	3/4"	11	10	19	32	13	£6.85
IFC3G	1GIFC30A	1"	14	10	25	40	17	£9.74
IFC4G	1GIFC40A	1"1/4	15	10,5	33	50	23	£21.70
IFC5G	1GIFC50A	1"1/2	15	10,5	36	55	24	£25.33
IFC6G	1GIFC60A	2"	17	14	42	70	28	£43.44

TYPE	CODE	MB series	f	t	v	e	c	PRICE
IFC0M	1MIFC00A	16x1,5	8	6	16	24	9	£5.26
IFC0M	1MIFC01A	18x1,5	8	6	16	24	9	£5.26
IFC1M	1MIFC10A	20 x 1,5	10	8	16	24	9	£6.85
IFC2M	1MIFC20A	22 x 1,5	10	9,5	16	27	9	£5.77
IFC3M	1MIFC30A	24 x 1,5	11	9,5	14	30	9	£8.63
IFC4M	1MIFC40A	25 x 1,5	11	10	18	32	13	£8.63
IFC5M	1MIFC50A	27 x 1,5	11	10	18	32	13	£10.72
IFC6M	1MIFC60A	30 x 1,5	11	11	23	36	15	£11.17
IFC7M	1MIFC70A	33 x 1,5	14	10,5	25	40	17	£11.46
IFC8M	1MIFC80A	35 x 1,5	14	10,5	23	40	17	£15.25
IFC9M	1MIFC90A	40 x 1,5	15	10,5	33	50	23	£22.18
IFC10M	1MIFC95A	45 x 1,5	15	10,5	36	55	24	£24.81
IFC11M	1MIFC99A	52 x 1,5	17	14	42	60	28	£43.44

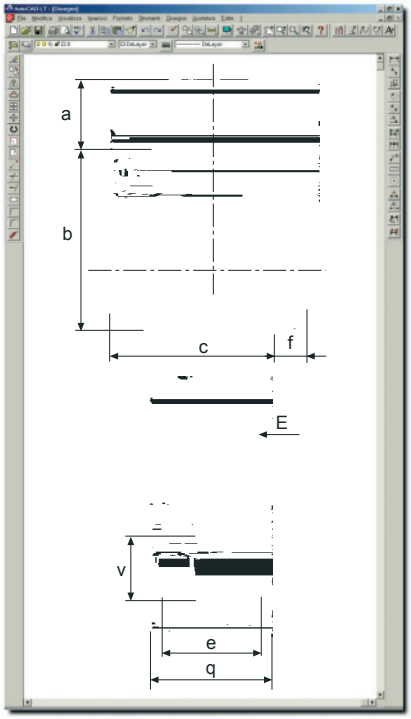

GTSF

Level indicator unit with breather plug

- This unit was designed to satisfy both technical and economical requirements, because it can be applied with a single hole obtaining three services: oil filling, vapor venting, level indication.
- Avoid contact with **alcohol and solvents**.

TYPE	CODE	GAS	v	e	q	a	b	c	f	E	PRICE
GTSF1G	1GGSF10M	3/8"	16	27	30	20	46	43	11	22	£43.10
GTSF2G	1GGSF20M	1/2"	16	27	30	21	46	43	11	22	£44.80
GTSF3G	1GGSF30M	3/4"	21	32	40	22	60	52	11	27	£55.43
GTSF4G	1GGSF40M	1"	27	40	40	26	60	55	16	32	£63.91

TYPE	CODE	MB series	v	e	q	a	b	c	f	E	PRICE
GTSF1M	1MGSF10M	16 x 1,5	16	27	30	20	46	43	11	22	£43.10
GTSF2M	1MGSF20M	18 x 1,5	16	27	30	21	46	43	11	22	£43.53
GTSF3M	1MGSF30M	20 x 1,5	16	27	30	21	46	43	11	22	£44.16
GTSF4M	1MGSF40M	22 x 1,5	16	27	30	21	46	43	11	22	£44.80
GTSF5M	1MGSF50M	24 x 2	16	30	40	22	60	52	11	27	£59.25
GTSF6M	1MGSF60M	30 x 2	21	36	40	26	60	52	14	27	£62.90
GTSF7M	1MGSF70A	33 x 2	27	40	40	26	60	55	16	32	£63.91

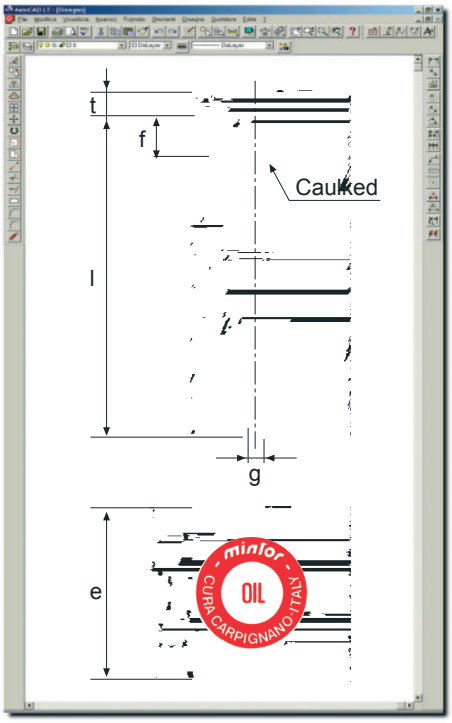

TCLA

Fillin plug with dipstick

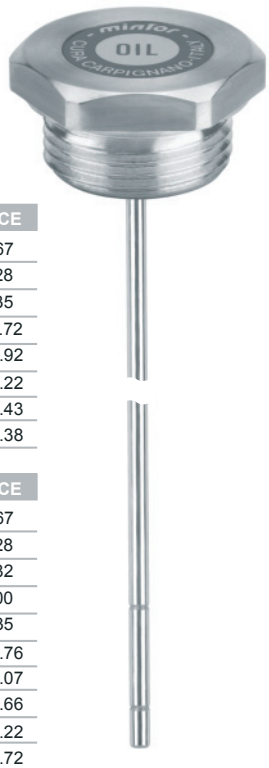

- Hex-head threaded plug with built-in dipstick.
- Also available in various min. and max. notches and lengths.

TYPE	CODE	GAS	t	f	l	g	e	PRICE
TCLA1G	1GCLA10A	1/4"	6	8	120	5	17	£5.67
TCLA2G	1GCLA20A	3/8"	8,5	10	170	5	22	£6.28
TCLA3G	1GCLA30A	1/2"	8,5	10	170	5	27	£7.35
TCLA4G	1GCLA40A	3/4"	9,5	12	200	5	32	£10.72
TCLA5G	1GCLA50A	1"	9,5	14	200	5	40	£13.92
TCLA6G	1GCLA60A	1" 1/4	10	15	250	5	50	£20.22
TCLA7G	1GCLA70A	1" 1/2	10	15	250	5	55	£24.43
TCLA8G	1GCLA80A	2"	12	17	250	5	70	£42.38

TYPE	CODE	MB series	t	f	l	g	e	PRICE
TCLA1M	1MCLA10A	14 x 1,5	6	8	120	5	17	£5.67
TCLA2M	1MCLA20A	16 x 1,5	7	10	170	5	22	£6.28
TCLA3M	1MCLA30A	18 x 1,5	7	10	170	5	22	£6.82
TCLA4M	1MCLA40A	20 x 1,5	7	10	170	5	24	£7.00
TCLA5M	1MCLA50A	22 x 1,5	7	10	170	5	27	£7.35
TCLA6M	1MCLA60A	24 x 2	8	12	200	5	30	£10.76
TCLA7M	1MCLA70A	30 x 2	8	12	200	5	36	£14.07
TCLA8M	1MCLA80A	33 x 2	8	14	200	5	40	£14.66
TCLA9M	1MCLA90A	42 x 3	10	15	250	5	50	£20.22
TCLA10M	1MCLA95A	48 x 3	10	15	250	5	55	£25.72
TCLA11M	1MCLA99A	60 x 4	12	17	250	5	70	£44.62

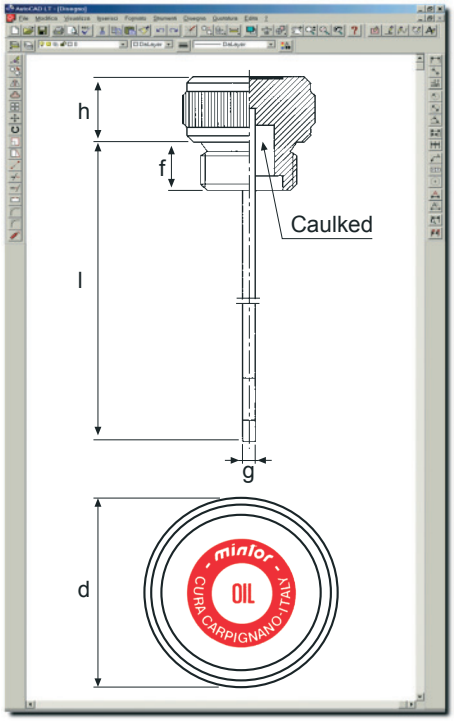

TCLA/Z

Filling plug with dipstick

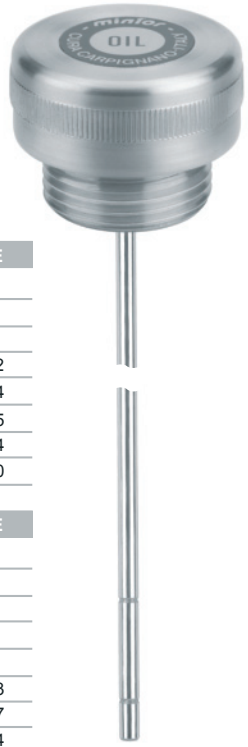

- Threaded plug with knurled round head for hand-tightening.
- Built-in dipstick.
- Available on request with various min. and max. notches and lengths.

TYPE	CODE	GAS	h	f	l	g	d	PRICE
TCLA/Z1G	1GLAZ10A	1/4"	12	8	120	5	22	£5.77
TCLA/Z2G	1GLAZ20A	3/8"	13,5	10	170	5	26	£6.41
TCLA/Z3G	1GLAZ30A	1/2"	16,5	10	170	5	30	£7.50
TCLA/Z4G	1GLAZ40A	3/4"	20	12	200	5	40	£10.82
TCLA/Z5G	1GLAZ50A	1"	21,5	14	200	5	45	£14.84
TCLA/Z6G	1GLAZ60A	1" 1/4	20	15	250	5	55	£20.35
TCLA/Z7G	1GLAZ70A	1" 1/2	20	15	250	5	55	£24.94
TCLA/Z8G	1GLAZ80A	2"	20	17	250	5	70	£45.00

TYPE	CODE	MB series	h	f	l	g	d	PRICE
TCLA/Z1M	1MLAZ10A	14 x 1,5	12	8	120	5	22	£5.77
TCLA/Z2M	1MLAZ20A	16 x 1,5	12	10	170	5	26	£6.41
TCLA/Z3M	1MLAZ30A	18 x 1,5	12	10	170	5	26	£6.69
TCLA/Z4M	1MLAZ40A	20 x 1,5	15	10	170	5	30	£7.28
TCLA/Z5M	1MLAZ50A	22 x 1,5	15	10	170	5	30	£7.50
TCLA/Z6M	1MLAZ60A	24 x 2	15	12	200	5	36	£11.23
TCLA/Z7M	1MLAZ70A	30 x 2	20	12	200	5	42	£14.37
TCLA/Z8M	1MLAZ80A	33 x 2	20	14	200	5	45	£14.84

50% OFF ALL PRICES

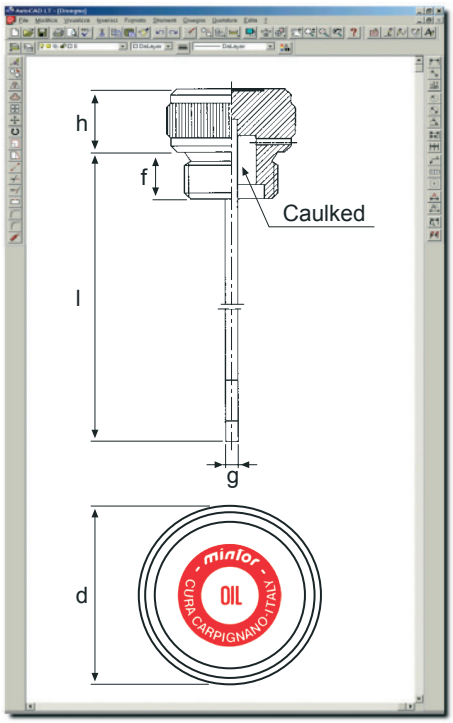

TCLS/Z

Filling plug with dipstick and breather

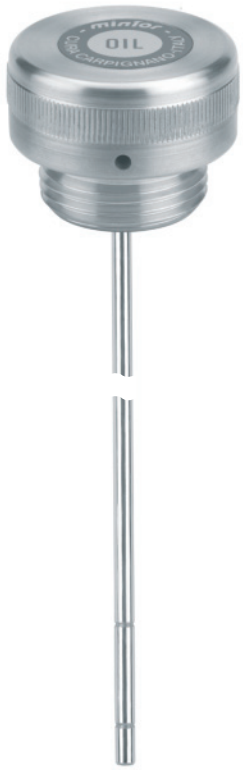

- Threaded plug with knurled round head for hand-tightening.
- Hole for venting internal pressure.
- Built-in dipstick.
- Available in various max. and min. notches and lengths on request.
- For applications requiring extratight sealing, type LSF is recommended.

TYPE	CODE	GAS	h	f	l	g	d	PRICE
TCLS/Z1G	1GLSZ10A	1/4"	12	8	120	5	22	£6.28
TCLS/Z2G	1GLSZ20A	3/8"	13,5	10	170	5	26	£6.87
TCLS/Z3G	1GLSZ30A	1/2"	16,5	10	170	5	30	£8.10
TCLS/Z4G	1GLSZ40A	3/4"	20	12	200	5	40	£11.38
TCLS/Z5G	1GLSZ50A	1"	21,5	14	200	5	45	£15.48
TCLS/Z6G	1GLSZ60A	1" 1/4	20	15	250	5	55	£21.00
TCLS/Z7G	1GLSZ70A	1" 1/2	20	15	250	5	55	£25.64
TCLS/Z8G	1GLSZ80A	2"	20	17	250	5	70	£45.46

TYPE	CODE	MB series	h	f	l	g	d	PRICE
TCLS/Z1M	1MLSZ10A	14 x 1,5	12	8	120	5	22	£6.28
TCLS/Z2M	1MLSZ20A	16 x 1,5	12	10	170	5	26	£6.87
TCLS/Z3M	1MLSZ30A	18 x 1,5	12	10	170	5	26	£7.28
TCLS/Z4M	1MLSZ40A	20 x 1,5	15	10	170	5	30	£7.89
TCLS/Z5M	1MLSZ50A	22 x 1,5	15	10	170	5	30	£8.10
TCLS/Z6M	1MLSZ60A	24 x 2	15	12	200	5	36	£11.89
TCLS/Z7M	1MLSZ70A	30 x 2	20	12	200	5	42	£15.00
TCLS/Z8M	1MLSZ80A	33 x 2	21,5	14	200	5	45	£15.48

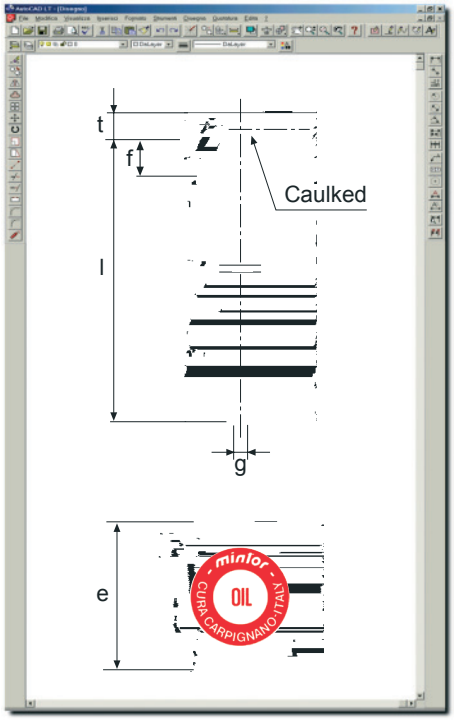

TCLS

Filling plug with dipstick and breather hole

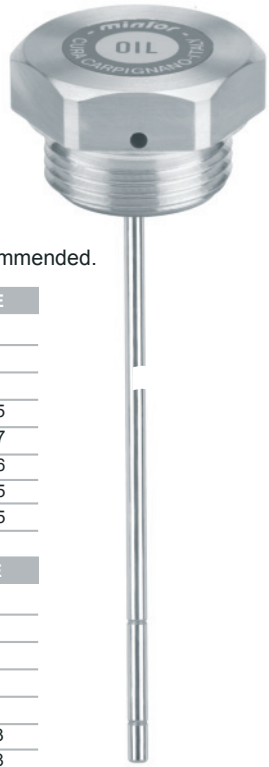

- Threaded plug with hex head and breather hole for venting internal pressure.
- Built-in dipstick.
- Available with various min. and max. notches and lengths.
- For applications requiring extra-tight sealing, type LSF is recommended.

TYPE	CODE	GAS	t	f	l	g	e	PRICE
TCLS1G	1GCSL10A	1/4"	6	8	120	5	17	£6.04
TCLS2G	1GCSL20A	3/8"	8	10	170	5	22	£6.64
TCLS3G	1GCSL30A	1/2"	9	10	170	5	27	£7.72
TCLS4G	1GCSL40A	3/4"	9	12	200	5	32	£11.05
TCLS5G	1GCSL50A	1"	12	14	200	5	40	£15.07
TCLS6G	1GCSL60A	1" 1/4	14	15	250	5	50	£20.56
TCLS7G	1GCSL70A	1" 1/2	14	15	250	5	55	£26.15
TCLS8G	1GCSL80A	2"	14	17	250	5	70	£45.05

TYPE	CODE	MB series	t	f	l	g	e	PRICE
TCLS1M	1MCSL10A	14 x 1,5	6	8	120	5	17	£6.04
TCLS2M	1MCSL20A	16 x 1,5	8	10	170	5	22	£6.64
TCLS3M	1MCSL30A	18 x 1,5	8	10	170	5	22	£7.00
TCLS4M	1MCSL40A	20 x 1,5	9	10	170	5	24	£7.32
TCLS5M	1MCSL50A	22 x 1,5	9	10	170	5	27	£7.72
TCLS6M	1MCSL60A	24 x 2	9	12	200	5	30	£11.13
TCLS7M	1MCSL70A	30 x 2	10	12	200	5	36	£14.48
TCLS8M	1MCSL80A	33 x 2	12	14	200	5	40	£15.07
TCLS9M	1MCSL90A	42 x 3	14	15	250	5	50	£20.56
TCLS10M	1MCSL95A	48 x 3	14	15	250	5	55	£26.15
TCLS11M	1MCSL99A	60 x 4	14	17	250	5	70	£45.05

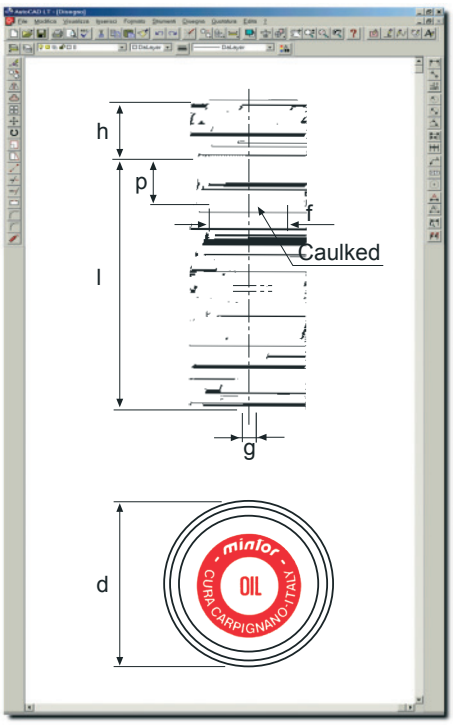

ILA

Level indicator

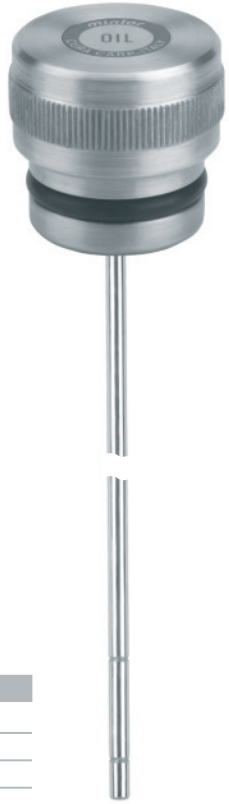

- O-ring version for smooth holes.
- Knurled round head.
- Built-in dipstick.
- Also available with different min. and max. notches and lengths.

TYPE	CODE	O - R	h	p	l	Ø f H11	g	d	PRICE
ILA0	1PILA00A	OR 108	12	20	120	12	5	21	£11.28
ILA1	1PILA10A	OR 115	12	9	170	17	5	25	£10.41
ILA2	1PILA20A	OR 119	15	9	170	20	5	30	£11.33
ILA3	1PILA30A	OR 3081	15	11	170	25	5	32	£12.43
ILA4	1PILA40A	OR 3100	18	14	200	30	5	36	£15.18
ILA5	1PILA50A	OR 4112	18	14	200	35	5	40	£18.20

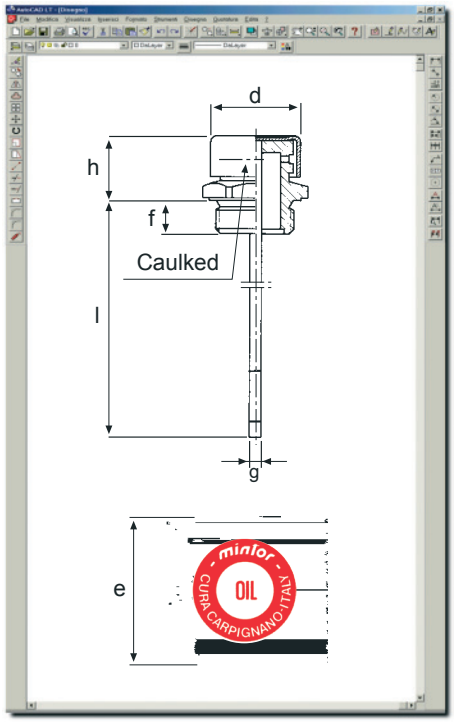

ILAF Level indicator with breather

- Version for threaded holes.
- Large chamber with cut perpendicular to the axis protected by its cover of galvanized steel that keeps out foreign bodies and vents internal pressure.
- Built-in dipstick.
- Also available in various min. and max.notches and lengths.
- For applications requiring extratight sealing, type LSF is recommended.

TIPO	COD.	GAS	d	h	f	l	g	e	PRICE
ILAF0G	1GIFA00A	1/4"	16,5	17	8	120	5	17	£10.56
ILAF1G	1GIFA10A	3/8"	22	20	9	170	5	22	£10.56
ILAF2G	1GIFA20A	1/2"	26	22	10	170	5	27	£11.26
ILAF3G	1GIFA30A	3/4"	30	24	12	200	5	32	£13.79
ILAF4G	1GIFA40A	1"	38	29	14	200	5	40	£19.36
ILAF5G	1GIFA50A	1" 1/4	50	33	15	250	5	50	£30.79
ILAF6G	1GIFA60A	1" 1/2	55	33	15	250	5	55	£36.31
ILAF7G	1GIFA70A	2"	70	40	17	250	5	70	£71.23

TIPO	COD.	Serie MB	d	h	f	l	g	e	PRICE
ILAF0M	1MIFA00A	14 x 1,5	16,5	17	8	120	5	17	£10.56
ILAF1M	1MIFA10A	16 x 1,5	22	20	9	170	5	22	£10.56
ILAF2M	1MIFA20A	18 x 1,5	22	20	10	170	5	22	£10.76
ILAF3M	1MIFA30A	20 x 1,5	24	21	10	170	5	24	£10.99
ILAF4M	1MIFA40A	22 x 1,5	26	22	10	170	5	27	£11.26
ILAF5M	1MIFA50A	24 x 2	30	24	12	200	5	30	£13.74
ILAF6M	1MIFA60A	30 x 2	30	25	12	200	5	36	£18.85
ILAF7M	1MIFA70A	33 x 2	38	29	14	200	5	40	£19.36
ILAF8M	1MIFA80A	42 x 3	50	33	15	250	5	50	£30.80
ILAF9M	1MIFA90A	48 x 3	55	33	15	250	5	55	£36.31
ILAF10M	1MIFA95A	60 x 4	70	40	17	250	5	70	£71.23

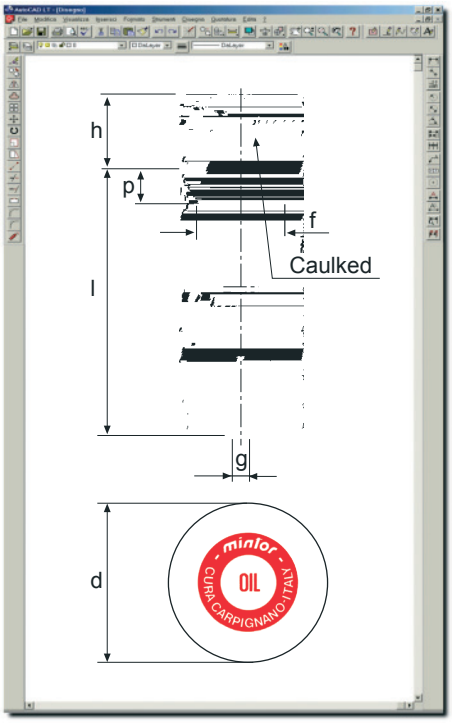

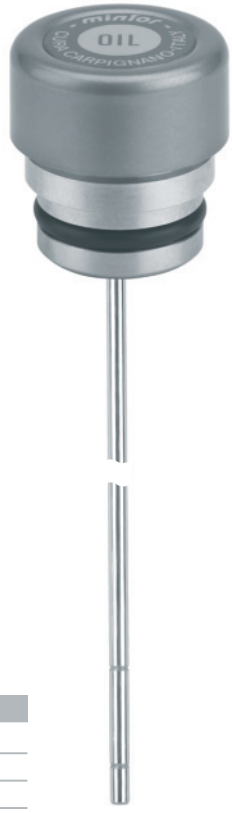

ILAS

Level indicator with breather

- O-ring version for smooth holes.
- Large chamber with cut perpendicular to the axis protected by its cover of galvanized steel that keeps out foreign bodies and vents internal pressure.
- Built-in dipstick.
- Also available in various min. and max. notches and lengths.

TYPE	CODE	O - R	h	p	l	Ø f H11	g	d	PRICE
ILAS1	1PISA10A	OR 115	18	9	170	17	5	22	£11.23
ILAS2	1PISA20A	OR 119	19	9	170	20	5	26	£11.69
ILAS3	1PISA30A	OR 3081	21	11	170	25	5	30	£14.02
ILAS4	1PISA40A	OR 3100	26	14	200	30	5	38	£19.69
ILAS5	1PISA50A	OR 4112	30	14	200	35	5	50	£31.31

LSF

Level indicator with breather

- Breather plug and level indicator with galvanized-steel cover and suitably designed internal valve calibrated from 0,05 to 0,10 bar, that opens at intervals to vent internal pressure created by fluid turbulence.
- It is especially recommended for applications on **high-rpm speed-change gears**.

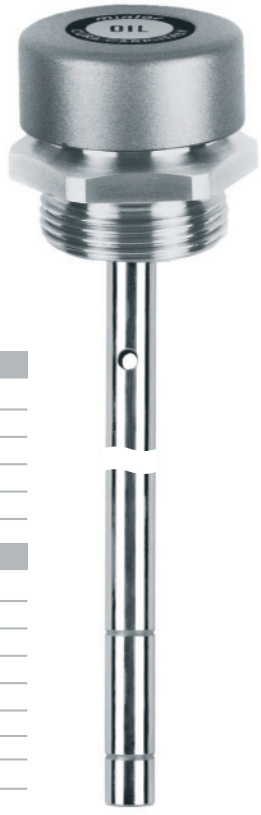

TIPO	COD.	GAS	d	h	f	l	g	e	PRICE
LSF1G	1GLSF10A	1/4"	16,5	17,5	9	170	8	17	£14.00
LSF2G	1GLSF20A	3/8"	22	19	11	170	10	22	£15.45
LSF3G	1GLSF30A	1/2"	26	20	11	170	10	27	£16.72
LSF4G	1GLSF40A	3/4"	30	24	12	200	10	32	£20.07
LSF5G	1GLSF50A	1"	38	29	14	200	10	40	£27.05

TIPO	COD.	Serie MB	d	h	f	l	g	e	PRICE
LSF1M	1MLSF10A	14 x 1,5	16,5	17,5	9	170	8	17	£14.00
LSF2M	1MLSF20A	16 x 1,5	22	19	11	170	10	22	£15.45
LSF3M	1MLSF30A	18 x 1,5	22	19	11	170	10	22	£15.85
LSF4M	1MLSF40A	20 x 1,5	24	20	11	170	10	24	£16.43
LSF5M	1MLSF50A	22 x 1,5	26	20	11	170	10	27	£16.72
LSF6M	1MLSF60A	24 x 2	30	24	12	170	10	30	£19.50
LSF7M	1MLSF70A	30 x 2	30	25	14	200	10	36	£26.37
LSF8M	1MLSF80A	33 x 2	38	29	14	200	10	40	£27.05

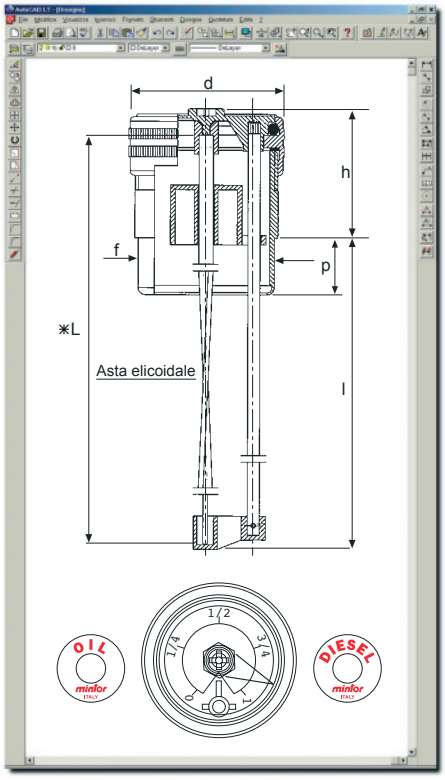

Registered model

TRBF/LG

Visual level indicator with float system

- Composed of aluminium light alloy female cover with visual dial.
- It is screwed on burnished steel sleeve which is welded onto the machine cover or tank.
- Complete with float system, it allows an exact and constant indication of the level of fluid inside the tank.
- Especially designed for application on **agricultural, earth moving, building machinery and hydraulic units**.
- Temperature during use 80°C max.
- By request with breather. Avoid contacts with **alcohol and solvents**.
- **It can be supplied with or without sleeve.**

TYPE	OIL CODE	DIESEL CODE	GAS	L	d	h	p	l	f	PRICE
TRBF/LG1G	1LGBS301	1LGBS305	2”	200	65	56	24	160	57	£75.74
TRBF/LG2G	1LGBS302	1LGBS306	2”	300	65	56	24	260	57	£77.02
TRBF/LG3G	1LGBS303	1LGBS307	2”	350	65	56	24	310	57	£77.59
TRBF/LG4G	1LGBS304	1LGBS308	2”	400	65	56	24	360	57	£78.37

TYPE	OIL CODE	DIESEL CODE	METRIC	L	d	h	p	l	f	PRICE
TRBF/LG1M	1LGBS401	1LGBS405	60 X 2	200	65	56	24	160	57	£75.74
TRBF/LG2M	1LGBS402	1LGBS406	60 X 2	300	65	56	24	260	57	£77.02
TRBF/LG3M	1LGBS403	1LGBS407	60 X 2	350	65	56	24	310	57	£77.59
TRBF/LG4M	1LGBS404	1LGBS408	60 X 2	400	65	56	24	360	57	£78.37

* variable data on customer’s request (max. 900 mm)

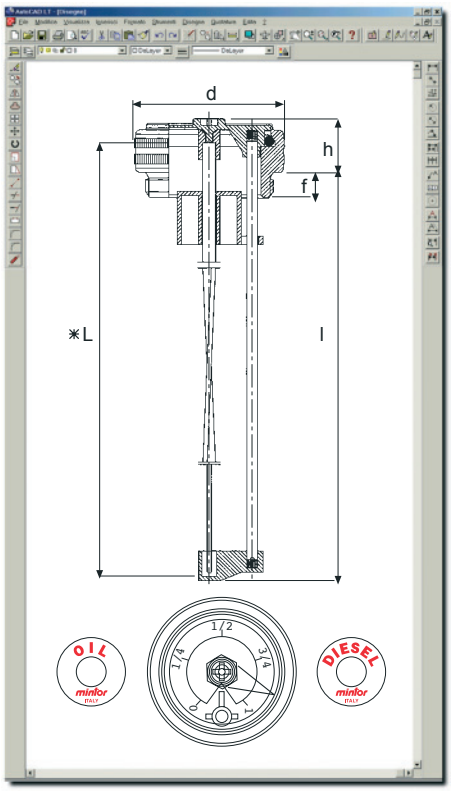

Registered model

TC/ZLG

Visual level indicator with float system

- Composed of aluminium light alloy male cover with visual dial.
- Complete with float system, it allows an exact and constant indication of the level of fluid inside the tank.
- Especially designed for application on **agricultural, earth moving, building machinery and hydraulic units**.
- Supplied with O-ring.
- Temperature during use 80°C max.
- By request with breather.
- Avoid contacts with **alcohol and solvents**.

TYPE	OIL CODE	DIESEL CODE	GAS	L	d	h	f	l	PRICE
TC/ZLG1G	1LGTM304	1LGTM300	2”	200	70	25	12	192	£68.50
TC/ZLG2G	1LGTM305	1LGTM301	2”	300	70	25	12	292	£69.70
TC/ZLG3G	1LGTM306	1LGTM302	2”	350	70	25	12	342	£70.31
TC/ZLG4G	1LGTM307	1LGTM303	2”	400	70	25	12	392	£70.96

TYPE	OIL CODE	DIESEL CODE	METRIC	L	d	h	f	l	PRICE
TC/ZLG1M	1LGTM404	1LGTM400	60 X 2	200	70	25	12	192	£68.50
TC/ZLG2M	1LGTM405	1LGTM401	60 X 2	300	70	25	12	292	£69.70
TC/ZLG3M	1LGTM406	1LGTM402	60 X 2	350	70	25	12	342	£70.31
TC/ZLG4M	1LGTM407	1LGTM403	60 X 2	400	70	25	12	392	£70.96

* variable data on customer’s request (max. 900 mm)

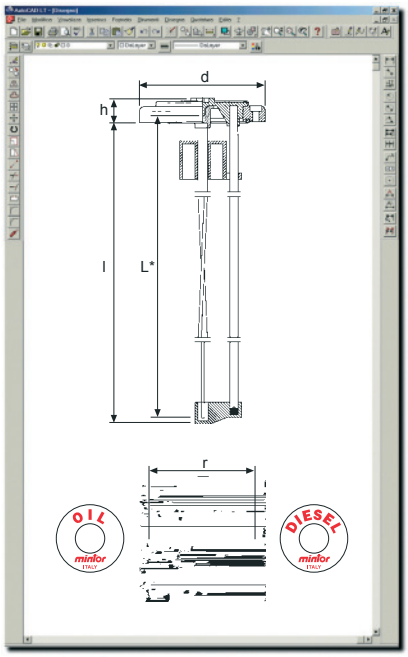

Registered model

LGF68

Flanged level indicator with float system

- Composed of aluminium light alloy flanged cover with orientable dial.
- Applicable to holes 50 to 54 mm.
- Complete with float system, it allows an exact and constant indication of the level of fluid inside the tank.
- Supplied with O-ring and allen screw M4 for the fixing.
- Especially designed for application on **agricultural, earth moving, building machinery and hydraulic units**.
- Temperature during use 80° C max.
- Avoid contacts with **alcohol and solvents**.
- On request, provided in different colours.

TYPE	OIL CODE	GASOIL CODE	L*	d	h	l	r	PRICE
LGF681	1LGF6801	1LGF6806	200	80	16	203	68	£81.80
LGF682	1LGF6802	1LGF6807	250	80	16	253	68	£82.56
LGF683	1LGF6803	1LGF6808	300	80	16	303	68	£83.20
LGF684	1LGF6804	1LGF6809	350	80	16	353	68	£84.05
LGF685	1LGF6805	1LGF6810	400	80	16	403	68	£84.87

* variable data on customer's request (max. 900 mm)

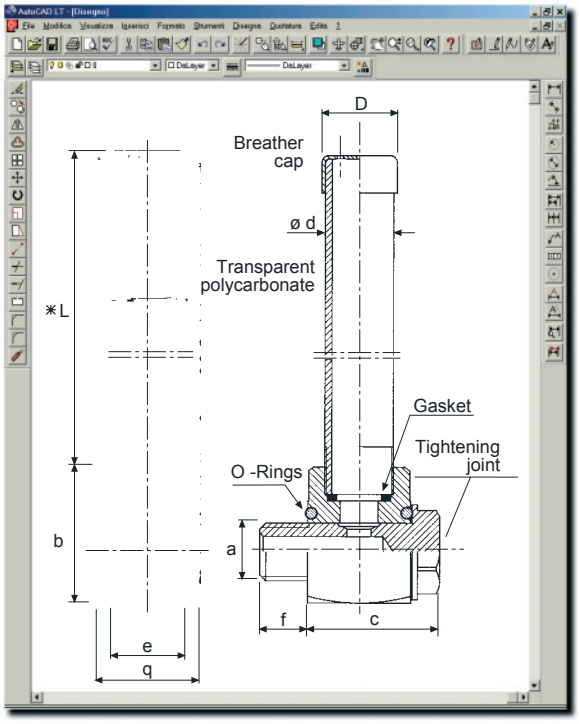

GLVS

Vertical level indicator with single thread

- Vertical level indicator with single thread to control fluid level.
- Realized with black anodizated aluminium light alloy little blocks and transparent tube; available completed with O-Rings.
- Avoid contact with **petrol, benzine, alcohol, petroleum, toluol and glycol**.

TYPE	CODE	a	L*	b	e	q	D	d	c	f	PRICE
GLVS1G	1GLVS10A	3/8"	50	40	22	30	22	20	43	10	£39.88
GLVS2G	1GLVS20A	3/8"	100	40	22	30	22	20	43	10	£41.44
GLVS3G	1GLVS30A	3/8"	150	40	22	30	22	20	43	10	£43.51
GLVS4G	1GLVS40A	3/8"	200	40	22	30	22	20	43	10	£45.64

* variable data on customer's request (max. 200 mm)

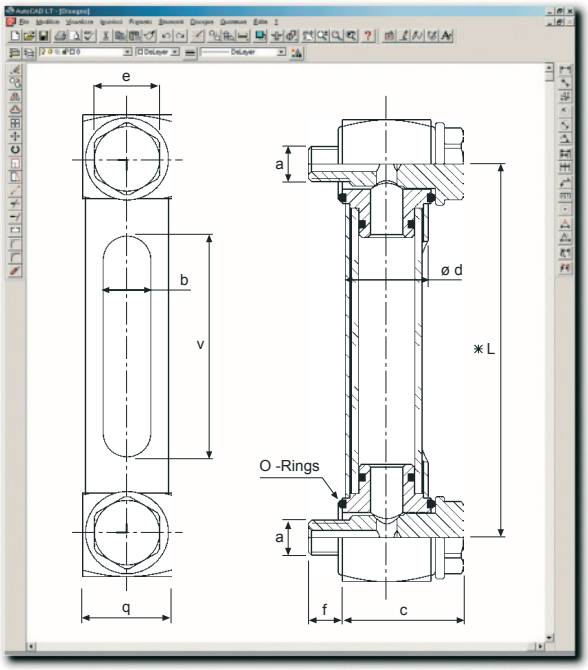

GLVX

NEW

Vertical level indicator with double thread, with pyrex glass and protection

- Vertical level indicator with double thread to control fluid level.
- Realized with aluminium light alloy little blocks, trasparent tube made in pyrex glass and Viton O-Rings.
- Suitable for low and high temperatures - 20°C + 200°C max.
- Supplied complete with protection.

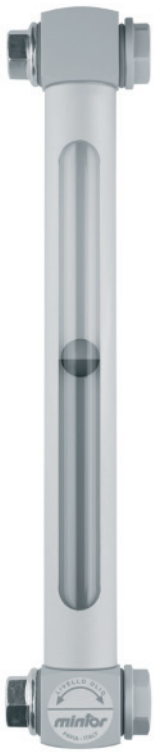

TYPE	CODE	a	L*	e	q	d	c	f	v	b	PRICE
GLVX1G	1GLVX10A	3/8"	127	22	30	28	43	10	75	16	£96.16
GLVX2G	1GLVX20A	3/8"	254	22	30	28	43	10	202	16	£117.71
GLVX1M	1MLVX10A	10x1,5	127	22	30	28	43	10	75	16	£96.16
GLVX2M	1MLVX20A	10x1,5	254	22	30	28	43	10	202	16	£117.71
GLVX3M	1MLVX30A	12x1,75	127	22	30	28	43	10	75	16	£96.16
GLVX4M	1MLVX40A	12x1,75	254	22	30	28	43	10	202	16	£117.71

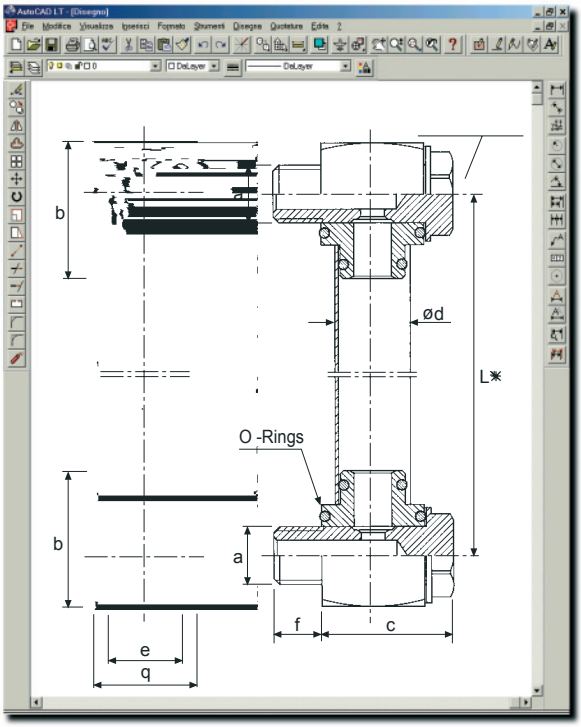

GLV

Vertical level indicator with double thread

- Vertical level indicator with double thread to control fluid level.
- Realized with black anodizated aluminium light alloy little blocks and transparent tube; available completed with O-Rings.
- Avoid contact with **petrol, benzine, alcohol, petroleum, toluol and glycol**.

TYPE	CODE	a	L*	b	e	q	d	c	f	PRICE
GLV1G	1GGLV10A	3/8"	500	40	22	30	22	43	10	£81.05
GLV2G	1GGLV20A	3/8"	1000	40	22	30	22	43	10	£95.96
GLV3G	1GGLV30A	3/8"	1500	40	22	30	22	43	10	£114.14
GLV4G	1GGLV40A	3/8"	2000	40	22	30	22	43	10	£132.34

*

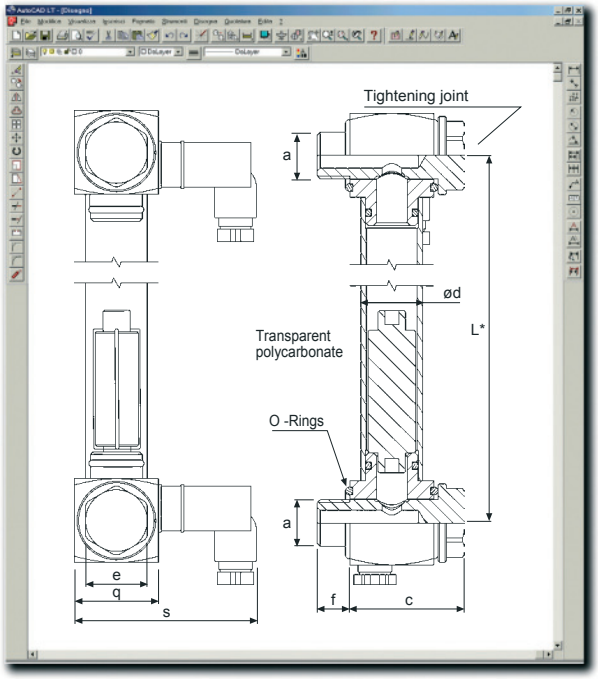

GLVE

Vertical level indicator with double electrical contact

- Used for the control of the fluid for tanks.
- The electrical sensor indicates the attainment of the MIN and MAX level of the fluid. The contacts are normally opened, they close to the attainment of the MIN or MAX level.
- Available with length **variable**, on request of customer, from a minimum of 200 mm to a maximum of 2.000 mm.
- Supplied complete of connectors.
- Electrical characteristics:
  Maximum load on the electrical contacts: AC till 125 Volt – 1,0 A – 10 VA, DC till 100 Volt – 1,0 A – 10 VA.
- For further information please demand the electrical plan. Avoid contacts with **alcohol, trichloroethylene, solvents, petrol and petroleum.**

TYPE	CODE	a	L*	e	q	d	c	f	s	PRICE
GLVE1G	1GLVE10A	3/8"	500	22	30	22	43	10	65	£148.09
GLVE2G	1GLVE20A	3/8"	1000	22	30	22	43	10	65	£166.40
GLVE3G	1GLVE30A	3/8"	1500	22	30	22	43	10	65	£179.06
GLVE4G	1GLVE40A	3/8"	2000	22	30	22	43	10	65	£193.61

* variable data on customer's request (max. 2.000 mm)

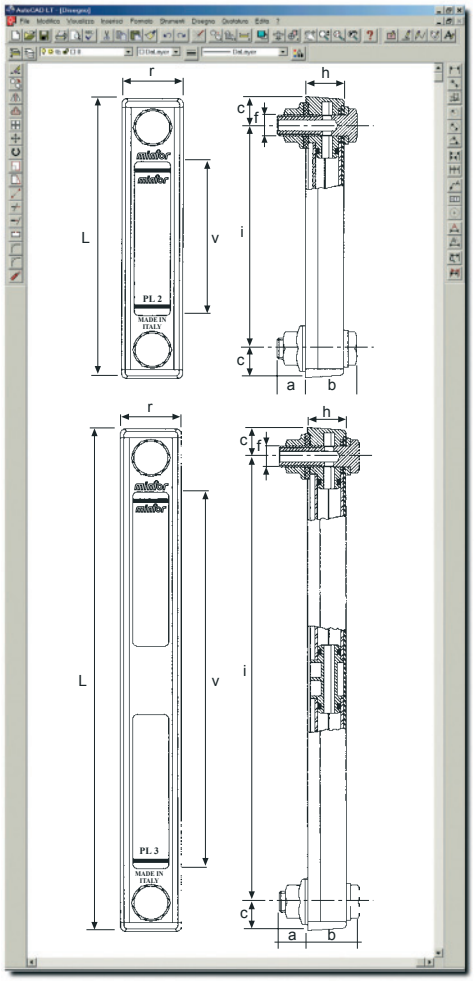

PL

Vertical level indicator

- Used for checking fluid level in large tanks.
- Complete with seals, screws and anchor nuts.
- Easy to assemble, it gives a tolerance of 0,5 mm along the interhole axis, maintaining a perfect seal.
- Avoid contact with **alcohol, toluol and glycol**.

TYPE	CODE	L	r	v	c	i	f	h	a	b	PRICE
PL1	1VPLV10A	109	34	37	16,5	76	M 10	21,5	11	29	£28.23
PL2	1VPLV20A	160	34	88	16,5	127	M 12	21,5	16	29	£33.40
PL3	1VPLV30A	287	34	215	16,5	254	M 12	21,5	16	29	£58.51

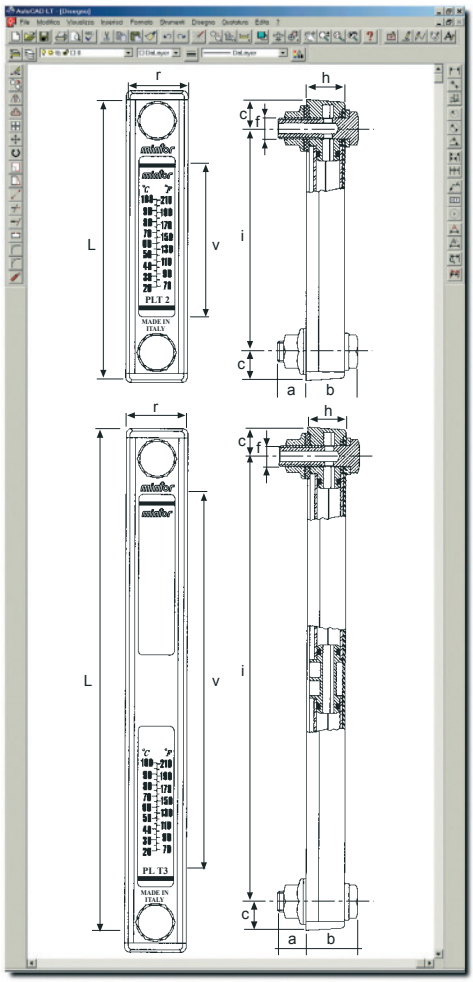

PLT

Vertical level indicator with thermometer

- Used for checking fluid level in large tanks.
- Complete with seals, thermometer, screws and anchor nuts.
- Easy to assemble, it gives a tolerance of 0,5 mm along the interhole axis, maintaining a perfect seal.
- Avoid contact with **alcohol, toluol and glycol**.

TYPE	CODE	L	r	v	c	i	f	h	a	b	PRICE
PLT1	1VPLT10A	109	34	37	16,5	76	M 10	21,5	11	29	£33.16
PLT2	1VPLT20A	160	34	88	16,5	127	M 12	21,5	16	29	£39.27
PLT3	1VPLT30A	287	34	215	16,5	254	M 12	21,5	16	29	£64.41

PLE

Vertical level indicator with electrical contact

- Used for the control of the fluid for tanks.
- The electrical sensor indicates through a visual signal the attainment of the minimal level of the fluid.
- The contacts are normally opened, they close to the attainment of the minimal level.
- Supplied complete of connector and 2,5 mt cable.
- Electrical characteristics:
  Electrical protection: as per norm IP67 - Maximum load on the electrical contacts: AC till 250 Volt - 0,5 Ampère, DC till 250 Volt - 0,5 Ampère. Concurred liquid specific weight: min. 0,80 kg/dm^3.
- For further information pleas demand the electrical plan.
- Avoid contacts with **alcohol, trichloroethylene and solvents.**

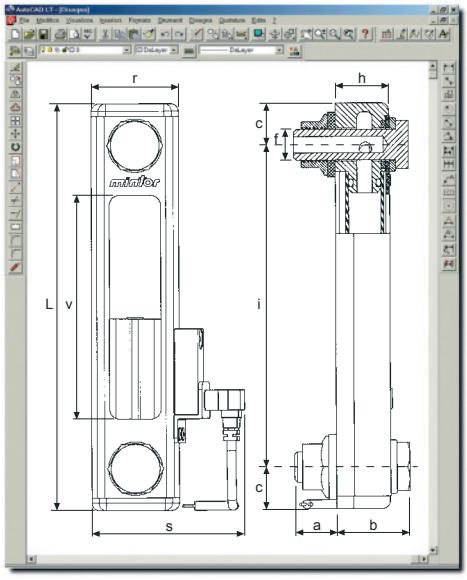

TYPE	CODE	L	r	v	c	i	f	h	a	b	s	PRICE
PLE2	1VPLE20A	160	34	88	16,5	127	M 12	21,5	16	29	59	£132.70
PLE3	1VPLE30A	287	34	215	16,5	254	M 12	21,5	16	29	59	£157.71

50% OFF ALL PRICES

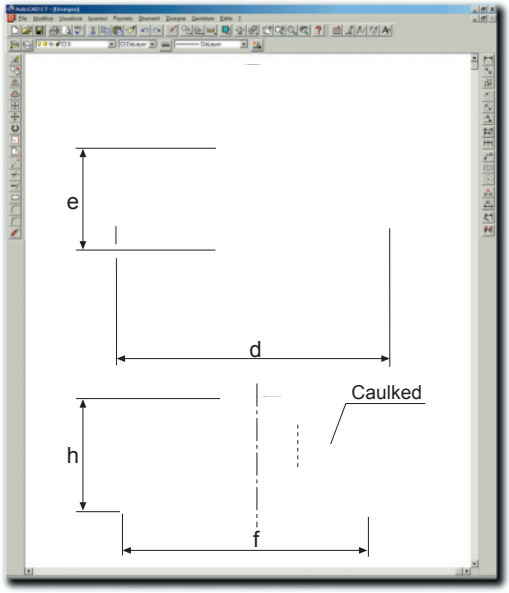

TFES

Female threaded plug with breather

- Aluminium plug with inside thread and breather pipe, complete with gasket, suitable for large tanks.
- Handy grip and possibility of locking with Allen wrench.
- On request, with anodic treatment.

TYPE	CODE	f	d	h	e	PRICE
TFES1M	1MTFE10A	80 x 2	95	40	36	£28.59

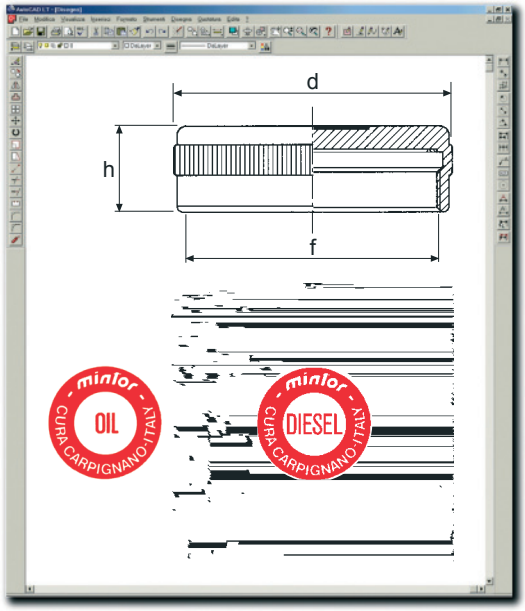

TFE/Z

Female threaded plug

- Plug with internal thread in aluminium alloy for applications on sleeves with male thread.
- Optionally available with different wordings.

TYPE	OIL CODE	DIESEL CODE	f	d	h	PRICE
TFE/Z0G	1WCPA002	1WCPA003	1”	40	20	£11.10
TFE/Z1G	1WCPA102	1WCPA103	1” 1/4	50	20	£16.30
TFE/Z2G	1WCPA202	1WCPA203	1” 1/2	55	20	£16.30
TFE/Z3G	1WCPA302	1WCPA303	2”	65	20	£17.26
TFE/Z4M	1WCPA402	1WCPA403	60 x 2	65	20	£17.26

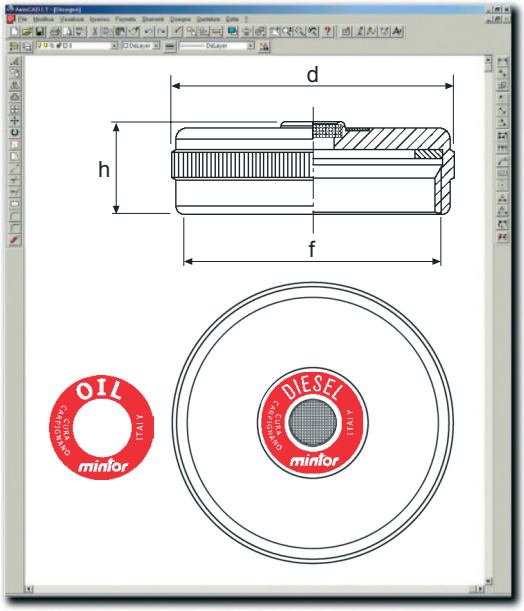

TFES/Z

Female threaded plug with breather

- Plug with internal thread in aluminium alloy for applications on sleeves with male thread.
- The spherical bronze filter of 40 microns built into the plug vents internal pressure and keeps out foreign bodies during the intake stroke.

TYPE	OIL CODE	DIESEL CODE	f	d	h	PRICE
TFES/Z0G	1WFSZ002	1WFSZ003	1"	40	20	£12.56
TFES/Z1G	1WFSZ102	1WFSZ103	1" 1/4	50	22	£13.22
TFES/Z2G	1WFSZ202	1WFSZ203	1" 1/2	55	22	£17.81
TFES/Z3G	1WFSZ302	1WFSZ303	2"	65	22	£18.76
TFES/Z4M	1WFSZ402	1WFSZ403	60 x 2	65	22	£18.76

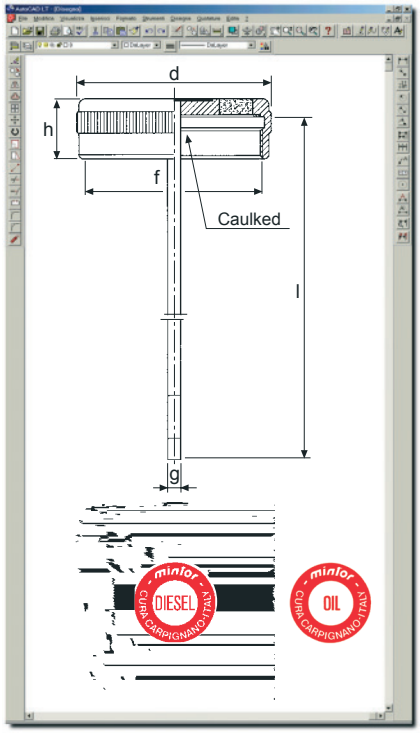

TFES/ZA

Plug with female thread, breather and dipstick

- Plug with internal thread in aluminium alloy for applications on sleeves with male thread.
- The spherical bronze filter of 40 microns built into the plug vents internal pressure and keeps out foreign bodies during the intake stroke.
- Built-in dipstick.
- On request, in different lengths and with minimum and maximum notches.

TYPE	OIL CODE	DIESEL CODE	f	d	h	l	g	PRICE
TFES/ZA0G	1WFZA002	1WFZA003	1"	40	20	200	5	£20.28
TFES/ZA1G	1WFZA102	1WFZA103	1" 1/4	50	20	250	5	£22.20
TFES/ZA2G	1WFZA202	1WFZA203	1" 1/2	55	20	250	5	£22.20
TFES/ZA3G	1WFZA302	1WFZA303	2"	65	20	250	5	£24.02
TFES/ZA4M	1WFZA402	1WFZA403	60 x 2	65	20	250	5	£34.32

50% OFF ALL PRICES

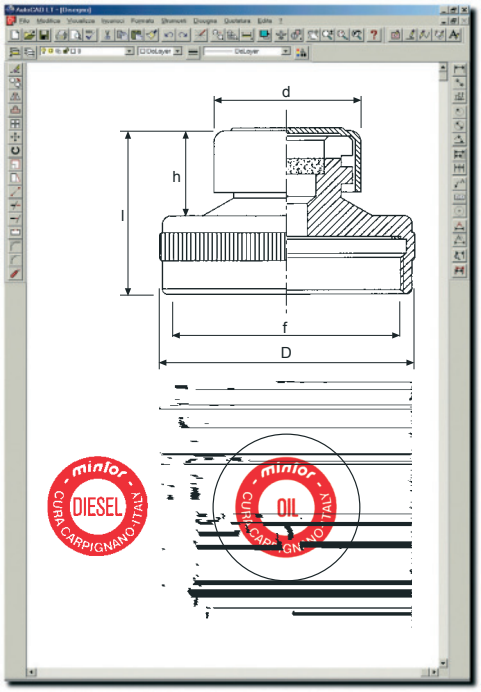

TFES/ZF

Female threaded plug with breather

- Plug with internal thread in aluminium alloy for applications on sleeves with male thread.
- A galvanized-steel cover and a spherical 40 microns bronze filter vent internal pressure and keep out foreign bodies during the intake stroke.
- Especially suitable in dusty environments and for application on **agricultural and building machinery**.

Registered model

TYPE	OIL CODE	DIESEL CODE	f	d	h	l	D	PRICE
TFES/ZF1G	1WCPF101	1WCPF102	1”	30	21	41	40	£20.46
TFES/ZF2G	1WCPF201	1WCPF202	1” ½	38	21	41	55	£26.87
TFES/ZF3G	1WCPF301	1WCPF302	2”	38	21	41	65	£32.53
TFES/ZF4M	1WCPF401	1WCPF402	60 x 2	38	21	41	65	£32.53

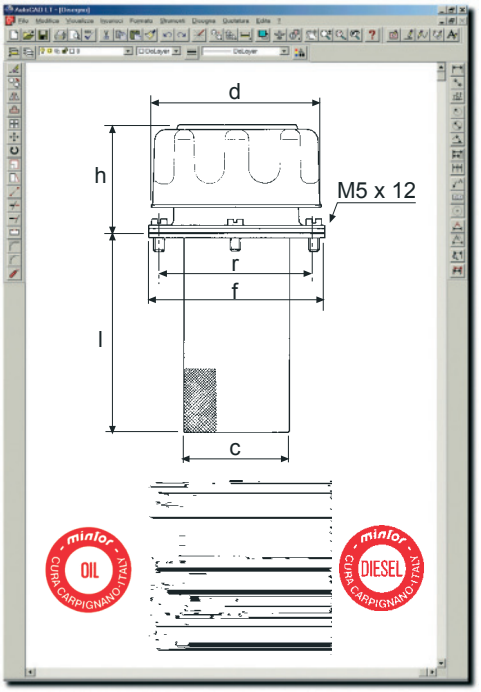

TCAR

Filling plug

- With breather and trap for oil pre-filtering, made entirely of chromed steel with bayonet closure.
- Supplied with screws and seals for immediate use.
- The air filter contained in the plug is available at 10 microns and 40 microns.

TYPE 10 µ			CODE	LT 1’	d	h	l	Ø r	f	c	N. of screws	PRICE
TCAR	1046	C 65	1VTAR10A - Trademark	175	46	45	65	41	52	29	3	£26.92
TCAR	1080	C 80	1VTAR20A - Trademark	500	80	52	80	73	83	50	6	£32.02
TCAR	1080	C150	1VTAR30A - Trademark	500	80	52	150	73	83	50	6	£35.90
TYPE 40 µ			**CODE**	**LT 1’**	**d**	**h**	**l**	**r**	**f**	**c**	**N. of screws**	**PRICE**
TCAR	4046	C 65	1VTAR40A - Trademark	250	46	45	65	41	52	29	3	£23.87
TCAR	4080	C 80	1VTAR50A - Trademark	700	80	52	80	73	83	50	6	£26.48
TCAR	4080	C150	1VTAR60A - Trademark	700	80	52	150	73	83	50	6	£31.64

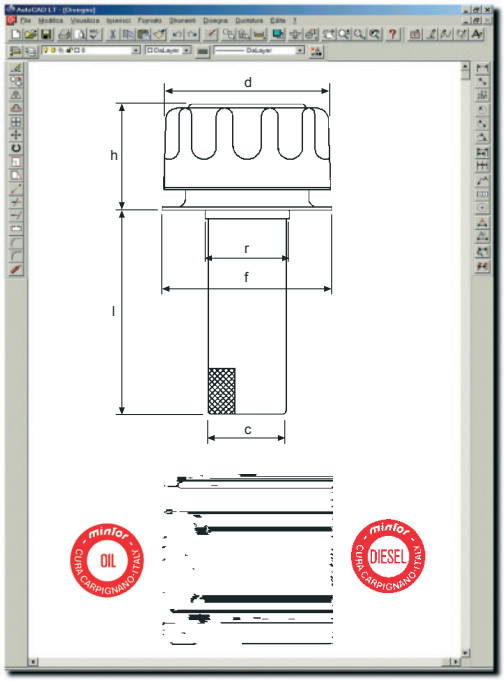

TCARS

Filling plug with flange to be welded

- With breather and trap oil pre-filtering.
- Made entirely of chromed steel with bayonet closure.
- Supplied with flange to be welded on the tank.
- The filter inside the plug is available with 10 or 40 microns.

TYPE 10 µ				CODE	LT 1'	d	h	l	r	f	c	PRICE
TCARS	1080	C 100	Label	1VTAS30A	500	80	52	100	41,5	83	38	£36.46
TCARS	1080	C 100	OIL	1VTAS302	500	80	52	100	41,5	83	38	£36.46
TCARS	1080	C 100	DIESEL	1VTAS303	500	80	52	100	41,5	83	38	£36.46

TYPE 40 µ				CODE	LT 1'	d	h	l	r	f	c	PRICE
TCARS	4080	C 100	Label	1VTAS50A	700	80	52	100	41,5	83	38	£29.38
TCARS	4080	C 100	OIL	1VTAS502	700	80	52	100	41,5	83	38	£29.38
TCARS	4080	C 100	DIESEL	1VTAS503	700	80	52	100	41,5	83	38	£29.38

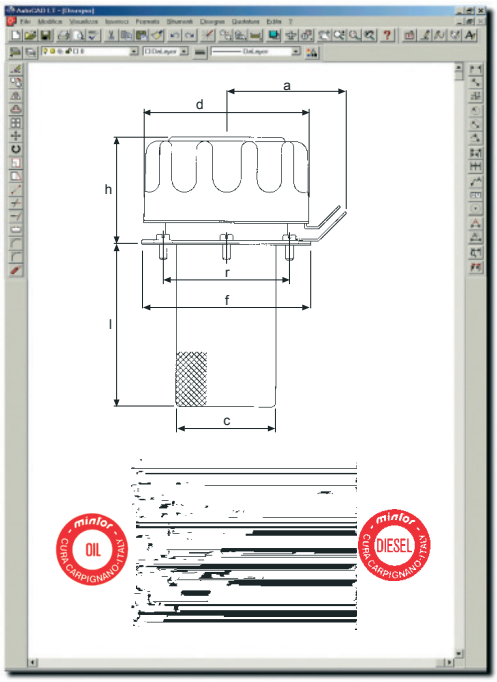

TCAR/LC

Filling plug with lock-holder

- With breather and trap for oil pre-filtering.
- Made entirely of chromed steel with bayonet closure and lock-holder.
- Supplied with slot screws M6 and seals for the fixing.
- The air filter contained in the plug is available at 10 microns and 40 microns.
- On request, provided with lock.

TYPE 10 µ			CODE		LT 1'	d	h	l	r	f	c	a	n. screws	PRICE
TCAR/LC	1080	C 80	1VTLC10A	- Label	500	80	52	80	73	83	50	70	6	£36.41
TCAR/LC	1080	C 150	1VTLC20A	- Label	500	80	52	150	73	83	50	70	6	£41.54

TYPE 40 µ			CODE		LT 1'	d	h	l	r	f	c	a	n. screws	PRICE
TCAR/LC	1080	C 80	1VTLC30A	- Label	700	80	52	80	73	83	50	70	6	£31.42
TCAR/LC	1080	C 150	1VTLC40A	- Label	700	80	52	150	73	83	50	70	6	£36.54

50% OFF ALL PRICES

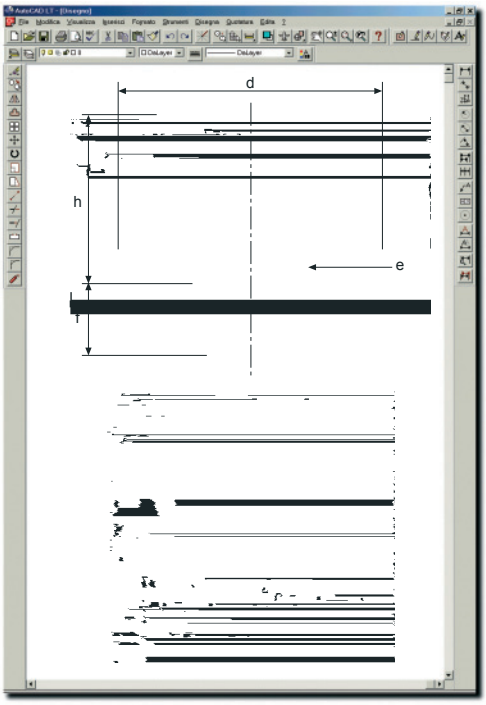

TCARF

Filling plug with threaded mount

- Made entirely of chromed steel with threaded mount and breather.
- The air filter contained in the plug is available at 10 microns and 40 microns.

TYPE 10 µ		GAS	CODE	LT 1'	d	h	f	e	PRICE
TCARF	1046	1/4"	2VTAF60A	175	46	41	10	17	£18.87
TCARF	1046	3/8"	2VTAF70A	175	46	41	12	19	£19.61
TCARF	1046	1/2"	2VTAF80A	175	46	43	14	22	£21.00
TCARF	1080	3/4"	2VTAF90A	500	80	54	17	30	£27.63
TCARF	1080	1"	2VTAF95A	500	80	55	19	36	£39.12

TYPE 40 µ		GAS	CODE	LT 1'	d	h	f	e	PRICE
TCARF	4046	1/4"	2VTAF10A	250	46	41	10	17	£18.12
TCARF	4046	3/8"	2VTAF20A	250	46	41	12	19	£18.83
TCARF	4046	1/2"	2VTAF30A	250	46	43	14	22	£20.20
TCARF	4080	3/4"	2VTAF40A	700	80	54	17	30	£26.85
TCARF	4080	1"	2VTAF50A	700	80	55	19	36	£38.20

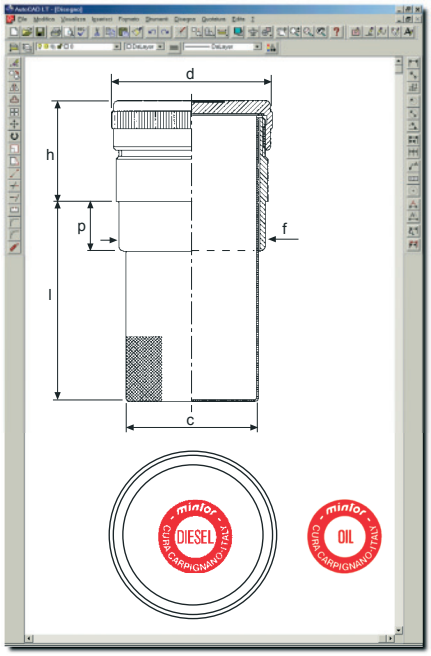

TRBF

Hermetic filling plug

- Composed of aluminium alloy female cover with internal thread.
- It is screwed on UNI C30 burnished steel sleeve which is welded onto the machine tank.
- Complete with extractable steel cartridge which has a filtration degree of 800 microns.

TYPE	OIL CODE	DIESEL CODE	GAS	d	h	p	l	c	f	PRICE
TRBF1G	1SBRF102	1SBRF103	1"	40	35	15	60	25	30	£22.00
TRBF2G	1SBRF202	1SBRF203	1" 1/2	55	37	15	85	40	45	£28.21
TRBF3G	1SBRF302	1SBRF303	2"	65	45	24	85	50	57	£33.14
TYPE	OIL CODE	DIESEL CODE	METRIC	d	h	p	l	c	f	PRICE
TRBF4M	1SBRF402	1SBRF403	60 x 2	65	45	24	85	50	57	£33.14

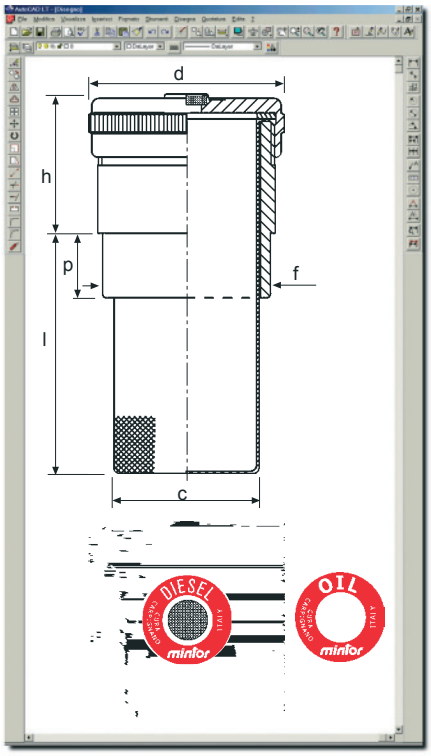

TRBFS

Filling plug with breather

- Composed of aluminium alloy female cover with internal thread, with 40 microns spherical bronze filter.
- It is screwed on UNI C30 burnished steel sleeve which is welded on the machine cover or tank.
- Provided with extractable steel cartridge which has a filtration degree of 800 microns.

TYPE	OIL CODE	DIESEL CODE	GAS	d	h	p	l	c	f	PRICE
TRBFS1G	1SBSF102	1SBSF103	1"	40	35	15	60	25	30	£23.79
TRBFS2G	1SBSF202	1SBSF203	1" 1/2	55	37	15	85	40	45	£30.09
TRBFS3G	1SBSF302	1SBSF303	2"	65	45	24	85	50	57	£35.16

TYPE	OIL CODE	DIESEL CODE	METRIC	d	h	p	l	c	f	PRICE
TRBFS4M	1SBSF402	1SBSF403	60 x 2	65	45	24	85	50	57	£35.16

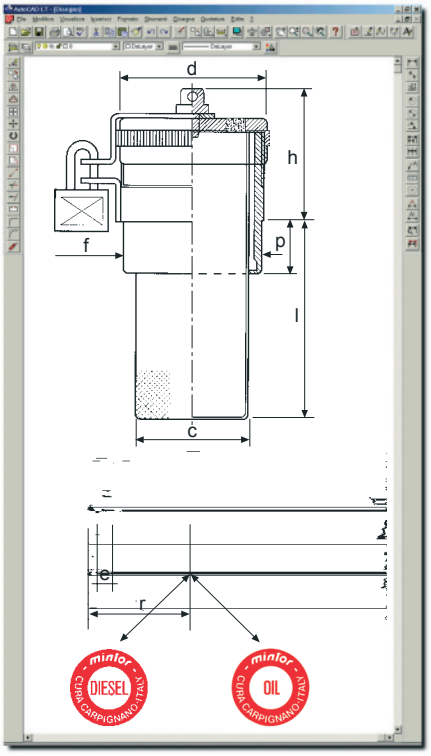

TRBFSC

Filling plug with breather and lock-holder

- Composed of a UNI C30 burnished steel sleeve that is welded on the machine cover or tank.
- Provided with extractable steel cartridge which has a filtration degree of 800 microns.
- Female cover with 40 microns spherical bronze filter and, on request, provided with lock.

TYPE	OIL CODE	DIESEL CODE	GAS	d	h	p	l	c	f	r	e	PRICE
TRBFSC2G	1BRFC201	1BRFC202	1" 1/2	55	51	15	85	40	45	45	6	£53.92
TRBFSC3G	1BRFC301	1BRFC302	2"	65	58	24	85	50	57	50	6	£55.75

TYPE	OIL CODE	DIESEL CODE	METRIC	d	h	p	l	c	f	r	e	PRICE
TRBFSC4M	1BRFC401	1BRFC402	60 x 2	65	58	24	85	50	57	50	6	£55.75

50% OFF ALL PRICES

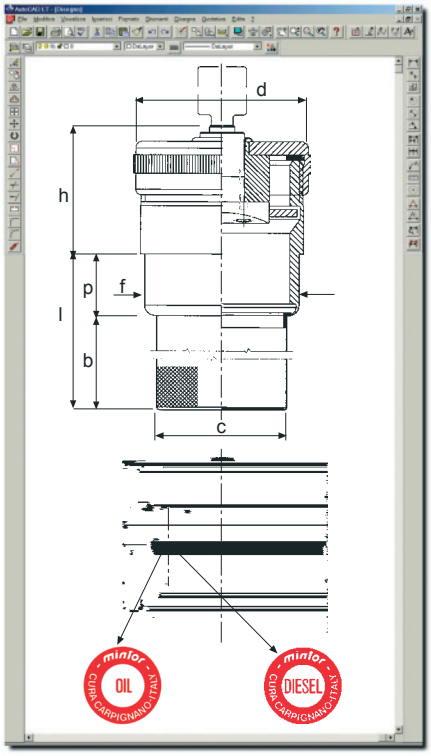

TRBF/ZK

Hermetic filling plug with key lock

- Composed of light alloy female cover with internal thread with key lock.
- It is screwed on UNI C30 burnished steel sleeve which is welded onto the machine tank.
- Complete with extractable steel cartridge which has a filtration degree of 800 microns.

TYPE	OIL CODE	DIESEL CODE	GAS	d	h	f	p	c	b	l	PRICE
TRBF/ZK3G	1KBRF301	1KBRF303	2”	65	48	57	23	49	64	87	£95.72

TYPE	OIL CODE	DIESEL CODE	METRIC	d	h	f	p	c	b	l	PRICE
TRBF/ZK4M	1KBRF401	1KBRF403	60 x 2	65	48	57	23	49	64	87	£95.72

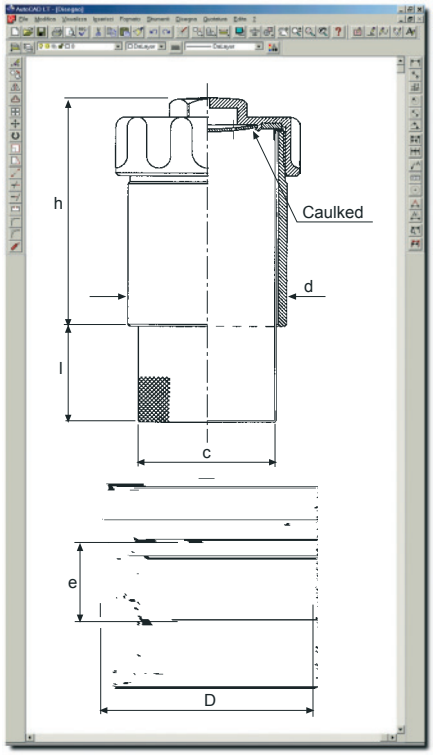

TRBFS/A

Filling plug with breather

- Composed of duraluminium female plug and UNI C30 burnished steel sleeve which can be welded on large size machine cover or tanks.
- It is provided with breather device, with an extractable 800-microns filter cartridge made of steel.
- **On request, supplied with sleeve lenght 50 mm.**

TYPE	CODE	METRIC	d	h	l	c	D	e	PRICE
TRBFS/A2M	1SBSF50A	80 x 2	82	118	49	70	95	36	£69.97

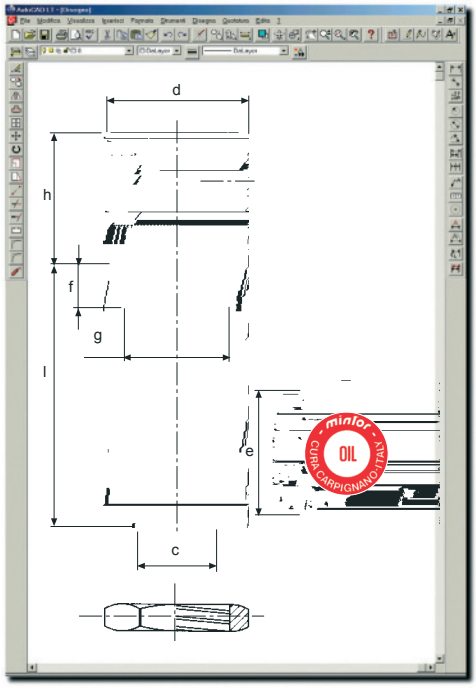

TRTCSF/Z

Breather and filling plug

- Threaded plug with extractable filter cartridge in galvanized-steel.
- The built-in filter has a filtration degree of 40 microns.
- Optionally available with anchor nut for unthreaded hole, suitable for applications on **Hydraulics units, Machine-tools and Earth-moving machinery**.

TYPE	CODE	GAS	d	g	f	h	l	c	e	PRICE
TRTCSF/Z5G	1FSFZ502	1”	45	33,3	14	42	82	25	40	£33.69
TRTCSF/Z8G	1FSFZ802	2”	70	59,4	17	53	113	49	70	£93.60

PLUGS ON INCLINED FLANGE

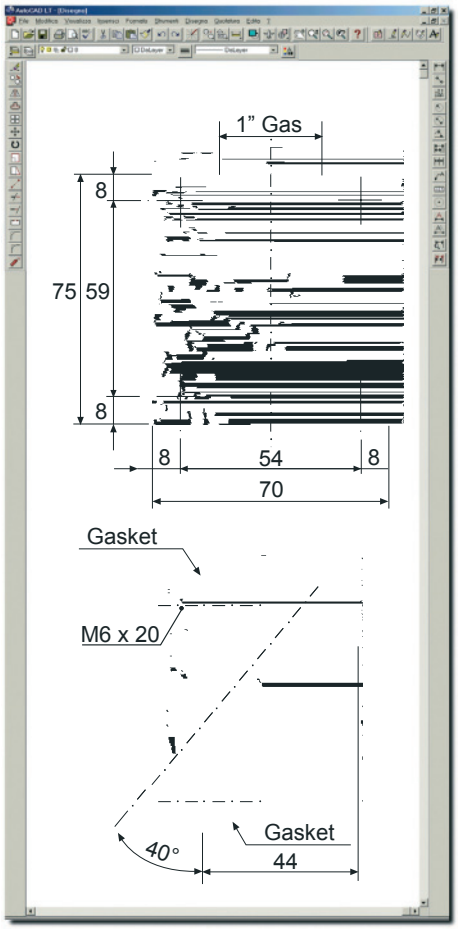

FLGV

Inclined flange for side applications

- Made of aluminium, supplied complete with washers and screws for receiving the different types of filling, filling with breather, breather filling and level dipsticks, etc. see pages 34, 35 and 36.
- For a rapid and economic application till a maximum thickness of 6 mm, it is advisable to conform to the boring jig indicated below.

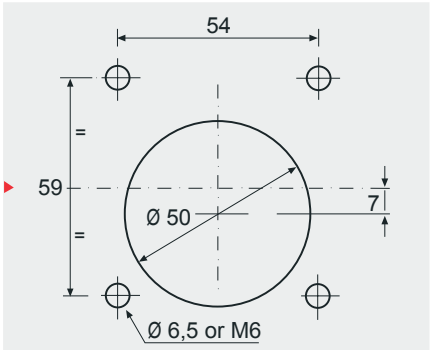

TYPE	CODE	PRICE
FLGV5G	1YFL0003	£24.66

50% OFF ALL PRICES

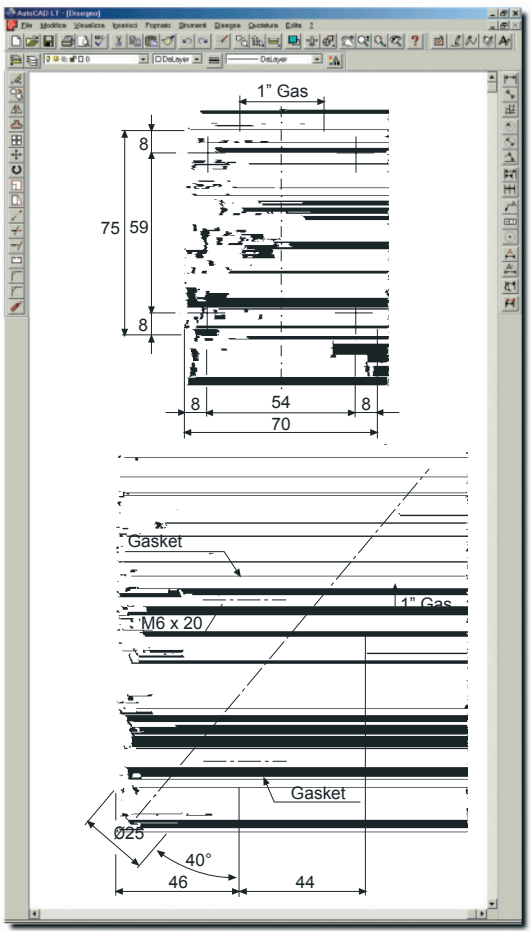

TFSI

Breather plugs on inclined flange

- Alternative breather plugs group are available to apply on inclined flange when it is necessary the side oil filling.

TYPE	CODE	PRICE
TSFI5G	1IGTSF0A	£48.41

TYPE	CODE	PRICE
TCFI5G	1IGTCF0A	£41.40

TYPE	CODE	PRICE
TCSF/ZI5G	1IGSFZ0A	£46.84

TYPE	CODE
TCF/FI5G	1IGF/F0A £41.56

TYPE	CODE	PRICE
TCF/ZI5G	1IGCFZ0A	£43.10

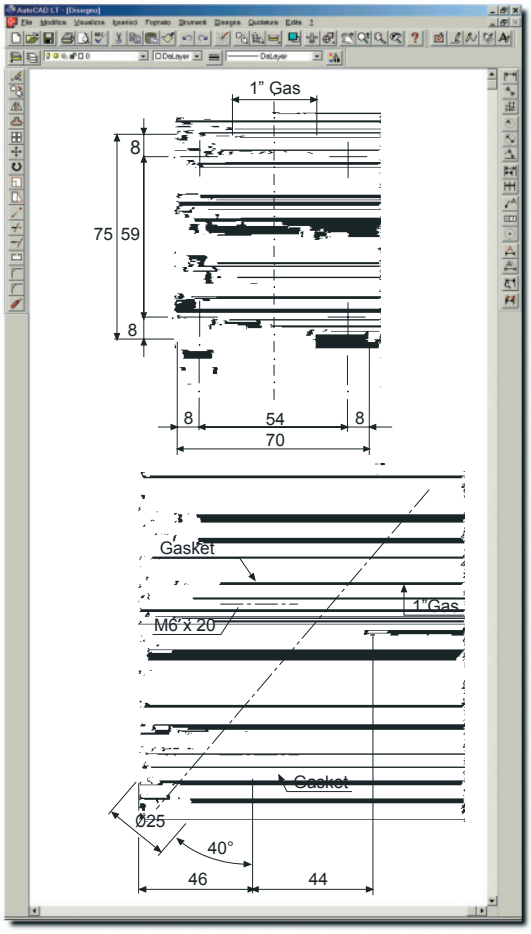

TCI

Filling plugs on inclined flange

- Alternative filling plugs group are available to apply on inclined flange when it is necessary the side oil filling.

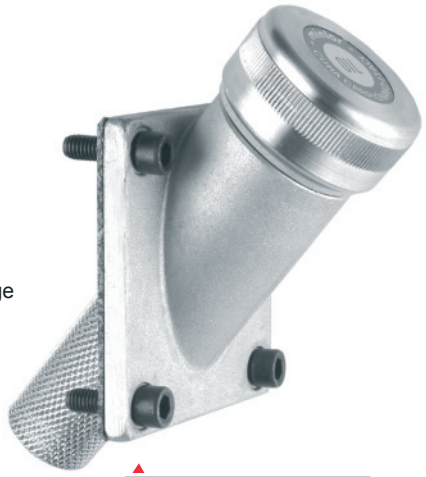

TYPE	CODE	PRICE
TC/ZI5G	1IGCZO0A	£42.36

TYPE	CODE	PRICE
TCI5G	1IGTCO0A	£40.84

TYPE	CODE	PRICE
TC/FI5G	1IGC/F0A	£41.16

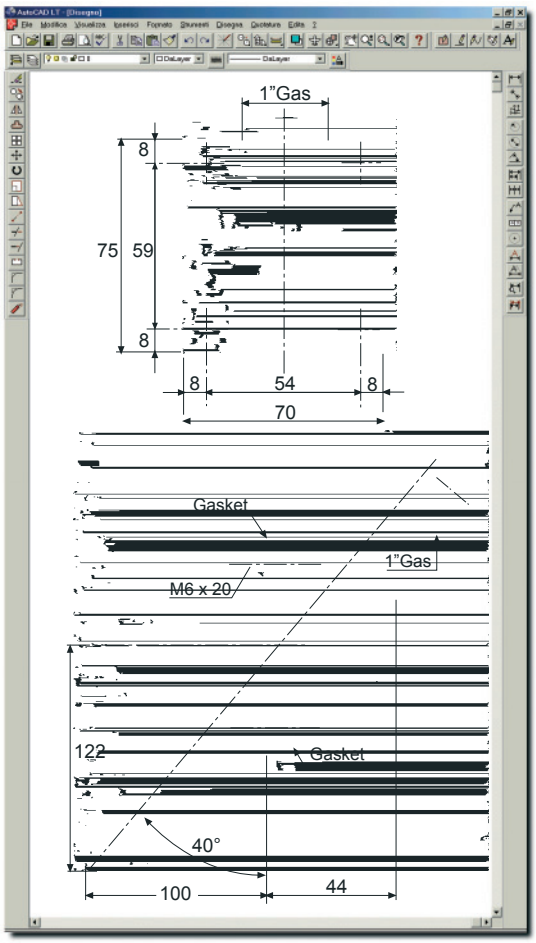

.....I

Filling and breather plugs with level dipstick on inclined flange

- Alternative group of filling and breather plugs with level dipsticks are available to apply on inclined flange when it is necessary the side level and oil filling.

TYPE	CODE	PRICE
TCLSI5G	1IGCSL0A	£36.76

TYPE	CODE	PRICE
TCLAI5G	1IGCLA0A	£39.50
TCLA/ZI5G	1IGLAZ0A	£39.50
TCLS/ZI5G	1IGLSZ0A	£40.13
ILAFI5G	1IGIFA0A	£44.02
LSFI5G	1IGLSF0A	£51.74
FMC/LSI5G	1IGFLS0A	£105.74

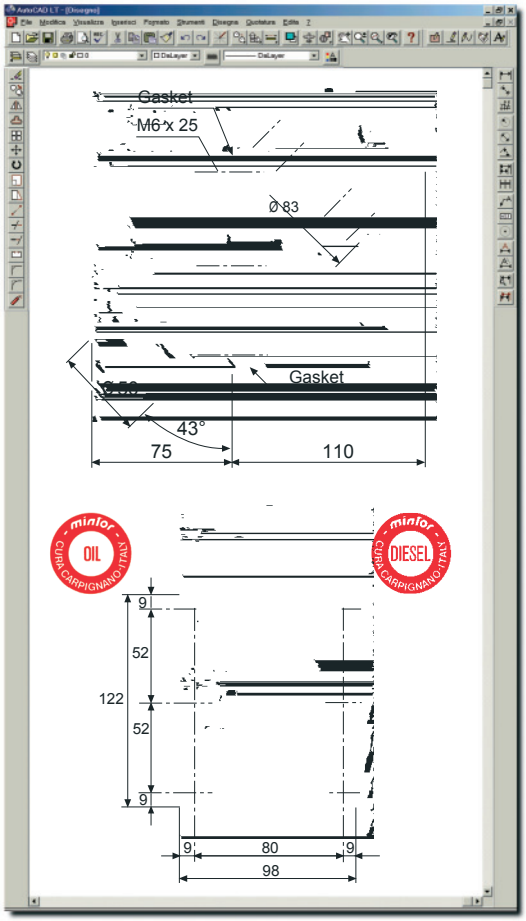

TCARI

Inclined filling plug

- Similar to the TCAR, it is already supplied mounted on an inclined aluminium flange for application to the wall when the space on the tank cover permits no other solution.
- The air filter contained in the plug is available at 10 microns and 40 microns.

TYPE 10 µ			CODE		PRICE
TCARI	1080	C150	1VTIR30A	- Trademark	£84.90

TYPE 40 µ			CODE		PRICE
TCARI	4080	C150	1VTIR60A	- Trademark	£80.43

50% OFF ALL PRICES

STEEL & STAINLESS STEEL OIL TANKS

HYDRAULIC STEEL TANKS.....584
HYDRAULIC STAINLESS STEEL TANKS.....584

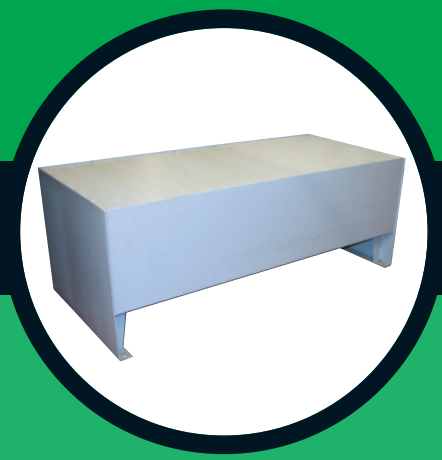

FLOWFIT

HYDRAULIC TANKS

Cost effective HF Range standard hydraulic tanks

FLOWFIT

- Each Tank as standard complete with lids, bolts, gasket and drain plug.
- Standard finish is red oxide

Extras can be added on request:
- Filler breather, site level and bell housing mounting holes.
- Finishes available include colour matching, power coating.

HF SERIES STEEL TANKS

ORDER CODE	CAPACITY LITRES	LENGTH A	WIDTH B	HEIGHT C	THICKNESS (TANK) D	THICKNESS (LID) E	HOLE CTRS M	HEIGHT O	HOLE CTRS Q	WEIGHT KG	PRICE
HF12	14	335	270	235	3	4	208	290	285	16	£150.81
HF16	22	410	325	250	3	4	270	305	364	20	£182.99
HF30	39	470	375	280	3	4	312	335	428	28	£249.80
HF55	58	600	470	310	3	4	401	365	548	38	£332.97
HF75	75	600	470	400	3	4	401	455	548	45	£382.10
HF100	100	675	520	450	3	5	455	505	625	55	£461.62
HF180	165	805	620	500	3	5	555	555	755	70	£618.73

FLOWFIT

SS SERIES 304 STAINLESS STEEL TANK

ORDER CODE	CAPACITY LITRES	LENGTH A	WIDTH B	HEIGHT C	THICKNESS (TANK) D	THICKNESS (LID) E	HOLE CTRS M	HEIGHT O	HOLE CTRS Q	WEIGHT KG	PRICE
SS12	14	335	270	235	3	4	208	290	285	16	£698.84
SS16	22	410	325	250	3	4	270	305	364	20	£767.49
SS30	39	470	375	280	3	4	312	335	428	28	£851.67
SS55	58	600	470	310	3	4	401	365	548	38	£1071.41
SS75	75	600	470	400	3	4	401	455	548	45	£1218.45
SS100	100	675	520	450	3	4	455	505	625	55	£1247.66
SS180	165	805	620	500	3	4	555	555	755	70	£1537.67

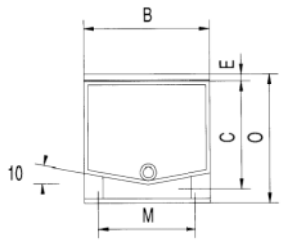

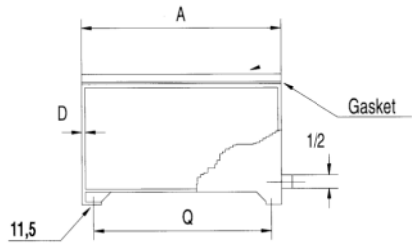

FLOWFIT

TOP QUALITY • TOP OF THE RANGE DIN24339 HEAVY DUTY • HIGH SPECIFICATION TANKS

- 200 – 20,000 Litres Capacity
- Constructed in Steel Plate
- Oil and Rust Proof
- Gasket and Drain Plug Supplied

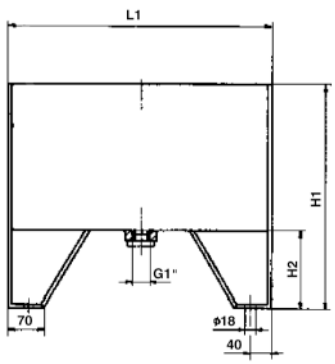

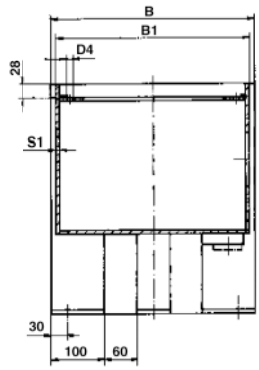

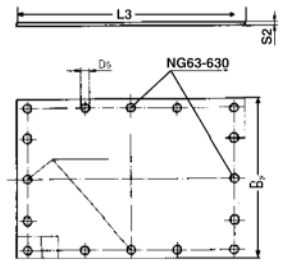

ORDER CODE	CAPACITY LITRES	WEIGHT KG	L1	A	B1	H1	H2	D4	S1	L3	B2	D5	S2	PRICE
HFSS200	200	98	900	654	640	560	150	M10	4	888	628	12	6	£852.57
HFSS250	250	110	1010	704	690	580	150	M10	4	998	678	12	7	£1159.45
HFSS300	300	150	1150	714	700	580	150	M10	4	1138	688	12	7	£1384.61
HFSS400	400	190	1514	749	735	580	150	M10	4	1500	720	14	8	£2149.84
HFSS630	630	285	1514	959	945	770	250	M10	4	1500	930	14	10	£2601.36
HFSS800	800	350	2014	914	900	770	250	M12	5	2000	880	14	10	£3051.31
HFSS1000	1000	420	2014	1079	1065	800	250	M12	5	2000	1045	14	10	£4173.10
HFSS1250	1250	540	2014	1349	1335	800	250	M12	5	2000	1315	14	10	£4253.64
HFSS1500	1500	650	2014	1444	1430	850	250	M12	5	2000	1410	18	10	£3961.54
HFSS2000	2000	800	2314	1564	1550	900	250	M12	6	2296	1528	18	10	£5115.67

50% OFF ALL PRICES

ALUMINIUM OIL TANKS

14L, 22L & 39L CAPACITY HYDRAULIC OIL TANK WITH TANK ACCESSORIES 593
58L & 75L CAPACITY HYDRAULIC OIL TANK WITH TANK ACCESSORIES 594
100L CAPACITY HYDRAULIC OIL TANK WITH TANK ACCESSORIES.....595
165L CAPACITY HYDRAULIC OIL TANK WITH TANK ACCESSORIES.....595

FLOWFIT

ALUMINIUM-ÖLBEHÄLTER AB 3,5 — ALUMINIUM OIL TANKS AB 3,5

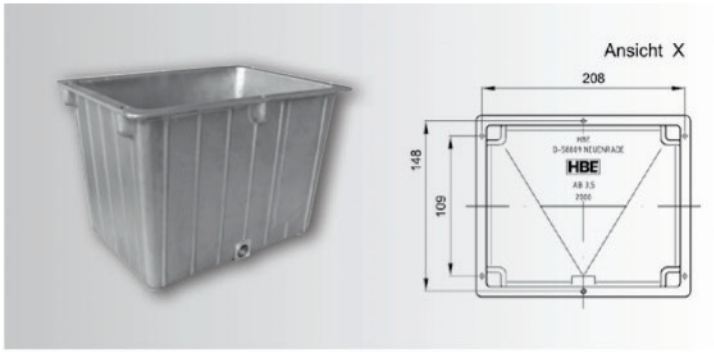

ART.-NR. PART NO.	BESTELL-BEZEICHNUNG ORDERING CODE	PRODUKTBESCHREIBUNG	DESCRIPTION	£ LIST
AT2000	AB 3,5	**Behälter** Nutzvolumen ca. 3 L · Gewicht 1,0 kg · stapelbar	**Tank** Effective capacity approx. 3 L · weight 1,0 kg · stackable	£83.91
AT2200	SD 3,5	**Stahldeckel** gebohrt zur Montage am Behälter, sonst unbearbeitet, unlackiert oder komplett bearbeitet nach Kundenzeichnung	**Steel lid** machined for mounting on the tank, otherwise unmachined, unprimed or completely machined acc. to customer's drawing	£23.38
AT2230	D 3,5A	**Flach-Dichtung** (Pappe)	**Gasket** (paperboard)	£2.29
AT2238	D 3,5GK	**Flach-Dichtung** (Gummikork)	**Gasket** (rubber cork)	£7.80
AT2260	AS G 1/4"	**Ablassschraube**	**Drain plug**	£2.75
AT2261	G 1/4"	**CU-Dichtung** (14 x 18 x 1,5)*	**CU-Gasket** (14 x 18 x 1,5)*	£0.90
FT5C40	FT5C401	**Einfüller** (Metall)*	**Filler** (metal) 3 hole fixing	£12.83
FL1M12	FL1M12	**Ölstandsanzeiger***	**Oil gauge*** 76mm x M12	£12.71

ALUMINIUM-ÖLBEHÄLTER AB 6,5 — ALUMINIUM OIL TANKS AB 6,5

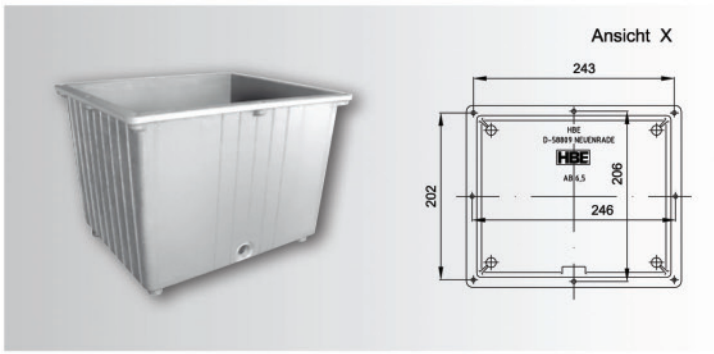

ART.-NR. PART NO.	BESTELL-BEZEICHNUNG ORDERING CODE	PRODUKTBESCHREIBUNG	DESCRIPTION	£ LIST
AT2005	AB 6,5	**Behälter** Nutzvolumen ca. 6 L · Gewicht 1,6 kg · stapelbar	**Tank** Effective capacity approx. 6 L · weight 1,6 kg · stackable	£91.66
AT2205	SD 6,5	**Stahldeckel** gebohrt zur Montage am Behälter, sonst unbearbeitet, unlackiert oder komplett bearbeitet nach Kundenzeichnung	**Steel lid** machined for mounting on the tank, otherwise unmachined, unprimed or completely machined acc. to customer's drawing	£27.51
AT2239	D 6,5A	**Flach-Dichtung** (Pappe)	**Gasket** (paperboard)	£2.75
AT2246	D 6,5GK	**Flach-Dichtung** (Gummikork)	**Gasket** (rubber cork)	£8.26
AT2262	AS G 3/8"	**Ablassschraube**	**Drain plug**	£4.59
AT2267	G 3/8"	**CU-Dichtung** (16 x 22 x 2)	**CU-Gasket** (16 x 22 x 2)	£0.90
FT5C40	FT5C401	**Einfüller** (Metall)*	**Filler** (metal) 3 hole fixing	£12.83
FL1M12	FL1M12	**Ölstandsanzeiger***	**Oil gauge*** 76mm x M12	£12.71
FL2M12	FL2M12	**Ölstandsanzeiger***	**Oil gauge*** 127mm x M12	£17.48

ALUMINIUM-ÖLBEHÄLTER AB 12 NR — ALUMINIUM OIL TANKS AB 12 NR

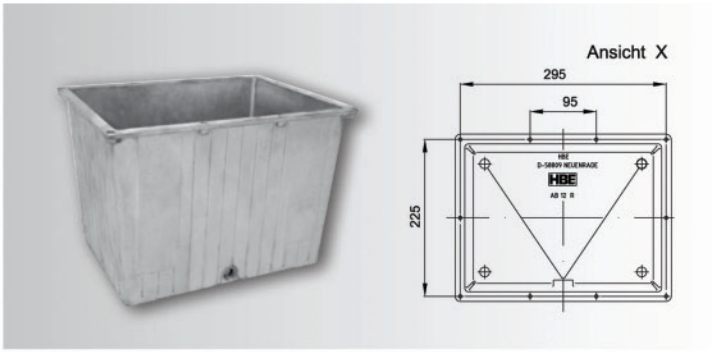

ART.-NR. PART NO.	BESTELL-BEZEICHNUNG ORDERING CODE	PRODUKTBESCHREIBUNG	DESCRIPTION	£ LIST
AT2007	AB 12 NR	**Behälter** Nutzvolumen ca. 11 L · Gewicht 3 kg · stapelbar	**Tank** Effective capacity approx. 11 L · weight 3 kg · stackable	£111.43
AT2216	SD 12 NR	**Stahldeckel** gebohrt zur Montage am Behälter, sonst unbearbeitet, unlackiert oder komplett bearbeitet nach Kundenzeichnung	**Steel lid** machined for mounting on the tank, otherwise unmachined, unprimed or completely machined acc. to customer's drawing	£38.52
AT2236	D 12A NR	**Flach-Dichtung** (Pappe)	**Gasket** (paperboard)	£3.67
AT2240	D 12GK NR	**Flach-Dichtung** (Gummikork)	**Gasket** (rubber cork)	£9.62
AT2262	AS G 3/8"	**Ablassschraube**	**Drain plug**	£4.59
AT2267	G 3/8"	**CU-Dichtung** (16 x 22 x 2)	**CU-Gasket** (16 x 22 x 2)	£0.90
FT5C40	FT5C401	**Einfüller** (Metall)*	**Filler** (metal)* 3 hole fixing	£12.83
FL1M12	FL1M12	**Ölstandsanzeiger***	**Oil gauge*** 76mm x M12	£12.71
FL2M12	FL2M12	**Ölstandsanzeiger***	**Oil gauge*** 127mm x M12	£17.74

ALUMINIUM-ÖLBEHÄLTER AB 20 — ALUMINIUM OIL TANKS AB 20

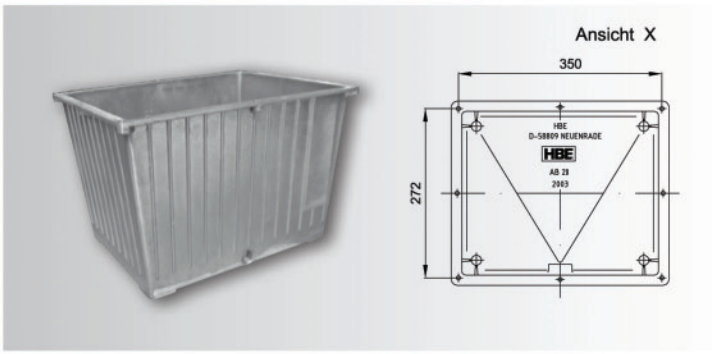

ART.-NR. PART NO.	BESTELL-BEZEICHNUNG ORDERING CODE	PRODUKTBESCHREIBUNG	DESCRIPTION	£ LIST
AT2003	AB 20	**Behälter** Nutzvolumen ca. 17 L · Gewicht 4,4 kg · stapelbar	**Tank** Effective capacity approx. 17 L · weight 4,4 kg · stackable	£172.42
AT2203	SD 20	**Stahldeckel** gebohrt zur Montage am Behälter, sonst unbearbeitet, unlackiert oder komplett bearbeitet nach Kundenzeichnung	**Steel lid** machined for mounting on the tank, otherwise unmachined, unprimed or completely machined acc. to customer's drawing	£44.48
AT2233	D 20 A	**Flach-Dichtung** (Pappe)	**Gasket** (paperboard)	£4.12
AT2245	D 20 GK	**Flach-Dichtung** (Gummikork)	**Gasket** (rubber cork)	£11.90
AT2263	AS G 1/2"	**Ablassschraube**	**Drain plug**	£5.96
AT2268	G 1/2"	**CU-Dichtung** (21 x 26 x 1,5)	**CU-Gasket** (21 x 26 x 1,5)	£1.37
FT5C40	FT5C401	**Einfüller** (Metall)*	**Filler** (metal)* 3 hole fixing	£12.83
FL1M12	FL1M12	**Ölstandsanzeiger***	**Oil gauge*** 76mm x M12	£12.71
FL2M12	FL2M12	**Ölstandsanzeiger***	**Oil gauge*** 127mm x M12	£17.48

*Zubehörteile entnehmen Sie bitte dem Gesamtkatalog *Accessories: please see our catalogue

ALUMINIUM-ÖLBEHÄLTER AB 30 NR — ALUMINIUM OIL TANKS AB 30 NR

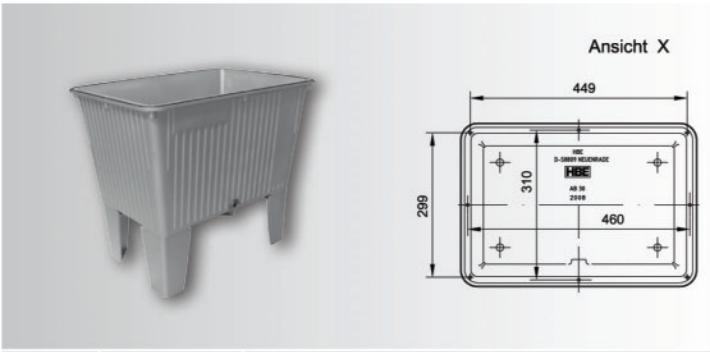

ART.-NR. PART NO.	BESTELL-BEZEICHNUNG ORDERING CODE	PRODUKTBESCHREIBUNG	DESCRIPTION	£ LIST
AT2008	AB 30 NR	**Behälter** Nutzvolumen ca. 26 L · Gewicht 7 kg · stapelbar	**Tank** Effective capacity approx. 26 L · weight 7 kg · stackable	£183.43
AT2204	SD 30	**Stahldeckel** gebohrt zur Montage am Behälter, sonst unbearbeitet, unlackiert oder komplett bearbeitet nach Kundenzeichnung	**Steel lid** machined for mounting on the tank, otherwise unmachined, unprimed or completely machined acc. to customer's drawing	£62.36
AT2210	AD 30	**Aluminiumdeckel** gebohrt zur Montage am Behälter, sonst unbearbeitet, unlackiert oder komplett bearbeitet nach Kundenzeichnung	**Aluminium lid** machined for mounting on the tank, otherwise unmachined, unprimed or completely machined acc. to customer's drawing	£102.00
AT2234	D 30 NBR	**Rundschnurdichtung** ø 6 mm NBR	**Gasket** ø 6 mm NBR	£11.91
AT2263	AS G ½"	**Ablassschraube**	**Drain plug**	£5.96
AT2268	G ½"	**CU-Dichtung** (21 x 26 x 1,5)	**CU-Gasket** (21 x 26 x 1,5)	£1.37
AT2300	F 30	**Aluminiumfüße für AB 30** (Satz=4 Stück)	**Aluminium feet for AB 30** (Set=4 pcs.)	£17.29
FT8C401	FT8C40	**Einfüller** (Metall)*	**Filler** (metal)* 6 hole fixing	£15.59
FL1M12	FL1M12	**Ölstandsanzeiger***	**Oil gauge*** 76mm x M12	£12.71
FL2M12	FL2M12	**Ölstandsanzeiger***	**Oil gauge*** 127mm x M12	£17.48

ALUMINIUM-ÖLBEHÄLTER AB 44 — ALUMINIUM OIL TANKS AB 44

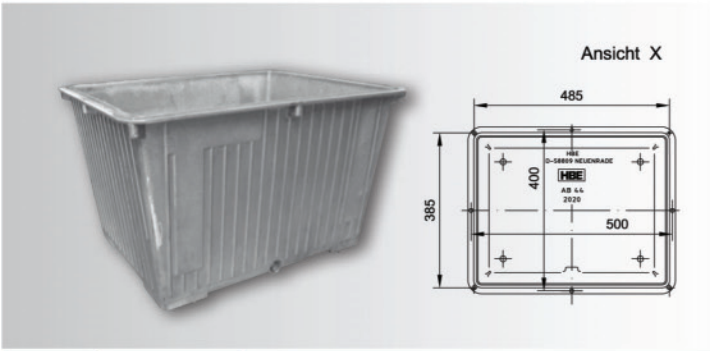

ART.-NR. PART NO.	BESTELL-BEZEICHNUNG ORDERING CODE	PRODUKTBESCHREIBUNG	DESCRIPTION	£ LIST
AT 2020	AB 44	**Behälter** Nutzvolumen ca. 40 L · Gewicht 10 kg · stapelbar	**Tank** Effective capacity approx. 40 L · weight 10 kg · stackable	£326.96
AT 2221	SD 44	**Stahldeckel** gebohrt zur Montage am Behälter, sonst unbearbeitet, unlackiert oder komplett bearbeitet nach Kundenzeichnung	**Steel lid** machined for mounting on the tank, otherwise unmachined, unprimed or completely machined acc. to customer's drawing	£86.20
AT 2241	D 44 NBR	**Rundschnurdichtung** ø 6 mm NBR	**Gasket** ø 6 mm NBR	£12.37
AT 2263	AS G ½"	**Ablassschraube**	**Drain plug**	£5.96
AT 2268	G ½"	**CU-Dichtung** (21 x 26 x 2,5)	**CU-Gasket** (21 x 26 x 2,5)	£1.37
AT 2300	F 44	**Aluminiumfüße für AB 44** (Satz=4 Stück)	**Aluminium feet for AB 44** (Set=4 pcs.)	£31.63
FT8C401	FT8C40	**Einfüller** (Metall)*	**Filler** (metal)* 6 hole fixing	£15.59
FL1M12	FL1M12	**Ölstandsanzeiger***	**Oil gauge*** 76mm x M12	£12.71
FL2M12	FL2M12	**Ölstandsanzeiger***	**Oil gauge*** 127mm x M12	£17.48
FL3M12	FL3M12	**Ölstandsanzeiger***	**Oil gauge*** 254mm x M12	£34.75
2384	LR 150	**Lenkrollen** 150 mm*	**Castors** 150 mm*	

*Zubehörteile entnehmen Sie bitte dem Gesamtkatalog — Accessories: please see our catalogue

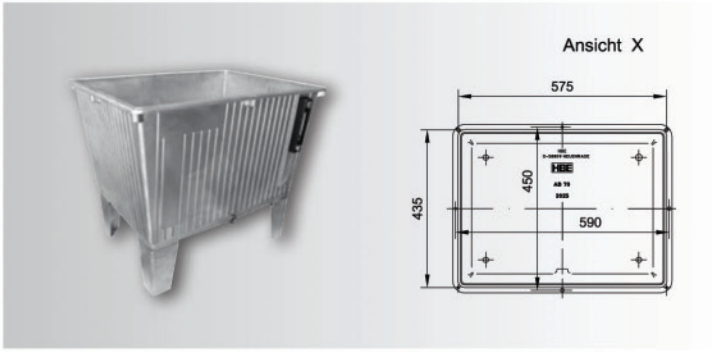

ART.-NR. PART NO.	BESTELL-BEZEICHNUNG ORDERING CODE	PRODUKTBESCHREIBUNG	DESCRIPTION	£ LIST
AT2025	AB 70	**Behälter** Nutzvolumen ca. 63 L · Gewicht 12 kg · stapelbar	**Tank** Effective capacity approx. 63 L · weight 12 kg · stackable	£426.01
AT2225	SD 70	**Stahldeckel** gebohrt zur Montage am Behälter, sonst unbearbeitet, unlackiert oder komplett bearbeitet nach Kundenzeichnung	**Steel lid** machined for mounting on the tank, otherwise unmachined, unprimed or completely machined acc. to customer's drawing	£91.05
AT2242	D 70 NBR	**Rundschnurdichtung** ø 6 mm NBR 70° Shore	**Gasket** ø 6 mm NBR 70° Shore	£13.29
AT2263	AS G ½"	**Ablassschraube**	**Drain plug**	£5.96
AT2268	G ½"	**CU-Dichtung** (21 x 26 x 2,5)	**CU-Gasket** (21 x 26 x 2,5)	£1.37
AT2300	F 70	**Aluminiumfüße für AB 70** (Satz=4 Stück)	**Aluminium feet for AB 70** (Set=4 pcs.)	£31.63
FT8C401	FT8C40	**Einfüller** (Metall)*	**Filler** (metal)* 6 hole fixing	£15.59
FL1M12	FL1M12	**Ölstandsanzeiger***	**Oil gauge*** 76mm x M12	£12.71
FL2M12	FL2M12	**Ölstandsanzeiger***	**Oil gauge*** 127mm x M12	£17.48
FL3M12	FL3M12	**Ölstandsanzeiger***	**Oil gauge*** 254mm x M12	£34.75
2384	LR 150	**Lenkrollen** 150 mm*	**Castors** 150 mm*	

*Zubehörteile entnehmen Sie bitte dem Gesamtkatalog *Accessories: please see our catalogue

AB 70 STAPELBAR
AB 70 STACKABLE

AB 44 MIT DECKELBEARBEITUNG NACH KUNDENZEICHNUNG
AB 44 WITH LID MACHINING ACC. TO CUSTOMER'S DRAWING

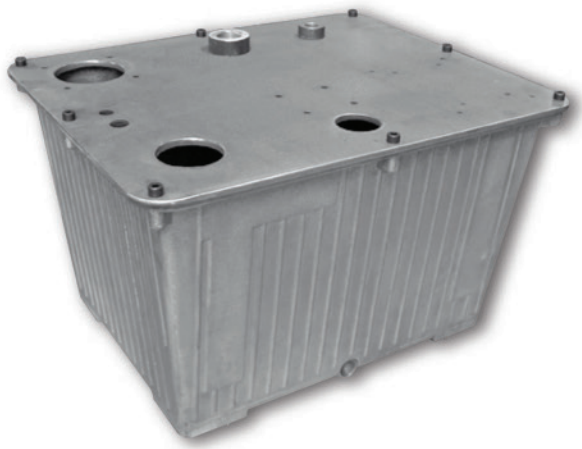

ÖLWANNEN FÜR ALUMINIUM-BEHÄLTER
OIL SUMPS FOR ALUMINIUM TANKS

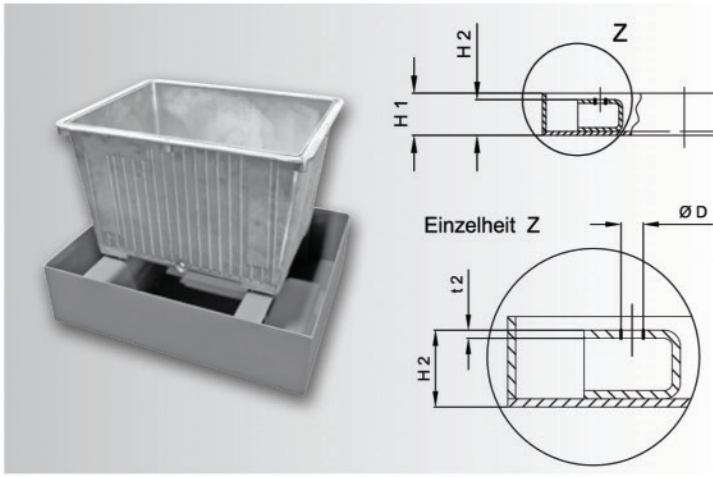

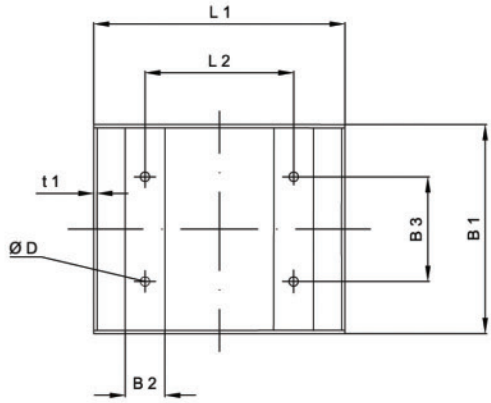

ART.-NR. PART NO.	TYP TYPE	FÜR FOR	VOLUMEN VOLUME	ABMESSUNGEN (mm) DIMENSIONS (mm)										£ LIST
				L_1	L_2	B_1	B_2	B_3	H_1	H_2	t_1	t_2	D	
OSAT1080	ÖW 12 ST	AB 12 NR	11,8 L	380	225	310	60	155	110	100	3	3	9,5	**£588.34**
OSAT1081	ÖW 20 ST	AB 20	20 L	570	270	350	60	192	110	100	3	3	9,5	**£598.44**
OSAT1082	ÖW 30 ST	AB 30 NR	33 L	550	326	400	60	176	160	150	3	5	12	**£624.58**
OSAT1083	ÖW 44 ST	AB 44	45 L	600	341	500	60	241	160	150	3	5	12	**£756.18**
OSAT1084	ÖW 70 ST	AB 70	63,5 L	730	422,5	580	60	282,5	160	150	3	5	12	**£791.05**

ÖW 12 – ÖW 70

- Ölwannen für Aluminium-Behälter AB 12 – AB 70
- Werkstoff ST 37 (alt. V2A / V4A)
- ST 37 sandgestrahlt und ölbeständig (Mineralöl HL / HLP) grundiert
- Zugelassener Schweißfachbetrieb nach § 19.1 des Wasserhaushaltsgesetzes (WHG)

ÖW 12 – ÖW 70

- Oil sumps for aluminium tanks AB 12 – AB 70
- Material ST 37 (alt. V2A/V4A)
- ST 37 sandblasted and grounded regarding oil resistance (mineral oil HL/HLP)
- Approved welding shop acc. to § 19.1 (WHG)

ALLGEMEINE TECHNISCHE INFORMATIONEN
GENERAL TECHNICAL INFORMATION

- Die Aluminium-Behälter sind in allen Größen stapelbar, daher niedrige Frachtkosten und Platz sparende Lagerhaltung
- Stabiler Gusskörper mit guter Wärmeabstrahlung durch Werkstoff Aluminium und umlaufende Verrippung
- AB 30 – AB 70 alternativ mit Füßen oder Lenkrollen lieferbar
- Flachdichtung aus Gummikork zwischen Tankdeckel und Behälter für AB 3,5 – AB 20
- Rundschnurdichtung (endlos, ohne Klebestelle) 6 mm ø NBR für AB 30 – AB 70
- Tankdeckel für alle Größen montagefertig bearbeitet nach Kundenzeichnung (wahlweise inkl. Lackierung) kurzfristig lieferbar
- Alle Behältergrößen inkl. Standardzubehör ab Lager

- All aluminium tank sizes are stackable, thus low freight cost and space saving storage
- Stable casted body with good heat dissipation by material aluminium and all-round fluting
- AB 30 – AB 70 available with feet or castors alternatively
- Flat gasket made of rubber cork between tank lid and tank for AB 3,5 – AB 20
- Toroidal sealing ring (endless, without contact spot) 6 mm ø NBR for AB 30 – AB 70
- Tank lid for all sizes according to customer's drawing (coating included, if desired)
- All tank sizes incl. standard accessories ex stock

BESTÄNDIGKEITSTABELLE gegen Mineralöle und schwer entflammbare Flüssigkeiten
LIST OF RESISTANCE Against mineral oils and flame resistant fluids

PRODUKT PRODUCT	MATERIAL MATERIAL	MEDIUM MEDIUM					
		Hydrauliköl / Mineralölbasis Hydraulic oil / Mineral oil base	HFA	HFB	HFC	HFD, HFD–R, HFD–S, HFD–T	
Stahlbehälter / Steel tanks	Stahl / Steel	●	1	●	●	●	
Anstrich / Coating	ME III	●	●	○	2	2	
Dichtung / Gasket	NBR	●	●	●	●	○	
Dichtung / Gasket	EPDM	○	○	○	◎	◎	
AB-Behälter / AB-tanks	Aluminium	●	●	●	●	●	
Dichtung / Gasket	Pappe / Paperboard	●	●	●	○	○	
Dichtung / Gasket	Gummikork / Rubber cork	●	●	●	3	3	
Deckel SD / Lid SD	Stahl / Steel	●	1	●	●	●	
Schaugläser / Oil gauges							
mit Dichtung / with gasket	NBR	●	●	●	●	○	
mit Dichtung / with gasket	FPM	○	●	●	○	●	
Einfüller / Filler	ST	●	●	●	●	○	
Reingungsdeckel / Cleaning cover	Aluminium	●	●	●	●	●	
mit Dichtung / with gasket	NBR	●	●	●	●	○	
mit Dichtung / with gasket	FPM	○	○	●	○	●	
mit Dichtung / with gasket	EPDM	○	●	○	●	●	

● = beständig ○ = nicht beständig 1 = Grundierung erforderlich 2 = Wenn Anstrich erwünscht, Epoxydharz verwenden 3 = Gegen Ölbenetzung beständig
● = resistant ○ = nonresistant 1 = Priming coat required 2 = If coating required, epoxyd-rosin is to be used 3 = Resistant to moisture by oil

HYRAULIKFLÜSSIGKEITEN / ZUSAMMENSETZUNG

- **HFA** Öl in Wasser-Emulsion, Wassergehalt > 80%
- **HFB** Wasser in Öl-Emulsion, Wassergehalt > 40%
- **HFC** Wässrige Polymer-Lösung (Wasserglykol) Wassergehalt > 45%
- **HFD** Synthetische Flüssigkeiten (wasserfrei)
- **HFD–R** Phosphorsäure-Ester
- **HFD–S** Chlorierte Kohlenwasserstoffe
- **HFD–T** Mischung aus HFD–R + HFD–S

HYDRAULIC FLUIDS / MAIN COMPONENTS

- **HFA** Oil in water emulsion, water content > 80 per cent
- **HFB** Water in oil emulsion, water content > 40 per cent
- **HFC** Watery Polymer-solution (waterglycol) water content > 45 per cent
- **HFD** Synthetic fluids (free of water)
- **HFD–R** Phosphoric acid ester
- **HFD–S** Chlorinated hydrocarbon
- **HFD–T** Mixture of HFD–R + HFD–S

HYDRAULIC TANKS COMPLETE WITH ACCESSORIES

14L CAPACITY HYDRAULIC OIL TANK WITH TANK ACCESSORIES.....593
22L CAPACITY HYDRAULIC OIL TANK WITH TANK ACCESSORIES.....593
39L CAPACITY HYDRAULIC OIL TANK WITH TANK ACCESSORIES.....593
58L CAPACITY HYDRAULIC OIL TANK WITH TANK ACCESSORIES.....594
75L CAPACITY HYDRAULIC OIL TANK WITH TANK ACCESSORIES.....594
100L CAPACITY HYDRAULIC OIL TANK WITH TANK ACCESSORIES.....594
165L CAPACITY HYDRAULIC OIL TANK WITH TANK ACCESSORIES.....595

The Flowfit range of hydraulic tanks complete with accessories consists of a hydraulic tank, return line filter, level indicator, filler breather and all required nuts and bolts supplied loose and ready to assemble. The tanks come painted in black as standard but are available in grey if required and are pre-drilled ready to fit the assemblies.

FLOWFIT

14L CAPACITY HYDRAULIC OIL TANK WITH TANK ACCESSORIES

14 Litre capacity tank kits supplied with tank,return line filter, level indicator, filler breather and drain plug along with all required nuts and bolts. All components are supplied loose and ready to assemble with all necessary holes pre-drilled on tank. Comes painted in black but available in grey primer if required.

Tank: 14 Litre capacity, constructed in steel plate, oil and rust proof pre – painted, gasket and drain plug.

Dimensions: Height 290mm/ Width 335mm/ Depth 270mm

Tank top Filter: 3/8", ports 15 l/min, 10 micron filter, aluminium cover and housing, steel bowl, Buna seals, c/w visual indicator. Max working pressure 8 bar, Testing pressure 12 bar, burst pressure 16 bar, Operating temperature -30°C to +80°C. (Supplied loose)

Level and Temperature Indicator: Hole centres 76mm, Bolt thread sizes M10 x 1.5 , Length 106mm. Width 36mm, Operating temperature -30 to +80°c. Thermometer: double scale 0°c to 100°c, and 30°f to 210°f. Anodized aluminium frame with nylon face. (Supplied loose)

Filler Breather: Carbon steel, Basket and 500 micron, Filter air inlet element 10 micron. Mounting: 3 hole p.c.d 41mm (Supplied loose)

PART NO.	TANK CAPACITY	TANK TOP FILTER	LEVEL INDICATOR	FILLER BREATHER	FINISH	PRICE
HF12KIT	14 LITRE	3/8" PORT 15 L/MIN 10 MICRON	76MM HOLE CENTRES	3 HOLE PCD 10 MICRON	BLACK	£362.94

22L CAPACITY HYDRAULIC OIL TANK WITH TANK ACCESSORIES

22 Litre capacity tank kits supplied with tank,return line filter, level indicator, filler breather and drain plug along with all required nuts and bolts. All components are supplied loose and ready to assemble with all necessary holes pre-drilled on tank. Comes painted in black but available in grey primer if required.

Tank: 22 Litre capacity, constructed in steel plate, oil and rust proof pre – painted, gasket and drain plug.

Dimensions: Height 305mm/ Width 410mm/ Depth 325mm

Tank top Filter: 3/8" ports, 15 l/min, 10 micron filter, aluminium cover and housing, steel bowl, Buna seals, c/w visual indicator. Max working pressure 8 bars, testing pressure 12 bar, burst pressure 16 bars, Operating temperature -30°C to +80°C. (Supplied loose)

Level and Temperature Indicator: Hole centres 76mm, Bolt thread sizes M10 x 1.5, Length 106mm. Width 36mm, Operating temperature -30°C to +80°C. Thermometer: double scale 0°C to 100°C, and 30°F to 210°F, Anodized aluminium frame with nylon face (Supplied loose)

Filler Breather: Carbon steel, Basket at 500 micron, Filter air inlet element 10 micron. Mounting: 3 hole p.c.d 41mm (Supplied loose)

PART NO.	TANK CAPACITY	TANK TOP FILTER	LEVEL INDICATOR	FILLER BREATHER	FINISH	PRICE
HF16KIT	22 LITRE	3/8" PORT 15 L/MIN 10 MICRON	76MM HOLE CENTRES	3 HOLE PCD 10 MICRON	BLACK	£407.03

39L CAPACITY HYDRAULIC OIL TANK WITH TANK ACCESSORIES

39 Litre capacity tank kits supplied with tank,return line filter, level indicator, filler breather and drain plug along with all required nuts and bolts. All components are supplied loose and ready to assemble with all necessary holes pre-drilled on tank. Comes painted in black but available in grey primer if required.

Tank: 39 Litre capacity, constructed in steel plate, oil and rust proof pre – painted, gasket and drain plug.

Dimensions: Height 335mm/ Width 470mm/ Depth 365mm

Tank top Filter: 3/4", ports 35 l/min, 10 micron filter, aluminium cover and housing, steel bowl, Buna seals, c/w visual indicator. Max working pressure 8 bar, Testing pressure 12 bar, burst pressure 16 bar, Operating temperature -30°C to +80°C. (Supplied loose)

Level and Temperature Indicator: Hole centres 127mm, Bolt thread sizes M10 x 1.5 , Length 157mm. Width 36mm, Operating temperature -30°C to +80°C. Thermometer: double scale 0°C to 100°C, and 30°F to 210°F, Anodized aluminium frame with nylon face (Supplied loose)

Filler Breather: Carbon steel, Plastic Basket at 500 micron. Filter: air inlet element 40 micron, gasket rubberised cork, screws self tapping. Mounting: 6 hole p.c.d 70/73mm (Supplied loose)

PART NO.	TANK CAPACITY	TANK TOP FILTER	LEVEL INDICATOR	FILLER BREATHER	FINISH	PRICE
HF30KIT	39 LITRE	3/4" PORT 35 L/MIN 10 MICRON	127MM HOLE CENTRES	6 HOLE PCD 40 MICRON	BLACK	£515.29

58L CAPACITY HYDRAULIC OIL TANK WITH TANK ACCESSORIES

58 Litre capacity tank kits supplied with tank,return line filter, level indicator, filler breather and drain plug along with all required nuts and bolts. All components are supplied loose and ready to assemble with all necessary holes pre-drilled on tank. Comes painted in black but available in grey primer if required.

Tank: 58 Litre capacity, constructed in steel plate, oil and rust proof pre – painted, gasket and drain plug.

Dimensions: Height 365mm/ Width 600mm/ Depth 470mm

Tank top Filter: 1/2", ports 35 l/min, 10 micron filter, aluminium cover and housing, steel bowl, Buna seals, c/w visual indicator. Max working pressure 8 bar, Testing pressure 12 bar, burst pressure 16 bar, Operating temperature -30°C to +80°C. (Supplied loose)

Level and Temperature Indicator: Hole centres 127mm, Bolt thread sizes M10 x 1.5 , Length 157mm. Width 36mm, Operating temperature -30°C to +80°C. Thermometer: double scale 0°C to 100°C, and 30°F to 210°F, Anodized aluminium frame with nylon face (Supplied loose)

Filler Breather: Carbon steel, Plastic Basket at 500 micron. Filter: air inlet element 40 micron, gasket rubberised cork, screws self tapping. Mounting: 6 hole p.c.d 70/73mm (Supplied loose)

PART NO.	TANK CAPACITY	TANK TOP FILTER	LEVEL INDICATOR	FILLER BREATHER	FINISH	PRICE
HF55KIT	58 LITRE	1/2" PORT 35 L/MIN 10 MICRON	127MM HOLE CENTRES	6 HOLE PCD 40 MICRON	BLACK	£531.38

75L CAPACITY HYDRAULIC OIL TANK WITH TANK ACCESSORIES

75 Litre capacity tank kits supplied with tank,return line filter, level indicator, filler breather and drain plug along with all required nuts and bolts. All components are supplied loose and ready to assemble with all necessary holes pre-drilled on tank. Comes painted in black but available in grey primer if required.

Tank: 75 Litre capacity, constructed in steel plate, oil and rust proof pre – painted, gasket and drain plug, lid thickness 4mm

Dimensions: Height 455mm/ Width 600mm/ Depth 470mm

Tank top Filter: 3/4" ports 55 l/min, 10 micron filter, aluminium cover and housing, steel bowl, Buna seals, c/w visual indicator. Max working pressure 8 bar, Testing pressure 12 bar, burst pressure 16 bar, Operating temperature - 30°C to +80°C. (Supplied loose)

Level and Temperature Indicator: Hole centres 127mm, Bolt thread sizes M10 x 1.5 , Length 157mm. Width 36mm, Operating temperature -30°C to +80°C. Thermometer: double scale 0°C to 100°C, and 30°F to 210°F, Anodized aluminium frame with nylon face (Supplied loose)

Filler Breather: Carbon steel, Plastic Basket at 500 micron. Filter: air inlet element 40 micron, gasket rubberised cork, screws self tapping. Mounting: 6 hole p.c.d 73mm (Supplied loose)

PART NO.	TANK CAPACITY	TANK TOP FILTER	LEVEL INDICATOR	FILLER BREATHER	FINISH	PRICE
HF75KIT	75 LITRE	3/4" PORT 55 L/MIN 10 MICRON	127MM HOLE CENTRES	6 HOLE PCD 40 MICRON	BLACK	£661.42

100L CAPACITY HYDRAULIC OIL TANK WITH TANK ACCESSORIES

100 Litre capacity tank kits supplied with tank,return line filter, level indicator, filler breather and drain plug along with all required nuts and bolts. All components are supplied loose and ready to assemble with all necessary holes pre-drilled on tank. Comes painted in black but available in grey primer if required.

Tank: 100 Litre capacity, constructed in steel plate, oil and rust proof pre – painted, gasket and drain plug, lid thickness 4mm

Dimensions: Height 505mm/ Width 675mm/ Depth 520mm

Tank top Filter: 1" ports, 65 l/min, 10 micron filter, aluminium cover and housing, steel bowl, Buna seals, c/w visual indicator. Max working pressure 8 bar, Testing pressure 12 bar, burst pressure 16 bar, Operating temperature -30°C to +80°C. (Supplied loose)

Level and Temperature Indicator: Hole centres 254mm, Bolt thread sizes M10 x 1.5 , Length 284mm. Width 36mm, Operating temperature -30°C to +80°C. Thermometer: double scale 0°C to 100°C, and 30°F to 210°F, Anodized aluminium frame with nylon face (Supplied loose)

Filler Breather: Carbon steel, Plastic Basket at 500 micron. Filter: air inlet element 40 micron, gasket rubberised cork, screws self tapping. Mounting: 6 hole p.c.d 73mm (Supplied loose)

PART NO.	TANK CAPACITY	TANK TOP FILTER	LEVEL INDICATOR	FILLER BREATHER	FINISH	PRICE
HF100KIT	100 LITRE	1" PORT 65 L/MIN 10 MICRON	254MM HOLE CENTRES	6 HOLE PCD 40 MICRON	BLACK	£764.28

50% OFF ALL PRICES

165L CAPACITY HYDRAULIC OIL TANK WITH TANK ACCESSORIES

165 Litre capacity tank kits supplied with tank,return line filter, level indicator, filler breather and drain plug along with all required nuts and bolts. All components are supplied loose and ready to assemble with all necessary holes pre-drilled on tank. Comes painted in black but available in grey primer if required.

Tank: 165 Litre capacity, constructed in steel plate, oil and rust proof pre – painted, gasket and drain plug, lid thickness 4mm

Dimensions: Height 555mm/ Width 805mm/ Depth 620mm

Tank top Filter: 1", ports 65 l/min, 10 micron filter, aluminium cover and housing, steel bowl, Buna seals, c/w visual indicator. Max working pressure 8 bar, Testing pressure 12 bar, burst pressure 16 bar, Operating temperature -30°C to +80°C. (Supplied loose)

Level and Temperature Indicator: Hole centres 254mm, Bolt thread sizes M10 x 1.5 , Length 284mm. Width 36mm, Operating temperature -30°C to +80°C. (Supplied loose)

Thermometer: Double scale 0°C to 100°C, and 30°F to 210°F, Anodized aluminium frame with nylon face

Filler Breather: Carbon steel, Plastic Basket at 500 micron. Filter: air inlet element 40 micron, gasket rubberised cork, screws self tapping. Mounting: 6 hole p.c.d 70/73mm (Supplied loose)

PART NO.	TANK CAPACITY	TANK TOP FILTER	LEVEL INDICATOR	FILLER BREATHER	FINISH	PRICE
HF180KIT	165 LITRE	1"PORT 65 L/MIN 10 MICRON	254MM HOLE CENTRES	6 HOLE PCD 40 MICRON	BLACK	£930.84

TANK HEATERS

VR IMMERSION HEATERS 598
CARTRIDGE SCREWED-IN HEATERS 599
CARTRIDGE SCREWED-IN HEATERS WITH TEMPERATURE ADJUSTMENT 600
RHK-TUBE SCREWED-IN HEATERS 601
RHK-TH-TUBE SCREWED-IN HEATERS WITH TEMPERATURE ADJUSTMENT 602

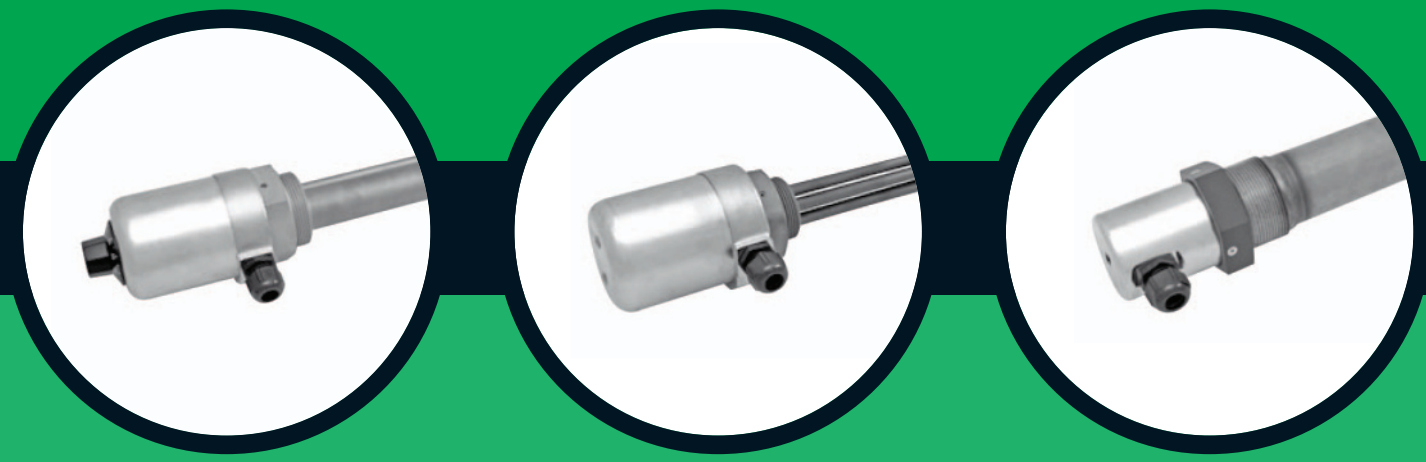

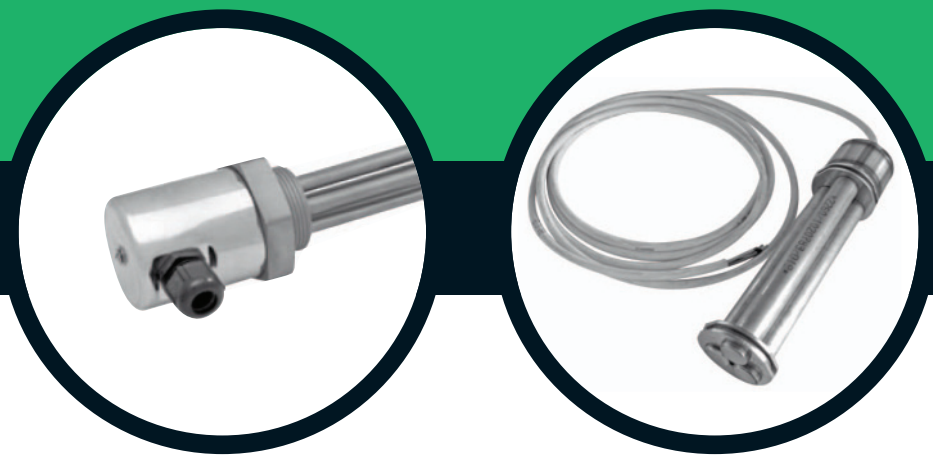

FLOWFIT

TANK HEATERS

- Standardgeräte von 0,25 kW–5 kW lieferbar
- Ex-Schutz- und Sonderausführungen auf Anfrage
- Berechnungsprogramm zur Ermittlung der benötigten Tankheizung steht auf CD zur Verfügung (bitte anfordern)

- Standard devices of 0.25 kW–5 kW available
- Devices for Ex-protection and special devices on request
- A calculation programme for determination of the required tank heater is available

ANWENDUNGSBEREICH

Vorwärmung von Hydrauliköl auf Mineralölbasis, zum schnellen Erreichen der Betriebstemperatur an Hydraulikaggregaten. Die optimale Viskosität mindert den Verschleiß der Hydraulikkomponenten.

FIELD OF APPLICATION

Preheating of hydraulic oil on mineral basis for a fast reaching of the operating temperature at hydraulic units. The optimum viscosity decreases the wear of the hydraulic components.

VR

Tauchheizkörper mit Haftmagnet, kein Montageaufwand, ideal auch zum Nachrüsten bestehender Anlagen. Schutzart IP 68. Eingebautes Thermostat mit Abschalttemperatur 40°C (Standard).

Immersion heaters with magnetic clamp, no mounting effort, ideal solution to retrofit existing installations. Protection IP 68. Integrated thermostat with switch-off temperature 40°C (standard).

PTHK 90

Patroneneinschraubheizkörper mit Rohrheizkörpereinsatz. Schutzart IP 65. Bei dieser Ausführung kann der Heizeinsatz ohne Entleerung des Ölbehälters gewechselt werden. Einschraubgewinde G 1 1/2" und G 2".

Cartridge screwed-in tank heater with tube insert. Protection IP 65. This type of heating insert can be changed without evacuation of the oil tank. Screwed thread G 1 1/2" and G 2".

PTHK 91 TH

Patroneneinschraubheizkörper mit Temperaturregler, Außen-oder Inneneinstellung. Standard 0° C bis 85°C einstellbar. Schutzart IP 54. Bei dieser Ausführung kann der Heizeinsatz ohne Entleerung des Ölbehälters gewechselt werden. Einschraubgewinde G 2".

Cartridge screwed-in tank heater with temperature adjustment, external or internal regulation. Standard adjustable 0°C up to 85°C. Protection IP 54. This type of heating insert can be changed without evacuation of the oil tank. Screwed thread G 2".

RHK

Rohreinschraubheizkörper, Schutzart IP 54. Einschraubgewinde G 1 1/2".

Tube screwed-in heater, protection IP 54. Screwed thread G 1 1/2".

RHK-TH

Rohreinschraubheizkörper mit Temperaturregler. Außen- oder Inneneinstellung. Standard 0°C bis 85°C einstellbar. Schutzart IP 54. Einschraubgewinde G 1 1/2".

Tube screwed-in heater with temperature adjustment, external or internal regulation. Standard adjustable 0° C up to 85°. Protection IP 54. Screwed thread G 1 1/2".

VR TAUCHHEIZKÖRPER MIT HAFTMAGNET

VR IMMERSION HEATERS WITH MAGNETIC CLAMP

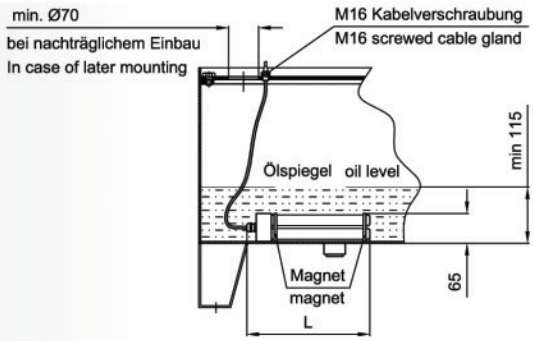

- Zur Vorwärmung von Hydrauliköl
- Kein Montageaufwand, ideal auch zum Nachrüsten bestehender Anlagen
- Horizontale oder vertikale Anordnung, geringer Mindestölpegel
- Mediumberührte Teile Edelstahl (14571), Messing bzw. Kunststoff
- Geschweißte Ausführung
- Haftmagnete zur Fixierung am Behälterboden oder an Behälter-/Trennwand
- Schutzart IP 68
- Eingebauter Thermostat mit Abschalttemperatur 40°C (Standard)
- Eingebauter Temperaturbegrenzer
- Oberflächenbelastung: 1,2 W/cm² für HLP
  0,6 W/cm² für HFA/HFC/HFD-R

- For preheating of hydraulic oil
- No mounting effort, ideal solution to retrofit existing installations
- Horizontal or vertical arrangement, low minimum oil level
- Medium touched pieces stainless steel (14571), brass and plastics respectively
- Welded type
- Magnetic clamps for fixing at tank bottom/partition wall
- Protection IP 68
- Integrated thermostat with switch-off temperature 40°C (standard)
- Integrated temperature limiter
- Surface charge: 1.2 W/cm² for HLP
  0.6 W/cm² for HFA/HFC/HFD-R

AUFBAU/WERKSTOFFE

- Heizelemente durch Edelstahlrohre (14571) geschützt
- Kabelanschluss aus Messing
- 3-poliges 4 meter langes Kunststoffkabel mit M16 Kabelverschraubung, beständig gegen Mineralöl, pflanzliche Öle und Fette sowie HFA- und HFC-Flüssigkeiten

CONSTRUCTION/MATERIALS

- Heating elements protected by tubes made of stainless steel (14571)
- Cable connection made of brass
- Three-pole plastic cable, length 4m, with screwed cable gland M16 resistant to mineral oil, vegetable oil and lubricants as well as HFA and HFC liquids

EINBAU

Heizung waagerecht auf den Boden oder senkrecht an die Behälterwand legen, Fixierung durch Haftmagnet. Das Kabel wird oberhalb des Ölpegels z.B. durch den Deckel nach außen geführt und mittels aufgeschobener Kabelverschraubung M16 am Behälter oder Deckel befestigt. Im Betrieb muss der Tankheizer min. 15 mm vom Medium bedeckt sein, da ansonsten mit Beschädigung oder Zerstörung des Mediums und/oder der Heizung zu rechnen ist. Bei Nachrüstung ist eine mindestens 70 mm große Öffnung im Tankdeckel vorzusehen, durch die der Heizkörper eingeführt wird. In keinem Fall sollte dieser am Anschlusskabel aufgehängt werden. Die integrierten Haftmagnete bewirken zusätzlich das "Aufsammeln" von Eisenpartikeln im Behälter.

MOUNTING

Insert the heater either horizontally to the bottom or vertically towards the tank wall. Fixation by magnetic clamp. The cable must be led outside above the oil level, e.g. through the cover and fixed at the tank or the cover by a screwed cable gland M16. During operation the tank heater must be covered by at least 15 mm of the medium, otherwise the medium and/or the heater might be damaged or destroyed. In case of retrofitting, the opening of the tank cover which the heater is led through, must amount to 70 mm at least. On no account it should be hung up on the connection cable. Additionally a "gathering" of iron particles in the tank will be achieved by the integrated magnetic clamps.

ART.-NR. PART NO.	TYP TYPE	LEISTUNG (Watt) POWER (Watt)	L= (mm)	SPANNUNG (VOLT) VOLTAGE (VOLT)	W/cm² W/cm²	THERMOSTAT THERMOSTAT	£ LIST
TH1955	VR 125 W/0,6-M	**125**	**200**	**230 V/AC**	0,6 HFA/ HFC/HFD-R	Abschalttemperatur 40°C (Standard) Switch-off temperature 40°C (standard)	**£922.39**
TH1956	VR 250 W/0,6-M	**250**	**300**		0,6 HFA/ HFC/HFD-R		**£977.65**
TH1957	VR 500 W/0,6-M	**500**	**500**		0,6 HFA/ HFC/HFD-R		**£1032.45**
TH1960	VR 250 W/1,2-M	**250**	**200**		1,2 HLP		**£922.39**
TH1961	VR 500 W/1,2-M	**500**	**300**		1,2 HLP		**£977.34**
TH1962	VR 1000 W/1,2-M	**1000**	**500**		1,2 HLP		**£1032.45**

- Kurzfristige Lieferung
- Sonderanfertigung auf Anfrage
- Zubehör auf Anfrage
  - Schutzrohr für Anschlussleitung
  - Kontrollanzeige Heizen/Störung im externen Gehäuse

- Short term delivery
- Special designs on request
- Accesssories on request
  - Protection tube for supply pipe
  - Indicator heating process/disturbance in external case

50% OFF ALL PRICES

PTHK 90 PATRONENEINSCHRAUBHEIZKÖRPER CARTRIDGE SCREWED-IN HEATERS

- Patronenheizkörper zur Vorwärmung von Hydrauliköl
- Auswechselbarer keramischer Heizeinsatz (Montage/Demontage ohne Ölablass möglich)
- Glanzverzinkte Stahlhaube
- Für waagerechten Einbau unter Ölspiegel
- Werkstoff: Stahl (weitere Werkstoffe auf Anfrage)
- Oberflächenbelastung 1,5 W/cm² für Hydrauliköle
- Schutzart IP 65
- Schaltbilder für unterschiedliche Anschluss-spannungen auf Anfrage

- Cartridge heaters for preheating of hydraulic oil
- Exchangeable ceramic heating insert (mounting/dismounting possible without evacuation of oil)
- Bright galvanized steel cap
- For horizontal mounting under oil level
- Material: Steel (further materials on request)
- Surface charge 1.5 W/cm² for hydraulic oils
- Protection IP 65
- Wiring schemes for different mains voltages on request

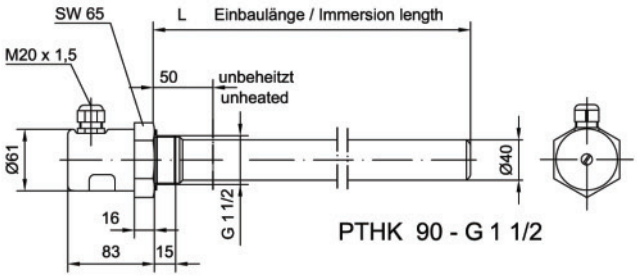

PTHK 90 - G 1 1/2

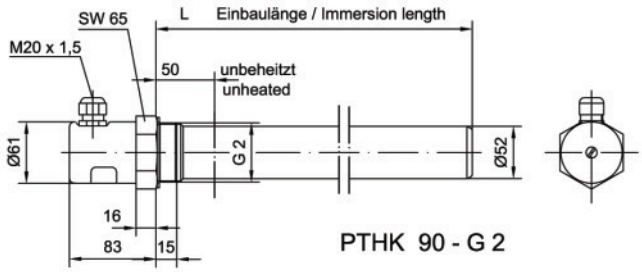

PTHK 90 - G 2

ART.-NR. PART NO.	TYP TYPE	LEISTUNG (WATT) POWER (WATT)	L= TAUCHTIEFE (mm) L= IMM. DEPTH (mm)	SPANNUNG (VOLT) VOLTAGE (VOLT)	£ LIST
TH1705*	PTHK 90-G 1 1/2"	400	200	Unbedingt bei der Bestellung angeben: In case of order please specify: Variante 1: 1 x 230 V Variante 2: 2 x 380 V Variante 3: 3 x 380 V Variante 4: 2 x 400 V Variante 5: 3 x 400 V	£483.48
TH1707*		600	300		£500.50
TH1709*		800	400		£510.98
TH1711*		1000	500		£529.32
TH1713*		1200	600		£539.81
TH1715*		1400	700		£556.84
TH1717		1600	800		£571.26
TH1719		1800	900		£594.84
TH1721		2000	1000		£618.43
TH1723		2200	1100		£644.63
TH1725		2400	1200		£659.03
TH1727		2800	1400		£687.87
TH1729		3200	1600		£776.95
TH1731		3600	1800		£825.43
TH1733		4000	2000		£889.64

*) Spannung max. 2-phasig Voltage two-phase max.

ART.-NR. PART NO.	TYP TYPE	LEISTUNG (WATT) POWER (WATT)	L= TAUCHTIEFE (mm) L= IMM. DEPTH (mm)	SPANNUNG (VOLT) VOLTAGE (VOLT)	£ LIST
TH1750*	PTHK 90-G 2"	500	200	Unbedingt bei der Bestellung angeben: In case of order please specify: Variante 1: 1 x 230 V Variante 2: 2 x 380 V Variante 3: 3 x 380 V Variante 4: 2 x 400 V Variante 5: 3 x 400 V	£507.05
TH1752*		750	300		£524.09
TH1754		1000	400		£542.43
TH1756		1250	500		£583.04
TH1758		1450	600		£638.08
TH1760		1700	700		£672.14
TH1762		1950	800		£703.59
TH1764		2200	900		£753.37
TH1766		2450	1000		£779.58
TH1768		2700	1100		£833.30
TH1770		2950	1200		£875.22
TH1772		3450	1400		£902.75
TH1774		3900	1600		£1024.59
TH1776		4400	1800		£1091.41
TH1778		4900	2000		£1187.05

*) Spannung max. 2-phasig Voltage two-phase max.

BESTELLSCHLÜSSEL ORDERING CODE

Art.-Nr. Part No.	Variante Variation	Spannung Voltage
1760	PTHK 90-G 2	2 x 380 V

PTHK 91 TH PATRONENEINSCHRAUB-HEIZKÖRPER MIT TEMPERATURREGLER

CARTRIDGE SCREWED-IN HEATERS WITH TEMPERATURE ADJUSTMENT

- Patronenheizkörper zur Vorwärmung von Hydrauliköl
- Temperaturregler für Innen- (THI) bzw. Außeneinstellung (THA), 1-polig 0-85°C, 16 Ampere
- Auswechselbarer keramischer Heizeinsatz (Montage/Demontage ohne Ölablass möglich)
- Glanzverzinkte Stahlhaube
- Für waagerechten Einbau unter Ölspiegel
- Werkstoff: Stahl (weitere Werkstoffe auf Anfrage)
- Oberflächenbelastung 1,5 W/cm² für Hydrauliköle
- Schutzart IP 54
- Schaltbilder für unterschiedliche Anschluss-spannungen auf Anfrage

- Cartridge heaters for preheating of hydraulic oil
- Temperature adjustment for internal (THI) and external regulation (THA), single-pole 0°-85°C, 16 amp
- Exchangeable ceramic heating insert (mounting/dismounting possible without evacuation of oil)
- Bright galvanized steel cap
- For horizontal mounting under oil level
- Material: Steel (further materials on request)
- Surface charge 1.5 W/cm² for hydraulic oils
- Protection IP 54
- Wiring schemes for different mains voltages on request

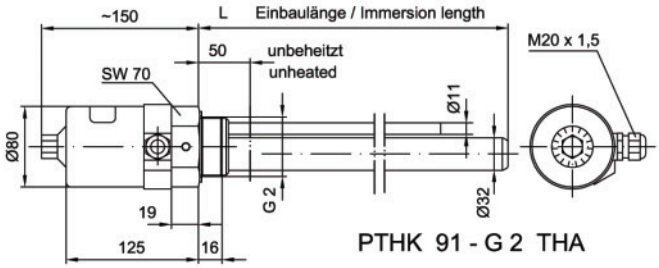

PTHK 91 - G 2 THA

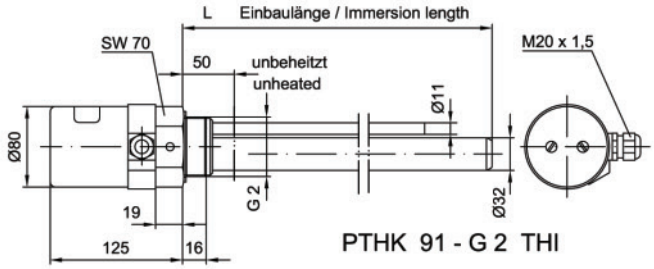

PTHK 91 - G 2 THI

ART.-NR. PART NO.	TYP TYPE	LEISTUNG (WATT) POWER (WATT)	L= TAUCHTIEFE (mm) L= IMM. DEPTH (mm)	SPANNUNG (VOLT) VOLTAGE (VOLT)	£ LIST
TH 1800*	PTHK 91-G 2" THA (Außeneinstellung) (external regulation)	450	300	Unbedingt bei der Bestellung angeben: In case of order please specify: Variante 1: 1 x 230 V Variante 2: 2 x 380 V Variante 3: 3 x 380 V Variante 4: 2 x 400 V Variante 5: 3 x 400 V	£1198.85
TH 1802*		600	400		£1213.25
TH 1804*		750	500		£1228.99
TH 1806*		900	600		£1244.71
TH 1808*		1050	700		£1261.74
TH 1810		1200	800		£1277.46
TH 1812		1350	900		£1290.57
TH 1814		1500	1000		£1303.66
TH 1816		1580	1100		£1314.51
TH 1818		1730	1200		£1333.81
TH 1820		1880	1300		£1344.28
TH 1822		2030	1400		£1360.01
TH 1824		2180	1500		£1371.80
TH 1826		2330	1600		£1386.22

*) Spannung max. 2-phasig Voltage two-phase max.

ART.-NR. PART NO.	TYP TYPE	LEISTUNG (WATT) POWER (WATT)	L= TAUCHTIEFE (mm) L= IMM. DEPTH (mm)	SPANNUNG (VOLT) VOLTAGE (VOLT)	£ LIST
TH 1801*	PTHK 91-G 2" THI (Inneneinstellung) (internal regulation)	450	300	Unbedingt bei der Bestellung angeben: In case of order please specify: Variante 1: 1 x 230 V Variante 2: 2 x 380 V Variante 3: 3 x 380 V Variante 4: 2 x 400 V Variante 5: 3 x 400 V	£1265.67
TH 1803*		600	400		£1281.40
TH 1805*		750	500		£1293.19
TH 1807*		900	600		£1307.61
TH 1809*		1050	700		£1329.87
TH 1811*		1200	800		£1341.66
TH 1813		1350	900		£1354.76
TH 1815		1500	1000		£1370.48
TH 1817		1580	1100		£1386.22
TH 1819		1730	1200		£1399.32
TH 1821		1880	1300		£1412.42
TH 1823		2030	1400		£1425.52
TH 1825		2180	1500		£1438.62
TH 1827		2330	1600		£1456.96

*) Spannung max. 2-phasig Voltage two-phase max.

BESTELLSCHLÜSSEL

ORDERING CODE

Art.-Nr. Part No.	Variante Variation	Spannung Voltage
1808	PTHK 91-G 2 THA	2 x 380 V

50% OFF ALL PRICES

RHK-ROHREINSCHRAUBHEIZKÖRPER — RHK-TUBE SCREWED-IN HEATERS

- Rohreinschraubheizkörper zur Vorwärmung von Hydrauliköl
- Glanzverzinkte Stahlhaube
- Für waagerechten Einbau unter Ölspiegel
- Werkstoff: Stahl (weitere Werkstoffe auf Anfrage)
- Oberflächenbelastung 1,5 W/cm² für Hydrauliköle
- Schutzart IP 65
- Schaltbilder für unterschiedliche Anschluss-spannungen auf Anfrage

- Tube screwed-in heater for preheating of hydraulic oil
- Bright galvanized steel cap
- For horizontal mounting under oil level
- Material: Steel (further materials on request)
- Surface charge 1.5 W/cm² for hydraulic oils
- Protection IP 65
- Wiring schemes for different mains voltages on request

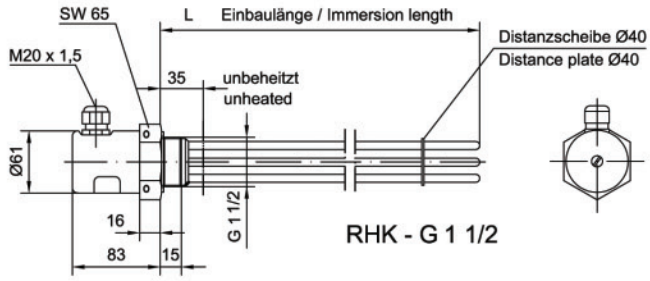

ART.-NR. PART NO.	TYP TYPE	LEISTUNG (WATT) POWER (WATT)	L= TAUCHTIEFE (mm) L= IMM. DEPTH (mm)	SPANNUNG (VOLT) VOLTAGE (VOLT)	£ LIST
TH1830*	RHK–G 1 1/2"	380	200	Unbedingt bei der Bestellung angeben: In case of order please specify: Variante 1: 1 x 230 V Variante 2: 2 x 380 V Variante 3: 3 x 380 V Variante 4: 2 x 400 V Variante 5: 3 x 400 V	£345.89
TH1832*		500	250		£366.87
TH1834		750	350		£402.24
TH1836		990	450		£440.23
TH1838		1450	650		£512.29
TH1840		1825	800		£569.94
TH1842		2300	1000		£647.25

*) Spannung max. 2-phasig Voltage two-phase max.

BESTELLSCHLÜSSEL — ORDERING CODE

Art.-Nr. Part No.	Variante Variation	Spannung Voltage
1832	RHK-G 1 1/2	2 x 380 V

RHK-TH-ROHREINSCHRAUBHEIZKÖRPER MIT TEMPERATURREGLER

RHK-TH-TUBE SCREWED-IN HEATERS WITH TEMPERATURE ADJUSTMENT

- Rohreinschraubheizkörper zur Vorwärmung von Hydrauliköl
- Temperaturregler für Innen-(THI) bzw. Außeneinstellung (THA), 1-polig 0-85°C, 16 Ampere
- Glanzverzinkte Stahlhaube
- Für waagerechten Einbau unter Ölspiegel
- Werkstoff: Stahl (weitere Werkstoffe auf Anfrage)
- Oberflächenbelastung 1,5 W/cm² für Hydrauliköle
- Schutzart IP 54
- Schaltbilder für unterschiedliche Anschlussspannungen auf Anfrage

- Tube screwed-in heater for preheating of hydraulic oil
- Temperature adjustment for internal (THI) and external regulation (THA), single-pole 0-85°C, 16 amp
- Bright galvanized steel cap
- For horizontal mounting under oil level
- Material: Steel (further materials on request)
- Surface charge 1.5 W/cm² for hydraulic oils
- Protection IP 54
- Wiring schemes for different mains voltages on request

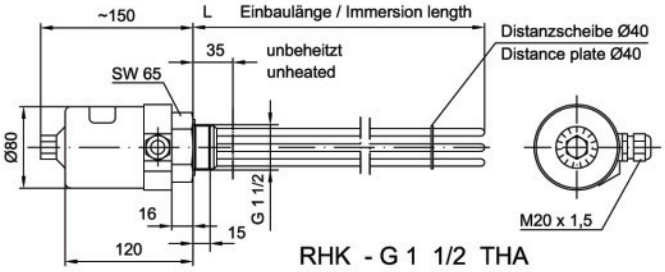

RHK - G 1 1/2 THA

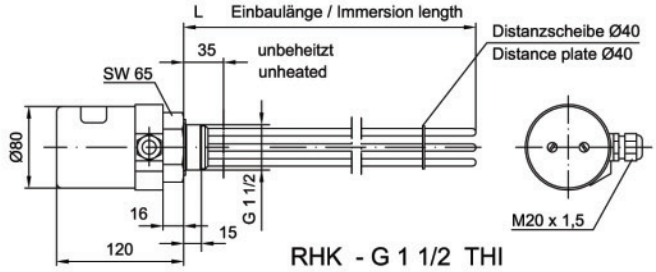

RHK - G 1 1/2 THI

ART.-NR. PART NO.	TYP TYPE	LEISTUNG (WATT) POWER (WATT)	L= TAUCHTIEFE (mm) L= IMM. DEPTH (mm)	SPANNUNG (VOLT) VOLTAGE (VOLT)	£ LIST
TH1860*	**RHK-G 1 1/2" THA (Außeneinstellung) (external regulation)**	380	200	Unbedingt bei der Bestellung angeben: In case of order please specify: Variante 1: 1 x 230 V, Variante 2: 2 x 380 V, Variante 3: 3 x 380 V, Variante 4: 2 x 400 V, Variante 5: 3 x 400 V	£721.92
TH1862*		500	250		£742.89
TH1864		750	350		£779.58
TH1866		990	450		£817.57
TH1868		1460	650		£890.95
TH1870		1825	800		£943.36
TH1872		2300	1000		£1020.65

*) Spannung max. 2-phasig Voltage two-phase max.

ART.-NR. PART NO.	TYP TYPE	LEISTUNG (WATT) POWER (WATT)	L= TAUCHTIEFE (mm) L= IMM. DEPTH (mm)	SPANNUNG (VOLT) VOLTAGE (VOLT)	£ LIST
TH1861*	**RHK-G 1 1/2" THI (Inneneinstellung) (internal regulation)**	380	200	Unbedingt bei der Bestellung angeben: In case of order please specify: Variante 1: 1 x 230 V, Variante 2: 2 x 380 V, Variante 3: 3 x 380 V, Variante 4: 2 x 400 V, Variante 5: 3 x 400 V	£790.06
TH1863*		500	250		£805.78
TH1865		750	350		£846.40
TH1867		990	450		£879.15
TH1869		1460	650		£955.16
TH1871		1825	800		£1008.87
TH1873		2300	1000		£1087.48

*) Spannung max. 2-phasig Voltage two-phase max.

BESTELLSCHLÜSSEL

ORDERING CODE

Art.-Nr. Part No.	Variante Variation	Spannung Voltage
1862	RHK G 1 1/2 THA	2 x 380 V

PRESSURE GAUGES

PNEUMATIC SPECIFICATION 40mm BASE ENTRY.....604
PNEUMATIC SPECIFICATION 40mm REAR ENTRY.....604
PNEUMATIC SPECIFICATION 50mm BASE ENTRY.....604
PNEUMATIC SPECIFICATION 50mm REAR ENTRY.....604
HYDRAULIC SPECIFICATION 63mm BASE ENTRY.....605
HYDRAULIC SPECIFICATION 63mm REAR ENTRY.....605
HYDRAULIC SPECIFICATION 100mm BASE ENTRY.....606
HYDRAULIC SPECIFICATION 100mm REAR ENTRY.....606
GAUGE ISOLATOR VALVES.....607
FT290 IN LINE GAUGE ISOLATOR NEEDLE VALVES.....607
FT291 90° ANGLE GAUGE ISOLATOR NEEDLE VALVES.....607
FT292 PUSH-BUTTON GAUGE ISOLATOR VALVES.....607
FT299 PRESSURE GAUGE SWIVEL ADAPTORS - 400 BAR RATED...607

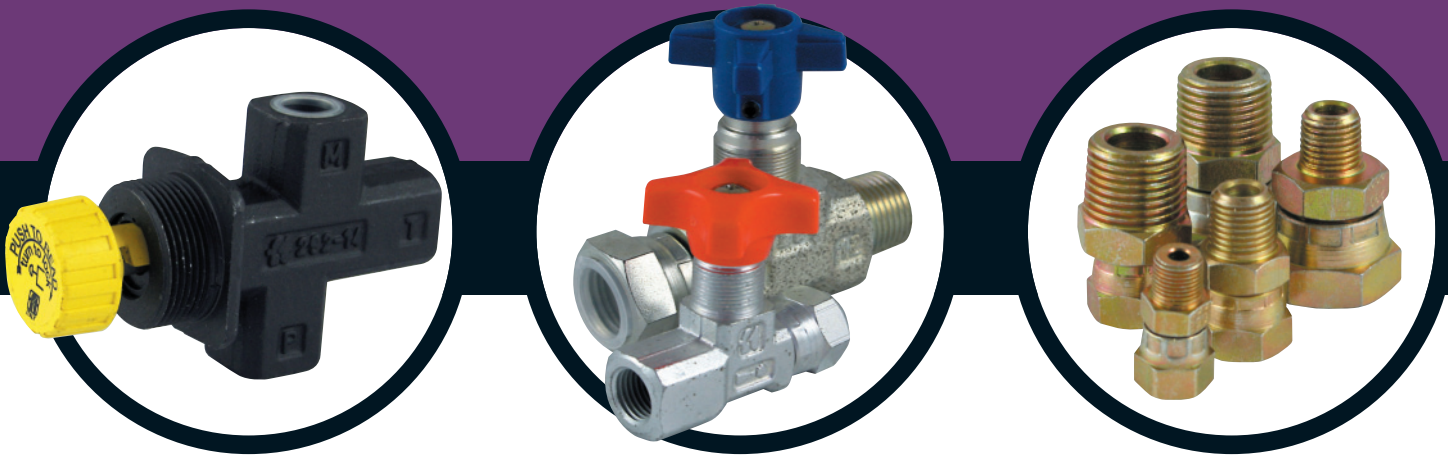

FLOWFIT

Dual scale psi (outer) in black and bar (inner) in red

PNEUMATIC SPECIFICATION 40mm BASE ENTRY PRESSURE GAUGE

Options: Throttle Screw, Customised Dials
Application: For General Purpose, Standard Duty in Non-Corrosive Environments.
Case: Painted Black Steel.
Bezel: Painted Black Steel, Chromed or Snap On Plastic Window.
Window: Glass or Polycarbonate

Wetted Parts: Brass
Ranges: -30"Hg, 1bar Vacuum to 10,000 PSI, 700 bar
Accuracy Class: ASME B40.1-1991 B GRADE
Connections: 1/8" BSPT bottom entry
Temp. Range: Ambient Temperature –25'C to 60'C

Minimum temperature should not be less than or equal to the freezing point of the process fluid

ORDER CODE	DESCRIPTION	PRESSURE RANGE		PRICE
PGP40B015PSI	BOTTOM ENTRY DRY	0-15PSI	(1 BAR)	£9.11
PGP40B030PSI	BOTTOM ENTRY DRY	0-30PSI	(2 BAR)	£9.11
PGP40B060PSI	BOTTOM ENTRY DRY	0-60PSI	(4 BAR)	£9.11
PGP40B0100PSI	BOTTOM ENTRY DRY	0-100PSI	(7 BAR)	£9.11
PGP40B0160PSI	BOTTOM ENTRY DRY	0-160PSI	(11 BAR)	£9.11
PGP40B0200PSI	BOTTOM ENTRY DRY	0-200PSI	(14 BAR)	£9.11
PGP40B0300PSI	BOTTOM ENTRY DRY	0-300PSI	(21 BAR)	£9.11

Dual scale psi (outer) in black and bar (inner) in red

PNEUMATIC SPECIFICATION 40mm REAR ENTRY PRESSURE GAUGE

Options: Throttle Screw, Customised Dials
Application: For General Purpose, Standard Duty in Non-Corrosive Environments.
Case: Painted Black Steel.
Bezel: Painted Black Steel, Chromed or Snap On Plastic Window.
Window: Glass or Polycarbonate

Wetted Parts: Brass
Accuracy Class: ASME B40.1-1991 B GRADE
Ranges: -30"Hg, 1bar Vacuum to 10,000 PSI, 700 bar
Connections: 1/8" BSPT centre back entry
Temp. Range: Ambient Temperature –25'C to 60'C

Minimum temperature should not be less than or equal to the freezing point of the process fluid

ORDER CODE	DESCRIPTION	PRESSURE RANGE		PRICE
PGP40R015PSI	REAR ENTRY DRY	0-15PSI	(1 BAR)	£9.11
PGP40R030PSI	REAR ENTRY DRY	0-30PSI	(2 BAR)	£9.11
PGP40R060PSI	REAR ENTRY DRY	0-60PSI	(4BAR)	£9.11
PGP40R0100PSI	REAR ENTRY DRY	0-100PSI	(7 BAR)	£9.11
PGP40R0160PSI	REAR ENTRY DRY	0-160PSI	(11 BAR)	£9.11
PGP40R0200PSI	REAR ENTRY DRY	0-200PSI	(14 BAR)	£9.11
PGP40R0300PSI	REAR ENTRY DRY	0-300PSI	(21 BAR)	£9.11
PGP40R0400PSI	REAR ENTRY DRY	0-400PSI	(28 BAR)	£9.11

Dual scale psi (outer) in black and bar (inner) in red

PNEUMATIC SPECIFICATION 50mm BASE ENTRY PRESSURE GAUGE

Options: Throttle Screw, Customised Dials
Application: For General Purpose, Standard Duty in Non-Corrosive Environments.
Case: Painted Black Steel.
Bezel: Painted Black Steel, Chromed or Snap On Plastic Window.
Window: Glass or Polycarbonate

Wetted Parts: Brass
Accuracy Class: ASME B40.1-1991 B GRADE
Ranges: -30"Hg, 1bar Vacuum to 10,000 PSI, 700 bar
Connections: 1/4" BSPT bottom entry
Temp. Range: Ambient Temperature –25'C to 60'C

Minimum temperature should not be less than or equal to the freezing point of the process fluid

ORDER CODE	DESCRIPTION	PRESSURE RANGE		PRICE
PGP50B015PSI	BOTTOM ENTRY DRY	0-15PSI	(1 BAR)	£9.11
PGP50B030PSI	BOTTOM ENTRY DRY	0-30PSI	(2 BAR)	£9.11
PGP50B060PSI	BOTTOM ENTRY DRY	0-60PSI	(4BAR)	£9.11
PGP50B0100PSI	BOTTOM ENTRY DRY	0-100PSI	(7 BAR)	£9.11
PGP50B0160PSI	BOTTOM ENTRY DRY	0-160PSI	(11 BAR)	£9.11
PGP50B0200PSI	BOTTOM ENTRY DRY	0-200PSI	(14 BAR)	£9.11
PGP50B0300PSI	BOTTOM ENTRY DRY	0-300PSI	(21 BAR)	£9.11
PGP50B0400PSI	BOTTOM ENTRY DRY	0-400PSI	(28 BAR)	£9.11

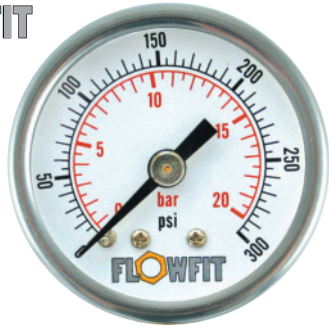

Dual scale psi (outer) in black and bar (inner) in red

PNEUMATIC SPECIFICATION 50mm REAR ENTRY PRESSURE GAUGE

Options: Throttle Screw, Customised Dials
Application: For General Purpose, Standard Duty in Non-Corrosive Environments.
Case: Painted Black Steel.
Bezel: Painted Black Steel, Chromed or Snap On Plastic Window.
Window: Glass or Polycarbonate

Wetted Parts: Brass
Accuracy Class: ASME B40.1-1991 B GRADE
Ranges: -30"Hg, 1bar Vacuum to 10,000 PSI, 700 bar
Connections: 1/4" BSPT centre back entry
Temp. Range: Ambient Temperature –25'C to 60'C

Minimum temperature should not be less than or equal to the freezing point of the process fluid

ORDER CODE	DESCRIPTION	PRESSURE RANGE		PRICE
PGP50R015PSI	REAR ENTRY DRY	0-15PSI	(1 BAR)	£9.11
PGP50R030PSI	REAR ENTRY DRY	0-30PSI	(2 BAR)	£9.11
PGP50R060PSI	REAR ENTRY DRY	0-60PSI	(4BAR)	£9.11
PGP50R0100PSI	REAR ENTRY DRY	0-100PSI	(7 BAR)	£9.11
PGP50R0160PSI	REAR ENTRY DRY	0-160PSI	(11 BAR)	£9.11
PGP50R0200PSI	REAR ENTRY DRY	0-200PSI	(14 BAR)	£9.11
PGP50R0300PSI	REAR ENTRY DRY	0-300PSI	(21 BAR)	£9.11
PGP50R0400PSI	REAR ENTRY DRY	0-400PSI	(28 BAR)	£9.11

50% OFF ALL PRICES

HYDRAULIC SPECIFICATION 63mm BASE ENTRY PRESSURE GAUGE

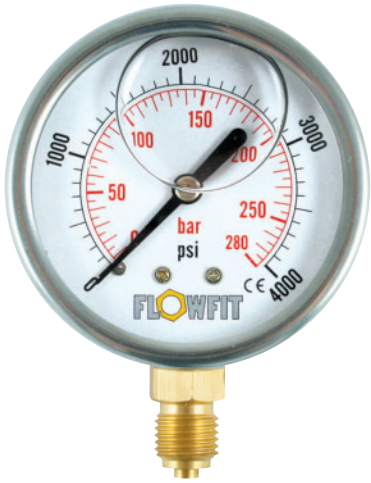

Dual scale psi (outer) in black and bar (inner) in red

Rubber Protective Gauge Covers

Options: Throttle Screw, Customised Dials, SS Wetted Parts
Application: For Extended Life, Harsh, and Vibration Environments.
Case: 304 Stainless Steel
Bezel: 304 Stainless Steel
Window: Polycarbonate
Wetted Parts: Brass / Bronze

Damping Fluid: Glycerine
Ranges: -30"Hg, 1bar Vacuum to 10,000 PSI, 700 bar
Accuracy Class: ASME B40.1-1991 B GRADE
Connections: 1/4" BSP bottom entry with spigot to EN837
Temp. Range: Ambient Temperature –25°C to 60°C

Minimum temperature should not be less than or equal to the freezing point of the process fluid.

ORDER CODE	DESCRIPTION	PRESSURE RANGE		PRICE
PG63B-030HG	BASE ENTRY GLY FILLED	-30HG	(-1 BAR)	£17.31
PG63B015PSI	BASE ENTRY GLY FILLED	0-15PSI	(1 BAR)	£17.31
PG63B030PSI	BASE ENTRY GLY FILLED	0-30PSI	(2 BAR)	£17.31
PG63B060PSI	BASE ENTRY GLY FILLED	0-60PSI	(4 BAR)	£17.31
PG63B0100PSI	BASE ENTRY GLY FILLED	0-100PSI	(7 BAR)	£17.31
PG63B0160PSI	BASE ENTRY GLY FILLED	0-160PSI	(11 BAR)	£17.31
PG63B0200PSI	BASE ENTRY GLY FILLED	0-200PSI	(14 BAR)	£17.31
PG63B0300PSI	BASE ENTRY GLY FILLED	0-300PSI	(21 BAR)	£17.31
PG63B0400PSI	BASE ENTRY GLY FILLED	0-400PSI	(28 BAR)	£17.31
PG63B0500PSI	BASE ENTRY GLY FILLED	0-500PSI	(28 BAR)	£17.31
PG63B0600PSI	BASE ENTRY GLY FILLED	0-600PSI	(41 BAR)	£17.31
PG63B01000PSI	BASE ENTRY GLY FILLED	0-1000PSI	(70 BAR)	£17.31
PG63B01500PSI	BASE ENTRY GLY FILLED	0-1500PSI	(100 BAR)	£17.31
PG63B02000PSI	BASE ENTRY GLY FILLED	0-2000PSI	(138 BAR)	£17.31
PG63B03000PSI	BASE ENTRY GLY FILLED	0-3000PSI	(207 BAR)	£17.31
PG63B04000PSI	BASE ENTRY GLY FILLED	0-4000PSI	(275 BAR)	£17.31
PG63B05000PSI	BASE ENTRY GLY FILLED	0-5000PSI	(344 BAR)	£17.31
PG63B06000PSI	BASE ENTRY GLY FILLED	0-6000PSI	(414 BAR)	£17.31
PG63B08500PSI	BASE ENTRY GLY FILLED	0-8500PSI	(586 BAR)	£15.88
PG63B010000PSI	BASE ENTRY GLY FILLED	0-10000PSI	(690 BAR)	£17.31
PG63B014500PSI	BASE ENTRY GLY FILLED	0-14500PSI	(1000 BAR)	£145.77
PG63B-30HG060PSI	BASE ENTRY GLY FILLED	-30HG +60 PSI	(-1/+4 BAR)	£17.31

OPTIONAL EXTRAS F0R 63mm & 100mm GAUGES		
ORDER CODE	DESCRIPTION	PRICE
CALI63100	CALIBRATION C/W CERTIFICATE	£70.87
PG63COVER	RUBBER PROTECTIVE COVER	£13.49

HYDRAULIC SPECIFICATION 63mm REAR ENTRY PRESSURE GAUGE

Dual scale psi (outer) in black and bar (inner) in red

Rubber Protective Cover

Options: Throttle Screw, Customised Dials, SS Wetted Parts
Application: For Extended Life, Harsh, and Vibration Environments.
Case: 304 Stainless Steel
Bezel: 304 Stainless Steel
Window: Polycarbonate
Wetted Parts: Brass / Bronze

Damping Fluid: Glycerine
Accuracy Class: ASME B40.1-1991 B GRADE
Ranges: -30"Hg, 1bar Vacuum to 10,000 PSI, 700 bar
Connections: 1/4" BSP centre back entry with spigot to EN837
Temp. Range: Ambient Temperature –25'C to 60'C

Minimum temperature should not be less than or equal to the freezing point of the process fluid.

ORDER CODE	DESCRIPTION	PRESSURE RANGE		PRICE
PG63R-30HG	REAR ENTRY GLY FILLED	-30HG	(-1 BAR)	£20.04
PG63R015PSI	REAR ENTRY GLY FILLED	0-15PSI	(1 BAR)	£20.04
PG63R030PSI	REAR ENTRY GLY FILLED	0-30PSI	(2 BAR)	£20.04
PG63R060PSI	REAR ENTRY GLY FILLED	0-60PSI	(4 BAR)	£20.04
PG63R0100PSI	REAR ENTRY GLY FILLED	0-100PSI	(7 BAR)	£20.04
PG63R0160PSI	REAR ENTRY GLY FILLED	0-160PSI	(11 BAR)	£20.04
PG63R0200PSI	REAR ENTRY GLY FILLED	0-200PSI	(14 BAR)	£20.04
PG63R0300PSI	REAR ENTRY GLY FILLED	0-300PSI	(21 BAR)	£20.04
PG63R0400PSI	REAR ENTRY GLY FILLED	0-400PSI	(28 BAR)	£20.04
PG63R0500PSI	REAR ENTRY GLY FILLED	0-500PSI	(34 BAR)	£20.04
PG63R0600PSI	REAR ENTRY GLY FILLED	0-600PSI	(41 BAR)	£20.04
PG63R01000PSI	REAR ENTRY GLY FILLED	0-1000PSI	(70 BAR)	£20.04
PG63R01500PSI	REAR ENTRY GLY FILLED	0-1500PSI	(100 BAR)	£20.04
PG63R02000PSI	REAR ENTRY GLY FILLED	0-2000PSI	(138 BAR)	£20.04
PG63R03000PSI	REAR ENTRY GLY FILLED	0-3000PSI	(207 BAR)	£20.04
PG63R04000PSI	REAR ENTRY GLY FILLED	0-4000PSI	(275 BAR)	£20.04
PG63R05000PSI	REAR ENTRY GLY FILLED	0-5000PSI	(334 BAR)	£20.04
PG63R06000PSI	REAR ENTRY GLY FILLED	0-6000PSI	(414 BAR)	£20.04
PG63R08500PSI	REAR ENTRY GLY FILLED	0-8500PSI	(586 BAR)	£20.04
PG63R010000PSI	REAR ENTRY GLY FILLED	0-10000PSI	(690 BAR)	£20.04
PG63R014500PSI	REAR ENTRY GLY FILLED	0-14500PSI	(1000 BAR)	£145.77
PG63R-30HG060PSI	REAR ENTRY GLY FILLED	-30HG +60 PSI	(-1/+4 BAR)	£20.04

OPTIONAL EXTRAS		
ORDER CODE	DESCRIPTION	PRICE
PG63F	3 POSITION FACE FIXING	£8.19
PG63RCLAMPS	REAR CLAMPS TO SUIT 63MM REAR ENTRY	£6.56
PG63COVER	RUBBER PROTECTIVE COVER	£14.58

HYDRAULIC SPECIFICATION 100mm BASE ENTRY PRESSURE GAUGE

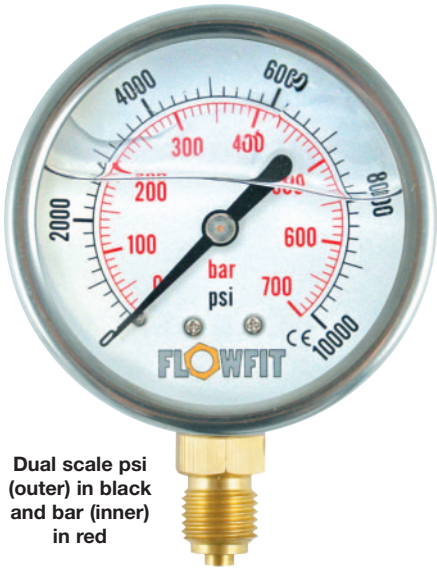

Dual scale psi (outer) in black and bar (inner) in red

Rubber Protective Cover

Options: Throttle Screw, Customised Dials, SS Wetted Parts
Application: For Extended Life, Harsh, and Vibration Environments.
Case: 304 Stainless Steel
Bezel: 304 Stainless Steel
Window: Polycarbonate
Wetted Parts: Brass / Bronze

Damping Fluid: Glycerine
Ranges: -30"Hg, 1bar Vacuum to 10,000 PSI, 700 bar
Accuracy Class: ASME B40.1-1991 A GRADE
Connections: 1/2" BSP bottom entry with spigot to EN837
Temp. Range: Ambient Temperature –25'C to 60'C

Minimum temperature should not be less than or equal to the freezing point of the process fluid.

ORDER CODE	DESCRIPTION	PRESSURE RANGE		PRICE
PG100B-30HG	BASE ENTRY GLY FILLED	-30HG	(-1 BAR)	£87.83
PG100B015PSI	BASE ENTRY GLY FILLED	0-15PSI	(1 BAR)	£87.83
PG100B030PSI	BASE ENTRY GLY FILLED	0-30PSI	(2 BAR)	£87.83
PG100B060PSI	BASE ENTRY GLY FILLED	0-60PSI	(4 BAR)	£87.83
PG100B0100PSI	BASE ENTRY GLY FILLED	0-100PSI	(7 BAR)	£87.83
PG100B0160PSI	BASE ENTRY GLY FILLED	0-160PSI	(11 BAR)	£87.83
PG100B0200PSI	BASE ENTRY GLY FILLED	0-200PSI	(14 BAR)	£87.83
PG100B0300PSI	BASE ENTRY GLY FILLED	0-300PSI	(21 BAR)	£87.83
PG100B0400PSI	BASE ENTRY GLY FILLED	0-400PSI	(28 BAR)	£87.83
PG100B0500PSI	BASE ENTRY GLY FILLED	0-500PSI	(34 BAR)	£87.83
PG100B0600PSI	BASE ENTRY GLY FILLED	0-600PSI	(41 BAR)	£87.83
PG100B01000PSI	BASE ENTRY GLY FILLED	0-1000PSI	(70 BAR)	£87.83
PG100B01500PSI	BASE ENTRY GLY FILLED	0-1500PSI	(103 BAR)	£87.83
PG100B02000PSI	BASE ENTRY GLY FILLED	0-2000PSI	(138 BAR)	£87.83
PG100B03000PSI	BASE ENTRY GLY FILLED	0-3000PSI	(207 BAR)	£87.83
PG100B04000PSI	BASE ENTRY GLY FILLED	0-4000PSI	(275 BAR)	£87.83
PG100B05000PSI	BASE ENTRY GLY FILLED	0-5000PSI	(344 BAR)	£87.83
PG100B06000PSI	BASE ENTRY GLY FILLED	0-6000PSI	(414 BAR)	£87.83
PG100B08500PSI	BASE ENTRY GLY FILLED	0-8500PSI	(586 BAR)	£87.83
PG100B010000PSI	BASE ENTRY GLY FILLED	0-10000PSI	(690 BAR)	£87.83
PG100B014500PSI	BASE ENTRY GLY FILLED	0-14500PSI	(1000 BAR)	£218.67
PG100B-3060PSI	BASE ENTRY GLY FILLED	-30HG +60PSI	(-1/+4 BAR)	£87.83

OPTIONAL EXTRAS F0R 63mm & 100mm GAUGES		
ORDER CODE	DESCRIPTION	PRICE
CALI63100	CALIBRATION C/W CERTIFICATE	£76.53
PG100COVER	RUBBER PROTECTIVE COVER	£38.27

HYDRAULIC SPECIFICATION 100mm REAR ENTRY PRESSURE GAUGE

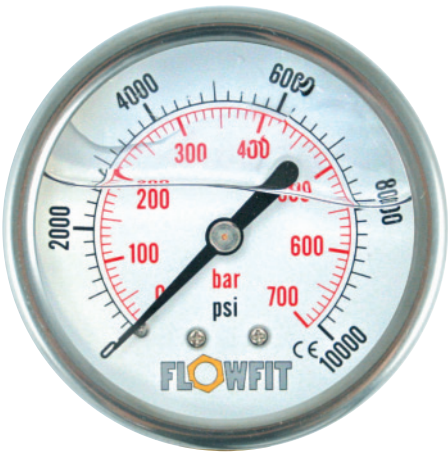

Dual scale psi (outer) in black and bar (inner) in red

Rubber Protective Cover

Options: Throttle Screw, Customised Dials, SS Wetted Parts
Application: For Extended Life, Harsh, and Vibration Environments.
Case: 304 Stainless Steel
Bezel: 304 Stainless Steel
Window: Polycarbonate
Wetted Parts: Brass / Bronze

Damping Fluid: Glycerine
Accuracy Class: ASME B40.1-1991 A GRADE
Ranges: -30"Hg, 1bar Vacuum to 10,000 PSI, 700 bar
Connections: 1/2"BSP back entry with spigot to EN837
Temp. Range: Ambient Temperature –25'C to 60'C

Minimum temperature should not be less than or equal to the freezing point of the process fluid.

ORDER CODE	DESCRIPTION	PRESSURE RANGE		PRICE
PG100R-30HG	REAR ENTRY GLY FILLED	-30HG	(-1 BAR)	£96.21
PG100R015PSI	REAR ENTRY GLY FILLED	0-15PSI	(1 BAR)	£96.21
PG100R030PSI	REAR ENTRY GLY FILLED	0-30PSI	(2 BAR)	£96.21
PG100R060PSI	REAR ENTRY GLY FILLED	0-60PSI	(4 BAR)	£96.21
PG100R0100PSI	REAR ENTRY GLY FILLED	0-100PSI	(7 BAR)	£96.21
PG100R0160PSI	REAR ENTRY GLY FILLED	0-160PSI	(11 BAR)	£96.21
PG100R0200PSI	REAR ENTRY GLY FILLED	0-200PSI	(14 BAR)	£96.21
PG100R0300PSI	REAR ENTRY GLY FILLED	0-300PSI	(21 BAR)	£96.21
PG100R0400PSI	REAR ENTRY GLY FILLED	0-400PSI	(28 BAR)	£96.21
PG100R0500PSI	REAR ENTRY GLY FILLED	0-500PSI	(34 BAR)	£96.21
PG100R0600PSI	REAR ENTRY GLY FILLED	0-600PSI	(41 BAR)	£96.21
PG100R01000PSI	REAR ENTRY GLY FILLED	0-1000PSI	(70 BAR)	£96.21
PG100R01500PSI	REAR ENTRY GLY FILLED	0-1500PSI	(103 BAR)	£96.21
PG100R02000PSI	REAR ENTRY GLY FILLED	0-2000PSI	(138 BAR)	£96.21
PG100R03000PSI	REAR ENTRY GLY FILLED	0-3000PSI	(207 BAR)	£96.21
PG100R04000PSI	REAR ENTRY GLY FILLED	0-4000PSI	(275 BAR)	£96.21
PG100R05000PSI	REAR ENTRY GLY FILLED	0-5000PSI	(344 BAR)	£96.21
PG100R06000PSI	REAR ENTRY GLY FILLED	0-6000PSI	(414 BAR)	£96.21
PG100R08500PSI	REAR ENTRY GLY FILLED	0-8500PSI	(586 BAR)	£96.21
PG100R010000PSI	REAR ENTRY GLY FILLED	0-10000PSI	(690 BAR)	£96.21
PG100R014500PSI	REAR ENTRY GLY FILLED	0-14500PSI	(1000 BAR)	£291.55

OPTIONAL EXTRAS		
ORDER CODE	DESCRIPTION	PRICE
PG100F	3 POSITION FACE FIXING	£8.19
PG100RCLAMPS	REAR CLAMPS TO SUIT 100MM REAR ENTRY	£6.56
PG100COVER	RUBBER PROTECTIVE COVER	£38.27

GAUGE ISOLATOR VALVES

FT290 IN LINE GAUGE ISOLATOR NEEDLE VALVES

The FT 290 isolator needle valves (in line) are normally used to protect the pressure gauge, since they have the double function of dampening pressure surge during opening and of isolating the pressure-gauge entirely.
A rotating (locating) swivel nut allows for accurate pressure gauge orientation.

Suitable for pressure up to 400 bar and temperature from -20 to +100 they can be panel mounted by use of lock nut (G) which may be supplied on request.

ON REQUEST
- Versions with connections Female/Female (01)
- For rigid pipes (04)
- For flexible pipes (05)
- Seals in Viton (V)
- Complete with lock nut (G). Indicate whether KM or hexagonal.

ORDER CODE	PORTS SIZE	MAX WORKING PRESSURE (BAR)	CONNECTION	PRICE
FT290/14	1/4"G	400	FEMALE/FEMALE	£35.37
FT290/12	1/2"G	400	FEMALE/MALE	£71.06

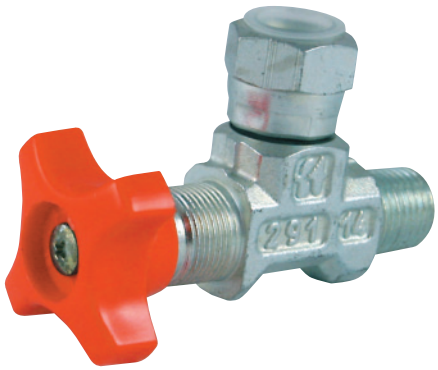

FT291 90° ANGLE GAUGE ISOLATOR NEEDLE VALVES

The FT 291 isolator needle valves (angle) are normally used to protect the pressure gauge since they have the double function of dampening pressure surge during opening and of isolating the pressure-gauge entirely.
A rotating (locating) swivel nut allows for accurate pressure gauge orientation.

Suitable for pressure up to 400 bar and temperature from -20 to +100 they can be panel mounted by use of lock nut (G) which may be supplied on request.

ON REQUEST
- Versions with connections Female/Female (01)
- For rigid pipes (04)
- For flexible pipes (05)
- Seals in Viton (V)
- Complete with lock nut (G). Indicate whether KM or hexagonal.

ORDER CODE	PORTS SIZE	MAX WORKING PRESSURE (BAR)	CONNECTION	PRICE
FT291-14	1/4"G	400	FEMALE/MALE	£35.37

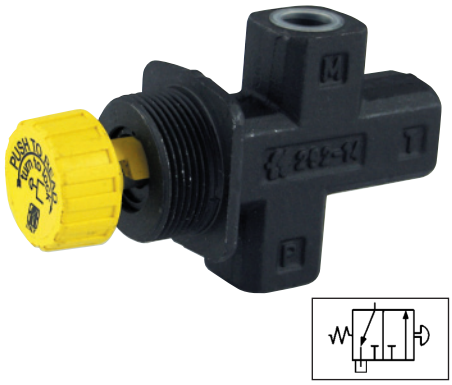

FT292 PUSH-BUTTON GAUGE ISOLATOR VALVES

The new FT 292 push-button isolator valves are used to protect pressure-gauges, since they have the double function of dampening the pressure surge during opening and of isolating the pressure-gauge entirely.
A reading is obtained by depressing the button.

Releasing the button shuts off the flow to the gauge with residual pressure being automatically drained.
The button can be locked to give a continuos reading.
The maximum release pressure is 50 Kg/sq cm.
Panel mounting facility.
Panel mounting fixtures are supplied only if expressly requested, indicate whether KM or hexagonal.
Complete with connector FT 299, they allow for full location orientation for ease of reading.
They may be used for working pressures up to 400 bar.

ORDER CODE	PORTS SIZE	MAX WORKING PRESSURE (BAR)	PRICE
FT292	1/4"	400	£75.73

GAUGE ISOLATOR VALVES

FT299 PRESSURE GAUGE SWIVEL ADAPTORS - 400 BAR RATED

Adaptors FT 299 allow the connection of a pressure gauge direct to the system.
They provide for correct dial orientation. The adaptor has a built in 'O-ring' seal for use with pressure gauges with sealing nipple to DIN 16288.

The oil flow is restricted to the gauge dampen any pressure shock surges.
A gasket, supplied as current product and inserted in the rotating nut, impedes any blow-by between fitting and pressure gauge.

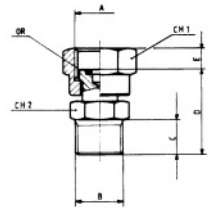

ORDER CODE	PORT A	PORT B	MAX WORKING PRESSURE (BAR)	PRICE
FT299-88	1/8"	1/8"	400	£15.72
FT299-44	1/4"	1/4"	400	£11.91
FT299-42	1/4"	1/2"	400	£13.76
FT299-24	1/2"	1/4"	400	£20.83
FT299-22	1/2"	1/2"	400	£30.14

FLOWFIT HYDRAULIC QUICK RELEASE COUPLINGS

FLOWFIT HYDRAULIC ISO A QUICK RELEASE COUPLINGS MALE & FEMALE ENDS.....609
FLOWFIT HYDRAULIC FLAT FACE QUICK RELEASE COUPLINGS MALE & FEMALE ENDS.....610

FLOWFIT®

FLOWFIT HYDRAULIC ISO A QUICK RELEASE COUPLINGS MALE & FEMALE ENDS

ISO A QUICK RELEASE COUPLING PRICE LIST

PRODUCT REFERENCE	DESCRIPTION	RRP
QRCISOAF14	HYDRAULIC ISO A QUICK RELEASE COUPLING FEMALE 1/4" BSP, DN04, ISO 6.3, 315 BAR RATED, 12 L/MIN	£4.22
QRCISOAM14	HYDRAULIC ISO A QUICK RELEASE COUPLING MALE 1/4" BSP, DN04, ISO 6.3, 315 BAR RATED, 12 L/MIN	£2.25
QRCISOAF38	HYDRAULIC ISO A QUICK RELEASE COUPLING FEMALE 3/8" BSP, DN06, ISO 10, 315 BAR RATED, 23 L/MIN	£4.56
QRCISOAM38	HYDRAULIC ISO A QUICK RELEASE COUPLING MALE 3/8" BSP, DN06, ISO 10, 315 BAR RATED, 23 L/MIN	£2.14
QRCISOAF12	HYDRAULIC ISO A QUICK RELEASE COUPLING FEMALE 1/2" BSP, DN08, ISO 12.5, 250 BAR RATED,45 L/MIN	£5.87
QRCISOAM12	HYDRAULIC ISO A QUICK RELEASE COUPLING MALE 1/2" BSP, DN08, ISO 12.5, 250 BAR RATED,45 L/MIN	£2.16
QRCISOAF34	HYDRAULIC ISO A QUICK RELEASE COUPLING FEMALE 3/4" BSP, DN12, ISO 20, 250 BAR RATED, 106 L/MIN	£10.30
QRCISOAM34	HYDRAULIC ISO A QUICK RELEASE COUPLING MALE 3/4" BSP, DN12, ISO 20, 250 BAR RATED, 106 L/MIN	£5.43
QRCISOAF1	HYDRAULIC ISO A QUICK RELEASE COUPLING FEMALE 1" BSP, DN16, ISO 25, 200 BAR RATED, 189 L/MIN	£17.26
QRCISOAM1	HYDRAULIC ISO A QUICK RELEASE COUPLING MALE 1" BSP, DN16, ISO 25, 200 BAR RATED, 189 L/MIN	£8.37
QRCISOAF114	HYDRAULIC ISO A QUICK RELEASE COUPLING FEMALE 1 1/4" BSP, DN20, ISO 31.5, 200 BAR RATED, 288 L/MIN	£28.05
QRCISOAM114	HYDRAULIC ISO A QUICK RELEASE COUPLING MALE 1 1/4" BSP, DN20, ISO 31.5, 200 BAR RATED, 288 L/MIN	£18.02
QRCISOAF112	HYDRAULIC ISO A QUICK RELEASE COUPLING FEMALE 1 1/2 BSP, DN24, ISO 40, 160 BAR RATED, 379 L/MIN	£82.68
QRCISOAM112	HYDRAULIC ISO A QUICK RELEASE COUPLING MALE 1 1/2" BSP, DN24, ISO 40, 160 BAR RATED, 379 L/MIN	£40.28
QRCISOAF2	HYDRAULIC ISO A QUICK RELEASE COUPLING FEMALE 2" BSP, DN32, ISO 50, 200 BAR RATED 757 L/MIN	£146.28
QRCISOAM2	HYDRAULIC ISO A QUICK RELEASE COUPLING MALE 2" BSP, DN32, ISO 50, 200 BAR RATED 757 L/MIN	£68.90

ACCESSORIES PRICE LIST

PRODUCT REFERENCE	DESCRIPTION	RRP
PPQRCISOAF14	PLASTIC DUST PLUG FOR 1/4"BSP, DN04 ISO A FEMALE QRC	£0.85
PPQRCISOAM14	PLASTIC DUST CAP FOR 1/4"BSP, DN04 ISO A MALE QRC	£0.85
PPQRCISOAF38	PLASTIC DUST PLUG FOR 3/8"BSP, DN06 ISO A FEMALE QRC	£1.02
PPQRCISOAM38	PLASTIC DUST CAP FOR 3/8"BSP, DN06 ISO A MALE QRC	£1.02
PPQRCISOAF12	PLASTIC DUST PLUG FOR 1/2"BSP, DN08 ISO A FEMALE QRC	£1.02
PPQRCISOAM12	PLASTIC DUST CAP FOR 1/2"BSP, DN08 ISO A MALE QRC	£1.02
PPQRCISOAF34	PLASTIC DUST PLUG FOR 3/4"BSP, DN12 ISO A FEMALE QRC	£1.10
PPQRCISOAM34	PLASTIC DUST CAP FOR 3/4"BSP, DN12 ISO A MALE QRC	£1.10
PPQRCISOAF1	PLASTIC DUST PLUG FOR 1"BSP, DN16 ISO A FEMALE QRC	£1.95
PPQRCISOAM1	PLASTIC DUST CAP FOR 1"BSP, DN16 ISO A MALE QRC	£1.95
ALQRCISOAF114	ALUMINIUM DUST PLUG FOR 1 1/4"BSP, DN20 ISO A FEMALE QRC	£21.86
ALQRCISOAM114	ALUMINIUM DUST CAP FOR 1 1/4"BSP, DN20 ISO A MALE QRC	£20.41
ALQRCISOAF112	ALUMINIUM DUST PLUG FOR 1 1/2"BSP, DN24 ISO A FEMALE QRC	£22.97
ALQRCISOAM112	ALUMINIUM DUST CAP FOR 1 1/2"BSP, DN24 ISO A MALE QRC	£22.74
ALQRCISOAF2	ALUMINIUM DUST PLUG FOR 2"BSP, DN32 ISO A FEMALE QRC	£35.38
ALQRCISOAM2	ALUMINIUM DUST CAP FOR 2"BSP, DN32 ISO A MALE QRC	£34.80

SEE NEW PRODUCTS SECTION PAGE NP83 FOR FULL RANGE AND SPECIFICATIONS

FLOWFIT HYDRAULIC FLAT FACE QUICK RELEASE COUPLINGS MALE & FEMALE ENDS

FLAT FACE QUICK RELEASE COUPLING PRICE LIST

PRODUCT REFERENCE	DESCRIPTION	RRP
QRCFFF14	HYDRAULIC FLAT FACE QUICK RELEASE COUPLING FEMALE 1/4" BSP, DN04, ISO 6.3, 400 BAR RATED, 12 L/MIN	£12.97
QRCFFM14	HYDRAULIC FLAT FACE QUICK RELEASE COUPLING MALE 1/4" BSP, DN04, ISO 6.3, 400 BAR RATED, 12 L/MIN	£5.70
QRCFFF38	HYDRAULIC FLAT FACE QUICK RELEASE COUPLING FEMALE 3/8" BSP, DN06, ISO10, 350 BAR RATED, 23 L/MIN	£16.96
QRCFFM38	HYDRAULIC FLAT FACE QUICK RELEASE COUPLING MALE 3/8" BSP, DN06, ISO10, 350 BAR RATED, 23 L/MIN	£8.48
QRCFFF12-38	HYDRAULIC FLAT FACE QUICK RELEASE COUPLING FEMALE 1/2" BSP, DN06, ISO10, 350 BAR RATED, 23 L/MIN	£16.96
QRCFFM12-38	HYDRAULIC FLAT FACE QUICK RELEASE COUPLING MALE 1/2" BSP, DN06, ISO10, 350 BAR RATED, 23 L/MIN	£8.48
QRCFFF12	HYDRAULIC FLAT FACE QUICK RELEASE COUPLING FEMALE 1/2" BSP, DN08, ISO 12.5, 350 BAR RATED, 45 L/MIN	£21.75
QRCFFM12	HYDRAULIC FLAT FACE QUICK RELEASE COUPLING MALE 1/2" BSP, DN08, ISO 12.5, 350 BAR RATED, 45 L/MIN	£10.71
QRCFFF34-12	HYDRAULIC FLAT FACE QUICK RELEASE COUPLING FEMALE 3/4" BSP, DN08, ISO 12.5, 350 BAR RATED, 45 L/MIN	£21.75
QRCFFM34-12	HYDRAULIC FLAT FACE QUICK RELEASE COUPLING MALE 3/4" BSP, DN08, ISO 12.5, 350 BAR RATED, 45 L/MIN	£10.71
QRCFFF34	HYDRAULIC FLAT FACE QUICK RELEASE COUPLING FEMALE 3/4" BSP, DN12, ISO 20, 350 BAR RATED, 100 L/MIN	£36.44
QRCFFM34	HYDRAULIC FLAT FACE QUICK RELEASE COUPLING MALE 3/4" BSP, DN12, ISO 20, 350 BAR RATED, 100 L/MIN	£22.81
QRCFFF1-34	HYDRAULIC FLAT FACE QUICK RELEASE COUPLING FEMALE 1" BSP, DN12, ISO 20, 350 BAR RATED, 100 L/MIN	£36.44
QRCFFM1-34	HYDRAULIC FLAT FACE QUICK RELEASE COUPLING MALE 1" BSP, DN12, ISO 20, 350 BAR RATED, 100 L/MIN	£22.81
QRCFFF1	HYDRAULIC FLAT FACE QUICK RELEASE COUPLING FEMALE 1" BSP, DN16, ISO 25, 350 BAR RATED, 189 L/MIN	£53.58
QRCFFM1	HYDRAULIC FLAT FACE QUICK RELEASE COUPLING MALE 1" BSP, DN16, ISO 25, 350 BAR RATED, 189 L/MIN	£29.04
QRCFFF1620114	HYDRAULIC FLAT FACE QUICK RELEASE COUPLING FEMALE 1 1/4" BSP, DN16/DN20, ISO 25, 350 BAR RATED 189 L/MIN	£63.76
QRCFFM1620114	HYDRAULIC FLAT FACE QUICK RELEASE COUPLING MALE 1 1/4" BSP, DN16/DN20, ISO 25, 350 BAR RATED 189 L/MIN	£29.04
QRCFFF24112	HYDRAULIC FLAT FACE QUICK RELEASE COUPLING FEMALE 1 1/2" BSP, DN24, ISO 40, 250 BAR, 379 L/MIN	£202.64
QRCFFM24112	HYDRAULIC FLAT FACE QUICK RELEASE COUPLING MALE 1 1/2" BSP, DN24, ISO 40, 250 BAR, 379 L/MIN	£104.03
QRCFFF322	HYDRAULIC FLAT FACE QUICK RELEASE COUPLING FEMALE 2" BSP, DN32, 250 BAR RATED, 758 L/MIN	£394.66
QRCFFM322	HYDRAULIC FLAT FACE QUICK RELEASE COUPLING MALE 2" BSP, DN32, 250 BAR RATED, 758 L/MIN	£209.29

ACCESSORIES PRICE LIST

PRODUCT REFERENCE	DESCRIPTION	RRP
PPQRCFFF14	PLASTIC DUST CAP FOR 1/4"BSP, DN04 FLAT FACE FEMALE QRC	£1.02
PPQRCFFM14	PLASTIC DUST CAP FOR 1/4"BSP,DN04 FLAT FACE MALE QRC	£1.02
PPQRCFFF38	PLASTIC DUST CAP FOR 3/8"BSP, DN06 FLAT FACE FEMALE QRC AND 1/2"BSP, DN06 FLAT FACE FEMALE QRC	£1.10
PPQRCFFM38	PLASTIC DUST CAP FOR 3/8"BSP, DN06 FLAT FACE MALE QRC AND 1/2"BSP, DN06 FLAT FACE MALE QRC	£1.10
PPQRCFFF12	PLASTIC DUST CAP FOR 1/2"BSP, DN08 FLAT FACE FEMALE QRC AND 3/4"BSP, DN08 FLAT FACE FEMALE QRC	£1.27
PPQRCFFM12	PLASTIC DUST CAP FOR 1/2"BSP, DN08 FLAT FACE MALE QRC AND 3/4"BSP, DN08 FLAT FACE MALE QRC	£1.27
PPQRCFFF34	PLASTIC DUST CAP FOR 3/4"BSP, DN12 FLAT FACE FEMALE QRC AND 1"BSP, DN12 FLAT FACE FEMALE QRC	£1.48
PPQRCFFM34	PLASTIC DUST CAP FOR 3/4"BSP, DN12 FLAT FACE MALE QRC AND 1"BSP, DN12 FLAT FACE MALE QRC	£1.48
PPQRCFFF1	PLASTIC DUST CAP FOR 1"BSP, DN16 FLAT FACE FEMALE QRC	£2.25
PPQRCFFM1	PLASTIC DUST CAP FOR 1"BSP, DN16 FLAT FACE MALE QRC	£2.25

SEE NEW PRODUCTS SECTION PAGE NP83 FOR FULL RANGE AND SPECIFICATIONS

HYDRAULIC ADAPTORS

MALE x MALE ADAPTORS.....612
MALE x SWIVEL FEMALE ADAPTORS.....616
SWIVEL FEMALE x SWIVEL FEMALE ADAPTORS.....617
MALE x FIXED FEMALE & FIXED FEMALE/FEMALE ADAPTORS.....617
TEES & CROSS ADAPTORS.....618
PLUGS, CAPS & CRIMP NUTS.....619
SWEPTS, PUSH-INS, HOSE-TAILS & FERRULES.....620
BONDED SEALS.....621

FLOWFIT

MALE x MALE ADAPTORS

FLOWFIT

BSP MALE x BSP MALE

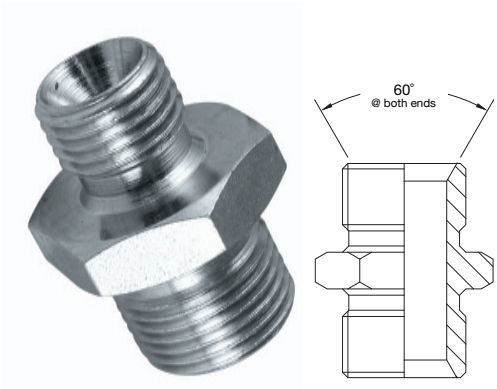

PART NO.	DESCRIPTION	PRICE
BUR00001	1/8 bsp x 1/8 bsp	£1.76
BUR00002	1/8 bsp x 1/4 bsp	£1.86
BUR00003	1/8 bsp x 3/8 bsp	£2.37
BUR00004	1/8 bsp x 1/2 bsp	£3.12
BUR00005	1/4 bsp x 1/4 bsp	£1.76
BUR00006	1/4 bsp x 3/8 bsp	£2.00
BUR00007	1/4 bsp x 1/2 bsp	£2.46
BUR00008	1/4 bsp x 5/8 bsp	£4.75
BUR00009	1/4 bsp x 3/4 bsp	£5.86
BUR00010	1/4 bsp x 1 bsp	£9.14
BUR00011	1/4 bsp x 1-1/4 bsp	£31.04
BUR00012	1/4 bsp x 1-1/2 bsp	£37.66
BUR00013	1/4 bsp x 2 bsp	£51.54
BUR00014	3/8 bsp x 3/8 bsp	£2.00
BUR00015	3/8 bsp x 1/2 bsp	£2.46
BUR00016	3/8 bsp x 5/8 bsp	£3.47
BUR00017	3/8 bsp x 3/4 bsp	£4.45
BUR00018	3/8 bsp x 1 bsp	£9.14
BUR00019	3/8 bsp x 1-1/4 bsp	£25.56
BUR00020	3/8 bsp x 1-1/2 bsp	£29.49
BUR00060	3/8 bsp x 2 bsp	£51.54
BUR00021	1/2 bsp x 1/2 bsp	£2.46
BUR00022	1/2 bsp x 5/8 bsp	£3.26
BUR00023	1/2 bsp x 3/4 bsp	£4.24
BUR00024	1/2 bsp x 1 bsp	£7.36
BUR00025	1/2 bsp x 1-1/4 bsp	£25.56
BUR00026	1/2 bsp x 1-1/2 bsp	£31.20
BUR00027	1/2 bsp x 2 bsp	£39.35
BUR00028	5/8 bsp x 5/8 bsp	£3.26
BUR00029	5/8 bsp x 3/4 bsp	£4.24
BUR00030	5/8 bsp x 1 bsp	£7.49
BUR00031	5/8 bsp x 1-1/4 bsp	£25.56
BUR00032	3/4 bsp x 3/4 bsp	£4.24
BUR00033	3/4 bsp x 1 bsp	£7.36
BUR00034	3/4 bsp x 1-1/4 bsp	£24.51
BUR00035	3/4 bsp x 1-1/2 bsp	£28.30
BUR00036	3/4 bsp x 2 bsp	£37.87
BUR00037	1 bsp x 1 bsp	£7.12
BUR00038	1 bsp x 1-1/4 bsp	£16.48
BUR00039	1 bsp x 1-1/2 bsp	£21.08
BUR00040	1 bsp x 2 bsp	£33.11
BUR00051	1 bsp x 2-1/2 bsp	£80.58
BUR00042	1-1/4 bsp x 1-1/4 bsp	£15.15
BUR00043	1-1/4 bsp x 1-1/2 bsp	£19.61
BUR00044	1-1/4 bsp x 2 bsp	£33.11
BUR00041	1-1/4 bsp x 2-1/2 bsp	£80.58
BUR00045	1-1/2 bsp x 1-1/2 bsp	£18.49
BUR00046	1-1/2 bsp x 1-3/4 bsp	£23.75
BUR00047	1-1/2 bsp x 2 bsp	£29.93
BUR00048	1-1/2 bsp x 2-1/2 bsp	£80.58
BUR00057	1-3/4 bsp x 1-3/4 bsp	£23.75
BUR00049	1-3/4 bsp x 2 bsp	£33.11
BUR00058	1-3/4 bsp x 2-1/2 bsp	#VALUE!
BUR00050	2 bsp x 2 bsp	£29.93
BUR00053	2 bsp x 2-1/2 bsp	£80.58
BUR00056	2 bsp x 3 bsp	£156.41
BUR00063	2 bsp x 4 bsp	£291.17
BUR00052	2-1/2 bsp x 2-1/2 bsp	£70.18
BUR00054	2-1/2 bsp x 3 bsp	£107.56
BUR00055	3 bsp x 3 bsp	£107.56
BUR00065	3 bsp x 3-1/2 bsp	#VALUE!
BUR00064	3 bsp x 4 bsp	£291.17
BUR00061	3-1/2 bsp x 4 bsp	£245.04
BUR00062	4 bsp x 4 bsp	£276.02

BSP MALE x BSP MALE BULKHEAD WITH LOCKNUT

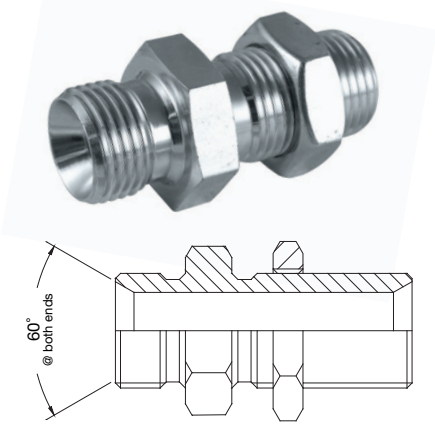

PART NO.	DESCRIPTION	PRICE
BUR09500	1/8 bsp	£7.06
BUR09501	1/4 bsp	£6.17
BUR09502	3/8 bsp	£6.69
BUR09503	1/2 bsp	£7.27
BUR09504	5/8 bsp	£8.41
BUR09506	3/4 bsp	£12.55
BUR09507	1 bsp	£17.45
BUR09508	1-1/4 bsp	£34.16
BUR09509	1-1/2 bsp	£64.69
BUR09510	2 bsp	£88.68
BUR09516	2-1/2 bsp	£178.72
BUR09517	3 bsp	£288.12
BUR09512	1/4 bsp x 3/8 bsp	£9.50
BUR09513	3/8 bsp x 1/4 bsp	£9.50
BUR09505	3/8 bsp x 1/2 bsp	£13.96
BUR09511	1/2 bsp x 3/8 bsp	£13.96
BUR09514	1/2 bsp x 3/4 bsp	£25.09
BUR09515	3/4 bsp x 1/2 bsp	£24.74
BUR09521	1-1/2 bsp x 1 bsp	£95.59

BSP MALE x BSP MALE EXTENDED BULKHEAD WITH LOCKNUT

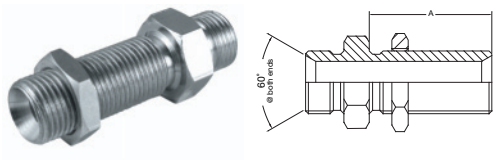

PART NO.	DESCRIPTION	PRICE
BUR12201	1/4 bsp	£12.62
BUR12202	3/8 bsp	£15.07
BUR12203	1/2 bsp	£15.52
BUR12205	5/8 bsp	£19.75
BUR12204	3/4 bsp	£20.87
BUR12206	1 bsp	£40.39
BUR12216	1-1/2 bsp	£POA
BUR12211	3/8 bsp x 1/2 bsp	£15.59
BUR12210	1/2 bsp x 3/8 bsp	£15.59
BUR12215	3/4 bsp x 1/2 bsp	£20.87

BSP MALE x BSPT MALE

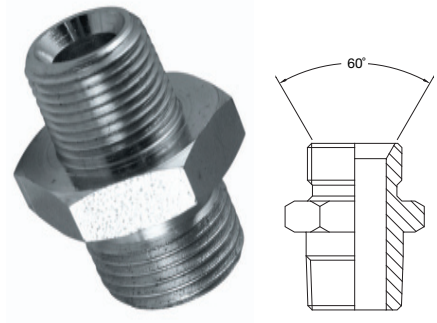

PART NO.	DESCRIPTION	PRICE
BUR00301	1/8 bsp x 1/8 bspt	£1.94
BUR00302	1/8 bsp x 1/4 bspt	£2.23
BUR00303	1/8 bsp x 3/8 bspt	£2.82
BUR00304	1/8 bsp x 1/2 bspt	£6.97
BUR00305	1/4 bsp x 1/8 bspt	£2.23
BUR00306	1/4 bsp x 1/4 bspt	£1.94
BUR00307	1/4 bsp x 3/8 bspt	£2.46
BUR00308	1/4 bsp x 1/2 bspt	£3.41
BUR00310	1/4 bsp x 3/4 bspt	£5.86
BUR00311	3/8 bsp x 1/8 bspt	£3.41
BUR00312	3/8 bsp x 1/4 bspt	£2.75
BUR00313	3/8 bsp x 3/8 bspt	£2.47
BUR00314	3/8 bsp x 1/2 bspt	£3.41
BUR00315	3/8 bsp x 5/8 bspt	£4.75
BUR00316	3/8 bsp x 3/4 bspt	£5.71
BUR00317	3/8 bsp x 1 bspt	£10.10
BUR00368	3/8 bsp x 1-1/2 bspt	£18.27
BUR00318	1/2 bsp x 1/8 bspt	£4.45
BUR00319	1/2 bsp x 1/4 bspt	£3.41
BUR00320	1/2 bsp x 3/8 bspt	£3.12
BUR00321	1/2 bsp x 1/2 bspt	£2.75
BUR00322	1/2 bsp x 5/8 bspt	£3.86
BUR00323	1/2 bsp x 3/4 bspt	£4.67
BUR00324	1/2 bsp x 1 bspt	£7.95
BUR00360	1/2 bsp x 1-1/4 bspt	£18.27
BUR00325	5/8 bsp x 1/4 bspt	£4.75
BUR00326	5/8 bsp x 3/8 bspt	£5.18
BUR00327	5/8 bsp x 1/2 bspt	£3.71
BUR00328	5/8 bsp x 5/8 bspt	£3.71
BUR00329	5/8 bsp x 3/4 bspt	£5.86
BUR00330	3/4 bsp x 1/4 bspt	£6.75
BUR00331	3/4 bsp x 3/8 bspt	£6.23
BUR00332	3/4 bsp x 1/2 bspt	£4.60
BUR00333	3/4 bsp x 5/8 bspt	£5.71
BUR00334	3/4 bsp x 3/4 bspt	£4.30
BUR00335	3/4 bsp x 1 bspt	£7.95
BUR00336	3/4 bsp x 1-1/4 bspt	£18.27
BUR00365	3/4 bsp x 1-1/2 bspt	£28.81
BUR00367	3/4 bsp x 2 bspt	£151.59
BUR00337	1 bsp x 1/4 bspt	£28.81
BUR00361	1 bsp x 3/8 bspt	£10.10
BUR00338	1 bsp x 1/2 bspt	£7.95
BUR00339	1 bsp x 3/4 bspt	£7.95
BUR00340	1 bsp x 1 bspt	£7.95
BUR00341	1 bsp x 1-1/4 bspt	£17.45
BURV00342	1 bsp x 1-1/2 bspt	£20.94
BUR00343	1 bsp x 2 bspt	£37.87
BUR00344	1-1/4 bsp x 3/4 bspt	£18.63
BUR00345	1-1/4 bsp x 1 bspt	£18.63
BUR00346	1-1/4 bsp x 1-1/4 bspt	£16.86
BUR00347	1-1/4 bsp x 1-1/2 bspt	£21.76
BUR00348	1-1/4 bsp x 2 bspt	£35.78
BUR00349	1-1/2 bsp x 1 bspt	£25.24
BUR00350	1-1/2 bsp x 1-1/4 bspt	£21.76
BUR00351	1-1/2 bsp x 1-1/2 bspt	£20.94
BUR00352	1-1/2 bsp x 2 bspt	£35.49
BUR00353	2 bsp x 1 bspt	£36.24
BUR00354	2 bsp x 1-1/4 bspt	£36.24
BUR00355	2 bsp x 1-1/2 bspt	£35.49
BUR00356	2 bsp x 2 bspt	£35.49
BUR00363	2 bsp x 2-1/2 bspt	£203.45
BUR00362	2 bsp x 3 bspt	£211.40
BUR00359	2-1/2 bsp x 2 bspt	£204.41
BUR00357	2-1/2 bsp x 2-1/2 bspt	£187.50
BUR00364	2-1/2 bsp x 3 bspt	£211.40
BUR00369	3 bsp x 2-1/2 bspt	#VALUE!
BUR00358	3 bsp x 3 bspt	£211.40
BUR00366	4 bsp x 4 bspt	£244.89

50% OFF ALL PRICES

BSP MALE x JIC MALE

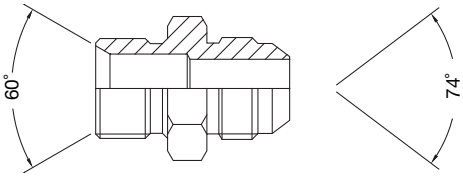

PART NO.	DESCRIPTION	PRICE
BUR01164	1/8 bsp x 3/8 jic	£3.41
BUR01101	1/8 bsp x 7/16 jic	£2.75
BUR01102	1/8 bsp x 1/2 jic	£2.60
BUR01100	1/8 bsp x 9/16 jic	£3.19
BUR01160	1/4 bsp x 5/16 jic	£5.71
BUR01163	1/4 bsp x 3/8 jic	£14.19
BUR01103	1/4 bsp x 7/16 jic	£1.94
BUR01104	1/4 bsp x 1/2 jic	£2.37
BUR01105	1/4 bsp x 9/16 jic	£2.23
BUR01106	1/4 bsp x 3/4 jic	£3.26
BUR01107	1/4 bsp x 7/8 jic	£5.13
BUR01155	1/4 bsp x 1-1/16 jic	£9.73
BUR01168	1/4 bsp x 1-3/16 jic	£9.73
BUR01108	1/4 bsp x 1-5/16 jic	£9.73
BUR01109	3/8 bsp x 7/16 jic	£2.37
BUR01110	3/8 bsp x 1/2 jic	£2.37
BUR01111	3/8 bsp x 9/16 jic	£2.23
BUR01112	3/8 bsp x 3/4 jic	£2.75
BUR01113	3/8 bsp x 7/8 jic	£3.26
BUR01114	3/8 bsp x 1-1/16 jic	£5.13
BUR01115	3/8 bsp x 1-5/16 jic	£8.10
BUR01116	1/2 bsp x 7/16 jic	£3.41
BUR01117	1/2 bsp x 1/2 jic	£3.41
BUR01118	1/2 bsp x 9/16 jic	£2.82
BUR01119	1/2 bsp x 3/4 jic	£2.75
BUR01120	1/2 bsp x 7/8 jic	£3.26
BUR01121	1/2 bsp x 1-1/16 jic	£4.24
BUR01122	1/2 bsp x 1-5/16 jic	£8.10
BUR01161	1/2 bsp x 1-7/8 jic	£POA
BUR01123	5/8 bsp x 9/16 jic	£5.13
BUR01124	5/8 bsp x 3/4 jic	£5.13
BUR01125	5/8 bsp x 7/8 jic	£5.13
BUR01126	5/8 bsp x 1-1/16 jic	£6.54
BUR01127	5/8 bsp x 1-3/16 jic	£7.27
BUR01128	5/8 bsp x 1-5/16 jic	£5.43
BUR01129	3/4 bsp x 7/16 jic	£5.43
BUR01130	3/4 bsp x 1/2 jic	£5.43
BUR01150	3/4 bsp x 9/16 jic	£5.43
BUR01131	3/4 bsp x 3/4 jic	£4.60
BUR01132	3/4 bsp x 7/8 jic	£4.60
BUR01133	3/4 bsp x 1-1/16 jic	£4.30
BUR01134	3/4 bsp x 1-3/16 jic	£6.54
BUR01135	3/4 bsp x 1-5/16 jic	£7.27
BUR01148	3/4 bsp x 1-5/8 jic	£19.93
BUR01158	3/4 bsp x 1-7/8 jic	£27.71
BUR01169	1 bsp x 9/16 jic	£12.26
BUR01136	1 bsp x 3/4 jic	£8.41
BUR01137	1 bsp x 7/8 jic	£8.41
BUR01138	1 bsp x 1-1/16 jic	£7.27
BUR01139	1 bsp x 1-3/16 jic	£7.27
BUR01140	1 bsp x 1-5/16 jic	£7.27
BUR01141	1 bsp x 1-5/8 jic	£18.86
BUR01156	1 bsp x 1-7/8 jic	£27.71
BUR01151	1 bsp x 2-1/2 jic	£54.91
BUR01142	1-1/4 bsp x 1-1/16 jic	£18.86
BUR01143	1-1/4 bsp x 1-5/16 jic	£18.86
BUR01144	1-1/4 bsp x 1-5/8 jic	£18.86
BUR01145	1-1/4 bsp x 1-7/8 jic	£27.71
BUR01152	1-1/4 bsp x 2-1/2 jic	£55.18
BUR01159	1-1/2 bsp x 1-1/16 jic	£27.71
BUR01149	1-1/2 bsp x 1-5/16 jic	£27.71
BUR01154	1-1/2 bsp x 1-5/8 jic	£27.71
BUR01146	1-1/2 bsp x 1-7/8 jic	£27.71
BUR01153	1-1/2 bsp x 2-1/2 jic	£55.18
BUR01162	2 bsp x 1-5/16 jic	£POA
BUR01175	2 bsp x 1-5/8 jic	£37.93
BUR01157	2 bsp x 1-7/8 jic	£41.81
BUR01147	2 bsp x 2-1/2 jic	£41.81
BUR01165	3 bsp x 1-7/8 jic	£POA
BUR01166	3 bsp x 2-1/2 jic	£POA
BUR01167	3-1/2 bsp x 2-1/2 jic	£POA

NPTF MALE x NPTF MALE

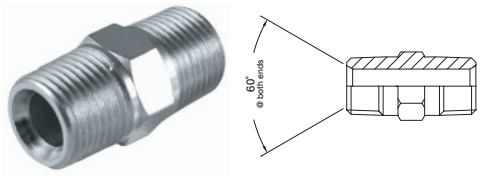

PART NO.	DESCRIPTION	PRICE
BUR00675	1/8 nptf x 1/8 nptf	£3.26
BUR00676	1/8 nptf x 1/4 nptf	£3.26
BUR00700	1/8 nptf x 3/8 nptf	£3.94
BUR00704	1/8 nptf x 1/2 nptf	£4.75
BUR00677	1/4 nptf x 1/4 nptf	£3.26
BUR00678	1/4 nptf x 3/8 nptf	£3.64
BUR00681	1/4 nptf x 1/2 nptf	£3.94
BUR00684	1/4 nptf x 3/4 nptf	£9.65
BUR00699	1/4 nptf x 1 nptf	£13.74
BUR00679	3/8 nptf x 3/8 nptf	£3.64
BUR00680	3/8 nptf x 1/2 nptf	£3.94
BUR00685	3/8 nptf x 3/4 nptf	£9.65
BUR00708	3/8 nptf x 1 nptf	£47.38
BUR00682	1/2 nptf x 1/2 nptf	£3.94
BUR00686	1/2 nptf x 3/4 nptf	£6.97
BUR00690	1/2 nptf x 1 nptf	£4.45
BUR00705	1/2 nptf x 1-1/4 nptf	£25.24
BUR00702	1/2 nptf x 1-1/2 nptf	£31.04
BUR00688	3/4 nptf x 3/4 nptf	£22.28
BUR00691	3/4 nptf x 1 nptf	£8.01
BUR00689	3/4 nptf x 1-1/4 nptf	£8.46
BUR00695	3/4 nptf x 1-1/2 nptf	£25.24
BUR00692	1 nptf x 1 nptf	£8.01
BUR00693	1 nptf x 1-1/4 nptf	£19.30
BUR00701	1 nptf x 1-1/2 nptf	£25.56
BUR00712	1 nptf x 2 nptf	£POA
BUR00694	1-1/4 nptf x 1-1/4 nptf	£19.30
BUR00696	1-1/4 nptf x 1-1/2 nptf	£25.92
BUR00706	1-1/4 nptf x 2 nptf	£35.94
BUR00697	1-1/2 nptf x 1-1/2 nptf	£25.56
BUR00703	1-1/2 nptf x 2 nptf	£35.94
BUR00714	1-1/2 nptf x 3 nptf	£POA
BUR00698	2 nptf x 2 nptf	£35.88
BUR00717	2 nptf x 2-1/2 nptf	£231.82
BUR00711	2 nptf x 3 nptf	£222.98
BUR00707	2-1/2 nptf x 2-1/2 nptf	£201.60
BUR00713	2-1/2 nptf x 3 nptf	£224.39
BUR00709	3 nptf x 3 nptf	£203.29
BUR00710	4 nptf x 4 nptf	£244.89

NPTF MALE x BSP MALE

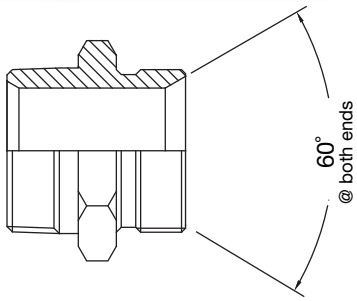

PART NO.	DESCRIPTION	PRICE
BUR00600	1/8 nptf x 1/8 bsp	£2.00
BUR00601	1/8 nptf x 1/4 bsp	£2.46
BUR00602	1/8 nptf x 3/8 bsp	£3.12
BUR00603	1/8 nptf x 1/2 bsp	£4.60
BUR00604	1/4 nptf x 1/8 bsp	£3.64
BUR00605	1/4 nptf x 1/4 bsp	£2.14
BUR00606	1/4 nptf x 3/8 bsp	£2.82
BUR00607	1/4 nptf x 1/2 bsp	£3.41
BUR00608	1/4 nptf x 3/4 bsp	£6.17
BUR00650	1/4 nptf x 1 bsp	£10.40
BUR00609	3/8 nptf x 1/8 bsp	£3.64
BUR00610	3/8 nptf x 1/4 bsp	£2.75
BUR00611	3/8 nptf x 3/8 bsp	£2.37
BUR00612	3/8 nptf x 1/2 bsp	£3.41
BUR00613	3/8 nptf x 5/8 bsp	£5.57
BUR00614	3/8 nptf x 3/4 bsp	£5.71
BUR00660	3/8 nptf x 1 bsp	£10.46
BUR00656	1/2 nptf x 1/8 bsp	£3.41
BUR00615	1/2 nptf x 1/4 bsp	£3.40
BUR00616	1/2 nptf x 3/8 bsp	£3.41
BUR00617	1/2 nptf x 1/2 bsp	£2.60
BUR00618	1/2 nptf x 5/8 bsp	£5.57
BUR00619	1/2 nptf x 3/4 bsp	£5.57
BUR00620	1/2 nptf x 1 bsp	£8.31
BUR00621	3/4 nptf x 1/4 bsp	£6.38
BUR00622	3/4 nptf x 3/8 bsp	£5.64
BUR00623	3/4 nptf x 1/2 bsp	£5.13
BUR00624	3/4 nptf x 5/8 bsp	£6.97
BUR00625	3/4 nptf x 3/4 bsp	£4.30
BUR00626	3/4 nptf x 1 bsp	£8.31
BUR00627	3/4 nptf x 1-1/4 bsp	£16.48
BUR00647	3/4 nptf x 1-1/2 bsp	£37.87
BUR00628	1 nptf x 1/4 bsp	£13.74
BUR00649	1 nptf x 3/8 bsp	£10.92
BUR00629	1 nptf x 1/2 bsp	£8.31
BUR00630	1 nptf x 3/4 bsp	£8.31
BUR00631	1 nptf x 1 bsp	£8.10
BUR00632	1 nptf x 1-1/4 bsp	£17.97
BUR00633	1 nptf x 1-1/2 bsp	£20.57
BUR00634	1 nptf x 2 bsp	£37.87
BUR00635	1-1/4 nptf x 3/4 bsp	£16.48
BUR00636	1-1/4 nptf x 1 bsp	£17.76
BUR00637	1-1/4 nptf x 1-1/4 bsp	£15.89
BUR00638	1-1/4 nptf x 1-1/2 bsp	£20.14
BUR00639	1-1/4 nptf x 2 bsp	£37.87
BUR00674	1-1/2 nptf x 3/4 bsp	£67.74
BUR00640	1-1/2 nptf x 1 bsp	£20.14
BUR00648	1-1/2 nptf x 1-1/4 bsp	£20.14
BUR00641	1-1/2 nptf x 1-1/2 bsp	£21.47
BUR00642	1-1/2 nptf x 2 bsp	£37.87
BUR00673	2 nptf x 3/4 bsp	£67.74
BUR00643	2 nptf x 1 bsp	£37.87
BUR00653	2 nptf x 1-1/4 bsp	£37.87
BUR00644	2 nptf x 1-1/2 bsp	£37.87
BUR00645	2 nptf x 2 bsp	£33.20
BUR00646	2 nptf x 2-1/2 bsp	£172.62
BUR00670	2 nptf x 3 bsp	£203.52
BUR00657	2-1/2 nptf x 2 bsp	£187.55
BUR00654	2-1/2 nptf x 2-1/2 bsp	£187.55
BUR00671	2-1/2 nptf x 3 bsp	£203.52
BUR00658	3 nptf x 2 bsp	£203.52
BUR00659	3 nptf x 2-1/2 bsp	£203.52
BUR00655	3 nptf x 3 bsp	£203.52
BUR00672	4 nptf x 4 bsp	£244.89

NPTF MALE x JIC MALE

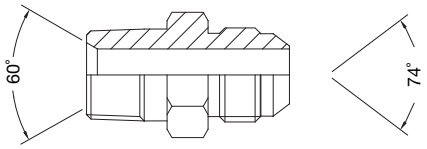

PART NO.	DESCRIPTION	PRICE
BUR00772	1/8 nptf x 3/8 jic	£4.83
BUR00720	1/8 nptf x 7/16 jic	£2.00
BUR00721	1/8 nptf x 1/2 jic	£2.00
BUR00722	1/8 nptf x 9/16 jic	£3.41
BUR00723	1/8 nptf x 3/4 jic	£3.94
BUR00742	1/4 nptf x 3/8 jic	£POA
BUR00724	1/4 nptf x 7/16 jic	£2.14
BUR00725	1/4 nptf x 1/2 jic	£2.14
BUR00726	1/4 nptf x 9/16 jic	£2.14
BUR00727	1/4 nptf x 3/4 jic	£3.19
BUR00728	1/4 nptf x 7/8 jic	£4.39
BUR00743	1/4 nptf x 1-1/16 jic	£15.44
BUR00744	1/4 nptf x 1-5/16 jic	£17.01
BUR00729	3/8 nptf x 7/16 jic	£2.82
BUR00730	3/8 nptf x 1/2 jic	£2.82
BUR00731	3/8 nptf x 9/16 jic	£2.37
BUR00732	3/8 nptf x 3/4 jic	£2.82
BUR00733	3/8 nptf x 7/8 jic	£3.41
BUR00734	3/8 nptf x 1-1/16 jic	£6.01
BUR00735	1/2 nptf x 7/16 jic	£4.45
BUR00736	1/2 nptf x 1/2 jic	£4.45
BUR00737	1/2 nptf x 9/16 jic	£3.41
BUR00738	1/2 nptf x 3/4 jic	£3.34
BUR00739	1/2 nptf x 7/8 jic	£3.34
BUR00740	1/2 nptf x 1-1/16 jic	£5.43
BUR00741	1/2 nptf x 1-5/16 jic	£7.95
BUR00745	3/4 nptf x 7/16 jic	£7.21
BUR00746	3/4 nptf x 9/16 jic	£6.60
BUR00747	3/4 nptf x 3/4 jic	£6.02
BUR00748	3/4 nptf x 7/8 jic	£6.02
BUR00749	3/4 nptf x 1-1/16 jic	£5.04
BUR00750	3/4 nptf x 1-5/16 jic	£7.57
BUR00771	3/4 nptf x 1-5/8 jic	£20.34
BUR00767	1 nptf x 3/4 jic	£9.14
BUR00768	1 nptf x 7/8 jic	£9.14
BUR00751	1 nptf x 1-1/16 jic	£8.01
BUR00752	1 nptf x 1-5/16 jic	£7.57
BUR00753	1 nptf x 1-5/8 jic	£20.34
BUR00754	1 nptf x 1-7/8 jic	£33.72
BUR00756	1-1/4 nptf x 1-1/16 jic	£20.28
BUR00757	1-1/4 nptf x 1-5/16 jic	£20.28
BUR00758	1-1/4 nptf x 1-5/8 jic	£17.76
BUR00759	1-1/4 nptf x 1-7/8 jic	£33.72
BUR00760	1-1/4 nptf x 2-1/2 jic	£58.83
BUR00761	1-1/2 nptf x 1-1/16 jic	£33.72
BUR00762	1-1/2 nptf x 1-5/16 jic	£33.72
BUR00763	1-1/2 nptf x 1-5/8 jic	£24.14
BUR00764	1-1/2 nptf x 1-7/8 jic	£24.14
BUR00765	1-1/2 nptf x 2-1/2 jic	£58.83
BUR00770	2 nptf x 1-5/8 jic	£53.03
BUR00769	2 nptf x 1-7/8 jic	£46.85
BUR00766	2 nptf x 2-1/2 jic	£46.85

METRIC MALE 1.5MM PITCH x BSP MALE

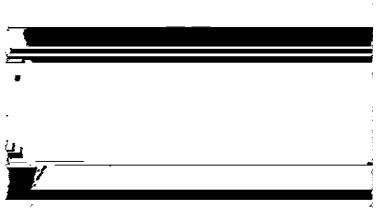

PART NO.	DESCRIPTION	PRICE
BUR00558	10mm x 1/8 bsp	£POA
BUR00500	10mm x 1/4 bsp	£3.26
BUR00546	10mm x 3/8 bsp	£POA
BUR00501	12mm x 1/8 bsp	£3.26
BUR00502	12mm x 1/4 bsp	£3.26
BUR00503	12mm x 3/8 bsp	£3.41
BUR00504	12mm x 1/2 bsp	£3.86
BUR00505	14mm x 1/8 bsp	£3.26
BUR00506	14mm x 1/4 bsp	£3.26
BUR00507	14mm x 3/8 bsp	£3.41
BUR00508	14mm x 1/2 bsp	£3.86
BUR00549	14mm x 5/8 bsp	£4.30
BUR00509	16mm x 1/4 bsp	£3.34
BUR00510	16mm x 3/8 bsp	£3.34
BUR00511	16mm x 1/2 bsp	£3.78
BUR00512	16mm x 5/8 bsp	£4.53
BUR00513	16mm x 3/4 bsp	£4.67
BUR00514	18mm x 1/4 bsp	£3.78
BUR00515	18mm x 3/8 bsp	£3.78
BUR00516	18mm x 1/2 bsp	£3.86
BUR00517	18mm x 5/8 bsp	£4.30
BUR00518	18mm x 3/4 bsp	£4.67
BUR00519	18mm x 1 bsp	£9.43
BUR00520	20mm x 1/4 bsp	£4.24
BUR00521	20mm x 3/8 bsp	£4.24
BUR00522	20mm x 1/2 bsp	£4.24
BUR00523	20mm x 3/4 bsp	£4.67
BUR00524	22mm x 1/4 bsp	£4.30
BUR00525	22mm x 3/8 bsp	£4.30
BUR00526	22mm x 1/2 bsp	£4.30
BUR00527	22mm x 5/8 bsp	£4.30
BUR00528	22mm x 3/4 bsp	£4.67
BUR00529	22mm x 1 bsp	£9.43
BUR00552	22mm x 1-1/2 bsp	£POA
BUR00551	24mm x 1/4 bsp	£5.49
BUR00550	24mm x 3/8 bsp	£5.49
BUR00530	24mm x 1/2 bsp	£4.67
BUR00531	24mm x 3/4 bsp	£5.49
BUR00554	26mm x 3/8 bsp	£7.27
BUR00532	26mm x 1/2 bsp	£4.67
BUR00544	26mm x 5/8 bsp	£5.49
BUR00533	26mm x 3/4 bsp	£4.67
BUR00534	26mm x 1 bsp	£9.43
BUR00538	26mm x 1-1/4 bsp	£31.57
BUR00545	28mm x 1 bsp	£28.07
BUR00559	30mm x 3/8 bsp	£POA
BUR00535	30mm x 3/4 bsp	£9.43
BUR00536	30mm x 1 bsp	£9.43
BUR00537	30mm x 1-1/4 bsp	£19.75
BUR00547	36mm x 1 bsp	£15.73
BUR00548	38mm x 1 bsp	£18.94
BUR00539	38mm x 1-1/4 bsp	£18.94
BUR00540	38mm x 1-1/2 bsp	£24.74
BUR00541	45mm x 1-1/2 bsp	£24.74
BUR00542	45mm x 2 bsp	£29.79
BUR00543	52mm x 2 bsp	£29.79

METRIC MALE 1MM PITCH x BSP MALE

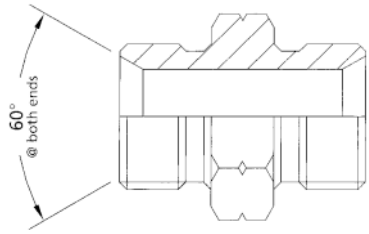

PART NO.	DESCRIPTION	PRICE
BUR10544	10 mm x 1/8 bsp	£3.26
BUR10545	10 mm x 1/4 bsp	£3.26
BUR10548	10 mm x 3/8 bsp	£3.71
BUR10543	12 mm x 1/8 bsp	£3.26
BUR10546	12 mm x 1/4 bsp	£3.26
BUR10541	14 mm x 1/4 bsp	£3.26

METRIC MALE 1.5MM PITCH x JIC MALE

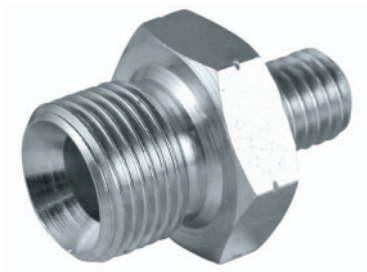

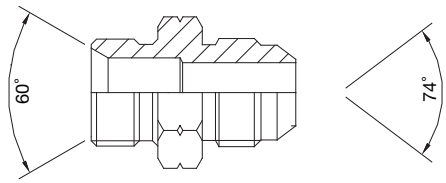

PART NO.	DESCRIPTION	PRICE
BUR01265	10mm x 7/16 jic	£20.19
BUR01274	12mm x 7/16 jic	£5.13
BUR01284	12mm x 9/16 jic	£5.13
BUR01286	12mm x 3/4 jic	£59.42
BUR01268	14mm x 3/8 jic	£14.19
BUR01291	14mm x 7/16 jic	£5.13
BUR01287	14mm x 9/16 jic	£5.13
BUR01288	14mm x 3/4 jic	£5.57
BUR01272	14mm x 7/8 jic	£19.30
BUR01295	16mm x 7/16 jic	£4.45
BUR01280	16mm x 9/16 jic	£4.45
BUR01275	16mm x 3/4 jic	£4.67
BUR01289	16mm x 7/8 jic	£5.57
BUR01296	16mm x 1-1/16 jic	£6.02
BUR01299	18mm x 7/16 jic	£5.86
BUR01276	18mm x 9/16 jic	£5.13
BUR01281	18mm x 3/4 jic	£5.13
BUR01283	18mm x 7/8 jic	£5.57
BUR01298	18mm x 1-1/16 jic	£6.02
BUR01282	20mm x 9/16 jic	£5.13
BUR01277	20mm x 3/4 jic	£5.13
BUR01290	20mm x 7/8 jic	£5.57
BUR01270	20mm x 1-1/16 jic	£8.46
BUR01285	22mm x 9/16 jic	£5.71
BUR01278	22mm x 3/4 jic	£5.57
BUR01279	22mm x 7/8 jic	£5.57
BUR01294	22mm x 1-1/16 jic	£6.02
BUR01293	24mm x 3/4 jic	£5.71
BUR01267	24mm x 1-1/16 jic	£6.02
BUR01297	26mm x 7/8 jic	£6.02
BUR01292	26mm x 1-1/16 jic	

50% OFF ALL PRICES

JIC MALE x JIC MALE

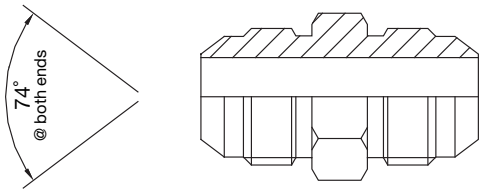

PART NO.	DESCRIPTION	PRICE
BUR01200	5/16 jic x 5/16 jic	£2.23
BUR01201	5/16 jic x 7/16 jic	£2.23
BUR01239	3/8 jic x 3/8 jic	£2.75
BUR01241	3/8 jic x 7/16 jic	£2.75
BUR01202	7/16 jic x 7/16 jic	£2.23
BUR01205	7/16 jic x 1/2 jic	£3.26
BUR01203	7/16 jic x 9/16 jic	£3.26
BUR01213	7/16 jic x 3/4 jic	£4.45
BUR01204	7/16 jic x 7/8 jic	£4.75
BUR01206	1/2 jic x 1/2 jic	£2.46
BUR01209	1/2 jic x 9/16 jic	£3.26
BUR01207	1/2 jic x 3/4 jic	£4.45
BUR01233	1/2 jic x 7/8 jic	£5.86
BUR01208	1/2 jic x 1-1/16 jic	£7.57
BUR01210	9/16 jic x 9/16 jic	£2.46
BUR01214	9/16 jic x 3/4 jic	£3.78
BUR01211	9/16 jic x 7/8 jic	£4.39
BUR01212	9/16 jic x 1-1/16 jic	£6.17
BUR01237	9/16 jic x 1-3/16 jic	£7.49
BUR01215	3/4 jic x 3/4 jic	£3.34
BUR01216	3/4 jic x 7/8 jic	£3.94
BUR01217	3/4 jic x 1-1/16 jic	£5.13
BUR01236	3/4 jic x 1-5/16 jic	£8.10
BUR01243	3/4 jic x 1-5/8 jic	£POA
BUR01218	7/8 jic x 7/8 jic	£3.64
BUR01219	7/8 jic x 1-1/16 jic	£5.43
BUR01220	7/8 jic x 1-3/16 jic	£7.57
BUR01221	7/8 jic x 1-5/16 jic	£7.36
BUR01222	1-1/16 jic x 1-1/16 jic	£5.13
BUR01223	1-1/16 jic x 1-3/16 jic	£7.57
BUR01224	1-1/16 jic x 1-5/16 jic	£7.36
BUR01240	1-1/16 jic x 1-5/8 jic	£18.49
BUR01238	1-1/16 jic x 1-7/8 jic	£21.08
BUR01225	1-3/16 jic x 1-3/16 jic	£7.57
BUR01226	1-3/16 jic x 1-5/16 jic	£8.10
BUR01227	1-5/16 jic x 1-5/16 jic	£7.27
BUR01228	1-5/16 jic x 1-5/8 jic	£18.42
BUR01235	1-5/16 jic x 1-7/8 jic	£19.30
BUR01246	1-5/16 jic x 2-1/2 jic	£POA
BUR01229	1-5/8 jic x 1-5/8 jic	£15.73
BUR01230	1-5/8 jic x 1-7/8 jic	£19.30
BUR01231	1-7/8 jic x 1-7/8 jic	£19.30
BUR01232	2-1/2 jic x 2-1/2 jic	£39.80

JIC MALE x JIC MALE BULKHEAD WITH LOCKNUT

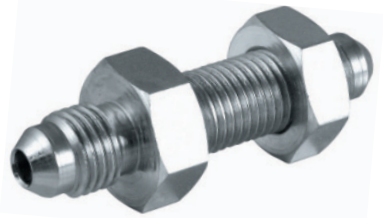

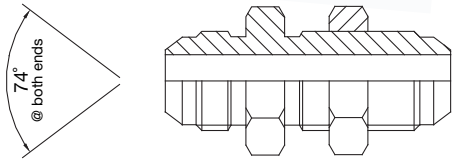

PART NO.	DESCRIPTION	PRICE
BUR00236	3/8 jic	£14.03
BUR00225	7/16 jic	£11.50
BUR00226	1/2 jic	£11.50
BUR00227	9/16 jic	£11.65
BUR00228	3/4 jic	£14.33
BUR00229	7/8 jic	£21.53
BUR00230	1-1/16 jic	£29.26
BUR00234	1-3/16 jic	£32.97
BUR00231	1-5/16 jic	£38.24
BUR00232	1-5/8 jic	£55.63
BUR00233	1-7/8 jic	£95.65
BUR00235	2-1/2 jic	£POA

SAE '0' RING BOSS MALE LESS '0' RING x BSP MALE

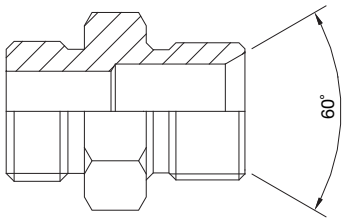

PART NO.	DESCRIPTION	PRICE
BUR01329	1/4 sorb x 1/8 bsp	£3.41
BUR01326	1/4 sorb x 1/4 bsp	£3.41
BUR01300	3/8 sorb x 1/4 bsp	£3.41
BUR01323	3/8 sorb x 3/8 bsp	£4.24
BUR01309	7/16 sorb x 1/8 bsp	£2.89
BUR01301	7/16 sorb x 1/4 bsp	£2.29
BUR01303	7/16 sorb x 3/8 bsp	£2.67
BUR01302	7/16 sorb x 1/2 bsp	£3.41
BUR01304	1/2 sorb x 1/4 bsp	£2.60
BUR01305	1/2 sorb x 3/8 bsp	£2.75
BUR01341	1/2 sorb x 1/2 bsp	£3.56
BUR01306	9/16 sorb x 1/4 bsp	£2.62
BUR01307	9/16 sorb x 3/8 bsp	£2.75
BUR01308	9/16 sorb x 1/2 bsp	£3.41
BUR01310	3/4 sorb x 1/4 bsp	£3.41
BUR01311	3/4 sorb x 3/8 bsp	£3.41
BUR01312	3/4 sorb x 1/2 bsp	£3.41
BUR01313	3/4 sorb x 5/8 bsp	£3.94
BUR01314	3/4 sorb x 3/4 bsp	£5.13
BUR01315	5/8 sorb x 1/4 bsp	£3.94
BUR01316	5/8 sorb x 3/8 bsp	£3.94
BUR01344	5/8 sorb x 1/2 bsp	£3.94
BUR01346	7/8 sorb x 1/4 bsp	£3.94
BUR01317	7/8 sorb x 3/8 bsp	£3.94
BUR01318	7/8 sorb x 1/2 bsp	£3.94
BUR01319	7/8 sorb x 5/8 bsp	£3.94
BUR01320	7/8 sorb x 3/4 bsp	£5.13
BUR01335	7/8 sorb x 1 bsp	£8.31
BUR01336	1-1/16 sorb x 1/4 bsp	£POA
BUR01321	1-1/16 sorb x 3/8 bsp	£5.86
BUR01322	1-1/16 sorb x 1/2 bsp	£5.43
BUR01337	1-1/16 sorb x 5/8 bsp	£6.32
BUR01324	1-1/16 sorb x 3/4 bsp	£5.18
BUR01325	1-1/16 sorb x 1 bsp	£7.95
BUR01348	1-1/16 sorb x 1-1/4 bsp	£18.86
BUR01345	1-3/16 sorb x 3/4 bsp	£23.85
BUR01343	1-5/16 sorb x 1/2 bsp	£8.76
BUR01327	1-5/16 sorb x 3/4 bsp	£7.95
BUR01328	1-5/16 sorb x 1 bsp	£7.95
BUR01338	1-5/16 sorb x 1-1/4 bsp	£18.86
BUR01330	1-5/16 sorb x 1-1/2 bsp	£23.85
BUR01331	1-5/8 sorb x 3/4 bsp	£23.85
BUR01332	1-5/8 sorb x 1 bsp	£18.86
BUR01333	1-5/8 sorb x 1-1/4 bsp	£18.86
BUR01339	1-5/8 sorb x 1-1/2 bsp	£27.92
BUR01342	1-7/8 sorb x 1-1/4 bsp	£28.01
BUR01340	1-7/8 sorb x 1-1/2 bsp	£28.01

SAE '0' RING BOSS MALE LESS '0' RING x JIC MALE

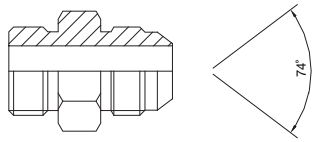

PART NO.	DESCRIPTION	PRICE
BUR01350	7/16 sorb x 7/16 jic	£2.46
BUR01353	7/16 sorb x 1/2 jic	£2.75
BUR01351	7/16 sorb x 9/16 jic	£2.75
BUR01398	7/16 sorb x 7/8 jic	£4.39
BUR01392	1/2 sorb x 7/16 jic	£2.75
BUR01352	1/2 sorb x 1/2 jic	£2.75
BUR01388	1/2 sorb x 9/16 jic	£2.75
BUR01399	9/16 sorb x 3/8 jic	£POA
BUR01354	9/16 sorb x 7/16 jic	£2.75
BUR01355	9/16 sorb x 1/2 jic	£4.53
BUR01356	9/16 sorb x 9/16 jic	£2.75
BUR01357	9/16 sorb x 3/4 jic	£3.41
BUR01358	9/16 sorb x 7/8 jic	£3.78
BUR01389	3/4 sorb x 7/16 jic	£3.94
BUR01361	3/4 sorb x 9/16 jic	£3.94
BUR01362	3/4 sorb x 3/4 jic	£3.19
BUR01363	3/4 sorb x 7/8 jic	£3.64
BUR01364	3/4 sorb x 1-1/16 jic	£5.86
BUR01386	7/8 sorb x 9/16 jic	£4.24
BUR01365	7/8 sorb x 3/4 jic	£3.86
BUR01366	7/8 sorb x 7/8 jic	£3.71
BUR01367	7/8 sorb x 1-1/16 jic	£6.17
BUR01395	1-1/16 sorb x 9/16 jic	£6.75
BUR01368	1-1/16 sorb x 3/4 jic	£5.86
BUR01370	1-1/16 sorb x 7/8 jic	£5.86
BUR01371	1-1/16 sorb x 1-1/16 jic	£5.43
BUR01373	1-1/16 sorb x 1-5/16 jic	£8.61
BUR01374	1-3/16 sorb x 1-1/16 jic	£8.61
BUR01391	1-3/16 sorb x 1-3/16 jic	£8.31
BUR01394	1-5/16 sorb x 3/4 jic	£15.89
BUR01396	1-5/16 sorb x 7/8 jic	£15.89
BUR01377	1-5/16 sorb x 1-1/16 jic	£8.61
BUR01378	1-5/16 sorb x 1-5/16 jic	£8.61
BUR01379	1-5/16 sorb x 1-5/8 jic	£15.97
BUR01380	1-5/8 sorb x 1-5/16 jic	£15.97
BUR01381	1-5/8 sorb x 1-5/8 jic	£15.97
BUR01387	1-5/8 sorb x 1-7/8 jic	£25.99
BUR01397	1-7/8 sorb x 1-5/16 jic	£25.99
BUR01383	1-7/8 sorb x 1-5/8 jic	£25.99
BUR01384	1-7/8 sorb x 1-7/8 jic	£23.85
BUR01369	1-7/8 sorb x 2-1/2 jic	£52.65
BUR01385	2-1/2 sorb x 2-1/2 jic	£52.65

MALE x SWIVEL FEMALE ADAPTORS

FLOWFIT

BSP MALE x BSP SWIVEL FEMALE

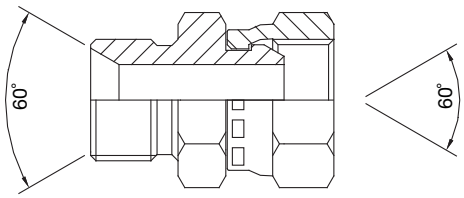

PART NO.	DESCRIPTION	PRICE
BUR01425	1/8 bsp x 1/8 bsp	£3.64
BUR01426	1/8 bsp x 1/4 bsp	£3.64
BUR01476	1/8 bsp x 3/8 bsp	£3.64
BUR01428	1/4 bsp x 1/8 bsp	£3.64
BUR01427	1/4 bsp x 1/4 bsp	£2.82
BUR01429	1/4 bsp x 3/8 bsp	£3.34
BUR01430	1/4 bsp x 1/2 bsp	£4.60
BUR01431	1/4 bsp x 3/4 bsp	£9.14
BUR01432	3/8 bsp x 1/8 bsp	£3.78
BUR01433	3/8 bsp x 1/4 bsp	£2.82
BUR01434	3/8 bsp x 3/8 bsp	£3.26
BUR01435	3/8 bsp x 1/2 bsp	£4.45
BUR01470	3/8 bsp x 5/8 bsp	£8.41
BUR01436	3/8 bsp x 3/4 bsp	£8.46
BUR01437	3/8 bsp x 1 bsp	£10.18
BUR01438	1/2 bsp x 1/4 bsp	£4.60
BUR01439	1/2 bsp x 3/8 bsp	£4.46
BUR01440	1/2 bsp x 1/2 bsp	£4.46
BUR01441	1/2 bsp x 5/8 bsp	£5.43
BUR01442	1/2 bsp x 3/4 bsp	£6.60
BUR01443	1/2 bsp x 1 bsp	£9.88
BUR01457	5/8 bsp x 1/4 bsp	£8.41
BUR01444	5/8 bsp x 3/8 bsp	£8.41
BUR01445	5/8 bsp x 1/2 bsp	£5.43
BUR01446	5/8 bsp x 5/8 bsp	£5.13
BUR01447	5/8 bsp x 3/4 bsp	£8.46
BUR01481	5/8 bsp x 1 bsp	£11.65
BUR01468	3/4 bsp x 1/4 bsp	£8.46
BUR01448	3/4 bsp x 3/8 bsp	£8.46
BUR01449	3/4 bsp x 1/2 bsp	£6.60
BUR01450	3/4 bsp x 5/8 bsp	£8.46
BUR01451	3/4 bsp x 3/4 bsp	£6.60
BUR01453	3/4 bsp x 1 bsp	£10.18
BUR01452	3/4 bsp x 1-1/4 bsp	£22.06
BUR01482	3/4 bsp x 1-1/2 bsp	£POA
BUR01484	1 bsp x 3/8 bsp	£POA
BUR01454	1 bsp x 1/2 bsp	£10.18
BUR01455	1 bsp x 5/8 bsp	£10.18
BUR01456	1 bsp x 3/4 bsp	£10.18
BUR01458	1 bsp x 1 bsp	£10.18
BUR01463	1 bsp x 1-1/4 bsp	£20.34
BUR01472	1 bsp x 1-1/2 bsp	£31.87
BUR01479	1 bsp x 2 bsp	£54.29
BUR01459	1-1/4 bsp x 1/2 bsp	£21.76
BUR01469	1-1/4 bsp x 3/4 bsp	£20.34
BUR01460	1-1/4 bsp x 1 bsp	£20.34
BUR01461	1-1/4 bsp x 1-1/4 bsp	£20.34
BUR01462	1-1/4 bsp x 1-1/2 bsp	£30.74
BUR01477	1-1/4 bsp x 2 bsp	£54.29
BUR01464	1-1/2 bsp x 1 bsp	£30.74
BUR01465	1-1/2 bsp x 1-1/4 bsp	£30.74
BUR01466	1-1/2 bsp x 1-1/2 bsp	£31.87
BUR01471	1-1/2 bsp x 2 bsp	£54.29
BUR01475	2 bsp x 1-1/4 bsp	£54.29
BUR01474	2 bsp x 1-1/2 bsp	£54.29
BUR01467	2 bsp x 2 bsp	£54.29
BUR01478	2 bsp x 3 bsp	£POA

BSP MALE x JIC SWIVEL FEMALE

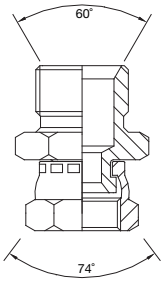

PART NO.	DESCRIPTION	PRICE
BUR11501	1/8 bsp x 7/16 jic	£4.75
BUR11513	1/4 bsp x 7/16 jic	£4.75
BUR11514	1/4 bsp x 1/2 jic	£4.75
BUR11515	1/4 bsp x 9/16 jic	£4.75
BUR11516	1/4 bsp x 3/4 jic	£5.13
BUR11524	3/8 bsp x 7/16 jic	£5.13
BUR11525	3/8 bsp x 1/2 jic	£5.13
BUR11526	3/8 bsp x 9/16 jic	£5.13
BUR11527	3/8 bsp x 3/4 jic	£4.75
BUR11528	3/8 bsp x 7/8 jic	£5.86
BUR11529	3/8 bsp x 1-1/16 jic	£21.23
BUR11536	1/2 bsp x 7/16 jic	£5.86
BUR11537	1/2 bsp x 1/2 jic	£5.86
BUR11538	1/2 bsp x 9/16 jic	£4.75
BUR11539	1/2 bsp x 3/4 jic	£5.13
BUR11540	1/2 bsp x 7/8 jic	£5.71
BUR11541	1/2 bsp x 1-1/16 jic	£10.18
BUR11551	5/8 bsp x 3/4 jic	£6.75
BUR11552	5/8 bsp x 7/8 jic	£6.75
BUR11553	5/8 bsp x 1-1/16 jic	£14.19
BUR11562	3/4 bsp x 9/16 jic	£8.61
BUR11563	3/4 bsp x 3/4 jic	£8.61
BUR11564	3/4 bsp x 7/8 jic	£9.05
BUR11565	3/4 bsp x 1-1/16 jic	£10.18
BUR11566	3/4 bsp x 1-3/16 jic	£13.92
BUR11567	3/4 bsp x 1-5/16 jic	£18.27
BUR11577	1 bsp x 1-1/16 jic	£14.19
BUR11578	1 bsp x 1-3/16 jic	£15.15
BUR11579	1 bsp x 1-5/16 jic	£18.27
BUR11580	1 bsp x 1-5/8 jic	£29.32
BUR11591	1-1/4 bsp x 1-5/16 jic	£29.32
BUR11592	1-1/4 bsp x 1-5/8 jic	£29.32
BUR11593	1-1/4 bsp x 1-7/8 jic	£43.36
BUR11606	1-1/2 bsp x 1-5/8 jic	£43.36
BUR11605	1-1/2 bsp x 1-7/8 jic	£43.36
BUR11619	1-1/2 bsp x 2-1/2 jic	£POA
BUR11617	2 bsp x 1-7/8 jic	£54.29
BUR11618	2 bsp x 2-1/2 jic	£54.29

JIC MALE x JIC SWIVEL FEMALE

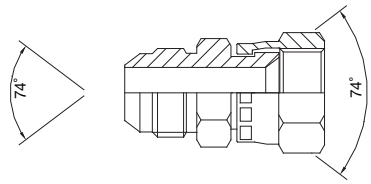

PART NO.	DESCRIPTION	PRICE
BUR01687	7/16 jic x 7/16 jic	£5.64
BUR01675	7/16 jic x 9/16 jic	£5.64
BUR01694	7/16 jic x 3/4 jic	£6.60
BUR01671	7/16 jic x 7/8 jic	£6.75
BUR01670	1/2 jic x 7/16 jic	£20.31
BUR01676	1/2 jic x 1/2 jic	£5.61
BUR01677	1/2 jic x 9/16 jic	£5.64
BUR01684	9/16 jic x 7/16 jic	£5.64
BUR01674	9/16 jic x 1/2 jic	£5.64
BUR01678	9/16 jic x 9/16 jic	£5.64
BUR01679	9/16 jic x 3/4 jic	£5.79
BUR01695	9/16 jic x 7/8 jic	£6.75
BUR01680	3/4 jic x 9/16 jic	£5.78
BUR01685	3/4 jic x 3/4 jic	£5.79
BUR01681	3/4 jic x 7/8 jic	£6.75
BUR01691	3/4 jic x 1-1/16 jic	£10.12
BUR01682	7/8 jic x 3/4 jic	£6.75
BUR01683	7/8 jic x 7/8 jic	£6.75
BUR01690	7/8 jic x 1-1/16 jic	£10.18
BUR01688	1-1/16 jic x 3/4 jic	£8.99
BUR01686	1-1/16 jic x 7/8 jic	£8.99
BUR01692	1-1/16 jic x 1-1/16 jic	£9.73
BUR01696	1-1/16 jic x 1-5/16 jic	£16.48
BUR01666	1-1/16 jic x 1-5/8 jic	£34.02
BUR01699	1-3/16 jic x 1-3/16 jic	£11.59
BUR01689	1-5/16 jic x 1-1/16 jic	£16.48
BUR01693	1-5/16 jic x 1-5/16 jic	£16.48
BUR01673	1-5/16 jic x 1-5/8 jic	£34.02
BUR01669	1-5/16 jic x 1-7/8 jic	£34.00
BUR01770	1-5/8 jic x 1-5/16 jic	£34.02
BUR01697	1-5/8 jic x 1-5/8 jic	£34.02
BUR01672	1-5/8 jic x 1-7/8 jic	£34.02
BUR01698	1-7/8 jic x 1-7/8 jic	£43.13
BUR01667	1-7/8 jic x 2-1/2 jic	£POA

JIC MALE x BSP SWIVEL FEMALE

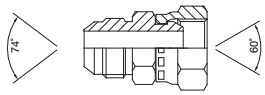

PART NO.	DESCRIPTION	PRICE
BUR01600	7/16 jic x 1/8 bsp	£4.75
BUR01605	7/16 jic x 1/4 bsp	£4.75
BUR01614	7/16 jic x 3/8 bsp	£5.86
BUR01613	7/16 jic x 1/2 bsp	£5.86
BUR01601	1/2 jic x 1/4 bsp	£4.75
BUR01618	1/2 jic x 3/8 bsp	£5.86
BUR01617	1/2 jic x 1/2 bsp	£5.86
BUR01602	9/16 jic x 1/4 bsp	£4.75
BUR01603	9/16 jic x 3/8 bsp	£5.13
BUR01604	9/16 jic x 1/2 bsp	£5.18
BUR01606	3/4 jic x 3/8 bsp	£5.13
BUR01607	3/4 jic x 1/2 bsp	£5.71
BUR01599	3/4 jic x 5/8 bsp	£6.97
BUR01620	3/4 jic x 3/4 bsp	£8.31
BUR01608	7/8 jic x 3/8 bsp	£2.93
BUR01609	7/8 jic x 1/2 bsp	£2.93
BUR01619	7/8 jic x 5/8 bsp	£8.99
BUR01615	7/8 jic x 3/4 bsp	£8.99
BUR01610	1-1/16 jic x 3/4 bsp	£8.99
BUR01616	1-1/16 jic x 1 bsp	£13.01
BUR01623	1-3/16 jic x 3/4 bsp	£13.01
BUR01624	1-5/16 jic x 3/4 bsp	£13.15
BUR01611	1-5/16 jic x 1 bsp	£13.15
BUR01612	1-5/8 jic x 1-1/4 bsp	£29.33
BUR01597	1-5/8 jic x 1-1/2 bsp	£32.22
BUR01598	1-7/8 jic x 1-1/2 bsp	£43.36

50% OFF ALL PRICES

SWIVEL FEMALE x SWIVEL FEMALE ADAPTORS

BSP SWIVEL FEMALE x BSP SWIVEL FEMALE

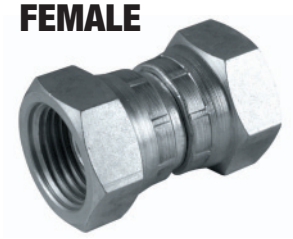

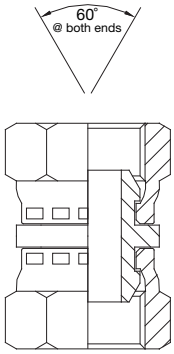

PART NO.	DESCRIPTION	PRICE
BUR01725	1/8 bsp x 1/8 bsp	£3.64
BUR01726	1/8 bsp x 1/4 bsp	£3.78
BUR01751	1/8 bsp x 3/8 bsp	£4.24
BUR01727	1/4 bsp x 1/4 bsp	£3.12
BUR01728	1/4 bsp x 3/8 bsp	£3.34
BUR01732	1/4 bsp x 1/2 bsp	£4.67
BUR01736	1/4 bsp x 5/8 bsp	£6.02
BUR01724	1/4 bsp x 3/4 bsp	£7.95
BUR01729	3/8 bsp x 3/8 bsp	£3.34
BUR01733	3/8 bsp x 1/2 bsp	£4.53
BUR01737	3/8 bsp x 5/8 bsp	£5.64
BUR01730	3/8 bsp x 3/4 bsp	£7.95
BUR01731	3/8 bsp x 1 bsp	£11.13
BUR01734	1/2 bsp x 1/2 bsp	£4.53
BUR01746	1/2 bsp x 5/8 bsp	£5.57
BUR01735	1/2 bsp x 3/4 bsp	£7.95
BUR01750	1/2 bsp x 1 bsp	£11.59
BUR01738	5/8 bsp x 5/8 bsp	£5.64
BUR01740	5/8 bsp x 3/4 bsp	£7.95
BUR01739	5/8 bsp x 1 bsp	£10.32
BUR01741	3/4 bsp x 3/4 bsp	£7.21
BUR01742	3/4 bsp x 1 bsp	£10.32
BUR01747	3/4 bsp x 1-1/4 bsp	£21.02
BUR01743	1 bsp x 1 bsp	£10.35
BUR01744	1 bsp x 1-1/4 bsp	£21.02
BUR01752	1 bsp x 1-1/2 bsp	£35.05
BUR01745	1-1/4 bsp x 1-1/4 bsp	£21.02
BUR01753	1-1/4 bsp x 1-1/2 bsp	£36.82
BUR01756	1-1/4 bsp x 2 bsp	£69.44
BUR01748	1-1/2 bsp x 1-1/2 bsp	£36.82
BUR01755	1-1/2 bsp x 2 bsp	£69.44
BUR01749	2 bsp x 2 bsp	£36.82

MALE x FIXED FEMALE & FIXED FEMALE/FEMALE ADAPTORS

BSP MALE x BSP FIXED FEMALE EXTENDED

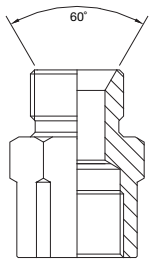

PART NO.	DESCRIPTION	PRICE
BUR00922	1/8 bsp x 1/8 bsp	£4.00
BUR00924	1/8 bsp x 1/4 bsp	£3.94
BUR00931	1/8 bsp x 3/8 bsp	£7.88
BUR00928	1/8 bsp x 1/2 bsp	£9.50
BUR00905	1/4 bsp x 1/8 bsp	£3.94
BUR00900	1/4 bsp x 1/4 bsp	£3.34
BUR00901	1/4 bsp x 3/8 bsp	£3.64
BUR00904	1/4 bsp x 1/2 bsp	£4.53
BUR00932	1/4 bsp x 3/4 bsp	£15.00
BUR00902	3/8 bsp x 1/4 bsp	£3.64
BUR00903	3/8 bsp x 3/8 bsp	£3.64
BUR00913	3/8 bsp x 1/2 bsp	£3.94
BUR00933	3/8 bsp x 3/4 bsp	£15.00
BUR00938	3/8 bsp x 1 bsp	£POA
BUR00906	1/2 bsp x 3/8 bsp	£39.21
BUR00907	1/2 bsp x 1/2 bsp	£39.21
BUR00918	1/2 bsp x 3/4 bsp	£8.53
BUR00929	1/2 bsp x 1 bsp	£14.41
BUR00934	1/2 bsp x 1-1/4 bsp	£36.29
BUR00908	5/8 bsp x 1/2 bsp	£4.53
BUR00939	5/8 bsp x 3/4 bsp	£22.36
BUR00916	3/4 bsp x 1/2 bsp	£5.86
BUR00925	3/4 bsp x 5/8 bsp	£5.86
BUR00909	3/4 bsp x 3/4 bsp	£5.86
BUR00919	3/4 bsp x 1 bsp	£13.06
BUR00910	3/4 bsp x 1-1/4 bsp	£36.17
BUR00911	5.923/4 bsp x 1-1/2 bsp	£39.04
BUR00920	1 bsp x 3/4 bsp	£10.98
BUR00912	1 bsp x 1 bsp	£10.98
BUR00923	1 bsp x 1-1/4 bsp	£34.76
BUR00927	1 bsp x 1-1/2 bsp	£36.82
BUR00936	1 bsp x 2 bsp	£52.22
BUR00942	1 bsp x 3 bsp	£POA
BUR00914	1-1/4 bsp x 1-1/4 bsp	£20.34
BUR00930	1-1/4 bsp x 1-1/2 bsp	£41.06
BUR00937	1-1/4 bsp x 2 bsp	£52.22
BUR00921	1-1/2 bsp x 1-1/4 bsp	£36.82
BUR00917	1-1/2 bsp x 1-1/2 bsp	£36.82
BUR00915	2 bsp x 2 bsp	£44.70
BUR00935	2 bsp x 2-1/2 bsp	£256.48
BUR00926	2-1/2 bsp x 2-1/2 bsp	£256.40
BUR00940	4 bsp x 3-1/2 bsp	£POA

BSP MALE 60° CONE x BSP FIXED FEMALE BUSH

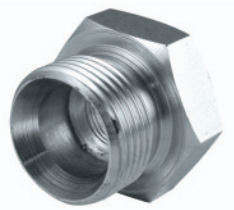

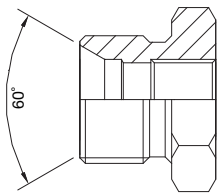

PART NO.	DESCRIPTION	PRICE
BUR16167	3/8 bsp x 1/8 bsp	£4.53
BUR16166	1/2 bsp x 1/8 bsp	£4.53
BUR16150	1/2 bsp x 1/4 bsp	£3.64
BUR16151	5/8 bsp x 1/4 bsp	£4.75
BUR16152	3/4 bsp x 1/4 bsp	£4.98
BUR16153	3/4 bsp x 3/8 bsp	£4.98
BUR16156	1 bsp x 1/4 bsp	£13.03
BUR16168	1 bsp x 3/8 bsp	£8.26
BUR16157	1 bsp x 1/2 bsp	£8.26
BUR16147	1-1/4 bsp x 1/2 bsp	£19.23
BUR16158	1-1/4 bsp x 3/4 bsp	£19.23
BUR16162	1-1/4 bsp x 1 bsp	£19.23
BUR16149	1-1/2 bsp x 1/2 bsp	£33.50
BUR16159	1-1/2 bsp x 3/4 bsp	£33.50
BUR16160	1-1/2 bsp x 1 bsp	£33.50
BUR16527	2 bsp x 1/4 bsp	£42.25
BUR16528	2 bsp x 3/8 bsp	£42.25
BUR16146	2 bsp x 1/2 bsp	£42.25
BUR16161	2 bsp x 1 bsp	£42.25
BUR16164	2 bsp x 1-1/4 bsp	£42.25
BUR16163	2 bsp x 1-1/2 bsp	£42.25
BUR16165	2-1/2 bsp x 1-1/2 bsp	£107.86
BUR16154	2-1/2 bsp x 2 bsp	£107.86
BUR16148	3 bsp x 1-1/2 bsp	£24.28
BUR16155	3 bsp x 2 bsp	£157.09

NPTF MALE x NPTF FIXED FEMALE BUSH

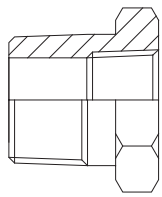

PART NO.	DESCRIPTION	PRICE
BUR01001	1/4 nptf x 1/8 nptf	£4.67
BUR01002	3/8 nptf x 1/8 nptf	£5.18
BUR01003	3/8 nptf x 1/4 nptf	£5.18
BUR01018	1/2 nptf x 1/8 nptf	£8.01
BUR01004	1/2 nptf x 1/4 nptf	£5.57
BUR01005	1/2 nptf x 3/8 nptf	£5.57
BUR01032	3/4 nptf x 1/8 nptf	£7.06
BUR01006	3/4 nptf x 1/4 nptf	£7.06
BUR01007	3/4 nptf x 3/8 nptf	£7.06
BUR01008	3/4 nptf x 1/2 nptf	£9.50
BUR01022	1 nptf x 1/4 nptf	£9.50
BUR01011	1 nptf x 3/8 nptf	£9.50
BUR01009	1 nptf x 1/2 nptf	£9.50
BUR01010	1 nptf x 3/4 nptf	£22.43
BUR01023	1-1/4 nptf x 1/4 nptf	£22.43
BUR01025	1-1/4 nptf x 3/8 nptf	£22.43
BUR01026	1-1/4 nptf x 1/2 nptf	£22.43
BUR01019	1-1/4 nptf x 3/4 nptf	£22.43
BUR01012	1-1/4 nptf x 1 nptf	£42.47
BUR01024	1-1/2 nptf x 1/4 nptf	£42.47
BUR01027	1-1/2 nptf x 3/8 nptf	£42.47
BUR01028	1-1/2 nptf x 1/2 nptf	£42.47
BUR01013	1-1/2 nptf x 3/4 nptf	£42.47
BUR01015	1-1/2 nptf x 1 nptf	£44.12
BUR01021	1-1/2 nptf x 1-1/4 nptf	£50.72
BUR01031	2 nptf x 1/4 nptf	£62.48
BUR01035	2 nptf x 3/8 nptf	£62.48
BUR01030	2 nptf x 1/2 nptf	£62.48
BUR01029	2 nptf x 3/4 nptf	£62.48
BUR01014	2 nptf x 1 nptf	£62.48
BUR01017	2 nptf x 1-1/4 nptf	£70.85
BUR01016	2 nptf x 1-1/2 nptf	£73.56
BUR01033	2-1/2 nptf x 2 nptf	£182.13
BUR01037	3 nptf x 1-1/4 nptf	£208.56
BUR01036	3 nptf x 2 nptf	£201.29
BUR01034	4 nptf x 3/4 nptf	£POA

BSP FIXED FEMALE x BSP FIXED FEMALE

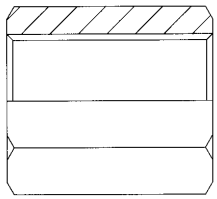

PART NO.	DESCRIPTION	PRICE
BUR09000	1/8 bsp	£3.64
BUR09002	1/4 bsp	£2.75
BUR09004	3/8 bsp	£3.12
BUR09005	1/2 bsp	£3.26
BUR09009	5/8 bsp	£4.53
BUR09010	3/4 bsp	£6.60
BUR09011	1 bsp	£10.98
BUR09012	1-1/4 bsp	£21.08
BUR09013	1-1/2 bsp	£33.72
BUR09014	2 bsp	£55.26
BUR09019	2-1/2 bsp	£151.59
BUR08998	3 bsp	£POA

TEES & CROSS ADAPTORS

FLOWFIT

BSP MALE TEE CONE SEATING

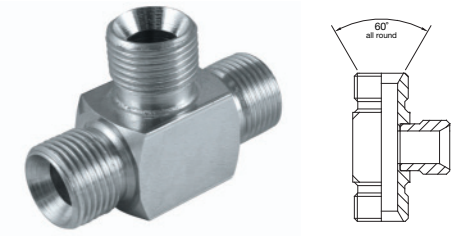

PART NO.	DESCRIPTION	PRICE
BUR01901	1/4 bsp	£7.21
BUR01902	3/8 bsp	£10.40
BUR01903	1/2 bsp	£12.02
BUR01905	3/4 bsp	£14.19
BUR01906	1 bsp	£30.82
BUR01908	1-1/2 bsp	£85.94
BUR01909	2 bsp	£163.32

BSP MALE x BSP MALE x BSP SWIVEL FEMALE BRANCH TEE

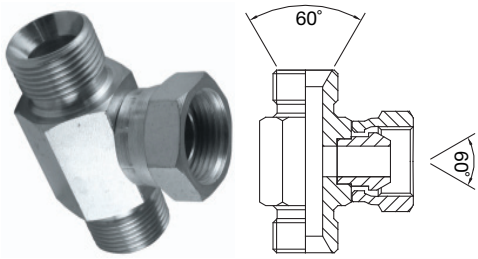

PART NO.	DESCRIPTION	PRICE
BUR02000	1/8 bsp	£10.46
BUR02001	1/4 bsp	£10.92
BUR02002	3/8 bsp	£12.17
BUR02003	1/2 bsp	£14.33
BUR02004	5/8 bsp	£19.68
BUR02005	3/4 bsp	£22.72
BUR02006	1 bsp	£31.04
BUR02007	1-1/4 bsp	£76.66
BUR02012	1-1/2 bsp	£104.28

BSP MALE TEE FOR BONDED SEAL

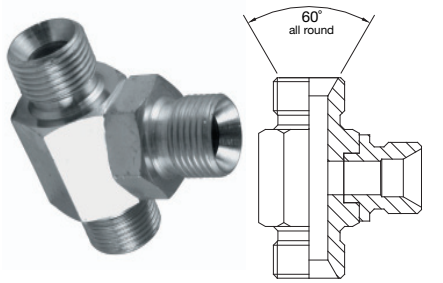

PART NO.	DESCRIPTION	PRICE
BUR01932	1/8 bsp	£9.73
BUR01925	1/4 bsp	£8.61
BUR01926	3/8 bsp	£11.13
BUR01927	1/2 bsp	£13.96
BUR01928	5/8 bsp	£15.59
BUR01929	3/4 bsp	£19.23
BUR01930	1 bsp	£33.50
BUR01931	1-1/4 bsp	£72.12
BUR01938	1-1/2 bsp	£208.72
BUR01939	2 bsp	£280.54

BSP MALE x BSP SWIVEL FEMALE x BSP MALE BRANCH TEE

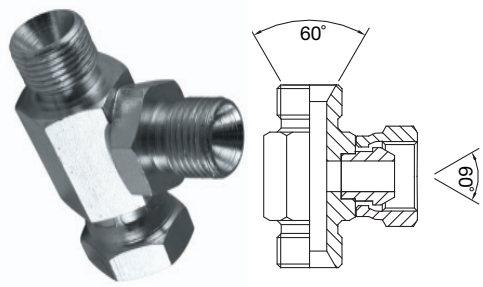

PART NO.	DESCRIPTION	PRICE
BUR02033	1/8 bsp	£13.80
BUR02025	1/4 bsp	£13.67
BUR02026	3/8 bsp	£15.15
BUR02027	1/2 bsp	£18.49
BUR02028	5/8 bsp	£27.71
BUR02029	3/4 bsp	£30.22
BUR02030	1 bsp	£36.82
BUR02034	1-1/4 bsp	£76.66
BUR02020	1-1/2 bsp	£130.95
BUR02021	2 bsp	£POA

JIC MALE x JIC SWIVEL FEMALE x JIC MALE BRANCH TEE

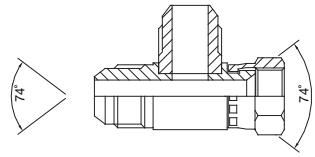

PART NO.	DESCRIPTION	PRICE
BUR12040	7/16 jic	£13.15
BUR12041	1/2 jic	£13.15
BUR12042	9/16 jic	£13.15
BUR12043	3/4 jic	£16.33
BUR12044	7/8 jic	£20.94
BUR12045	1-1/16 jic	£38.69
BUR12046	1-5/16 jic	£56.30
BUR12047	1-5/8 jic	£117.29
BUR12048	1-7/8 jic	£152.11

BSP SWIVEL FEMALE TEE

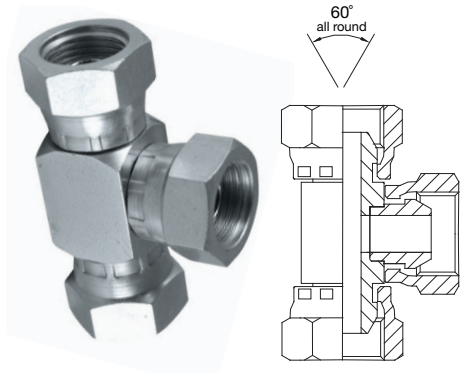

PART NO.	DESCRIPTION	PRICE
BUR01975	1/8 bsp	£10.40
BUR01976	1/4 bsp	£10.92
BUR01977	3/8 bsp	£12.17
BUR01978	1/2 bsp	£14.48
BUR01979	5/8 bsp	£20.14
BUR01980	3/4 bsp	£22.95
BUR01981	1 bsp	£31.34
BUR01982	1-1/4 bsp	£86.16
BUR01983	1-1/2 bsp	£150.48
BUR01984	2 bsp	£195.14

ELBOW ADAPTORS

FLOWFIT

BSP MALE FOR BONDED SEAL x BSP SWIVEL FEMALE 90° COMPACT ELBOW

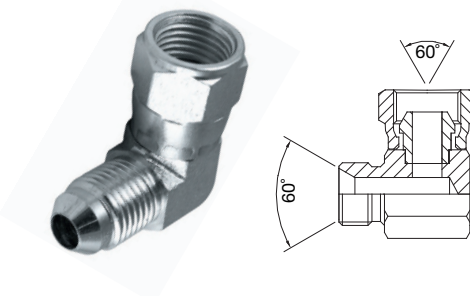

PART NO.	DESCRIPTION	PRICE
BUR04012	1/8 bsp x 1/8 bsp	£7.73
BUR04014	1/4 bsp x 1/4 bsp	£7.73
BUR04013	3/8 bsp x 1/4 bsp	£10.98
BUR04015	3/8 bsp x 3/8 bsp	£10.98
BUR04021	1/2 bsp x 3/8 bsp	£11.82
BUR04016	1/2 bsp x 1/2 bsp	£11.82
BUR04024	1/2 bsp x 5/8 bsp	£17.23
BUR04011	1/2 bsp x 3/4 bsp	£16.94
BUR04020	5/8 bsp x 5/8 bsp	£15.59
BUR04022	3/4 bsp x 1/2 bsp	£19.38
BUR04017	3/4 bsp x 3/4 bsp	£19.55
BUR04018	1 bsp x 1 bsp	£31.87
BUR04019	1-1/4 bsp x 1-1/4 bsp	£54.58
BUR04025	1-1/2 bsp x 1-1/2 bsp	£107.91
BUR04023	2 bsp x 2 bsp	£151.91

50% OFF ALL PRICES

BSP MALE CONE SEAT x BSP SWIVEL FEMALE 90° COMPACT ELBOW

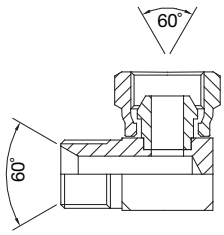

PART NO.	DESCRIPTION	PRICE
BUR05013	1/4 bsp x 1/8 bsp	£7.73
BUR05000	1/4 bsp x 1/4 bsp	£7.73
BUR05006	1/4 bsp x 3/8 bsp	£10.98
BUR05014	3/8 bsp x 1/4 bsp	£10.98
BUR05001	3/8 bsp x 3/8 bsp	£9.50
BUR05011	3/8 bsp x 1/2 bsp	£11.82
BUR05015	1/2 bsp x 3/8 bsp	£11.82
BUR05002	1/2 bsp x 1/2 bsp	£11.82
BUR05012	1/2 bsp x 3/4 bsp	£18.63
BUR05017	1/2 bsp x 1 bsp	£27.86
BUR05004	3/4 bsp x 3/4 bsp	£17.90
BUR05010	3/4 bsp x 1 bsp	£27.86
BUR05009	1 bsp x 3/4 bsp	£27.86
BUR05005	1 bsp x 1 bsp	£27.86
BUR05007	1-1/2 bsp x 1-1/2 bsp	£104.80
BUR05008	2 bsp x 2 bsp	£142.75
BUR05016	2-1/2 bsp x 2-1/2 bsp	£POA

NPTF MALE x NPTF FIXED FEMALE 90° COMPACT ELBOW

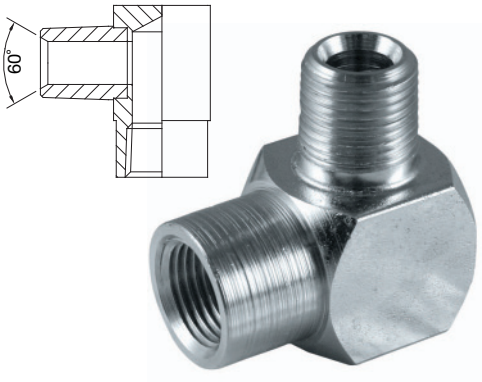

PART NO.	DESCRIPTION	PRICE
BUR07050	1/8 nptf x 1/8 nptf	£17.76
BUR07051	1/4 nptf x 1/4 nptf	£17.76
BUR07047	1/4 nptf x 3/8 nptf	£20.49
BUR07048	3/8 nptf x 1/4 nptf	£20.49
BUR07052	3/8 nptf x 3/8 nptf	£20.49
BUR07046	1/2 nptf x 1/4 nptf	£25.24
BUR07049	1/2 nptf x 3/8 nptf	£25.24
BUR07053	1/2 nptf x 1/2 nptf	£25.24
BUR07045	3/4 nptf x 3/8 nptf	£35.05
BUR07054	3/4 nptf x 3/4 nptf	£35.05
BUR07055	1 nptf x 1 nptf	£55.63
BUR07056	1-1/4 nptf x 1-1/4 nptf	£88.99
BUR07057	1-1/2 nptf x 1-1/2 nptf	£107.91
BUR07058	2 nptf x 2 nptf	£188.51

JIC MALE x JIC SWIVEL FEMALE 90° COMPACT ELBOW

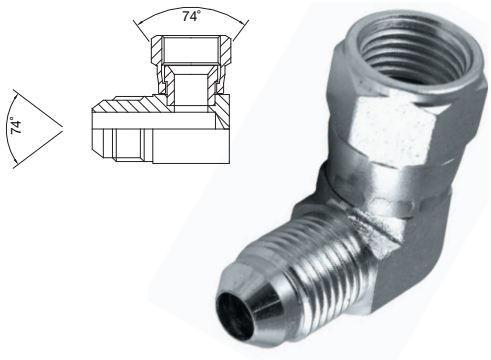

PART NO.	DESCRIPTION	PRICE
BUR05050	7/16 jic x 7/16 jic	£10.32
BUR05051	1/2 jic x 1/2 jic	£10.92
BUR05052	9/16 jic x 9/16 jic	£11.35
BUR05053	3/4 jic x 3/4 jic	£14.26
BUR05062	3/4 jic x 7/8 jic	£18.57
BUR05061	7/8 jic x 3/4 jic	£18.57
BUR05054	7/8 jic x 7/8 jic	£18.57
BUR05055	1-1/16 jic x 1-1/16 jic	£24.36
BUR05057	1-3/16 jic x 1-3/16 jic	£36.91
BUR05056	1-5/16 jic x 1-5/16 jic	£43.89
BUR05058	1-5/8 jic x 1-5/8 jic	£57.41
BUR05059	1-7/8 jic x 1-7/8 jic	£126.06
BUR05063	2-1/2 jic x 2-1/2 jic	£160.66

BSP SWIVEL FEMALE x BSP SWIVEL FEMALE 90° COMPACT ELBOW

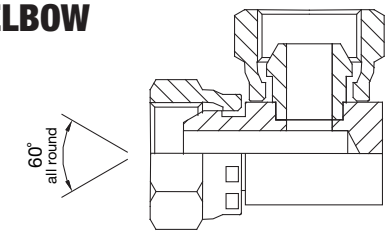

PART NO.	DESCRIPTION	PRICE
BUR05025	1/8 bsp x 1/8 bsp	£10.18
BUR05036	1/8 bsp x 1/4 bsp	£10.18
BUR05026	1/4 bsp x 1/4 bsp	£10.18
BUR05039	1/4 bsp x 3/8 bsp	£10.18
BUR05037	1/4 bsp x 1/2 bsp	£13.96
BUR05027	3/8 bsp x 3/8 bsp	£10.32
BUR05035	3/8 bsp x 1/2 bsp	£13.96
BUR05028	1/2 bsp x 1/2 bsp	£13.96
BUR05040	1/2 bsp x 3/4 bsp	£19.68
BUR05029	5/8 bsp x 5/8 bsp	£17.23
BUR05030	3/4 bsp x 3/4 bsp	£19.71
BUR05038	3/4 bsp x 1 bsp	£24.36
BUR05031	1 bsp x 1 bsp	£24.36
BUR05032	1-1/4 bsp x 1-1/4 bsp	£56.30
BUR05033	1-1/2 bsp x 1-1/2 bsp	£125.16
BUR05034	2 bsp x 2 bsp	£175.96

PLUGS, CAPS & CRIMP NUTS

FLOWFIT

BSP SOLID PLUG

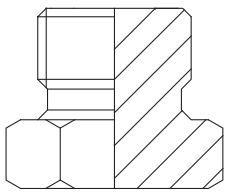

PART NO.	DESCRIPTION	PRICE
BUR09025	1/8 bsp	£1.47
BUR09026	1/4 bsp	£1.56
BUR09027	3/8 bsp	£2.00
BUR09028	1/2 bsp	£2.23
BUR09029	5/8 bsp	£3.12
BUR09030	3/4 bsp	£3.47
BUR09031	1 bsp	£5.18
BUR09032	1-1/4 bsp	£11.82
BUR09033	1-1/2 bsp	£16.33
BUR09034	2 bsp	£25.56
BUR09037	3 bsp	£POA

BSP 60° CONED PLUG

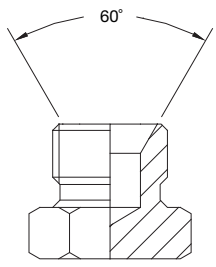

PART NO.	DESCRIPTION	PRICE
BUR09050	1/8 bsp	£1.47
BUR09051	1/4 bsp	£1.56
BUR09052	3/8 bsp	£2.00
BUR09053	1/2 bsp	£2.29
BUR09054	5/8 bsp	£3.19
BUR09055	3/4 bsp	£3.64
BUR09056	1 bsp	£5.43
BUR09057	1-1/4 bsp	£12.02
BUR09058	1-1/2 bsp	£16.86
BUR09059	2 bsp	£25.99
BUR09060	2-1/2 bsp	£70.03
BUR09061	3 bsp	£100.57
BUR09062	4 bsp	£POA

BSP SOCKET HEADED PLUG WITH 3869 SEAL

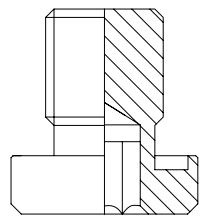

PART NO.	DESCRIPTION	PRICE
BUR3869-02-SPG	1/8 bsp	£1.56
BUR3869-04-SPG	1/4 bsp	£1.94
BUR3869-06-SPG	3/8 bsp	£2.37
BUR3869-08-SPG	1/2 bsp	£3.71
BUR3869-12-SPG	3/4 bsp	£4.56

BSP SWIVEL BLANKING CAP

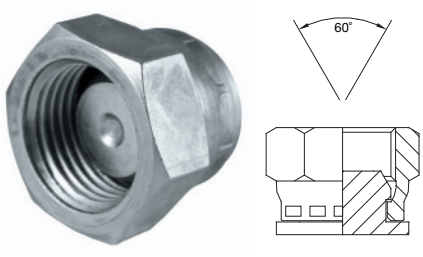

PART NO.	DESCRIPTION	PRICE
9180	1/8 bsp	£3.12
9181	1/4 bsp	£2.82
9182	3/8 bsp	£3.12
9183	1/2 bsp	£3.41
9184	5/8 bsp	£4.30
9185	3/4 bsp	£5.49
9186	1 bsp	£8.26
9187	1-1/4 bsp	£13.67
9188	1-1/2 bsp	£22.13
9189	2 bsp	£44.64

NPTF SOLID PLUG

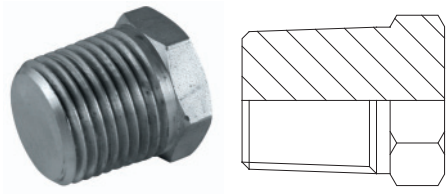

PART NO.	DESCRIPTION	PRICE
BUR09100	1/8 nptf	£1.56
BUR09101	1/4 nptf	£1.56
BUR09102	3/8 nptf	£1.86
BUR09103	1/2 nptf	£2.46
BUR09105	3/4 nptf	£4.45
BUR09106	1 nptf	£7.27
BUR09107	1-1/4 nptf	£15.22
BUR09108	1-1/2 nptf	£21.08
BUR09109	2 nptf	£32.16
BUR09110	2-1/2 nptf	£123.52
BUR09111	3 nptf	£161.84
BUR09113	3-1/2 nptf	£POA
BUR09112	4 nptf	£POA

SAE O RING BOSS MALE SOLID PLUG

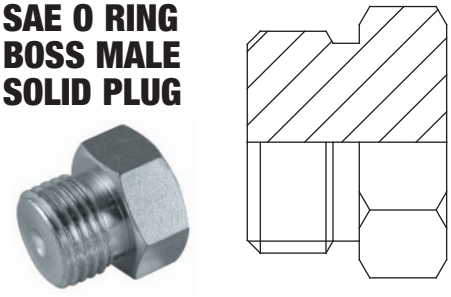

PART NO.	DESCRIPTION	PRICE
BUR09162	5/16 sorb	£2.75
BUR09150	7/16 sorb	£2.29
BUR09151	1/2 sorb	£2.46
BUR09152	9/16 sorb	£2.75
BUR09161	5/8 sorb	£2.98
BUR09153	3/4 sorb	£3.12
BUR09154	7/8 sorb	£3.64
BUR09155	1-1/16 sorb	£5.49
BUR09156	1-3/16 sorb	£6.60
BUR09157	1-5/16 sorb	£9.35
BUR09158	1-5/8 sorb	£16.86
BUR09159	1-7/8 sorb	£22.72
BUR09160	2-1/2 sorb	£33.50

JIC SOLID PLUG

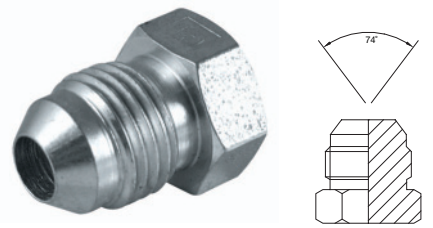

PART NO.	DESCRIPTION	PRICE
BUR09120	5/16 jic	£2.75
BUR09121	7/16 jic	£2.29
BUR09122	1/2 jic	£2.37
BUR09123	9/16 jic	£2.75
BUR09124	3/4 jic	£2.82
BUR09125	7/8 jic	£3.19
BUR09126	1-1/16 jic	£4.67
BUR09127	1-3/16 jic	£6.38
BUR09130	1-5/16 jic	£9.35
BUR09128	1-5/8 jic	£15.30
BUR09129	1-7/8 jic	£19.83
BUR09131	2-1/2 jic	£32.75

BSPT SOLID PLUG

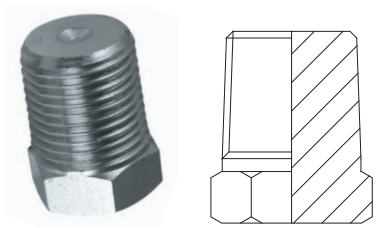

PART NO.	DESCRIPTION	PRICE
BUR09075	1/8 bspt	£1.56
BUR09076	1/4 bspt	£1.71
BUR09077	3/8 bspt	£2.23
BUR09078	1/2 bspt	£2.29
BUR09079	5/8 bspt	£3.26
BUR09080	3/4 bspt	£3.71
BUR09081	1 bspt	£5.57
BUR09082	1-1/4 bspt	£12.55
BUR09083	1-1/2 bspt	£17.52
BUR09084	2 bspt	£29.18
BUR09085	2-1/2 bspt	£123.52

JIC SWIVEL BLANKING CAP

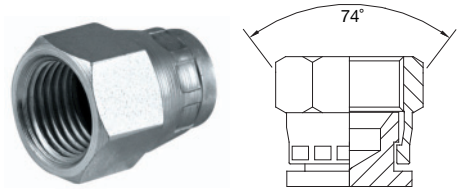

PART NO.	DESCRIPTION	PRICE
9200	7/16 jic	£3.26
9201	1/2 jic	£3.41
9202	9/16 jic	£3.64
9203	3/4 jic	£4.30
9204	7/8 jic	£5.57
9205	1-1/16 jic	£8.01
9209	1-3/16 jic	£9.43
9206	1-5/16 jic	£10.40
9207	1-5/8 jic	£14.33
9208	1-7/8 jic	£22.43
9210	2-1/2 jic	£51.25

SWEPTS, PUSH-INS, HOSE-TAILS & FERRULES

FLOWFIT

BSP MALE x BSP SWIVEL FEMALE 90° SWEPT ELBOW

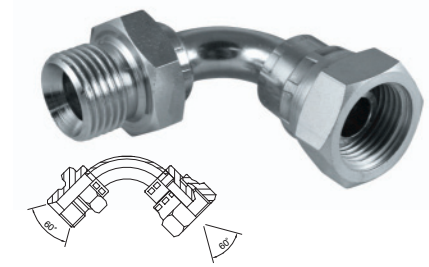

PART NO.	DESCRIPTION	PRICE
BUR06020	1/4 bsp	£8.01
BUR06021	3/8 bsp	£9.73
BUR06022	1/2 bsp	£11.82
BUR06023	5/8 bsp	£16.12
BUR06024	3/4 bsp	£18.42
BUR06025	1 bsp	£29.93
BUR06026	1-1/4 bsp	£46.79
BUR06027	1-1/2 bsp	£112.60
BUR06028	2 bsp	£163.18

BSP SWIVEL FEMALE x PUSH-IN 90° SWEPT

ALL PUSH-INS NOT FOR USE WITH CLIPS OR FERRULES.

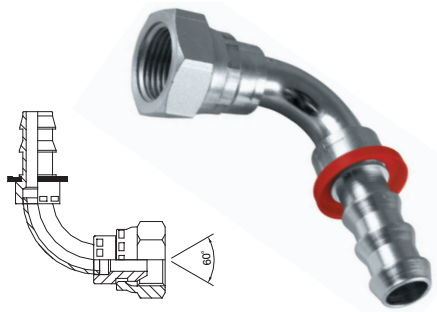

PART NO.	DESCRIPTION	PRICE
BUR09280	1/4 bsp x 1/4 pi	£9.43
BUR09281	3/8 bsp x 3/8 pi	£10.98
BUR09282	1/2 bsp x 1/2 pi	£13.30
BUR09283	5/8 bsp x 5/8 pi	£18.12
BUR09284	3/4 bsp x 3/4 pi	£19.83
BUR09285	1 bsp x 1 pi	£37.87

BSP SWIVEL FEMALE x PUSH-IN STRAIGHT

ALL PUSH-INS NOT FOR USE WITH CLIPS OR FERRULES.

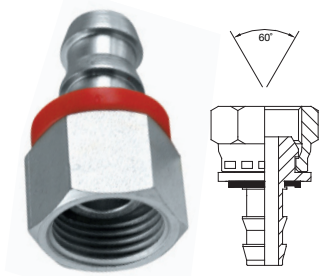

PART NO.	DESCRIPTION	PRICE
9240	1/4 bsp x 1/4 pi	£2.46
9246	1/4 bsp x 3/8 pi	£9.50
9241	3/8 bsp x 3/8 pi	£3.26
9242	1/2 bsp x 1/2 pi	£4.30
9243	5/8 bsp x 5/8 pi	£5.71
9244	3/4 bsp x 3/4 pi	£7.73
9245	1 bsp x 1 pi	£11.97

50% OFF ALL PRICES

BONDED SEALS

Bonded seals are used in pressurised hydraulic systems as a seal between the faces of components.

They consist of a metal washer to which a trapezoidal elastomeric ring is bonded and are designed to work in hydraulic systems where the metal ring ensures that bursting forces applied to the ring are resisted.

These seals come in sizes from 1/8" BSP to 2" BSP in quantaties from 10 to 100 off.

Self Centering
Nitrile Inserts
Mild Steel Cadmium

PART NO.	DESCRIPTION	PRICE
BS1810	Pack of 10 bonded seals 1/8"	£2.61
BS1825	Pack of 25 bonded seals 1/8"	£6.55
BS1850	Pack of 50 bonded seals 1/8"	£13.09
BS18100	Pack of 100 bonded seals 1/8"	£25.75
BS1410	Pack of 10 bonded seals 1/4"	£2.61
BS1425	Pack of 25 bonded seals 1/4"	£6.55
BS1450	Pack of 50 bonded seals 1/4"	£13.09
BS14100	Pack of 100 bonded seals 1/4"	£26.20
BS3810	Pack of 10 bonded seals 3/8"	£2.88
BS3825	Pack of 25 bonded seals 3/8"	£6.87
BS3850	Pack of 50 bonded seals 3/8"	£14.43
BS38100	Pack of 100 bonded seals 3/8"	£28.81
BS1210	Pack of 10 bonded seals 1/2"	£3.15
BS1225	Pack of 25 bonded seals 1/2"	£7.85
BS1250	Pack of 50 bonded seals 1/2"	£15.72
BS12100	Pack of 100 bonded seals 1/2"	£31.44
BS5810	Pack of 10 bonded seals 5/8"	£3.89
BS5825	Pack of 25 bonded seals 5/8"	£9.83
BS5850	Pack of 50 bonded seals 5/8"	£19.65
BS58100	Pack of 100 bonded seals 5/8"	£39.29
BS3410	Pack of 10 bonded seals 3/4"	£3.89
BS3425	Pack of 25 bonded seals 3/4"	£9.83
BS3450	Pack of 50 bonded seals 3/4"	£19.65
BS34100	Pack of 100 bonded seals 3/4"	£39.29
BS7810	Pack of 10 bonded seals 7/8"	£6.55
BS7825	Pack of 25 bonded seals 7/8"	£16.37
BS7850	Pack of 50 bonded seals 7/8"	£32.76
BS78100	Pack of 100 bonded seals 7/8"	£65.51
BS110	Pack of 10 bonded seals 1"	£6.55
BS125	Pack of 25 bonded seals 1"	£16.37
BS150	Pack of 50 bonded seals 1"	£32.75
BS1100	Pack of 100 bonded seals 1"	£65.51
BS11410	Pack of 10 bonded seals 1 1/4"	£11.53
BS11425	Pack of 25 bonded seals 1 1/4"	£28.81
BS11450	Pack of 50 bonded seals 1 1/4"	£57.64
BS114100	Pack of 100 bonded seals 1 1/4"	£115.30
BS11210	Pack of 10 bonded seals 1 1/2"	£13.62
BS11225	Pack of 25 bonded seals 1 1/2"	£34.06
BS11250	Pack of 50 bonded seals 1 1/2"	£68.13
BS112100	Pack of 100 bonded seals 1 1/2"	£136.25
BS210	Pack of 10 bonded seals 2"	£20.44
BS225	Pack of 25 bonded seals 2"	£51.10
BS250	Pack of 50 bonded seals 2"	£102.19
BS2100	Pack of 100 bonded seals 2"	£204.35

FLUID TRANSFER

HF10 FILTRATION UNIT 623
SUPER DELUXE PORTABLE FILTRATION UNIT.....623
VISCOMAT OIL TRANSFER PUMPS 624
DC PUMPS VISCOMAT DC.....624
HAND OPERATED PUMPS FOR OIL DRUMS 625
CLEAN OIL TRANSFER SYSTEMS 12v.....625
CLEAN OIL TRANSFER SYSTEMS 240v.....626
DRUM AND TANK TRANSFER UNITS.....626
MECHANICAL FLOW METERS 626
SELF 3000 NOZZLES 626

FLOWFIT

50% OFF ALL PRICES

HF10 FILTRATION UNIT

The HF10 range of trollies is the ideal tool for decontaminating oil by removing suspended particles either by flushing or continuous cleaning. It is well suited for pre-filtering and transfer of fluids as well as removing water from hydraulic systems (Optional water removal filter required)

BENEFITS
Reduces maintenance costs and down time through regular use which extends the life of the oil which ultimately helps the environment as well as costs through improved productivity and reduced oil dispersal.

TECHNICAL FEATURES
Wheeled tubular support with anti-corrosion treatment and paint finish for outdoor use.
Easy to use with a powerful electric pump and self-primimg vane pump equipped with a bypass safety system.
Self ventilated IP55 induction motor with thermal protection and cut-off switch.
Interchangeable cartridge filter to allow different elements for filtration of copper, metal and sand complete with manometer to signal filter clogging.
Helically wound transparent suction and output tubing.

TECHNICAL DATA
Flowrate of 25l/min on 110v and 240v with the 450v version giving up to 40 l/min.
Power rate 750 watts 0.75 kW.
Speed 1450 rpm.
Operating temperature Min -10 degree Celsius to Max +40 degrees Celsius.
Releative humidity Max 90%.
Viscosity 20 – 50 cSt.
Fluid permiited – Hydraulic oil, engine oil and diesel.
Fluids not permitted – Gasoline, benzin, inflammable liquids with fp < 55 degrees Celsius, water, solvents and liquid food products.
Maximim oil pump capacity of 4 metres @ 30 cSt.
2.5m x 20mm diameter Return line tube, pvc spiral, with a 0.5m metal tube on end.
2m x 20mm diameter suction line tube, pvc spiral, complete with metal wire filter strainer.

TECHNICAL DIMENSIONS
Height 660mm, Width 310mm, Depth 400mm,
Weight from 21kg

ORDER CODE	FLOW RATE	FILTRATION	VOLTAGE	PRICE
HF10	25 L/Min	10 Micron Paper	240	£1385.49
HF10110V	25 L/Min	10 Micron Paper	110	£1455.99

ELEMENTS	DESCRIPTION	PRICE
A110G03	3 Micron Absolute Fibreglass	£71.02
A110G06	6 Micron Absolute Fibreglass	£72.23
A110G10	10 Micron Absolute Fibreglass	£62.02
A110G25	25 Micron Absolute Fibreglass	£66.48
A110C10	10 Micron Nominal Paper	£31.32
A110C25	25 Micron Nominal Paper	£29.38
A110CW10	10 Micron Water Removal	£91.61
A110T60	60 Micron Nominal Wiremesh	£67.53
A110T90	90 Micron Nominal Wiremesh	£71.03
A110T125	125 Micron Nominal Wiremesh	£60.53

SUPER DELUXE PORTABLE FILTRATION UNIT

The super deluxe portable filtration unit offers flow rates upto 75 l/min with filtration levels available from 3 micron upto 25 micron on return and 25 micron upto 125 micron on suction.

BENEFITS
Compact lightweight construction comprising of a sturdy steel frame.
Flow rates up to 75 l/min.
Maximum dirt holding capacity elements.
Available with filters from 3 micron upto 125 micron.
Elements available for water removal.

TECHNICAL DATA
0.75 kw electric motor complete with 5 metre power cable and electric control box.
Visual contamination indicators.
3 Metre wire reinforced suction and discharge hose.0.75 metre dip tubes with easy access stowage points.
Fitted with standard buna nitrile seals
(max temp 90 degree Celsius.
Viton seals upto 110 degrees Celsius available on request.
Viscosity range 7-750 cSt.
Oil lift pumping capacity to height of
2 metres @ 30 cSt
Heavy duty trolley and wheels.

ORDER CODE	FLOW	VOLTAGE	KW	INLET FILTER	OUTLET FILTER	LIST PRICE
HFT620-2-2-MS060-SP010-B	25 L/Min	240Vac	0.8	60 Micron Wiremesh	10 Micron Paper	£2297.94
HFT620-2-4-MS060-SP010-B	25 L/Min	415Vac	0.8	60 Micron Wiremesh	10 Micron Paper	£2305.15
HFT620-5-2-MS060-SP010-B	50 L/Min	240Vac	0.8	60 Micron Wiremesh	10 Micron Paper	£2365.27
HFT620-5-4-MS060-SP010-B	50 L/Min	415Vac	0.8	60 Micron Wiremesh	10 Micron Paper	£2365.27
HFT620-7-2-MS060-SP010-B	75 L/Min	240Vac	1.1	60 Micron Wiremesh	10 Micron Paper	£2625.87
HFT620-7-4-MS060-SP010-B	75 L/Min	415Vac	1.1	60 Micron Wiremesh	10 Micron Paper	£2405.38

VISCOMAT OIL TRANSFER PUMPS

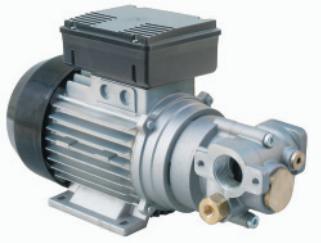

The viscomat range is a family of internal profile or vane gear pumps designed to give an effective solution for the various requirements of pumping oil and lubricants.
Common features are quiet operation, regularity of flow due to the absence of pulsations, the ability to function with the delivery closed as a result of an incorporated bypass, high suction capacity and a compact design.

CONSTRUCTION
Asynchronous, closed, self ventilating, ac motor (protection IP55) available in various voltages and frequencies, die cast aluminium pump body, by-pass integrated into the pump body, 1" female inlet/outlet ports.

VISCOSITY
Viscomats 70 and 90 (Vane type) up to 500 cSt
Viscomats 200/230 (Gear type) up to 2000 cSt

ORDER CODE	FLOW RATE	PRESSURE	MOTOR SINGLE PHASE	MOTOR 3 PHASE	RPM	POWER WATT	WEIGHT	PRICE
VISCOMAT70230V	25 L/Min	6 bar	230v 50 Hz	-	1450	750	14.1kg	£887.62
VISCOMAT70400V	25 L/Min	6 bar	-	400v 50Hz	1450	750	14.1kg	£887.22
VISCOMAT70110V	25 L/Min	6 bar	110v 50 Hz	-	1450	1200	14.1kg	£1118.10
VISCOMAT90400V	50 L/Min	5 bar	-	400v 50Hz	1450	2000	14.1kg	£1003.97
VISCOMAT200230V	9 L/Min	12 bar	230v 50 Hz	-	1450	550	9kg	£988.05
VISCOMAT200400V	9 L/Min	12 bar	-	400v 50Hz	1450	550	9kg	£988.05
VISCOMAT200110V	9 L/Min	12 bar	110v 60Hz	-	1730	950	9kg	£1101.91
VISCOMAT230230V	14 L/Min	12 bar	230v 50 Hz	-	1450	750	12.5kg	£1220.90
VISCOMAT230400V	14 L/Min	12 bar	-	400v 50Hz	1450	750	12.5kg	£1220.90

DC PUMPS VISCOMAT DC

A range of pumps for the transferring and delivery of oil by direct current which allows the task to be performed where electricity or pneumatic connections are not available hence allowing oil transfer and handling operations in yards, ports, on vehicles or boats.

SPECIFICATION
Gear pump type
High pressure
Direct current brush motor with brush magnets.
Aluminium pump body
Sintered steel gears
Threaded entry and exit connectors
Bypass valve incorporated in pump body
Protection motor IP55

PERFORMANCE
Flow rate from 4 to 10 L/min
Operating pressure 4 to 10 bar
Oil viscosity upto 2000cSt
Duty cycle 30 mins
Noise level less than 65DB

ORDER CODE	DESCRIPTION	RATE	BAR	OUTLET	VOLTAGE	AMPS	CYCLE	WEIGHT	PRICE
F00309020	DC60/1 12V	4 L/Min	5	1/2"	12	16	30mins	3kg	£603.33
F00309010	60/2 12V	10 L/Min	4	3/4"	12	35	30mins	4.9kg	£667.78
F00309000	DC120/1 12V	5 L/Min	10	1/2"	12	25	30mins	4.9kg	£667.78
F00310020	60/1 24V	4 L/Min	5	1/2"	24	9	30mins	3kg	£602.35
F00310010	60/2 24V	10 L/Min	4	3/4"	24	18	30mins	4.9kg	£710.62
F00310000	120/1 24V	5 L/Min	10	1/2"	24	12	30mins	4.9kg	£668.54

50% OFF ALL PRICES

HAND OPERATED PUMPS FOR OIL DRUMS

ROTARY VANE TYPE

Manual action pumps suitable for transferring fluids listed.
Characterised by ease of installation, simplicity of operation, dependability and economy.

Construction available in cast alloy or cast iron • 250cm3/cycle • Rigid 1 metre suction pipe with 2" drum connector.
Capable of flow rates up to approx 25 l/min.

ORDER CODE	CONSTRUCTION	CYCLE	FLOWRATE	DIESEL	OIL	RAPS OIL	PETROL	PRICE
332000	Cast Alloy	350cm3	25 L/Min	YES	YES	YES	YES	£124.02
CTS2001	Cast Iron	350cm3	25 L/Min	YES	YES	NO	NO	£65.50

DOUBLE ACTING SEMI-ROTARY HAND PUMPS

Manual action pumps suitable for transferring fluids listed.
Characterised by ease of installation, simplicity of operation, dependability and economy.

Construction in cast Iron with wooden spindled handle • Flanged fittings on both sides.
Available upon request in other sizes up to 2" • Capable of flow rates up to approx 25 l/min.

ORDER CODE	CONSTRUCTION	FLANGE SIZE	FLOWRATE	DIESEL	PRICE
CTS5010	Cast Iron	1/2" BSP	25 L/Min	YES	£129.40
CTS5011	Cast Iron	3/4" BSP	25 L/Min	YES	£140.20
CTS5000	Cast Iron	1" BSP	25 L/Min	YES	£174.38

LEVER OPERATED TRANSFER PUMP

Manual lever operated transfer pumps designed for the fast movement of lubricants, oils and diesels.

Construction in Aluminium • 2" drum connectors • Capable of flows up to approx 25 l/min

ORDER CODE	CONSTRUCTION	CONNECTOR	FLOWRATE	DIESEL	OIL	PRICE
CTS2000	Aluminium	2"	25 L/Min	YES	YES	£59.30

CLEAN OIL TRANSFER SYSTEMS 12v

The oil transfer system unit is designed for transferring of oils where you are located with out the need for mains power or compressed air. This is achieved through the built-in battery and charger. The battery must be recharged after transferring approx 2-3 drums of oil.

PERFORMANCE
Flow rate 6 L/min
Noise levels less than 65 DB
Motor supply 12vdc
Oil viscosity from 10 to 2000 cSt
On demand dispensing with pressure switch
Flow meter (Item 2 only) with precision of +/- 0.5%

SPECIFICATIONS
Tubular structure trailer mounted support for moving drums,
Complete with nozzle support, pipe support and drip collector.
Self priming pump with DC motor, 12vdc
Protection Rating IP55
3/4" gas suction pipe with filter.
3 Metre long 5/8" gas delivery pipe.
Delivery nozzle with flexible end and non-drip valve. Item 2 comes with meter.
Pressure switch with incorporated safety valve.
Battery with battery charger.

OPTIONAL EXTRAS
Flow meters with oval gears

ORDER CODE	FLOW RATE	VOLTAGE	PRESSURE SWITCH	FLUID	METER	VISCOSITY	PRICE
VISCOTROLL 120/1 DC pst	6 L/Min	12 DC	YES	OIL	NO	Up to 2000cSt	£3155.01
VISCOTROLL 120/1 DC pst K400	6 L/Min	12 DC	YES	OIL	YES	Up to 2000cSt	£3779.83

CLEAN OIL TRANSFER SYSTEMS 240v

This unit is designed for transferring of oils within the workshop environment as it is powered by 230v electricity.

PERFORMANCE
Flow rate 25 L/min
Operating pressure 6-12 bar
Noise levels less than 65 DB
Oil viscosity from 10 to 2000 cSt

SPECIFICATIONS
Tubular structure trailer mounted support for moving drums,
Complete with nozzle support, pipe support and drip collector.
Self priming pump with AC asynchronous motor, self-ventilating closed (ProtectionRating IP55) at 230v
1" gas suction pipe with standing valve and filter.
4 Metre long ?" gas delivery pipe.
Delivery nozzle with flexible end and automatic non-drip valve.

OPTIONAL EXTRAS
Flow meters.
Pressure switch with incorporated safety valve.
Viscosity of 2000cSt on a 9 l/min version.

ORDER CODE	FLOW RATE	VOLTAGE	POWER KW	FLUID	METER	VISCOSITY	PRICE
VISCOTROLL 70	25 L/Min	230	0.75	OIL	NO	Up to 500cSt	£1606.82
VISCOTROLL 70/K33	25 L/Min	230	0.75	OIL	YES	Up to 500cSt	£1965.22

DRUM AND TANK TRANSFER UNITS

This range has been developed for the easy connection to tanks and drums and offers a simple and efficient solution for transferring or dispensing of fluids.
Optional extras are available on some models for flow metres to control the amount of fluid to disperse or to limit the users consumption.
A variety of motor voltages and flow rates are clearly shown in the table below.
The unit comes with a suction tube for direct connection to your tank or drum and a nozzle holder placed near the pump to ensure clean and easy operation.
Standard hose delivery length is 4 metres.
Unit suitable for diesel, oil and raps oil as shown in table below.

ORDER CODE	VOLTAGE	FLOWRATE	HOSE LENGTH	HOSE SIZE	WEIGHT	METER	FLUIDS	PRICE
DRUMVCT70	230	28 L/Min	4m	3/4"	18 kg	No	Oil & Raps Oil	£915.09
DRUMVCT200	230	9 L/Min	4m	1/2"	18 kg	No	Oil	£921.55
DRUMVCT70K33	230	25 L/Min	4m	3/4"	19 kg	Yes	Oil & Raps Oil	£1275.98
DRUM20001260	12	38 L/Min	4m	3/4"	10 kg	No	Diesel	£1159.29
DRUM20002460	24	38 L/Min	4m	3/4"	10 kg	No	Diesel	£1159.29
DRUMB112120	12	80 L/Min	4m	1"	18 kg	No	Diesel	£1639.18
DRUMB124120	24	80 L/Min	4m	1"	18 kg	No	Diesel	£1639.18

MECHANICAL FLOW METERS

This range of nutating-disk meters measure the exact quantity of fuel or lubricants that have been dispensed. They have been designed strictly for non commercial use and are very reliable, inexpensive, easy to install and simple to calibrate within the work place.

PERFORMANCE
Flow rate 20-120 L/min.
Precision +/- 1% of flow range after calibration.
Max Operating pressure 10 bar (142 psi).
Bursting pressure 30 bar (426 psi).
Resolution 0.1 litres.
Readout as follows:-
K33 – 3 digit subtotals (Max 999 litres) 6 digit totals.
K44 – 4 digit subtotals (Max 9999 litres) 7 digit totals.

SPECIFICATIONS
Aluminium metering chamber with polybutylene nutating disk.
1" G inlet, 1" g outlet, in line.
The top plate can be rotated to allow flow from either position.
Mechanical readout device with rotating wheels.
Subtotals can be set to zero, total readout cannot be reset.
Available with litre or gallon readouts.

OPTIONAL EXTRAS
A pulser model is available upon request for connection to a fuel management system.

ORDER CODE	FLOW RATE L/MIN	MAX OPERATING PRESSURE	IN/OUT CONNECTIONS	WEIGHT	SUITABLE FOR DIESEL	SUITABLE FOR OIL	SUITABLE FOR RAPS OIL	PRICE
K33 diesel	20-120	230	1"	2kg	YES	NO	NO	£339.70
K33	20-120	230	1"	2kg	NO	YES	YES	£339.70
K44 diesel	20-120	230	1"	2kg	YES	NO	NO	£442.15
K44	20-120	230	1"	2kg	NO	YES	YES	£442.15

SELF 3000 NOZZLES

Manual nozzles have been designed to satisfy the need of safety, ease of handling and efficiency. The nozzles are manufactured with a resistant aluminium body enclosed in an anti-shock plastic shell which increases the nozzles ease of handling by making the grip comfortable even when working at low temperatures. The integrated swivel connector, and the hammer free valve inside it, guarantees a high degree of safety. The low loss of head, given the conformation of the valve, allos it to function at upto 150 L/min.

CTS CODE	DESCRIPTION	FLOW	BAR	PRICE
650000	Self 3000 Nozzle	Upto 150l/min	Upto 10	£59.30

50% OFF ALL PRICES

NEW

ELECTRIC MOTORS

NEW

SERIES ALUMINIUM HOUSING SINGLE-PHASE 240V MULTI-MOUNT ASYNCHRONOUS MOTOR-DUAL CAPACITORS.....628
WIRING DIAGRAMS.....628
OVERALL & INSTALLATION DIMENSIONS.....629
TECHNICAL DATA @ 110V/50HZ.....630
TECHNICAL DATA @ 230V/50HZ.....630
SERIES ALUMINIUM HOUSING THREE-PHASE MULTI-MOUNT ASYNCHRONOUS MOTOR 631
WIRING DIAGRAMS.....632
OVERALL & INSTALLATION DIMENSIONS ALUMINIUM HOUSING 633
TECA SERIES IE1 EFFICIENCY MOTORS TECHNICAL DATA (AT 50HZ) ALUMINIUM HOUSING.....633
OVERALL & INSTALLATION DIMENSIONS CAST IRON HOUSING.....634
IE1 EFFICIENCY MOTORS TECHNICAL DATA CAST IRON HOUSING.....635

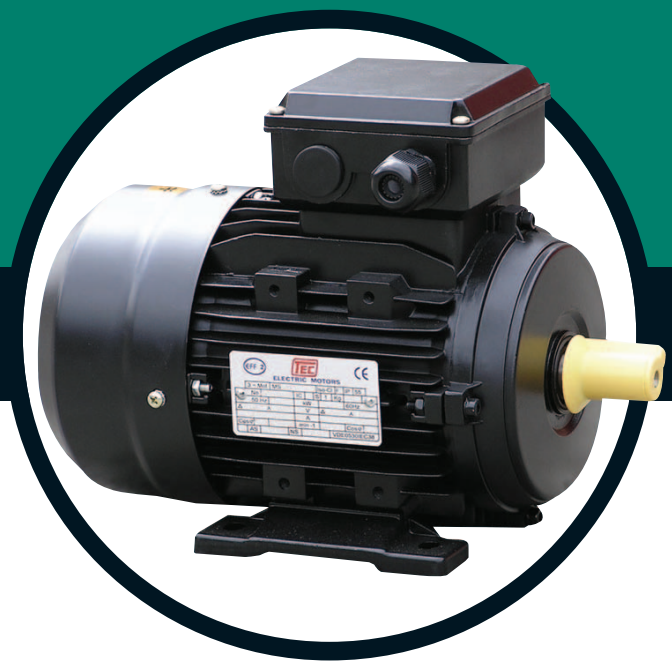

FLOWFIT

SERIES ALUMINIUM HOUSING SINGLE-PHASE 240V MULTI-MOUNT ASYNCHRONOUS MOTOR-DUAL CAPACITORS

TCC aluminium multi-mount single phase 24OV dual capacitor asynchronous motors are manufactured to the latest design. All motors conform to IEC standards and offer a comprehensive range up to 3.7KW and aesthetically pleasing design with the flexibility of a multi-mount terminal box and available in all mounting configurations including B14B and B5R. They are suitable for applications where torque requirements are 1.8-2.5 times F.L.T.

PART NO	DESCRIPTION	LIST PRICE
0.3741TCCB35	0.37kw 4 Pole B35 1 Phase 240V 160mm DIA 14mm Shaft D71 CAP Start - CAP Run	£174.01

PART NO	DESCRIPTION	LIST PRICE
0.5541TCCB35	0.55kw 4 Pole B35 1 Phase 240V 200mm DIA 19mm Shaft D80 CAP Start - CAP Run	£228.96

PART NO	DESCRIPTION	LIST PRICE
0.7541TCCB35	0.75kw 4 Pole B35 1 Phase 240V 200mm DIA 19mm Shaft D80 CAP Start - CAP Run	£247.28

PART NO	DESCRIPTION	LIST PRICE
1.141TCCB35	1.1kw 4 Pole B35 1 Phase 240V 200mm DIA 24mm Shaft D90S CAP Start - CAP Run	£304.52

PART NO	DESCRIPTION	LIST PRICE
1.541TCCB35	1.5kw 4 pole B35 1 Phase 240V 200mm DIA 24mm Shaft D90L CAP Start - CAP Run	£368.63

PART NO	DESCRIPTION	LIST PRICE
2.241TCCB35	2.2kw 4 Pole B35 1 Phase 240V 250mm DIA 28mm Shaft D100 CAP Start - CAP Run	£485.40

PART NO	DESCRIPTION	LIST PRICE
3.041TCCB35	3kw 4 Pole B35 1 Phase 240V 250mm DIA 28mm Shaft D100 CAP Start - CAP Run	£680.01

PART NO	DESCRIPTION	LIST PRICE
3.741TCCB35	3.7kw 4 Pole B35 1 Phase 240V 250mm DIA 28mm Shaft D112 CAP Start - CAP Run	£778.46

N.B.: it is recommended that single phase motors are not stop/started more than 15 times within a 1 hour period in order to allow safe discharge of capacitors.

WIRING DIAGRAMS

TCC

SERIES ALUMINIUM HOUSING SINGLE-PHASE MULTI-MOUNT ASYNCHRONOUS MOTOR -DUAL CAPACITORS

TCC aluminium multi-mount single phase dual capacitor asynchronous motors are manufactured to the latest design. All motors conform to IEC standards and offer a comprehensive range up to 3.7KW and an ascetically pleasing design with the flexibility of a multi-mount terminal box and available in all mounting configurations including B14B and B5R. They are suitable for applications where starting torque requirements are 1.8-2.5 times F.L.T.

N.B.: it is recommended that single phase motors are not stop/started more than 15 times in 1 hour in order to allow safe discharge of capacitors

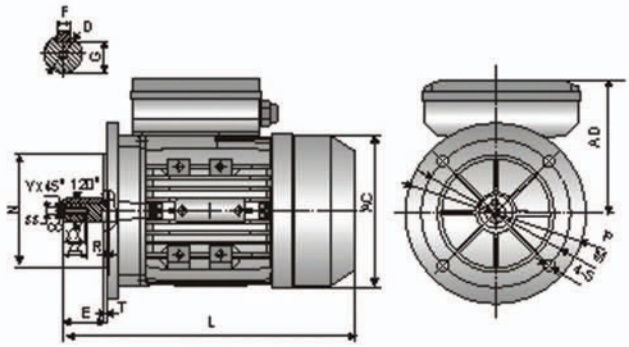

OVERALL & INSTALLATION DIMENSIONS

Frame Size	MOUNTING DIMENSIONS																						OVERALL DIMENSIONS					SHAFT END SCREW DIMENSIONS				
	IMB14															IMB5																	
	A	B	C	D	E	F	G	H	K	M	N	P	R	S	T	M	N	P	R	S	T	AA	AC	AD	HD	L	SS	XX	ZZ	CC	Y
63	100	80	40	11	23	4	8.5	63	7X10	75	60	90	0	M5	2.5	115	95	140	0	Φ 10	3.0	120	130	179	116	212	M4	10	15	3.3	0.8
71	112	90	45	14	30	5	11	71	7X10	85	70	105	0	M6	2.5	130	110	160	0	Φ 10	3.5	132	145	194	123	255	M5	12	18	4.2	0.8
80	125	100	50	19	40	6	15.5	80	10X13	100	80	120	0	M6	3.0	165	130	200	0	Φ 12	3.5	157	165	223	143	290	M6	16	22	5	1
90S	140	100	56	24	50	8	20	90	10X13	115	95	140	0	M8	3.0	165	130	200	0	Φ 12	3.5	172	185	240	150	335	M8	20	25	6.8	1
90L	140	125	56	24	50	8	20	90	10X13	115	95	140	0	M8	3.0	165	130	200	0	Φ 12	3.5	172	185	240	150	365	M8	20	25	6.8	1
100L	160	140	63	28	60	8	24	100	12X15	130	110	160	0	M8	3.5	215	180	250	0	Φ 15	4.0	196	205	260	160	445	M10	22	28	8.5	1.5
112M	190	140	70	28	60	8	24	112	12X15	130	110	160	0	M8	3.5	215	180	250	0	Φ 15	4.0	222	230	295	183	453	M10	22	28	8.5	1.5

TECHNICAL DATA @ 110V/50HZ

Model	Power (kW)	Current (A) 110V	Speed (r/min)	Eff. (%)	Power Factor	Rated Torque (N.m)	Tstart/Tn (Times)	Tmax/Tn (Times)	Starting Current (A)	Run Capactior (μf/V)	Start Capacitor (μf/V)	Noise dB(A)	Wt. (Kg)
TCC631-2	0.18	2.89	2710	63	0.9	0.63	1.8	1.6	16	30μF/250V	100μF/125V	70	4.2
TCC632-2	0.25	3.95	2710	64	0.9	0.88	1.8	1.6	20	40μF/250V	100μF/125V	73	4.7
TCC711-2	0.37	5.40	2780	67	0.93	1.27	2.0	1.8	30	40μF/250V	200μF/125V	75	5.3
TCC712-2	0.55	7.68	2790	70	0.93	1.88	2.0	1.8	40	60μF/250V	300μF/125V	76	7.4
TCC801-2	0.75	9.97	2800	72	0.95	2.56	2.5	1.8	60	80μF/250V	400μF/125V	76	9.5
TCC802-2	1.1	14.04	2810	75	0.95	3.74	2.5	1.8	80	100μF/250V	600μF/125V	79	11.2
TCC90S-2	1.5	18.89	2810	76	0.95	5.10	2.5	1.8	110	140μF/250F	800μF/125V	84	14
TCC90L-2	2.2	27.34	2810	77	0.95	7.48	2.5	1.8	150	160μF/250V	1000μF/125V	84	17
TCC100L-2	3.0	36.34	2830	79	0.95	10.13	2.5	1.7	220	180μF/250V	1400μF/125V	88	25
TCC631-4	0.12	2.20	1350	55	0.9	0.85	2.5	1.6	12	30μF/250V	100μF/125V	64	4.1
TCC632-4	0.18	3.25	1350	56	0.9	1.27	1.8	1.6	17	40μF/250V	100μF1/25V	64	4.4
TCC711-4	0.25	4.21	1380	60	0.9	1.73	1.8	1.7	20	40μF/250V	150μF/125V	66	5.9
TCC712-4	0.37	5.93	1380	63	0.9	2.56	2.0	1.7	30	40μF/250V	200μF/125V	68	6.9
TCC801-4	0.55	8.42	1400	66	0.9	3.75	2.0	1.8	40	70μF/250V	300μF/125V	71	9.6
TCC802-4	0.75	10.98	1410	69	0.9	5.08	2.5	1.8	60	90μF/250V	400μF/125V	71	10.8
TCC90S-4	1.1	14.73	1410	73	0.93	7.45	2.5	1.8	80	120μF/250V	600μF/125V	74	13.5
TCC90L-4	1.5	19.81	1400	74	0.93	10.24	2.5	1.8	110	140μF/250V	800μF/125V	79	16.5
TCC100L1-4	2.2	28.30	1430	76	0.93	14.70	2.5	1.8	150	170μF/250V	1300μF/125V	79	24
TCC100L2-4	3	38.09	1440	77	0.93	19.91	2.5	1.8	220	200μF/250V	1600μF/125V	83	30

TECHNICAL DATA @ 230V/50HZ

Model	Power (kW)	Current (A) 230V	Speed (r/min)	Eff. (%)	Power Factor	Rated Torque (N.m)	Tstart/Tn (Times)	Tmax/Tn (Times)	Starting Current (A)	Run Capactior (μf/V)	Start Capacitor (μf/V)	Noise dB(A)	Wt. (Kg)
TCC631-2	0.18	1.38	2710	63	0.9	0.63	2.5	1.6	8	10μF/450V	30μF/250V	70	4.2
TCC632-2	0.25	1.89	2710	64	0.9	0.88	2.5	1.6	10	12μF/450V	40μf/250V	73	4.7
TCC711-2	0.37	2.66	2780	65	0.93	1.27	2.5	1.8	15	12μF/450V	75μF/250V	75	5.3
TCC712-2	0.55	3.78	2790	68	0.93	1.88	2.5	1.8	20	16μF/450V	100μF/250V	76	7.4
TCC801-2	0.75	4.87	2800	72	0.93	2.56	2.5	1.8	30	20μF/450V	100μF/250V	76	9.5
TCC802-2	1.1	7.04	2810	73	0.93	3.74	2.5	1.8	40	30μF/450V	150μF/250V	79	11.2
TCC90S-2	1.5	9.48	2810	74	0.93	5.10	2.5	1.8	55	40μF/450F	200μF/300V	84	14
TCC90L-2	2.2	13.57	2810	75	0.94	7.48	2.5	1.8	75	50μF/450V	250μF/300V	84	17
TCC100L-2	3.0	17.83	2830	77	0.95	10.13	2.5	1.7	110	60μF/450V	400μF/300V	88	25
TCC112M1-2	3.7	21.48	2850	78	0.96	12.40	2.5	1.7	140	60μF/450V	600μF/300V	90	30.5
TCC112M2-2	4.0	22.18	2850	80	0.98	13.41	2.5	1.7	150	60μF/450V	600μF/300V	90	31.5
TCC631-4	0.12	1.05	1350	55	0.9	0.85	2.5	1.6	6	10μF/450V	30μF/250V	64	4.1
TCC632-4	0.18	1.55	1350	56	0.9	1.27	2.5	1.6	8.5	12μF/450V	40μF/250V	64	4.4
TCC711-4	0.25	2.01	1380	60	0.9	1.73	2.5	1.7	10	12μF/450V	50μF/250V	66	5.9
TCC712-4	0.37	2.84	1380	63	0.9	2.56	2.5	1.7	15	16μF/450V	75μF/250V	68	6.9
TCC801-4	0.55	4.03	1400	66	0.9	3.75	2.5	1.8	20	20μF/450V	100μF/250V	71	9.6
TCC802-4	0.75	5.25	1410	69	0.9	5.08	2.5	1.8	30	25μF/450V	100μF/250V	71	10.8
TCC90S-4	1.1	7.24	1410	71	0.93	7.45	2.5	1.8	40	35μF/450V	150μF/250V	74	13.5
TCC90L-4	1.5	9.61	1400	73	0.93	10.24	2.5	1.8	55	40μF/450V	200μF/300V	79	16.5
TCC100L1-4	2.2	13.90	1430	74	0.93	14.70	2.5	1.8	75	50μF/450V	300μF/300V	79	24
TCC100L2-4	3	18.70	1440	75	0.93	19.91	2.5	1.8	110	60μF/450V	500μF/300V	83	30
TCC112M1-4	3.7	21.99	1440	77	0.95	24.55	2.5	1.7	140	60μF/450V	600μF/300V	86	36
TCC112M2-4	4.0	22.41	1440	80	0.97	26.54	2.5	1.7	150	60μF/450V	600μF/300V	86	37.5

50% OFF ALL PRICES

SERIES ALUMINIUM HOUSING THREE-PHASE MULTI-MOUNT ASYNCHRONOUS MOTOR

TECA series Aluminium Housing 3 Phase Multi-mount motors up to 200 frame, utilising new automated production technology. The motors are manufactured to IEC standard.

Motors are: Easily maintained, light weight with high performance and low noise levels. The multi-mount design offers both O.E.M and stockist greater flexibility where terminal box position is important.

Note – Motors up to and including 15kw are Aluminium housings. 18.5kw upwards are Cast Iron Housing.

Series Three-Phase Induction Motors Cast Iron Housing

Multi-mount from 80 to 200 frame

- Frame size H63-355
- Power 0.12~315kw
- Synchronous speed 3000; 1500; 1000; 750RPM
- Voltage 230/400V; 400/690V
- Frequency 50Hz, 60Hz
- Protection class IP55
- Insulation class F
- Ambi temperature -30~+40ŻC
- Altitude above sea level ≤ 1000m

PART NO	DESCRIPTION	LIST PRICE
0.3743TECAB35	0.37kw 3PH B35 4 Pole 415V 160mm, Shaft DIA 14mm TECA Aluminium Housing	£174.01
0.5543TECAB35	0.55kw 3PH B35 4 Pole 415V 200mm, Shaft DIA 19mm TECA Aluminium Housing	£119.06
0.7543TECAB35-IE2	0.75kw 3PH B35 4 Pole 415V 200mm, Shaft DIA 19mm TECA Aluminium Housing	£189.03
1.143TECAB35-IE2	1.1kw 3PH B35 4 Pole 415V 200mm, Shaft DIA 24mm TECA Aluminium Housing	£244.35
1.543TECAB35-IE2	1.5kw 3PH B35 4 Pole 415V 200mm, Shaft DIA 24mm TECA Aluminium Housing	£288.28
2.243TECAB35-IE2	2.2kw 3PH B35 4 Pole 415V 250mm, Shaft DIA 28mm TECA Aluminium Housing	£324.70
3.043TECAB35-IE2	3kw 3PH B35 4 Pole 415V 250mm, Shaft DIA 28mm TECA Aluminium Housing	£369.20
4.043TECAB35-IE2	4kw 3PH B35 4 Pole 415V 250mm, Shaft DIA 28mm TECA Aluminium Housing	£498.49
5.543TECAB35-IE2	5.5kw 3PH B35 4 Pole 415V 300mm, Shaft DIA 38mm TECA Aluminium Housing	£636.36
7.543TECAB35-IE2	7.5kw 3 PH B35 4 Pole 415V 300mm,Shaft DIA 38mm TECA Aluminium Housing	£722.10

PART NO	DESCRIPTION	LIST PRICE
11.043TECAB35-IE2	11kw 3PH B35 4 Pole 415V 350mm, Shaft 42mm DIA - D160L TECA Aluminium Housing	£1142.22

PART NO	DESCRIPTION	LIST PRICE
15.043TECAB35-IE2	15kw 3PH B35 4 Pole 415V 350mm, Shaft 42mm DIA - D180L TECA Aluminium Housing	£1285.15

PART NO	DESCRIPTION	LIST PRICE
18.543TECCB35-IE2	18.5kw 3PH B35 4 Pole 415V 350mm, Shaft 48mm DIA - D200L2 TCC Cast Iron Housing ECOL Motor Range	£1387.09

PART NO	DESCRIPTION	LIST PRICE
22.043TECCB35-IE2	22kw 3PH B35 4 Pole 415V 350mm, Shaft 48mm DIA - D200L2 TCC Cast Iron Housing ECOL Motor Range	£1774.18

PART NO	DESCRIPTION	LIST PRICE
30.043TECCB35-IE2	30kw 3PH B35 4 Pole 415V 400mm, Shaft 55mm DIA - D225M TCC Cast Iron Housing ECOL Motor Range	£2538.65

PART NO	DESCRIPTION	LIST PRICE
37.043TECCB35-IE2	37kw 3PH B35 4 Pole 415V 450mm, Shaft 60mm DIA - D250M TCC Cast Iron Housing ECOL Motor Range	£2635.76

PART NO	DESCRIPTION	LIST PRICE
45.043TECCB35-IE2	45kw 3PH B35 4 Pole 415V 450mm, Shaft 75mm DIA - D2805 TCC Cast Iron Housing ECOL Motor Range	£3367.86

PART NO	DESCRIPTION	LIST PRICE
55.043TECCB35-IE2	55kw 3PH B35 4 Pole 415V 450mm, Shaft 75mm DIA - D280M TCC Cast Iron Housing ECOL Motor Range	£3653.82

PART NO	DESCRIPTION	LIST PRICE
75.043TECCB35-IE2	75kw 3PH B35 4 Pole 415V 550mm, Shaft 80mm DIA - D3158 TCC Cast Iron Housing ECOL Motor Range	£4592.49

PART NO	DESCRIPTION	LIST PRICE
90.043TECCB35-IE2	90kw 3PH B35 4 Pole 415V 550mm, Shaft 80mm DIA - D315M TCC Cast Iron Housing ECOL Motor Range	£5939.66

PART NO	DESCRIPTION	LIST PRICE
110.043TECCB35-IE2	110kw 3PH B35 4 Pole 415V?? 550mm, Shaft 80mm DIA - D315L TCC Cast Iron Housing ECOL Motor Range	£10601.16

WIRING DIAGRAMS

OVERALL & INSTALLATION DIMENSIONS ALUMINIUM HOUSING

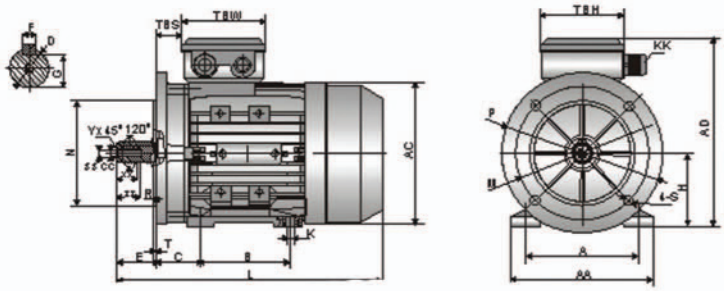

IMB35

B35 Overall & Installation Dimensions

FRAME	H	B35						B35R						A	B	C	D	E	F
		M	N	P	T	R	S	M	N	P	T	R	S						
56	56	Φ100	Φ80	Φ120	3.0	0	Φ7							90	71	36	Φ9	20	3
63	63	Φ115	Φ95	Φ140	3.0	0	Φ10							100	80	40	Φ11	23	4
71**	71	Φ130	Φ110	Φ160	3.5	0	Φ10	Φ115	Φ95	Φ140	3.5	0	Φ10	112	90	45	Φ14	30	5
80	80	Φ165	Φ130	Φ200	3.5	0	Φ12	Φ130	Φ110	Φ160	4.0	0	Φ10	125	100	50	Φ19	40	6
90S	90	Φ165	Φ130	Φ200	3.5	0	Φ12	Φ130	Φ110	Φ160	4.0	0	Φ10	140	100	56	Φ24	50	8
90L1/L2	90	Φ165	Φ130	Φ200	3.5	0	Φ12	Φ130	Φ110	Φ160	3.5	0	Φ10	140	125	56	Φ24	50	8
100**	100	Φ215	Φ180	Φ250	4.0	0	Φ15	Φ165	Φ130	Φ200	4.0	0	Φ12	160	140	63	Φ28	60	8
112	112	Φ215	Φ180	Φ250	4.0	0	Φ15	Φ165	Φ130	Φ200	4.0	0	Φ12	190	140	70	Φ28	60	8
132S	132	Φ265	Φ230	Φ300	4.0	0	Φ15	Φ215	Φ180	Φ250	4.0	0	Φ15	216	140	89	Φ38	80	10
132M/L	132	Φ265	Φ230	Φ300	4.0	0	Φ15	Φ215	Φ180	Φ250	4.0	0	Φ15	216	178	89	Φ38	80	10
160M/L	160	Φ300	Φ250	Φ350	5.0	0	Φ19							254	210/254	108	Φ42	110	12
180M/L	180/160	Φ300	Φ250	Φ350	5.0	0	Φ19							279	241/279	121	Φ48	110	14
200L	200	Φ350	Φ300	Φ400	5.0	0	Φ19							318	305	133	Φ55	110	16

FRAME	G	K	KK	AA	AD	AC	L	Lccu	TBS	TBW	TBH	SS	XX	ZZ	CC	Y
56	7.2	5.8x5.8	1-M16X1.5	110	156	Φ117	196	232	14	88	88	M3	9	12	2.5	0.5
63	8.5	7x10	1-M16X1.5	120	171	Φ130	220	258	14	94	94	M4	10	14	3.3	0.8
71**	11	7x10	1-M20X1.5	132	186	Φ147	241(255)	282(296)	20	94	94	M5	12	17	4.2	0.8
80	15.5	10x13	1-M20X1.5	160	213	Φ163	290	339	27	105	105	M6	16	21	5	1
90S	20	10x13	1-M20X1.5	175	229	Φ183	312	361	30	105	105	M8	19	25	6.8	1
90L1/L2	20	10x13	1-M20X1.5	175	229	Φ183	337/367	386/416	30	105	105	M8	19	25	6.8	1
100**	24	12x15	2-M20X1.5	198	252	Φ205	369(387)	425(443)	26	105	105	M10	22	30	8.5	1.5
112	24	12x15	2-M25X1.5	220	279	Φ229	395	463	32	112	112	M10	22	30	8.5	1.5
132S	33	12x15	2-M25X1.5	252	318	Φ265	437	497	38	112	112	M12	28	37	10.2	1.5
132M/L	33	12x15	2-M25X1.5	252	318	Φ265	475/501	535/561	38	112	112	M12	28	37	10.2	1.5
160M/L	37	15x19	2-M32X1.5	290	384	Φ325	640	697	64	143	143	M16	36	45	14.2	2
180M/L	42.5	15x25	2-M32X1.5	340	440	Φ368	730		73	190	190	M16	36	45	14.2	2
200L	49	19x29	2-M40X1.5	390	460	Φ368	745		85	190	190	M20	42	53	17.5	2

TECA SERIES IE1 EFFICIENCY MOTORS TECHNICAL DATA (AT 50HZ) ALUMINIUM HOUSING

Model	Power (KW)	Current (A)			Current (A)			Current (A)			Speed (r/min)	Eff. (%)	Power Factor	Tstart/Tn (Times)	Tmax/Tn (Times)	Tmin/Tn (Times)	Is/In (Times)	Noise dB(A)	Wt. (Kg)
		220V	380V	660V	230V	400V	690V	240V	415V	720V									
TECA712-4	0.37	2.02	1.17	0.67	1.92	1.11	0.64	1.85	1.07	0.62	1370	65	0.74	2.2	2.4	1.7	6	55	5.80
TECA713-4	0.55	2.92	1.69	0.97	2.78	1.60	0.93	2.67	1.55	0.89	1380	66	0.75	2.2	2.4	1.7	6	57	6.50
TECA801-4	0.55	2.87	1.66	0.96	2.74	1.58	0.91	2.63	1.52	0.88	1370	67	0.75	2.2	2.4	1.7	6	58	8.10
TECA802-4	0.75	3.50	2.03	1.17	3.34	1.93	1.11	3.21	1.86	1.07	1380	72	0.78	2.2	2.4	1.6	6	58	9.10
TECA803-4	1.1	4.86	2.81	1.62	4.63	2.67	1.54	4.45	2.57	1.48	1390	76.2	0.78	2.2	2.4	1.6	6	60	11.00
TECA90S-4	1.1	4.80	2.78	1.60	4.57	2.64	1.52	4.40	2.54	1.47	1400	76.2	0.79	2.2	2.4	1.6	6	61	11.70
TECA90L1-4	1.5	6.27	3.63	2.09	5.97	3.45	1.99	5.75	3.32	1.92	1400	78.5	0.8	2.2	2.4	1.6	6	61	14.40
TECA90L2-4	2.2	8.91	5.16	2.97	8.45	4.90	2.83	8.17	4.72	2.72	1400	81	0.8	2.2	2.4	1.5	7	63	17.60
TECA100L1-4	2.2	8.80	5.09	2.93	8.38	4.84	2.79	8.07	4.66	2.69	1420	81	0.81	2.2	2.3	1.5	7	64	19.20
TECA100L2-4	3	11.8	6.81	3.92	11.2	6.47	3.74	10.8	6.24	3.60	1420	82.6	0.81	2.2	2.3	1.5	7	64	22.50
TECA100L3-4	4	15.2	8.80	5.07	14.2	8.36	4.83	13.9	8.06	4.65	1430	84.2	0.82	2.2	2.3	1.5	7	65	27.30
TECA112M-4	4	15.0	8.70	5.01	14.3	8.26	4.77	13.8	7.96	4.59	1430	84.2	0.83	2.2	2.2	1.5	7	65	29.00
TECA112L-4	5.5	20.3	11.7	6.76	19.3	11.2	6.44	18.6	10.8	6.20	1440	85.7	0.83	2.2	2.2	1.4	7	68	35.70
TECA132S-4	5.5	20.1	11.6	6.68	19.1	11.0	6.37	18.4	10.6	6.13	1450	85.7	0.84	2.2	2.2	1.4	7	71	39.00
TECA132M-4	7.5	26.6	15.4	8.87	25.4	14.6	8.45	24.4	14.1	8.13	1450	87	0.85	2.2	2.2	1.4	7	71	48.60
TECA132L1-4	9.2	32.5	18.8	10.8	30.9	17.9	10.3	29.8	17.2	9.9	1460	87.5	0.85	2.2	2.2	1.4	7.5	74	56.50
TECA132L2-4	11	38.0	22.0	12.7	36.2	20.9	12.1	34.8	20.1	11.6	1460	88.4	0.86	2.2	2.2	1.4	7.5	74	64.00
TECA160M-4	11	37.5	21.7	12.5	35.8	20.6	11.9	34.4	19.9	11.5	1460	88.4	0.87	2.2	2.2	1.4	7	75	73.00
TECA160L1-4	15	51.2	29.6	17.1	48.8	28.2	16.3	46.9	27.1	15.6	1460	88.4	0.87	2.2	2.2	1.4	7.5	75	88.50

OVERALL & INSTALLATION DIMENSIONS CAST IRON HOUSING

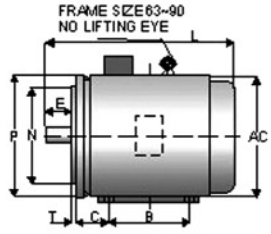

FRAME SIZE 63~132

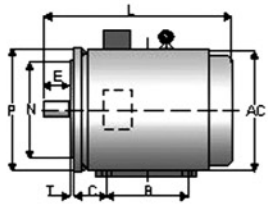

FRAME SIZE 160~355

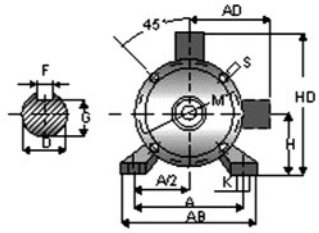

FRAME SIZE 63~200

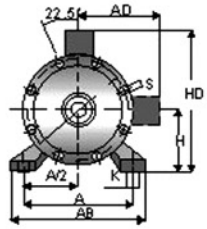

FRAME SIZE 225~355

Frame No.	Poles	Mounting Dimensions & Tolerance																			Frame Dimensions				
		A	A/2	B	C	D	E	F	G[1]	H	K[2]	M	N	P[3]	R[4]	S	T	Holes No.	AB	AC	AD	HD	L
80M	2,4,6,8	125	63	100	50	19 +0.009 -0.004	40 ±0.310	6 0 -0.036	16 0 -0.20	80 0 -0.5	10 +0.430 0	165	130	+0.014 -0.011	200	0 ±2.0	12 +0.43 0	3.5 0 -0.12	4	165	175	145	220	295
90S		140	70	100	56	24	50	8	20	90	12									180	195	155	250	320
90L				125																				345
100L		160	80	140	63	28	60 ±0.370		24	100		215	180		250		15	4		205	215	180	270	385
112M		190	95	140	70	±2.0				112										230	240	190	300	400
132S		216	108	140	89	38	80	10	33	132		265	230		300					270	275	210	345	470
132M				178																				510
160M		254	127	210	108	42 +0.018 +0.002	110 ±0.430	12 0 -0.043	37	160	15 +0.520 0	300	250	+0.016 -0.013	350	±3.0	19	5		320	330	255	420	615
160L				254		±3.0																		670
180M		279	140	241	121	48		14	43	180										355	380	280	455	700
180L				279																				740
200L		318	159	305	133	55		16	49	200		350	300	±0.016	400					395	420	305	505	770
225S	4,8	355	178	286	149	60	140 ±0.500	18	53	225	19	400	350	±0.018	450	0 ±4.0		8		435	470	335	560	815
225M	2			311		55	110 ±0.430	16	53															820
	4,6,8					60	140 ±0.500	18	49															845
250M	2	406	203	349	168					250	+0.520 0									490	510	370	615	910
	4,6,8					65			58															
280S	2	457	229	368	190	75		20 0 -0.052	68	280	24	500	450	±0.020	560		19			550	580	410	680	985
	4,6,8					+0.030 +0.011																		
280M	2			419		65		18 0 -0.043	58															1035
	4,6,8,10					75		20 0 -0.052	68							+0.52 0								
315S	2	508	254	406	216	65		18 0 -0.043	58	315	28	600	550	±0.022	660		24	6 0 -0.15		635	645	530	845	1185
	4,6,8,10					80	170 ±0.500	22 0 -0.052	71															1215
315M	2			457		65	140	18 0 -0.043	58															1295
	4,6,8,10					80	170	22 0 -0.052	71															1325
315L	2			508		65	140	18 0 -0.043	58															1295
	4,6,8,10					80	170	22	71															1325
355M	2	610	305	560	254	75	140	20 0 -0.052	68	355		740	680	±0.025	800					730	710	655	1010	1500
	4,6,8,10					100 +0.035 +0.013	210	28	90															1570
355L	2			630		75 +0.030 +0.011	140	20	68															1500
	4,6,8,10					100 +0.035 +0.013	210	28	90															1570

50% OFF ALL PRICES

IE1 EFFICIENCY MOTORS TECHNICAL DATA CAST IRON HOUSING

Model	Rated output (KW)	At full load				Locked current	Locked torque	Max torque	Net weight (kg)	Noise level dB(A)	
		Speed (r/min)	Current (A)	Eff. (%)	Power factor (cosΦ)	Rated current	Rated torque	Rated torque		I	II
180M	18.5	1470	34.3	90.5	0.86	7.5	2.2		182	76	80
180L	22		40.6	91					190		
200L	30		54.7	92		7.2			270	79	83
225S	37	1480	66.4	92.5	0.87				284	81	85
225M	45		80.5	92.8					320		84
250M	55		98.1	93					427	83	86
280S	75		132.7	93.8					562	86	89
280M	90		158.5	94.2					667		
315S	110	1490	191.0	94.5	0.88	6.9	2.1	2.2	1000	93	96
315M	132		228.4	94.8					1100		
315L1	160		273.4	94.9	0.89				1160	97	100
315L2	200		334.4	95					1270		
355M	250		420.7	95.3	0.90				1700	101	104
355L	315		528.4	95.6					1850		

RETURN FILTERS

FA-1 RETURN LINE SPIN-ON 637
FA-2 TANK TOP RETURN LINE SPIN-ON 643
FCR-7 TANK TOP RETURN LINE 648
FVR-7 IN TANK RETURN LINE 658
FR-1 TANK TOP RETURN LINE 665
FR-8 TANK TOP RETURN LINE 674
FA-4 INLINE PRESSURE AND RETURN SPIN ON 681

FLOWFIT®

50% OFF ALL PRICES

FILTRAZIONE IDRAULICA
HYDRAULIC FILTRATION

FILTREC®
Technical Filtration

serie
FA-1
RETURN

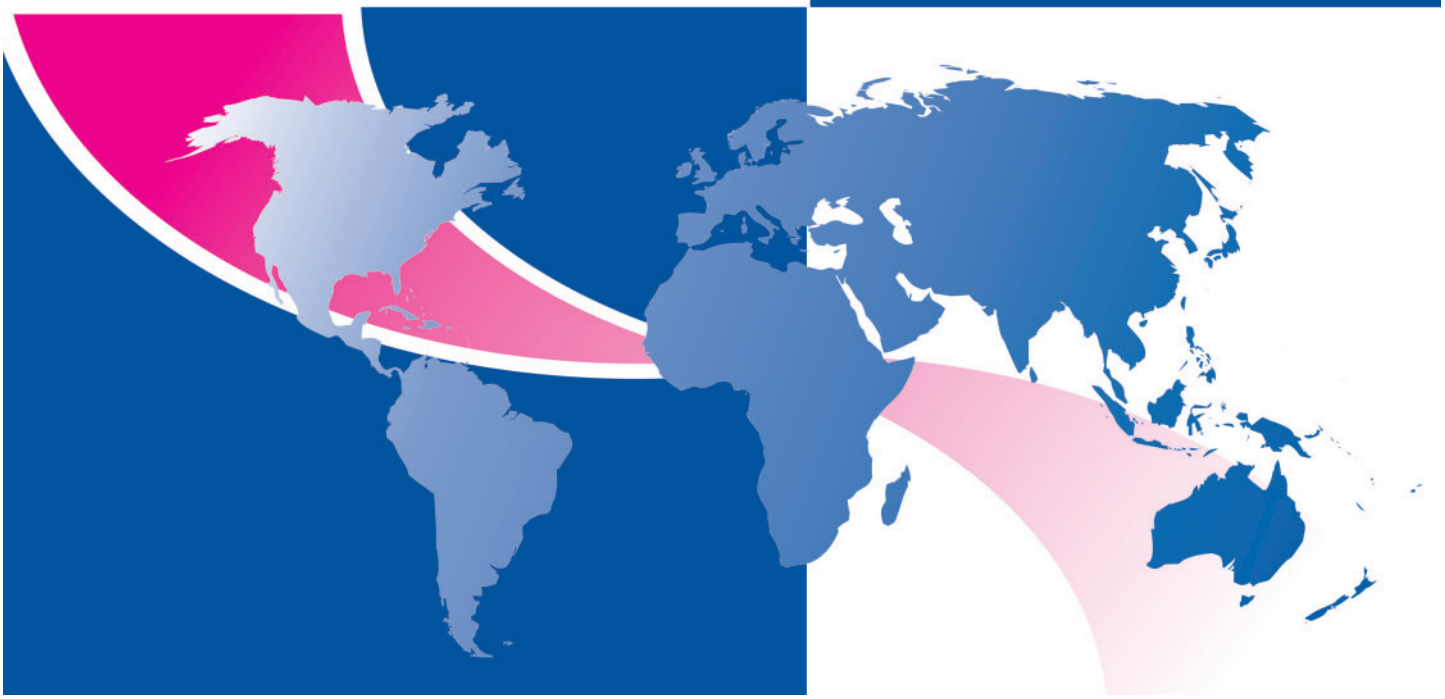

Serie FA-1

Filtri avvitabili
Spin-on filter

FILTER HOUSING

Technical Information

Description:	*In line low-pressure spin-on filter assemblies, suction and return lines.*
Max flow rate:	*300 l/min (79 gpm)*
Max working pressure:	*As per NFPA T 3.10.17: 12 Bar (175 psi)*
Test pressure:	*As per NFPA T 3.10.17: 15 Bar (217.5 psi)*
Burst pressure:	*As per NFPA T 3.10.17: 20 Bar (290 psi)*
Connection Ports:	*BSP*
By-pass setting:	*suction line 0,25 Bar (3.6 psi) return line 1,7 Bar (24.6 psi)*
Indicator:	*Visual and electrical*
Working temperature:	*-25°C +120°C (-13°F +248°F)*
Materials:	• *Head: aluminium* • *Housing: carbon steel* • *Seal: Buna-N*
Fluids compatibility:	*ISO 2943: Filter assembly compatible with mineral oils and some synthetic or vegetable oils. With other fluid applications please contact Filtrec S.p.A.*

FILTER ELEMENT

Filter media:	*Microglass fiber 3,6,10,25 µm* *Cellulose 10,25 µm* *Wire mesh 60, 125 µm*
Collapse pressure:	*as per ISO 2941: 4 Bar (58 psi)*

DESCRIPTION	ORDER CODE	PORTS	FLOW RATE	PRICE	ELEMENT	PRICE
SUPPLIED WITH VACUUM GAUGE INDICATOR AND BYPASS VALVE						
10 MICRON CELLULOSE						
FA-1-10-C10-B4-R-R1	ZZ004770	3/4" BSP	70 L/MIN	£38.16	A110C10	£15.90
FA-1-11-C10-B4-R-R1	ZZ004771	3/4" BSP	75 L/MIN	£64.66	A111C10	£27.56
FA-1-20-C10-B6-R-R1	ZZ004772	1 1/4" BSP	130 L/MIN	£79.50	A120C10	£23.32
FA-1-21-C10-B6-R-R1	ZZ004773	1 1/4" BSP	150 L/MIN	£82.68	A121C10	£40.28
FA-1-30-C10-B7-R-R1 * 2 ELEMENTS	ZZ004774	1 1/2" BSP	300 L/MIN	£104.94	A120C10	£23.32
FA-1-31-C10-B7-R-R1 * 2 ELEMENTS	ZZ004775	1 1/2" BSP	310 L/MIN	£127.20	A121C10	£40.28
FA-1-40-C10-B7-R-R1 * 2 ELEMENTS	ZZ004776	1 1/2" BSP	300 L/MIN	£243.80	A120C10	£23.32
25 MICRON CELLULOSE						
FA-1-10-C25-B4-R-R1	ZZ004777	3/4" BSP	75 L/MIN	£38.16	A110C25	£15.90
FA-1-11-C25-B4-R-R1	ZZ004778	3/4" BSP	80 L/MIN	£64.66	A111C25	£27.56
FA-1-20-C25-B6-R-R1	ZZ004779	1 1/4" BSP	170 L/MIN	£79.50	A120C25	£23.32
FA-1-21-C25-B6-R-R1	ZZ004780	1 1/4" BSP	190 L/MIN	£82.68	A121C25	£40.28
FA-1-30-C25-B7-R-R1 * 2 ELEMENTS	ZZ004781	1 1/2" BSP	320 L/MIN	£104.94	A120C25	£23.32
FA-1-31-C25-B7-R-R1 * 2 ELEMENTS	ZZ004782	1 1/2" BSP	340 L/MIN	£127.20	A121C25	£40.28
FA-1-40-C25-B7-R-R1 * 2 ELEMENTS	ZZ004783	1 1/2" BSP	320 L/MIN	£243.80	A120C25	£23.32

THE GIVEN FLOW RATE VALUES REFER TO APPLICATIONS WITH MINERAL OIL HAVING VISCOSITY OF 30 CST AT WORKING TEMPERATURE. FOR APPLICATIONS WITH DIFFERENT FLUID OR WORKING CONDITIONS, A CORRECTIVE FACTOR MUST BE APPLIED BY REFERING TO THE TECHNICAL INFORMATION.

OPTIONAL EXTRAS

INDICATORS	PRICE
R2 PRESSURE SWITCH 1.3 BAR SETTING O.C (18.85 PSI)	£27.98
R3 PRESSURE SWITCH 1.3 BAR SETTING C.C (18.85 PSI)	£27.56
R4 PRESSURE SWITCH 1.3 BAR SETTING (18.85 PSI)	£100.74
R6 VISUAL PRESSURE 1.2 BAR SETTING (17.4 PSI)	£34.60
R7 PRESSURE/VACUUM GAUGE -1+5 BAR SETTING (-14.5+72.5PSI)	£9.67
Z1 DIFFERENTIAL VISUAL SWITCH 1.3 BAR SETTING (18.85 PSI) - FA-1-30/31 ONLY	£47.32
Z2 DIFFERENTIAL ELECTRIC VISUAL SWITCH 1.3 BAR SETTING (18.85 PSI) - FA-1-30/31 ONLY	£65.13
Z15 DIFFERENTIAL VISUAL SWITCH 1.3 BAR SETTING (18.85 PSI) - FA-1-40/41 ONLY	£47.32
Z16 DIFFERENTIAL ELECTRIC VISUAL SWITCH 1.3 BAR SETTING (18.85 PSI) - FA-1-40/41 ONLY	£65.13
Z20 DIFFERENTIAL VISUAL SWITCH 1.3 BAR SETTING (18.85 PSI) - FA-1-20/21 ONLY	£26.46
Z21 DIFFERENTIAL ELECTRIC SWITCH 1.3 BAR SETTING (18.85 PSI) - FA-1-20/21 ONLY	£21.88

50% OFF ALL PRICES

Informazioni dimensionali - *Overall dimensions*

FA-1-10/11

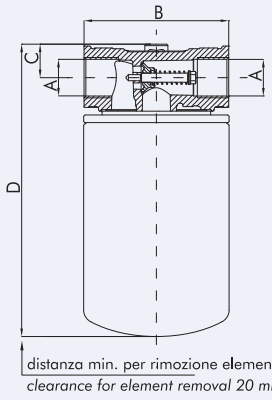

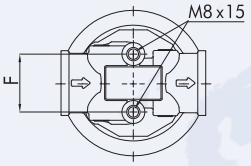

FA-1-20/21

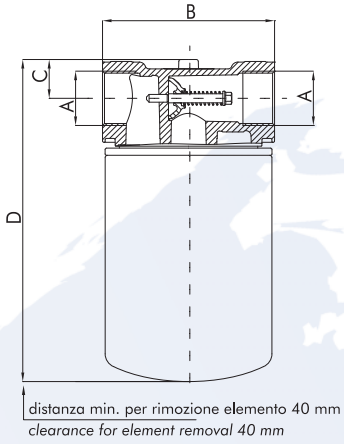

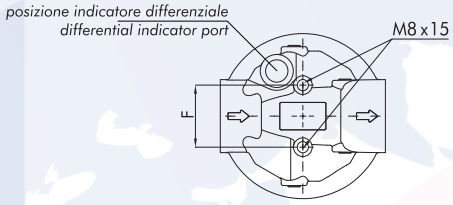

Solo su richiesta (Contattate il nostro ufficio commerciale) - ***Only on request*** *(Please contact our sales department)*

Connessioni IN/OUT IN/OUT Connection	Connessione cartuccia *Filter element connection*	Fori di fissaggio *Mounting holes*
1" BSP	3/4"BSP	M8
3/4" NPT	1"-12 UNF	1/4"-20 UNC
1" NPT		
1"1/16-12 UNF		

Connessioni IN/OUT IN/OUT Connection	Connessione cartuccia *Filter element connection*	Fori di fissaggio *Mounting holes*
1"1/4 NPT	1"1/4 BSP 1"1/2-16 UNF	5/16"-18-UNC-2B
1"5/8-12-UNF		

FA-1-30/31

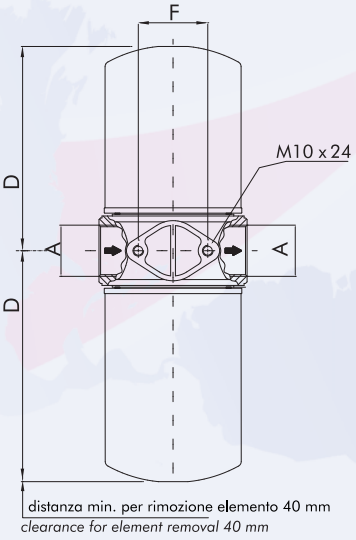

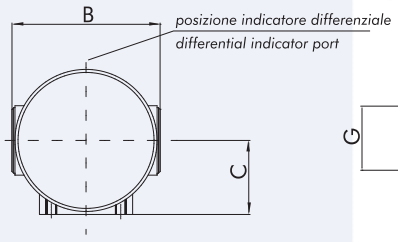

FA-1-40/41

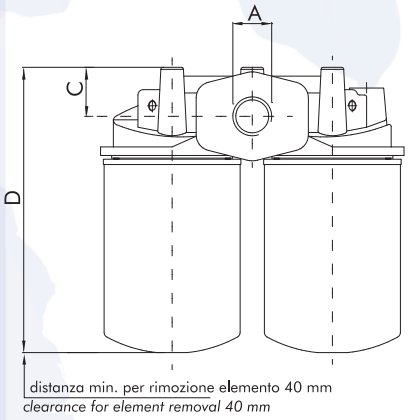

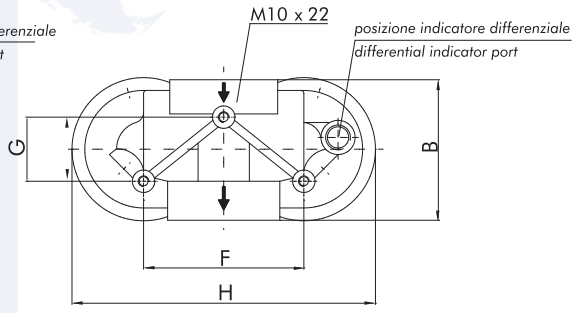

1) Grandezza nominale - *Nominal size*

Codice - *Code*	A	B	C	D	F	G	H	Cart. ricambio *Element*
FA-1-10	3/4" BSP	95	22	192	38	----	----	A-1-10
FA-1-11		95	22	257	38	----	----	A-1-11
FA-1-20	1 1/4" BSP	133	30	249	50	----	----	A-1-20
FA-1-21		133	30	295	50	----	----	A-1-21
FA-1-30	1 1/2" BSP	140	70	218	65	----	----	A-1-20
FA-1-31		140	70	262	65	----	----	A-1-21
FA-1-40	1 1/2" BSP	132	46	267	150	60	284	A-1-20
FA-1-41	1 1/2" SAE J518-3000	132	46	313	150	60	284	A-1-21

2) Dimensioni cartucce - *Element size*

Codice - *Code*	A	B	C
A-1-10	96	3/4" BSP	148
A-1-11	96	3/4" BSP	213
A-1-20	128	1 1/4" BSP	182
A-1-21	128	1 1/4" BSP	228

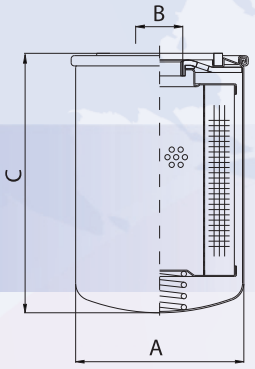

3) Grado di filtrazione - *Filtration ratings*

Codice - *Code*	Materiale - *Media*	Efficienza - *Efficiency*
0	senza cartuccia / *no element*	------
G03	microfibra inorganica / *microglass fiber*	$\beta_{4,5\ \mu M\ (C)} \geq 1000$
G06	microfibra inorganica / *microglass fiber*	$\beta_{7\ \mu M\ (C)} \geq 1000$
G10	microfibra inorganica / *microglass fiber*	$\beta_{12\ \mu M\ (C)} \geq 1000$
G25	microfibra inorganica / *microglass fiber*	$\beta_{27\ \mu M\ (C)} \geq 1000$
C10	carta trattata / *resin impregnated cellulose*	$\beta_{10\ \mu M\ (C)} \geq 2$
C25	carta trattata / *resin impregnated cellulose*	$\beta_{25\ \mu M\ (C)} \geq 2$
T60	tela metallica / *wire mesh*	------
T125	tela metallica / *wire mesh*	------

4) Connessioni - *Connection port*

Codice - *Code*	Connessione - *Connection*
B4	3/4" BSP
B6	1 1/4" BSP
B7	1 1/2" BSP
F7M	1 1/2" SAE J518 - 3000 - M 12

5) Valvola di by-pass - *By-pass valve*

Codice - *Code*	Taratura - *Setting*
0	senza / *without*
S	aspirazione / *suction* (0,25 Bar - *3,6 psi*)
R	ritorno o in linea / *return or in-line* (1,7 Bar - *24,6 psi*)

50% OFF ALL PRICES

6) Indicatori - *Indicator*

Codice - *Code*	Tipo indicatore - *Indicator type*	Applicazione - *Application*
0	senza *without*	
S1	vuotometro scala 0÷-1 Bar *vacuum gauge indicator scale 0÷-1 Bar (14,5 Psi)*	in aspirazione *suction line*
S2	vuotostato n.a. taratura -0,2 Bar *vacuum switch -0,2 Bar setting O.C. (-2,9 Psi)*	
S3	vuotostato n.c. taratura -0,2 Bar *vacuum switch 0,2 Bar setting C.C. (-2,9 Psi)*	
S4	vuotostato visivo taratura -0,3 Bar *vacuum switch view -0,3 Bar setting (-4,35 Psi)*	
R1	manometro scala 0÷10 Bar *pressure gauge indicator scale 0÷10 Bar setting (0÷145 Psi)*	al ritorno *return line*
R2	pressostato n.a. taratura 1,3 Bar *pressure switch 1,3 Bar setting O.C. (18,85 Psi)*	
R3	pressostato n.c. taratura 1,3 Bar *pressure switch 1,3 Bar setting C.C. (18,85 Psi)*	
R4	pressostato taratura 1,3 Bar *pressure switch 1,3 Bar setting (18,85 Psi)*	
R6	pressostato visivo taratura 1,2 Bar *visual pressure 1,2 Bar setting (17,4 Psi)*	
R7	mano vuotometro taratura -1÷5 Bar *pressure/vacuum gauge -1÷5 Bar setting (-14,5÷72,5 Psi)*	
Z1	differenziale visivo taratura 1,3 Bar *differential visual switch 1,3 Bar setting (18,85 Psi)*	al ritorno solo per filtri FA-1-30/31 *return line only for FA-1-30/31*
Z2	differenziale visivo elettrico taratura 1,3 Bar *differential electric visual switch 1,3 Bar setting (18,85 Psi)*	al ritorno solo per filtri FA-1-30/31 *return line only for FA-1-30/31*
Z15	differenziale visivo taratura 1,3 Bar *differential visual switch 1,3 Bar setting (18,85 Psi)*	al ritorno solo per filtri FA-1-40/41 *return line only for FA-1-40/41*
Z16	differenziale visivo elettrico taratura 1,3 Bar *differential electric visual switch 1,3 Bar setting (18,85 Psi)*	al ritorno solo per filtri FA-1-40/41 *return line only for FA-1-40/41*
Z20	differenziale visivo taratura 1,3 Bar *differential visual switch 1,3 Bar setting (18,85 Psi)*	al ritorno solo per filtri FA-1-20/21 *return line only for FA-1-20/21*
Z21	differenziale elettrico taratura 1,3 Bar *differential electric switch 1,3 Bar setting (18,85 Psi)*	al ritorno solo per filtri FA-1-20/21 *return line only for FA-1-20/21*

Codici per l'ordinazione - *Ordering information*

Filtro completo *Filter assembly* — **FA-1**

31	C10	B7	R	R2
1*	3*	4*	5*	6*

Cartuccia *Filter element* — **A-1**

21	C10
1*	3*

Curve di portata - *Pressure drop charts*

Filtro *Housing*

Le curve (secondo ISO 3968 classe B) sono ottenute con olio minerale avente viscosità di 30 cSt e densità di 0,86 Kg/dm³. Per viscosità e densità diverse i dati variano.

Pressure drop charts (as per ISO 3968 class B) are obtained using mineral oil with 30 cSt viscosity and 0,86 Kg/dm³ density. With different values of viscosity and density data may vary.

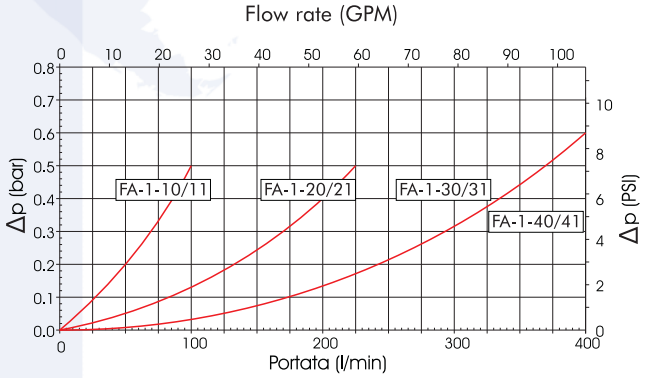

A-1-10-..

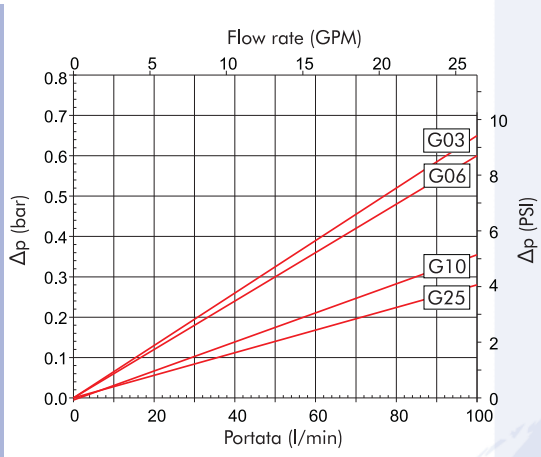

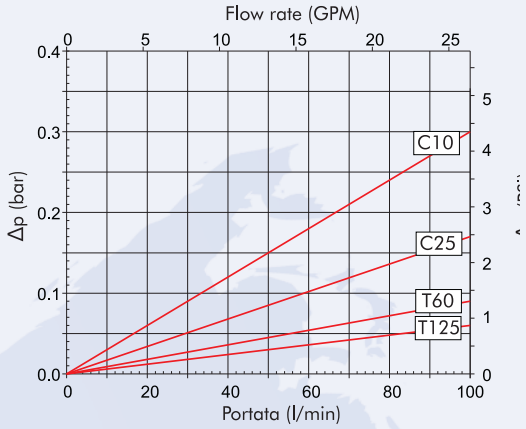

A-1-11-..

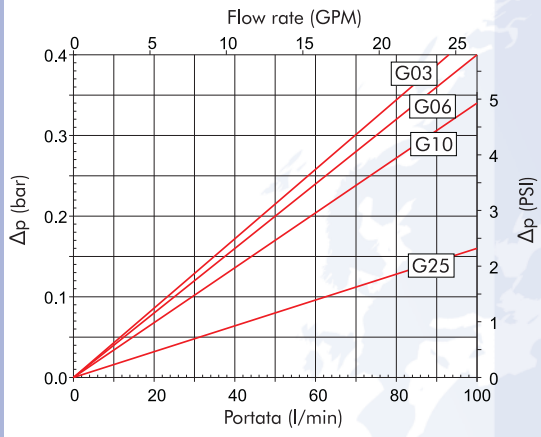

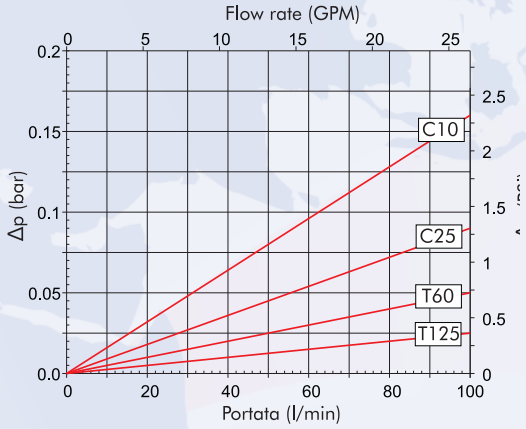

A-1-20-..

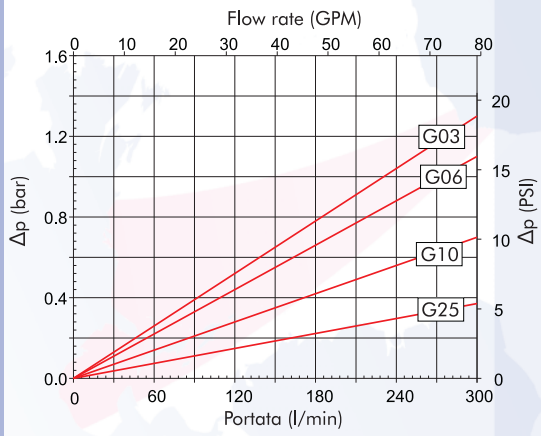

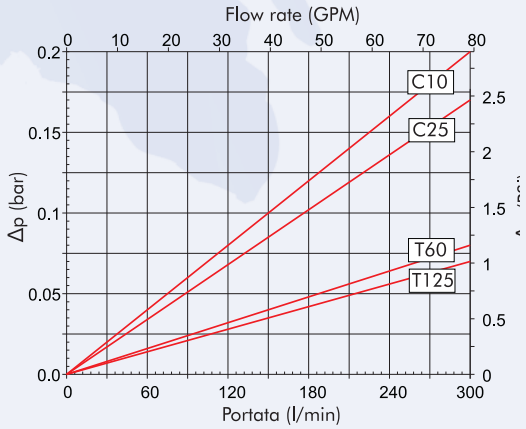

A-1-21-..

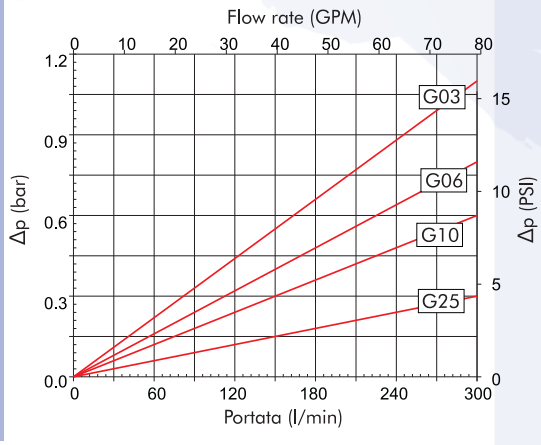

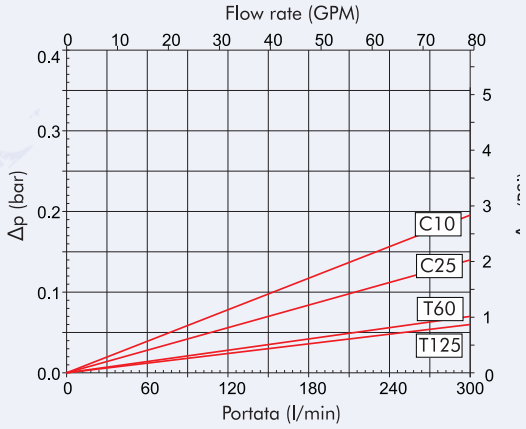

50% OFF ALL PRICES

FILTRAZIONE IDRAULICA
HYDRAULIC FILTRATION

FILTREC®
Technical Filtration

serie
FA-2

Serie FA-2

Filtri avvitabili da montare su serbatoio
Tank top return spin-on filters

FILTER HOUSING

Technical Information

Description:	*Tank top return line spin-on filter assemblies.*
Max flow rate:	*150 l/min (40 gpm)*
Max working pressure:	*As per NFPA T 3.10.17: 12 Bar (175 psi)*
Test pressure:	*As per NFPA T 3.10.17: 15 Bar (217.5 psi)*
Burst pressure:	*As per NFPA T 3.10.17: 20 Bar (290 psi)*
Connection Ports:	*BSP*
Indicator:	*Visual and electrical*
Working temperature:	*-25°C +100°C (-13°F +212°F)*
Materials:	*• Head: aluminium* *• Housing: carbon steel* *• Seal: Buna-N*
Fluids compatibility:	*ISO 2943: Filter assembly compatible with mineral oils and some synthetic or vegetable oils. With other fluid applications please contact Filtrec S.p.A.*

FILTER ELEMENT

Filter media:	*Microglass fiber 3,6,10,25 µm* *Cellulose 10,25 µm* *Wire mesh 60, 125 µm*
Collapse pressure:	*As per ISO 2941: 4 Bar (58 psi)*
By-pass setting:	*Return line 1,7 Bar (24.6 psi)*

DESCRIPTION	ORDER CODE	PORTS	FLOW RATE	PRICE	ELEMENT	PRICE
10 MICRON CELLULOSE						
FA-2-10-C10-BM-B4-R1	ZZ004784	3/4" BSP	60 L/MIN	£86.54	A210C10BM	£26.49
FA-2-11-C10-BM-B4-R1	ZZ004785	3/4" BSP	75 L/MIN	£86.54	A211C10BM	£30.92
FA-2-20-C10-BM-B4-R1	ZZ004786	1 1/2" BSP	140 L/MIN	£118.72	A220C10BM	£37.30
FA-2-21-C10-BM-B4-R1	ZZ004787	1 1/2" BSP	160 L/MIN	£120.84	A221C10BM	£47.25
25 MICRON CELLULOSE						
FA-2-10-C25-BM-B4-R1	ZZ004788	3/4" BSP	80 L/MIN	£86.54	A210C25BM	£26.49
FA-2-11-C25-BM-B4-R1	ZZ004789	3/4" BSP	90 L/MIN	£86.54	A211C25BM	£30.92
FA-2-20-C25-BM-B4-R1	ZZ004790	1 1/2" BSP	170 L/MIN	£118.72	A220C25BM	£37.30
FA-2-21-C25-BM-B4-R1	ZZ004791	1 1/2" BSP	200 L/MIN	£120.84	A221C25BM	£47.25
10 MICRON FIBREGLASS						
FA-2-10-G10-BM-B4-R1	ZZ004792	3/4" BSP	50 L/MIN	£113.17	A210G10BM	£44.52
FA-2-11-G10-BM-B4-R1	ZZ004793	3/4" BSP	60 L/MIN	£135.46	A211G10BM	£61.48
FA-2-20-G10-BM-B4-R1	ZZ004794	1 1/2" BSP	120 L/MIN	£176.67	A220G10BM	£81.26
FA-2-21-G10-BM-B4-R1	ZZ004795	1 1/2" BSP	130 L/MIN	£205.28	A221G10BM	£103.02

THE GIVEN FLOW RATE VALUES REFER TO APPLICATIONS WITH MINERAL OIL HAVING VISCOSITY OF 30 CST AT WORKING TEMPERATURE. FOR APPLICATIONS WITH DIFFERENT FLUID OR WORKING CONDITIONS, A CORRECTIVE FACTOR MUST BE APPLIED BY REFERING TO THE TECHNICAL INFORMATION.

OPTIONAL EXTRAS

INDICATORS	PRICE
R2 PRESSURE SWITH O.C 1.3 BAR 18.85 PSI	£27.98
R3 PRESSURE SWITCH C.C 1.3 BAR 18.85 C.C	£27.56
R7 PRESSURE VACUUM GAUGE -1+5 -14.5+72.5 PSI	£9.67

50% OFF ALL PRICES

Informazioni dimensionali - *Overall dimensions*

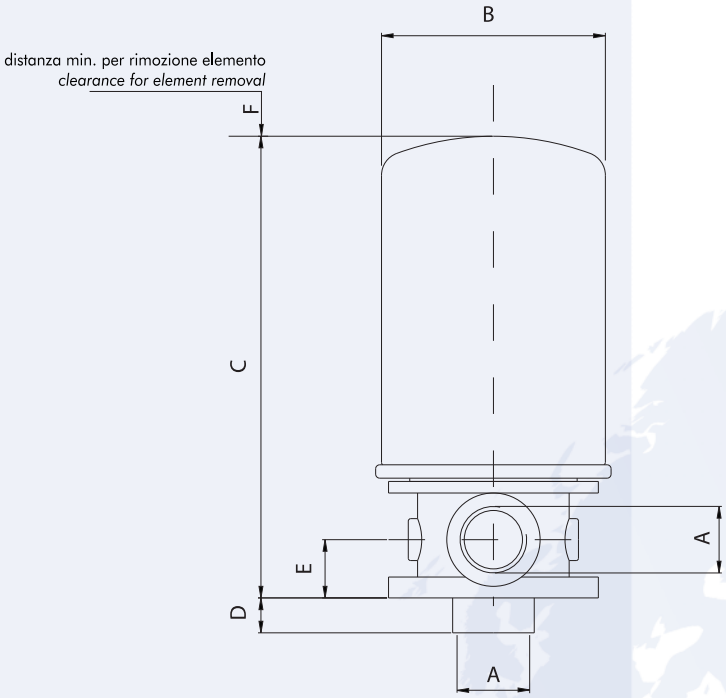

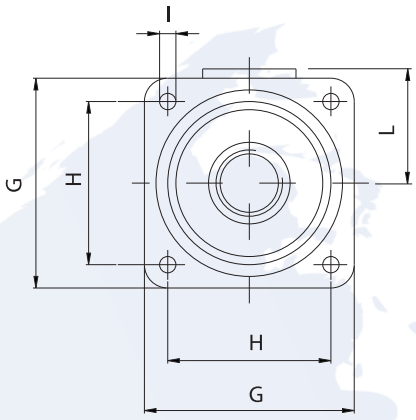

1) Grandezza nominale - *Nominal size*

Codice - *Code*	A	B	C	D	E	F	G	H	I	L	Cart. ricambio *Element*
FA-2-10	3/4" BSP	96	200	15	25	20	90	70	7	50	A-2-10
FA-2-11		96	265	15	25	20	90	70	7	50	A-2-11
FA-2-20	1 1/2" BSP	128	255	20	36	40	122	100	9	70	A-2-20
FA-2-21		128	300	20	36	40	122	100	9	70	A-2-21

2) Dimensioni cartucce - *Element size*

Codice - *Code*	A	B	C
A-2-10	96	3/4" BSP	148
A-2-11	96	3/4" BSP	213
A-2-20	128	1 1/4" BSP	182
A-2-21	128	1 1/4" BSP	228

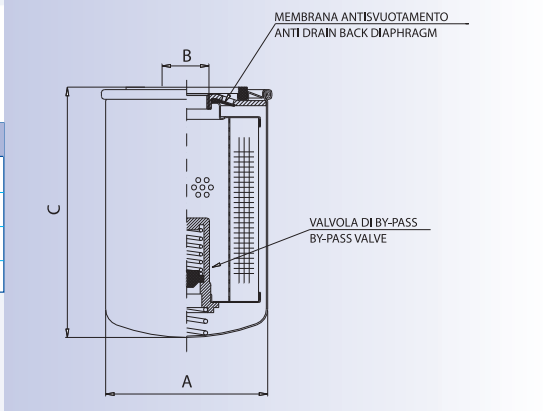

3) Grado di filtrazione - *Filtration ratings*

Codice - *Code*	Materiale - *Media*	Efficienza - *Efficiency*
0	senza cartuccia / *no element*	------
G03	microfibra inorganica / *microglass fiber*	$\beta_{4,5\ \mu M\ (C)} \geq 1000$
G06	microfibra inorganica / *microglass fiber*	$\beta_{7\ \mu M\ (C)} \geq 1000$
G10	microfibra inorganica / *microglass fiber*	$\beta_{12\ \mu M\ (C)} \geq 1000$
G25	microfibra inorganica / *microglass fiber*	$\beta_{27\ \mu M\ (C)} \geq 1000$
C10	carta trattata / *resin impregnated cellulose*	$\beta_{10\ \mu M\ (C)} \geq 2$
C25	carta trattata / *resin impregnated cellulose*	$\beta_{25\ \mu M\ (C)} \geq 2$
T60	tela metallica / *wire mesh*	------
T125	tela metallica / *wire mesh*	------

4) Connessioni - *Connection port*

Codice - *Code*	Connessione - *Connection*
B4	3/4" BSP
B7	1 1/2" BSP

5) Indicatori - *Indicators*

Codice - *Code*	Tipo indicatore - *Indicator type*	Taratura - *Setting*
0	senza / *without*	
R1	manometro scala *pressure gauge indicator scale*	0÷10 Bar *0÷145 psi*
R2	pressostato n.a. taratura *pressure switch O.C.*	1,3 Bar *8,85 psi O.C.*
R3	pressostato n.c. taratura *pressure switch C.C.*	1,3 Bar *18,85 psi C.C.*
R7	manovuotometro taratura *pressure vacuum gauge*	-1÷5 Bar *-14,5÷72,5 Psi*

Codici per l'ordinazione - *Ordering information*

Filtro completo
Filter assembly

FA-2

21	C10	BM	B7	R2
1*	3*		4*	5*

Cartuccia
Filter element

A-2

20	C10	BM
2*	3*	

Curve di portata - *Pressure drop charts*

Filtro *Housing*

Le curve (secondo ISO 3968 classe B) sono ottenute con olio minerale avente viscosità di 30 cSt e densità di 0,86 Kg/dm³. Per viscosità e densità diverse i dati variano.

Pressure drop charts (as per ISO 3968 class B) are obtained using mineral oil with 30 cSt viscosity and 0,86 Kg/dm³ density. With different values of viscosity and density data may vary.

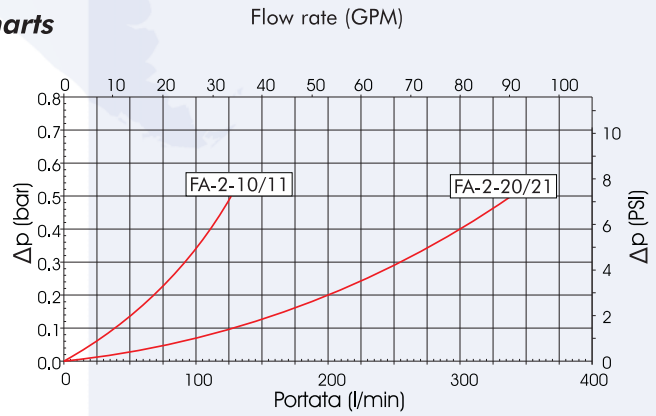

50% OFF ALL PRICES

A-2-10-..-BM

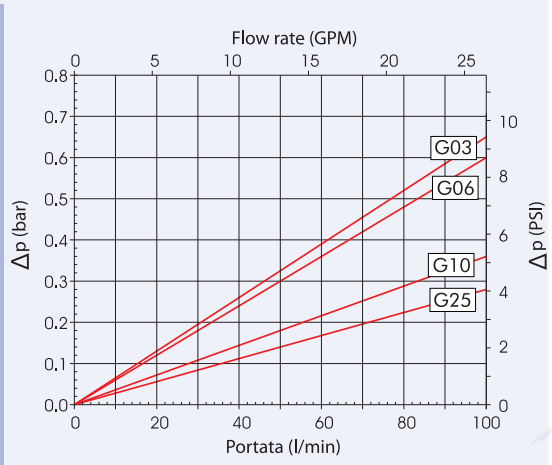

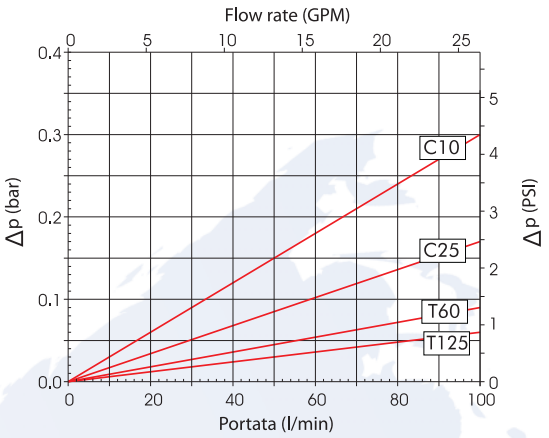

A-2-11-..-BM

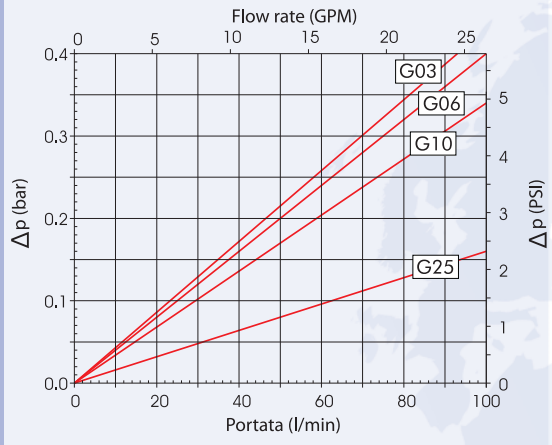

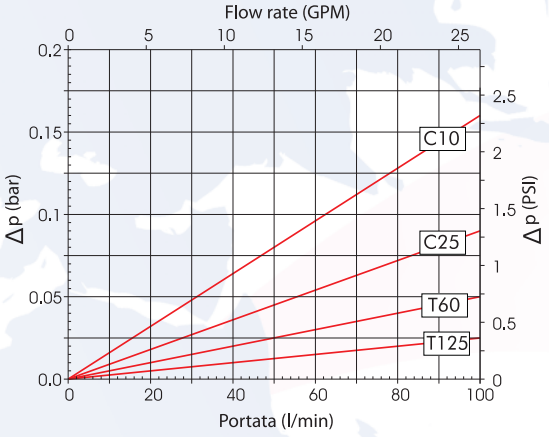

A-2-20-..-BM

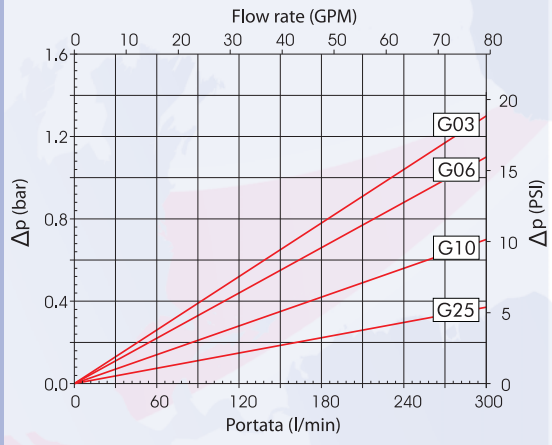

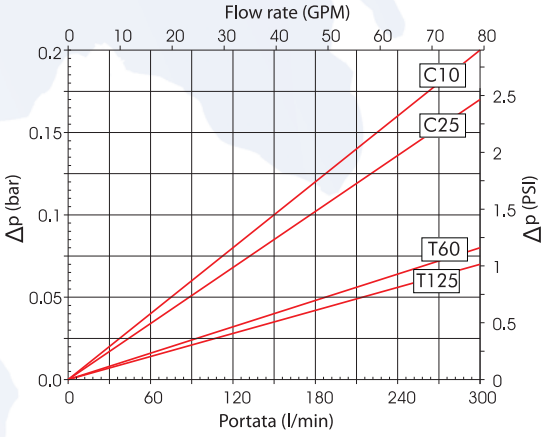

A-2-21-..-BM

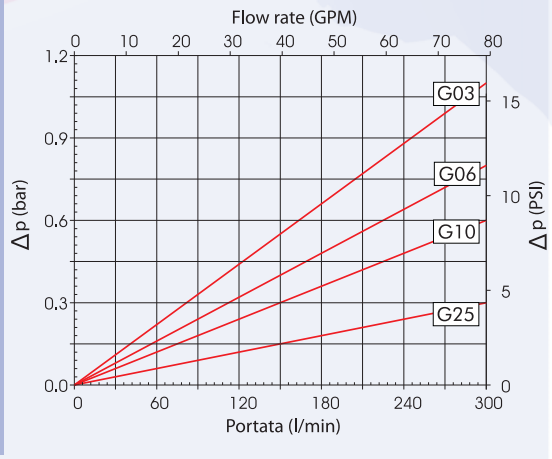

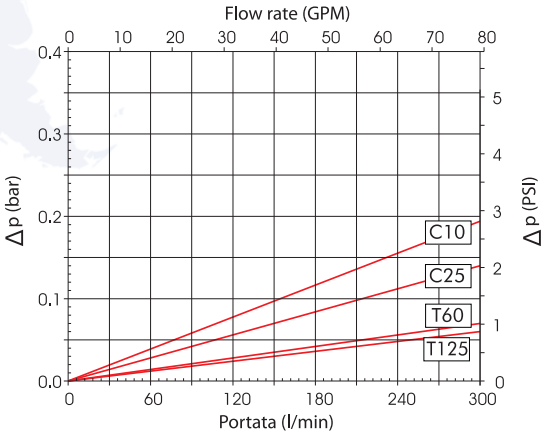

FILTRAZIONE IDRAULICA
HYDRAULIC FILTRATION

FILTREC®
Technical Filtration

serie
FCR-7

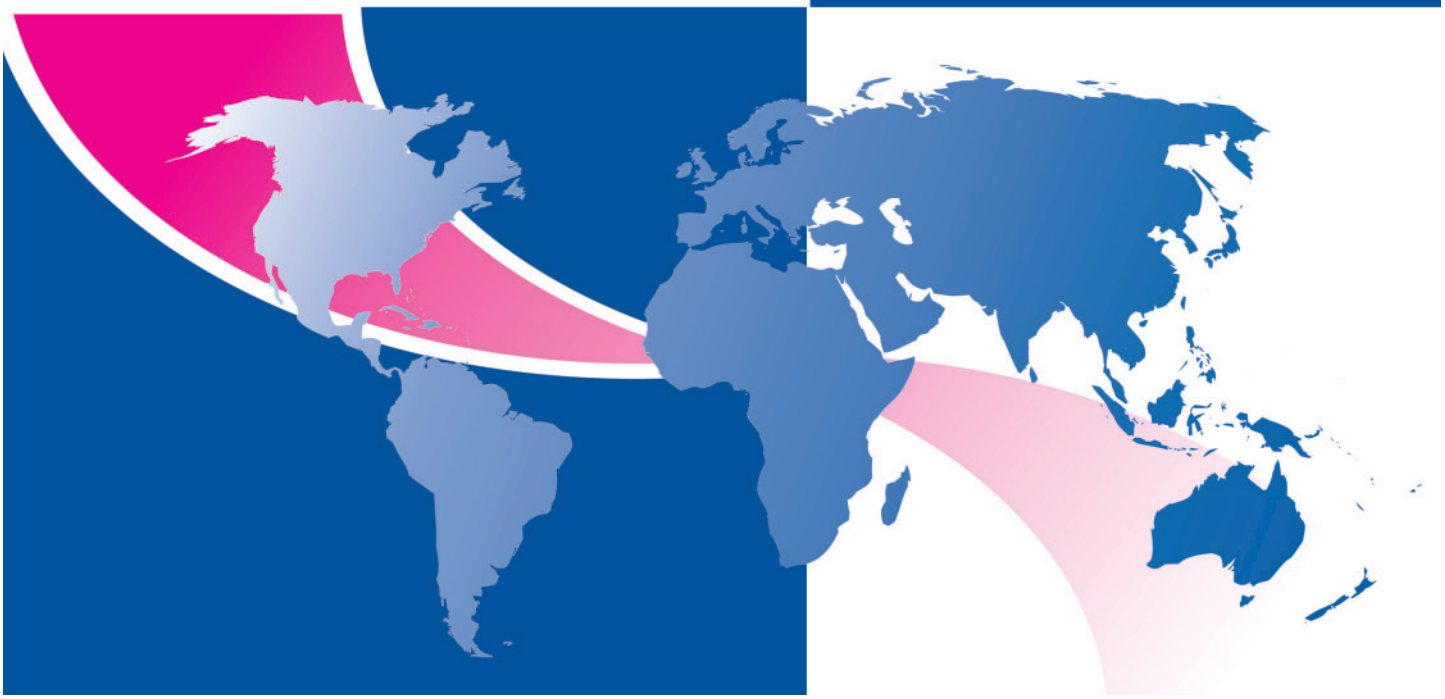

50% OFF ALL PRICES

Serie FCR-7

Filtri sul ritorno
Return filter

FILTER HOUSING

Technical Information

Description:	*Tank top mounting design return line with reusable or disposable element.*
Max flow rate:	*600 l/min (158 gpm)*
Max working pressure:	*As per NFPA T 3.10.5.1: 8 Bar (116 psi)*
Test pressure:	*As per NFPA T 3.10.5.1: 12 Bar (174 psi)*
Burst pressure:	*As per NFPA T 3.10.5.1: 16 Bar (232 psi)*
Connection Ports:	*BSP, NPT, SAE J514b, SAE J518*
Indicator:	*Visual and electrical.*
Working temperature:	*-25°C +100°C (-13°F +212°F)*
By-pass setting:	*0,8 or 1,7 Bar (11.6 or 24.6 psi)*
Materials:	• *Cover: nylon - aluminium* • *Head: aluminium* • *Bowl: carbon steel* • *Seal: Buna-N / Viton®*
Fluids compatibility:	*ISO 2943: Filter assembly compatible with mineral oils and some synthetic or vegetable oils. With other fluid applications please contact Filtrec S.p.A.*

FILTER ELEMENT

Filter media:	*Microglass fiber 3, 6, 10, 25 µm* *Cellulose 10, 25 µm* *Wire mesh 10, 25, 40, 60, 100, 120 µm*
Collapse pressure:	*As per ISO 2941: 10 Bar (145 psi)*

DESCRIPTION	ORDER CODE	PORTS	FLOW RATE	PRICE	ELEMENT	PRICE
10 MICRON CELLULOSE						
FCR-7-11-G10-B6-O-V17-O-O-O-C-R1	ZZ004796	1 1/4" BSP	36 L/MIN	£140.68	R711G10	£36.63
FCR-7-12-G10-B6-O-V17-O-O-O-C-R1	ZZ004797	1 1/4" BSP	50 L/MIN	£145.64	R712G10	£41.17
FCR-7-13-G10-B6-O-V17-O-O-O-C-R1	ZZ004798	1 1/4" BSP	80 L/MIN	£155.74	R713G10	£57.72
FCR-7-14-G10-B6-O-V17-O-O-O-C-R1	ZZ004799	1 1/4" BSP	120 L/MIN	£169.39	R714G10	£74.57
FCR-7-20-G10-B7-O-V17-O-O-O-C-R1	ZZ004800	1 1/2" BSP	120 L/MIN	£291.58	R720G10	£77.00
FCR-7-21-G10-B7-O-V17-O-O-O-C-R1	ZZ004801	1 1/2" BSP	160 L/MIN	£301.63	R721G10	£89.75
FCR-7-22-G10-B7-O-V17-O-O-O-C-R1	ZZ004802	1 1/2" BSP	240 L/MIN	£337.21	R722G10	£132.85
FCR-7-30-G10-B8-O-V17-O-O-O-C-R1	ZZ004803	2" BSP	180 L/MIN	£486.24	R730G10	£91.30
FCR-7-31-G10-B8-O-V17-O-O-O-C-R1	ZZ004804	2" BSP	200 L/MIN	£502.74	R731G10	£111.94
FCR-7-32-G10-B8-O-V17-O-O-O-C-R1	ZZ004805	2" BSP	320 L/MIN	£542.55	R732G10	£138.86
FCR-7-33-G10-B8-O-V17-O-O-O-C-R1	ZZ004806	2" BSP	380 L/MIN	£527.92	R733G10	£139.25
25 MICRON FIBREGLASS						
FCR-7-11-G25-B6-O-V17-O-O-O-C-R1	ZZ004807	1 1/4" BSP	90 L/MIN	£140.68	R711G25	£36.63
FCR-7-12-G25-B6-O-V17-O-O-O-C-R1	ZZ004808	1 1/4" BSP	120 L/MIN	£145.64	R712G25	£41.17
FCR-7-13-G25-B6-O-V17-O-O-O-C-R1	ZZ004809	1 1/4" BSP	160 L/MIN	£155.74	R713G25	£57.72
FCR-7-14-G25-B6-O-V17-O-O-O-C-R1	ZZ004810	1 1/4" BSP	180 L/MIN	£169.39	R714G25	£74.57
FCR-7-20-G25-B7-O-V17-O-O-O-C-R1	ZZ004811	1 1/2" BSP	160 L/MIN	£291.58	R720G25	£77.00
FCR-7-21-G25-B7-O-V17-O-O-O-C-R1	ZZ004812	1 1/2" BSP	200 L/MIN	£301.63	R721G25	£89.75
FCR-7-22-G25-B7-O-V17-O-O-O-C-R1	ZZ004813	1 1/2" BSP	280 L/MIN	£337.21	R722G25	£132.85
FCR-7-30-G25-B8-O-V17-O-O-O-C-R1	ZZ004814	2" BSP	300 L/MIN	£486.24	R730G25	£91.30
FCR-7-31-G25-B8-O-V17-O-O-O-C-R1	ZZ004815	2" BSP	360 L/MIN	£502.74	R731G25	£111.94
FCR-7-32-G25-B8-O-V17-O-O-O-C-R1	ZZ004816	2" BSP	460 L/MIN	£542.55	R732G25	£139.25
FCR-7-33-G25-B8-O-V17-O-O-O-C-R1	ZZ004817	2" BSP	580 L/MIN	£527.92	R733G25	£139.25

THE GIVEN FLOW RATE VALUES REFER TO APPLICATIONS WITH MINERAL OIL HAVING VISCOSITY OF 30 CST AT WORKING TEMPERATURE. FOR APPLICATIONS WITH DIFFERENT FLUID OR WORKING CONDITIONS, A CORRECTIVE FACTOR MUST BE APPLIED BY REFERING TO THE TECHNICAL INFORMATION.

OPTIONAL EXTRAS

	PRICE
VITON SEALS	
FCR-7-11 SERIES	£42.15
FCR-7-20 SERIES	£61.73
FCR-7-30 SERIES	£80.94
SECONDARY PORTS	
ALL SERIES	£4.71
MAGNETS	
FCR-7-11 SERIES	£22.85
FCR-7-20 SERIES	£42.02
FCR-7-30 SERIES	£60.97
DIFFUSERS	
FCR-7-11	£42.91
FCR-7-12	£42.91
FCR-7-13	£45.79
FCR-7-14	£48.84

	PRICE
DIFFUSERS	
FCR-7-20	£70.85
FCR-7-21	£93.11
FCR-7-22	£100.45
FCR-7-30	£71.74
FCR-7-31	£78.86
FCR-7-32	£86.03
FCR-7-33	£94.72
FILLER CAP	
FCR-7-20 SERIES	£12.21
FCR-7-30 SERIES	£14.33
INDICATORS	
R2 PRESSURE SWITCH O.C 1.3 BAR 18.85 PSI O.C	£27.98
R3 PRESSURE SWITCH C.C 1.3 BAR 18.85 PSI C.C	£27.56
R7 PRESSURE VACUUM GAUGE -1-5 BAR -14.5 BAR -72.5PSI	£9.67

Informazioni dimensionali - *Overall dimensions*

FCR-7-11 / 12 / 13 / 14

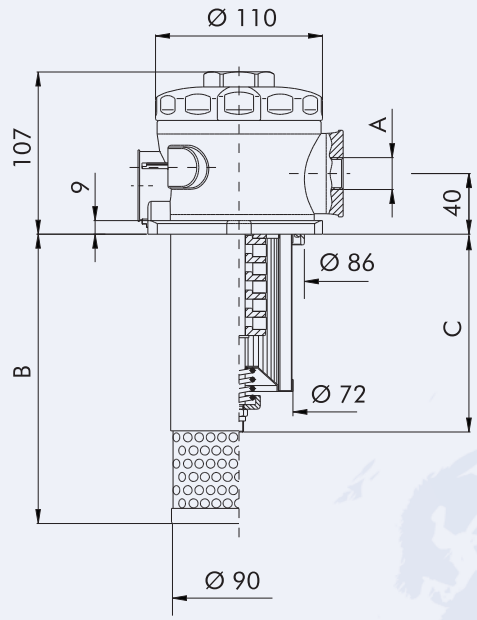

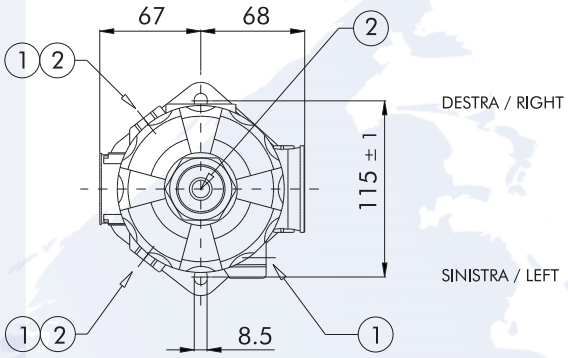

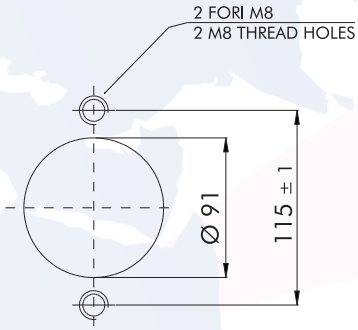

FORATURA SERBATOIO
TANK HOLE DIMENSIONS

(1) POSIZIONE INGRESSO SECONDARIO (D)
SECOND PORT OPTION (D)

(2) POSIZIONE INDICATORE
INDICATOR PORT 1/8" BSP

FCR-7-20 / 21 / 22

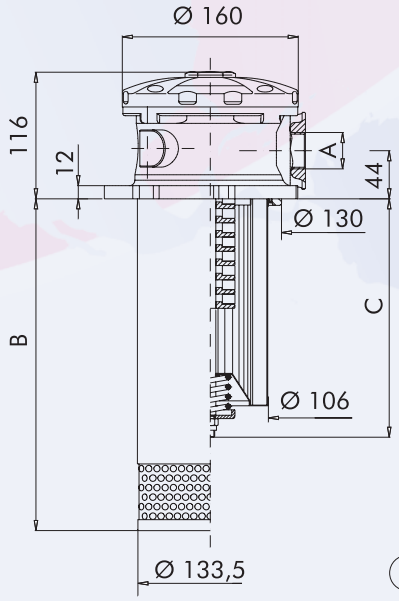

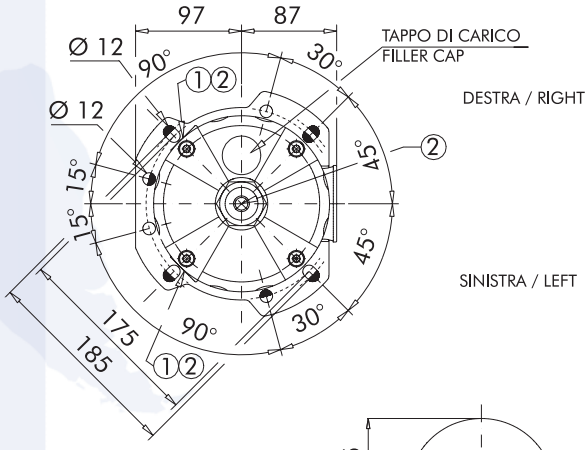

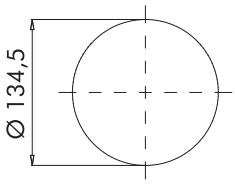

FORATURA SERBATOIO
TANK HOLE DIMENSIONS

(1) POSIZIONE INGRESSO SECONDARIO (D)
SECOND PORT OPTION (D)

(2) POSIZIONE INDICATORE
INDICATOR PORT 1/8" BSP

50% OFF ALL PRICES

FCR-7-30 / 31 / 32 / 33

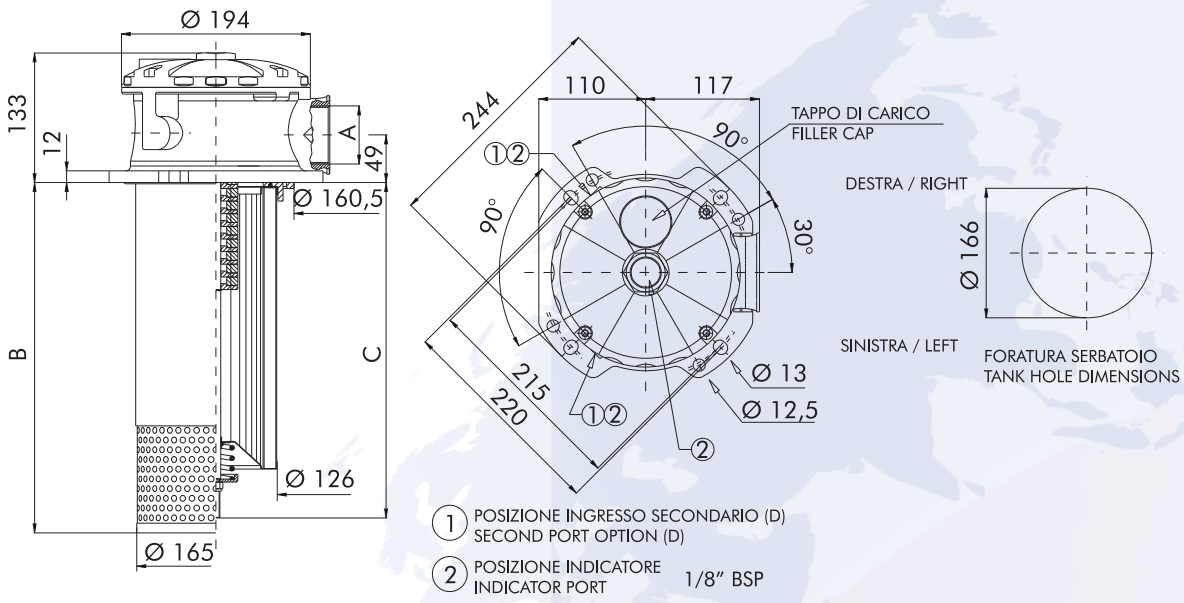

1) Grandezza nominale - *Nominal size*

Codice - *Code*	A	B	C	D	Cart. ricambio - *Element*
FCR-7-11	1/2" - 3/4" - 1" - 1"1/4 BSP 1/2" - 3/4" - 1" - 1"1/4 NPT 3/4"-16 UNF - SAE J514b 1 1/16"-12 UN-SAE J514b 1 5/16"-12 UN-SAE J514b 1 5/8"-12 UN-SAE J514b	195	133	3/8" - 1/2" BSP 3/8" - 1/2" NPT 9/16"-18 UN-SAE J514b 3/4"-16 UN - SAE J514b	R-7-11
FCR-7-12		195	178		R-7-12
FCR-7-13		345	228		R-7-13
FCR-7-14		345	328		R-7-14
FCR-7-20	1" - 1 1/4" - 1 1/2" BSP 1" - 1 1/4" - 1 1/2" NPT 1 5/16"-12 UN-SAE J514b 1 5/8"-12 UN-SAE J514b 1 7/8"-12 UN-SAE J514b 1 1/4" SAE J518 - 3000 1 1/2" SAE J518 - 3000	310	233	3/8" - 1/2" - 3/4" BSP 3/8" - 1/2" - 3/4" NPT 9/16"-18 UN-SAE J514b 3/4"-16 UN - SAE J514b 1 1/16"-12 UN-SAE J514b	R-7-20
FCR-7-21		310	303		R-7-21
FCR-7-22		515	508		R-7-22
FCR-7-30	1 1/2" - 2" BSP 1 1/2" - 2" NPT 1 7/8"-12 UN-SAE J514b 2 1/2"-12 UN-SAE J514b 1 1/2" SAE J518 - 3000 2" SAE J518 - 3000	360	265	3/8" - 1/2" - 3/4" BSP 3/8" - 1/2" - 3/4" NPT 9/16"-18 UN-SAE J514b 3/4"-16 UN - SAE J514b 1 1/16"-12 UN-SAE J514b	R-7-30
FCR-7-31		360	345		R-7-31
FCR-7-32		550	535		R-7-32
FCR-7-33		550	445		R-7-33

2) Grado di filtrazione - *Filtration ratings*

Codice - *Code*	Materiale - *Media*	Efficienza - *Efficiency*
0	senza cartuccia / *no element*	------
G03	microfibra inorganica / *microglass fiber*	$\beta_{4,5\ \mu M\ (C)} \geq 1000$
G06	microfibra inorganica / *microglass fiber*	$\beta_{7\ \mu M\ (C)} \geq 1000$
G10	microfibra inorganica / *microglass fiber*	$\beta_{12\ \mu M\ (C)} \geq 1000$
G25	microfibra inorganica / *microglass fiber*	$\beta_{27\ \mu M\ (C)} \geq 1000$
C10	carta trattata / *resin impregnated cellulose*	$\beta_{10\ \mu M\ (C)} \geq 2$
C25	carta trattata / *resin impregnated cellulose*	$\beta_{25\ \mu M\ (C)} \geq 2$
T10	tela metallica / *wire mesh*	------
T25	tela metallica / wire mesh	------
T40	tela metallica / *wire mesh*	------
T60	tela metallica / *wire mesh*	------
T100	tela metallica / *wire mesh*	------
T120	tela metallica / *wire mesh*	------

3) Guarnizioni - *Seals*

Codice - *Code*	Tipo - *Type*
---	NBR
V	Viton®

4) Connessioni - *Connection port*

Codice - *Code*	Connessione - *Connection*
B3	1/2" BSP
B4	3/4" BSP
B5	1" BSP
B6	1 1/4" BSP
B7	1 1/2" BSP
B8	2" BSP
F6M	1 1/4" SAE J518 - 3000/M
F7M	1 1/2" SAE J518 - 3000/M
F8M	2" SAE J518 - 3000/M
F6U	1 1/4" SAE J518 - 3000/UNC
F7U	1 1/2" SAE J518 - 3000/UNC
F8U	2" SAE J518 - 3000/UNC
N3	1/2" NPT
N4	3/4" NPT
N5	1" NPT
N6	1 1/4" NPT
N7	1 1/2" NPT
N8	2" NPT
R3	3/4" - 16 UNF-2B SAE J514b
R4	1 1/16" - 12 UN-2B SAE J514b
R5	1 5/16" - 12 UN-2B SAE J514b
R6	1 5/8" - 12 UN-2B SAE J514b
R7	1 7/8" - 12 UN-2B SAE J514b
R8	2 1/2" - 12 UN-2B SAE J514b

Contattare ufficio commerciale
Contact sales department

50% OFF ALL PRICES

5) Posizione ingressi secondari
Second port position

Codice - *Code*	Posizione - *Position*
0	senza / *without*
D	destra / *right*
S	sinistra / *left*

6) Ingressi secondari
Second connection port

Codice - *Code*	Connessione - *Connection*
B2	3/8" BSP
B3	1/2" BSP
B4	3/4" BSP
N2	3/8" NPT
N3	1/2" NPT
N4	3/4" NPT
R2	9/16" - 18 UNF-2B SAE J514b
R3	3/4" - 16 UNF-2B SAE J514b
R4	1 1/16" - 12 UN-2B SAE J514b

7) Taratura by-pass - *By-pass setting*

Codice - *Code*	Taratura - *Setting*
V08	Taratura 0,8 Bar *Setting 0.8 Bar (11.6 psi)*
V17	Taratura 1,7 Bar *Setting 1,7 Bar (24.6 psi)*

8) Colonna magnetica - *Magnets*

Codice - *Code*	Colonna magnetica - *Magnets*
0	senza / *without*
M	con / *with*

9) Diffusore - *Diffuser*

Codice - *Code*	Diffusore - *Diffuser*
0	senza / *without*
S	con / *with*

10) Tappo di carico - *Filler cap*

Codice - *Code*	Tappo di carico - *Filler cap*
0	senza / *without*
T	con / *with*

Non disponibile per serie FCR-7-11-..-14
Not available for FCR-7-11-..-14

11) Posizione indicatore
Indicator position

Codice - *Code*	Posizione - *Position*
0	senza / *without*
C	coperchio / *cover*
D	destra / *right*
S	sinistra / *left*

12) Indicatori - *Indicators*

Codice *Code*	Tipo indicatore - *Indicator type*	Taratura *Setting*
0	senza / *without*	-----
R1	manometro scala *pressure gauge indicator scale*	0÷10 Bar *0÷145 psi*
R2	pressostato n.a. taratura *pressure switch O.C.*	1,3 Bar *8,85 psi O.C.*
R3	pressostato n.c. taratura *pressure switch C.C.*	1,3 Bar *18,85 psi C.C.*
R7*	manovuotometro taratura *pressure vacuum gauge*	-1÷5 Bar *-14,5÷72,5 Psi*

* Solo per valvola taratura 1,7 Bar
** Only for valve 24,65 psi*

Codici per l'ordinazione - *Ordering information*

Filtro completo *Filter assembly* **FCR-7**

20	C10	V	B3	D	B3	V17	M	S	T	C	R1
1*	2*	3*	4*	5*	6*	7*	8*	9*	10*	11*	12*

Cartuccia *Filter element* **R-7**

20	C10	V
1*	2*	3*

* Viton® è un marchio registrato da DuPont - *Viton® is a registered trademark of DuPont*
Sono possibili variazioni al catalogo senza preavviso - *Catalogue may change without notice*

Curve di portata - *Pressure drop charts*

Le curve (secondo ISO 3968 classe B) sono ottenute con olio minerale avente viscosità di 30 cSt e densità di 0,86 Kg/dm³.
Per viscosità e densità diverse i dati variano.
Il numero relativo alla curva di portata è riferito all'attacco del filtro; es.: 3 indica attacco B3 o N3.

Pressure drop charts (as per ISO 3968 class B) are obtained using mineral oil with 30 cSt viscosity and 0,86 Kg/dm³ density.
With different values of viscosity and density data may vary.
The numbers indicate connection of the filters: i.e. 3 means B3 or N3 connections.

FCR-7-11 / 12 / 13 / 14

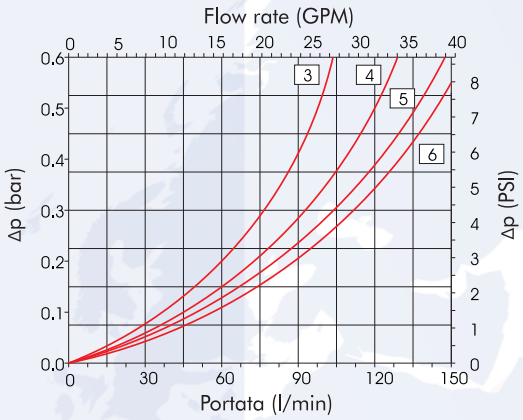

FCR-7-20 / 21 / 22

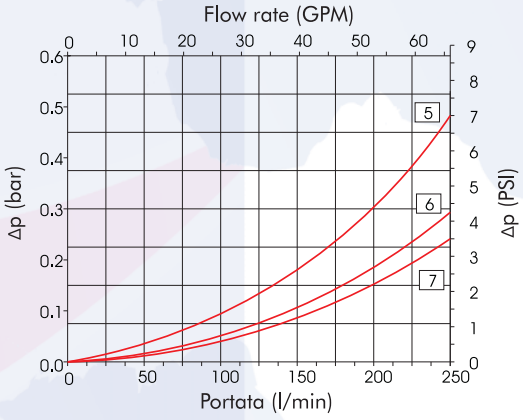

FCR-7-30 / 31 / 32 / 33

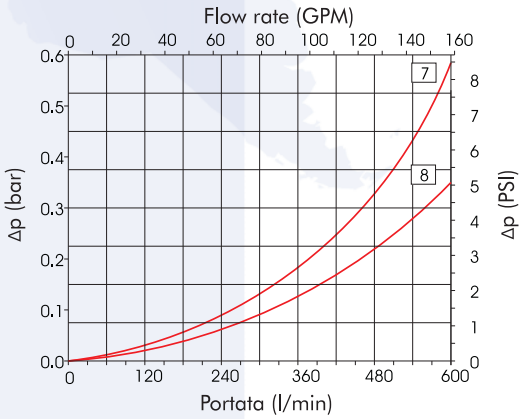

50% OFF ALL PRICES

R-7-11

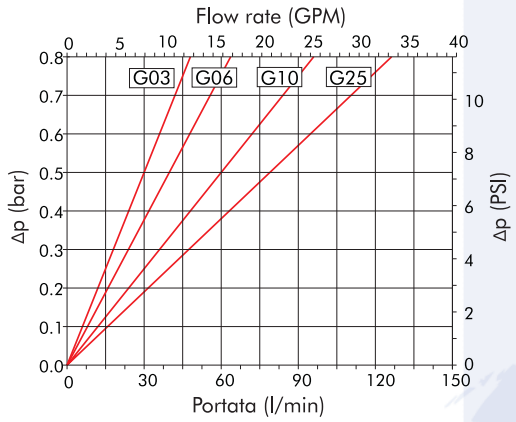

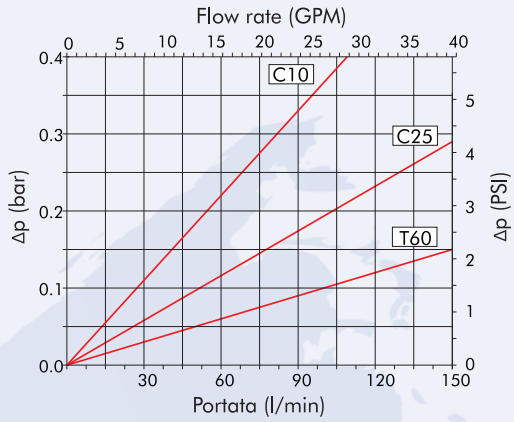

R-7-12

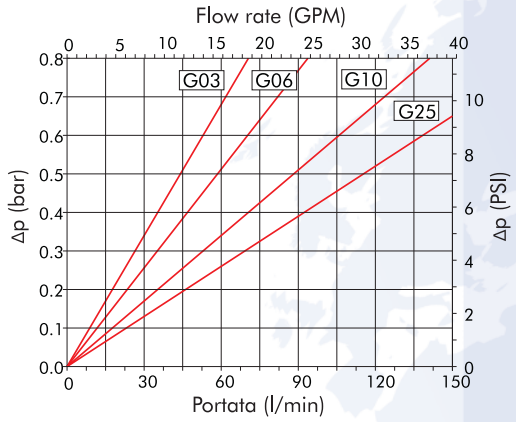

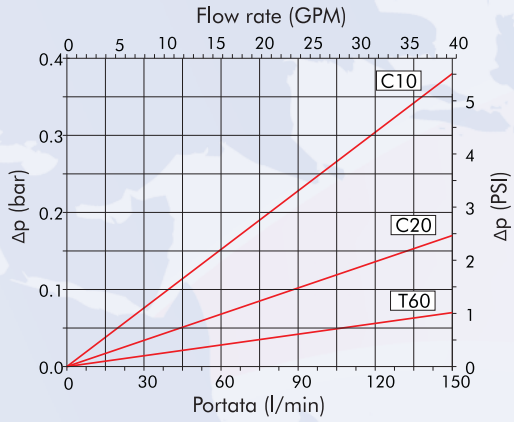

R-7-13

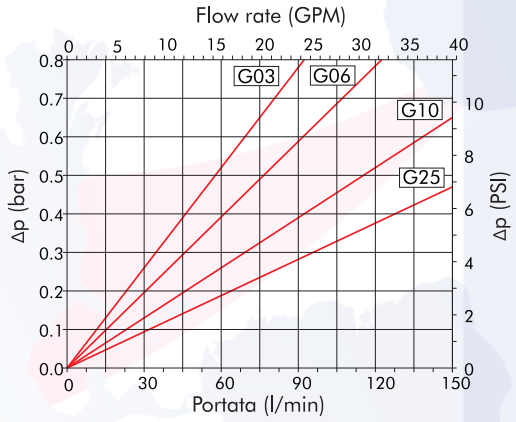

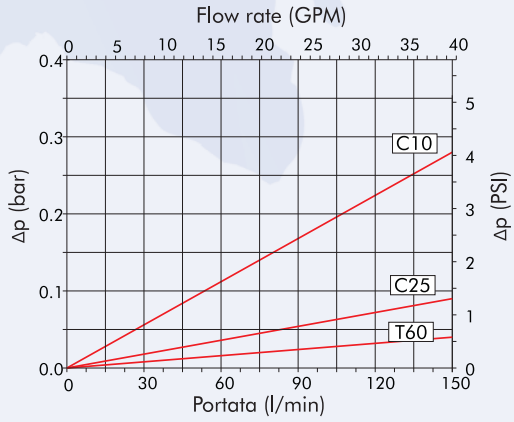

R-7-14

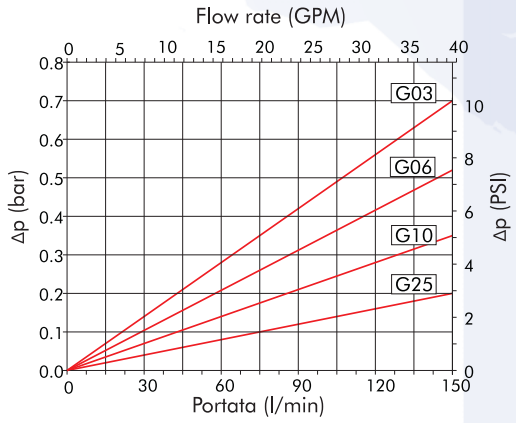

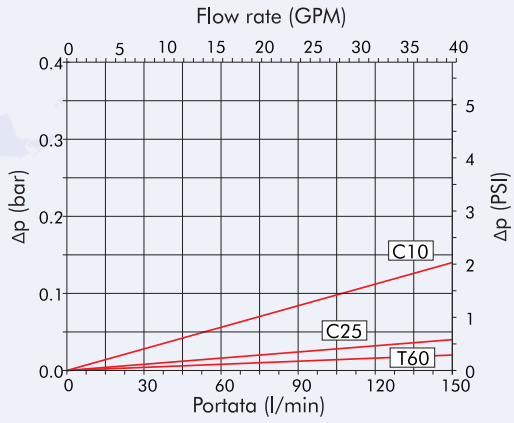

R-7-20

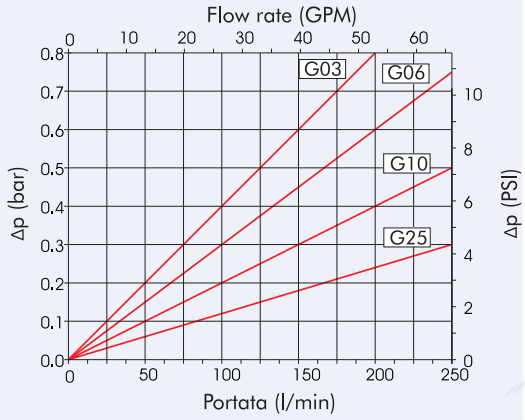

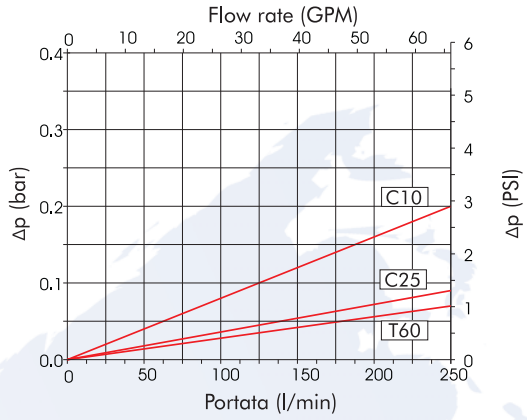

R-7-21

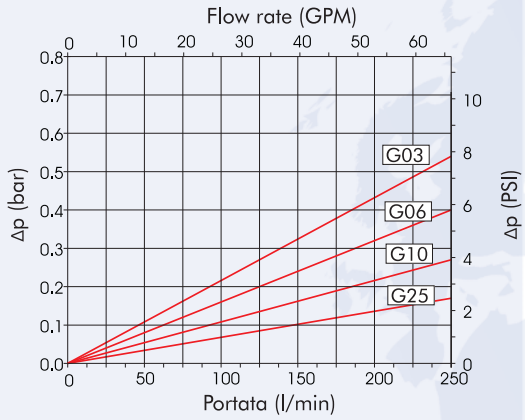

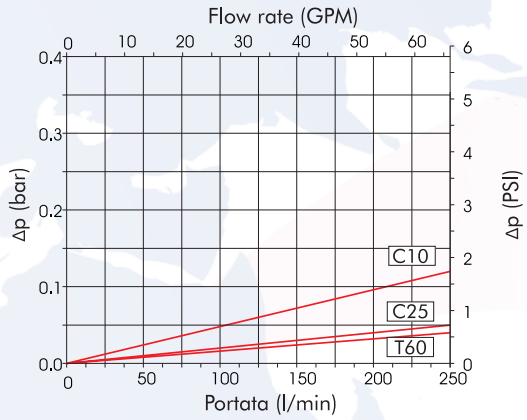

R-7-22

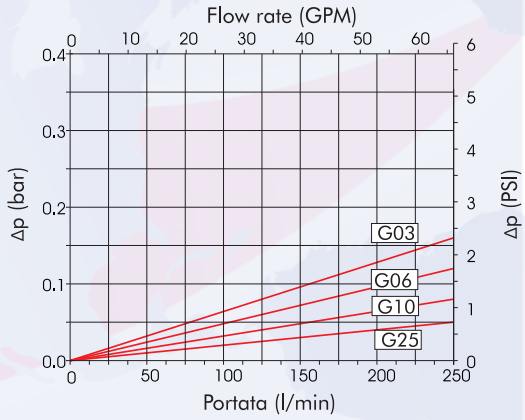

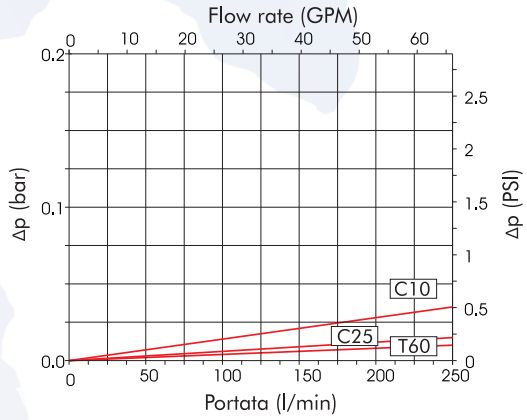

50% OFF ALL PRICES

R-7-30

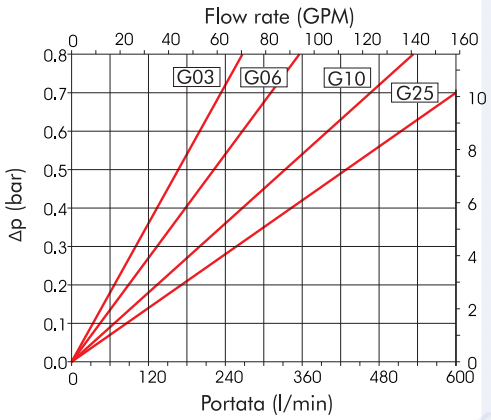

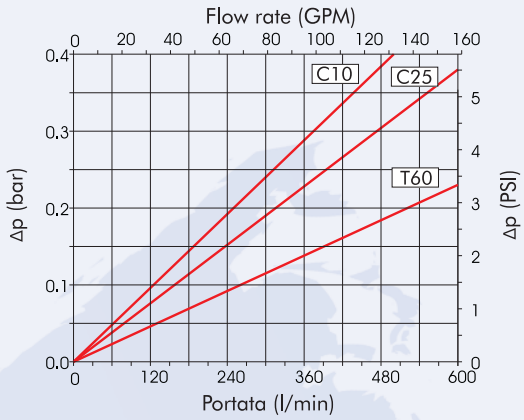

R-7-31

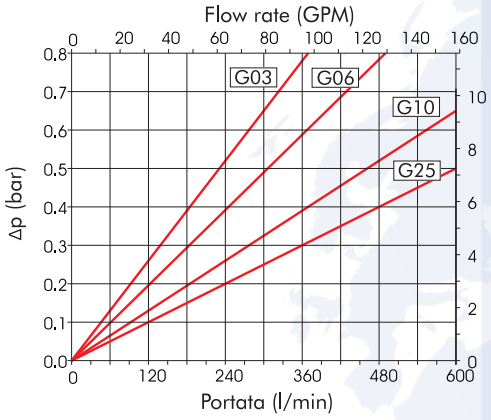

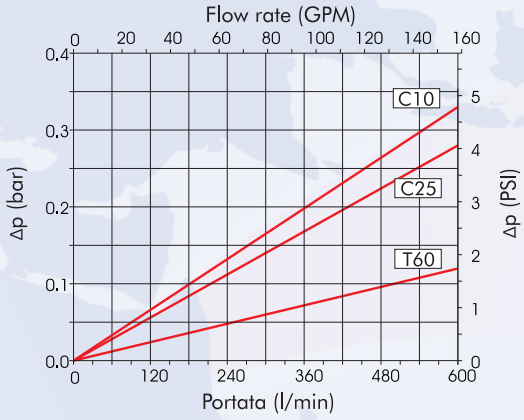

R-7-32

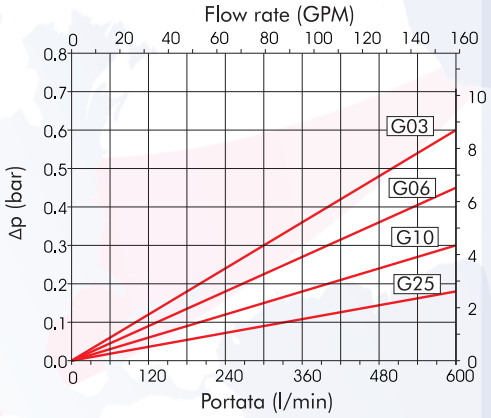

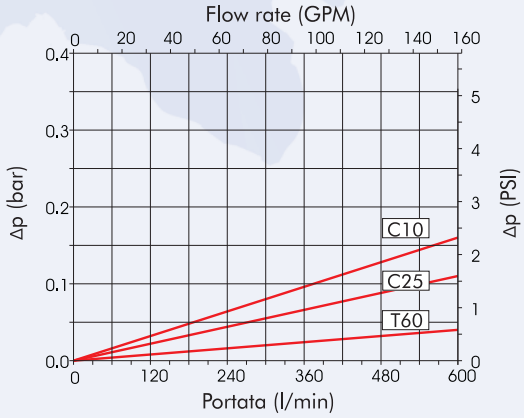

R-7-33

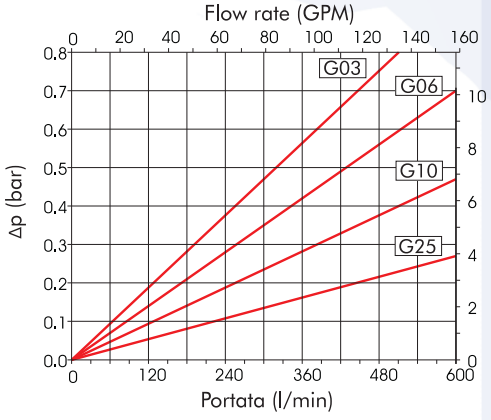

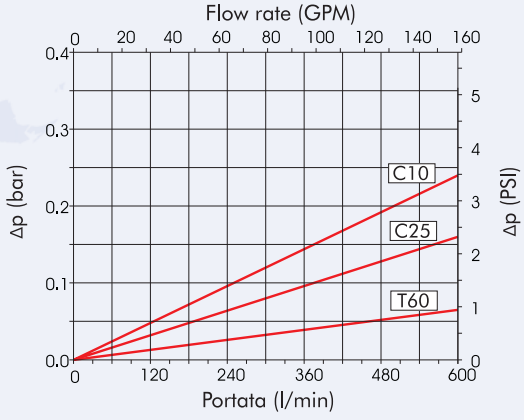

FILTRAZIONE IDRAULICA
HYDRAULIC FILTRATION

FILTREC®
Technical Filtration

serie
FVR-7

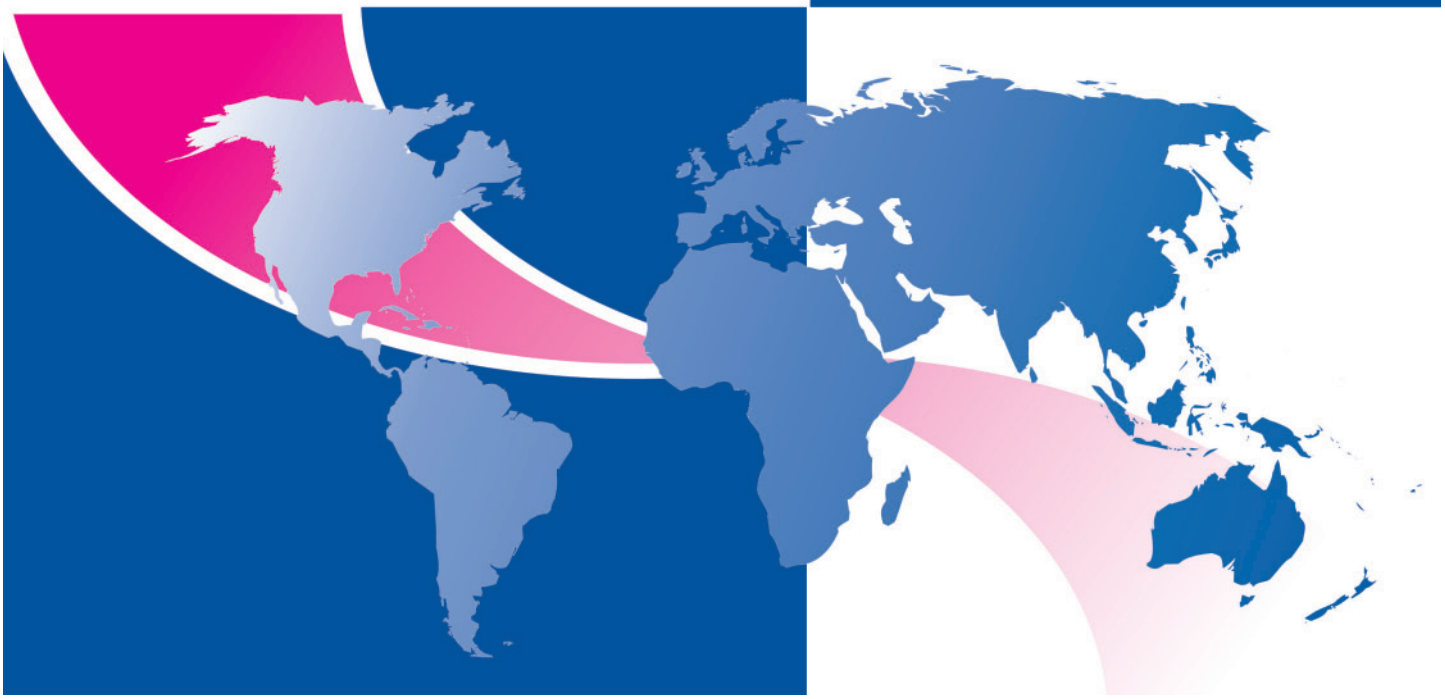

50% OFF ALL PRICES

Serie FVR-7

Filtri sul ritorno
Return filter

FILTER HOUSING

Technical Information

Description:	*In tank mounting design return line with reusable or disposable element.*
Max flow rate:	*600 l/min (158 gpm)*
Working temperature:	*-30°C +110°C (-22°F +230°F)*
By-pass setting:	*0,8 or 1,7 Bar (11.6 or 24.6 psi)*
Materials:	• *Head: aluminium* • *Seal: Buna-N / Viton®*
Fluids compatibility:	*ISO 2943: Filter assembly compatible with mineral oils and some synthetic or vegetable oils. With other fluid applications please contact Filtrec S.p.A.*

FILTER ELEMENT

Filter media:	*Microglass fiber 3, 6, 10, 25 µm* *Cellulose 10, 25 µm* *Wire mesh 10, 25, 40, 60, 100, 120 µm*
Collapse pressure:	*As per ISO 2941: 10 Bar (145 psi)*

DESCRIPTION	ORDER CODE	FLOW RATE	PRICE	ELEMENT	PRICE
10 MICRON CELLULOSE					
FVR-7-11-C10-V17-0	ZZ004818	110 L/MIN	£78.08	R711C10	£28.48
FVR-7-12-C10-V17-0	ZZ004819	120 L/MIN	£80.98	R712C10	£30.48
FVR-7-13-C10-V17-0	ZZ004820	200 L/MIN	£87.53	R713C10	£42.58
FVR-7-14-C10-V17-0	ZZ004821	160 L/MIN	£100.64	R714C10	£53.13
FVR-7-20-C10-V17-0	ZZ004822	160 L/MIN	£123.34	R720C10	£48.01
FVR-7-21-C10-V17-0	ZZ004823	220 L/MIN	£127.54	R721C10	£53.25
FVR-7-22-C10-V17-0	ZZ004824	300 L/MIN	£144.90	R722C10	£73.70
FVR-7-30-C10-V17-0	ZZ004825	300 L/MIN	£306.40	R730C10	£56.52
FVR-7-31-C10-V17-0	ZZ004826	400 L/MIN	£314.44	R731C10	£64.69
FVR-7-32-C10-V17-0	ZZ004827	500 L/MIN	£333.98	R732C10	£88.23
FVR-7-33-C10-V17-0	ZZ004828	600 L/MIN	£328.13	R733C10	£79.01
10 MICRON FIBREGLASS					
FVR-7-11-G10-V17-0	ZZ004829	40 L/MIN	£84.60	R711G10	£36.63
FVR-7-12-G10-V17-0	ZZ004830	60 L/MIN	£89.54	R712G10	£41.17
FVR-7-13-G10-V17-0	ZZ004831	70 L/MIN	£99.64	R713G10	£57.72
FVR-7-14-G10-V17-0	ZZ004832	120 L/MIN	£117.79	R714G10	£74.57
FVR-7-20-G10-V17-0	ZZ004833	120 L/MIN	£146.53	R720G10	£77.00
FVR-7-21-G10-V17-0	ZZ004834	140 L/MIN	£156.73	R721G10	£89.75
FVR-7-22-G10-V17-0	ZZ004835	240 L/MIN	£192.22	R722G10	£132.85
FVR-7-30-G10-V17-0	ZZ004836	180 L/MIN	£334.22	R730G10	£91.30
FVR-7-31-G10-V17-0	ZZ004837	200 L/MIN	£352.22	R731G10	£111.94
FVR-7-32-G10-V17-0	ZZ004838	300 L/MIN	£391.02	R732G10	£138.86
FVR-7-33-G10-V17-0	ZZ004839	360 L/MIN	£376.32	R733G10	£139.25
25 MICRON FIBREGLASS					
FVR-7-11-G25-V17-0	ZZ004840	100 L/MIN	£84.60	R711G25	£36.63
FVR-7-12-G25-V17-0	ZZ004841	120 L/MIN	£89.54	R712G25	£41.17
FVR-7-13-G25-V17-0	ZZ004842	180 L/MIN	£99.64	R713G25	£57.72
FVR-7-14-G25-V17-0	ZZ004843	160 L/MIN	£117.79	R714G25	£74.57
FVR-7-20-G25-V17-0	ZZ004844	160 L/MIN	£146.53	R720G25	£77.00
FVR-7-21-G25-V17-0	ZZ004845	200 L/MIN	£156.73	R721G25	£89.75
FVR-7-22-G25-V17-0	ZZ004846	300 L/MIN	£192.22	R722G25	£132.85
FVR-7-30-G25-V17-0	ZZ004847	300 L/MIN	£334.22	R730G25	£91.30
FVR-7-31-G25-V17-0	ZZ004848	360 L/MIN	£352.22	R731G25	£111.94
FVR-7-32-G25-V17-0	ZZ004849	500 L/MIN	£391.02	R732G25	£139.25
FVR-7-33-G25-V17-0	ZZ004850	560 L/MIN	£376.32	R733G25	£139.25

THE GIVEN FLOW RATE VALUES REFER TO APPLICATIONS WITH MINERAL OIL HAVING VISCOSITY OF 30 CST AT WORKING TEMPERATURE. FOR APPLICATIONS WITH DIFFERENT FLUID OR WORKING CONDITIONS, A CORRECTIVE FACTOR MUST BE APPLIED BY REFERING TO THE TECHNICAL INFORMATION.

OPTIONAL EXTRAS

VITON SEALS	PRICE
FVR-7-11	£42.15
FVR-7-20	£61.73
FVR-7-30	£80.94

MAGNETS	PRICE
FVR-7-11	£22.85
FVR-7-20	£42.02
FVR-7-30	£60.97

Informazioni dimensionali - *Overall dimensions*

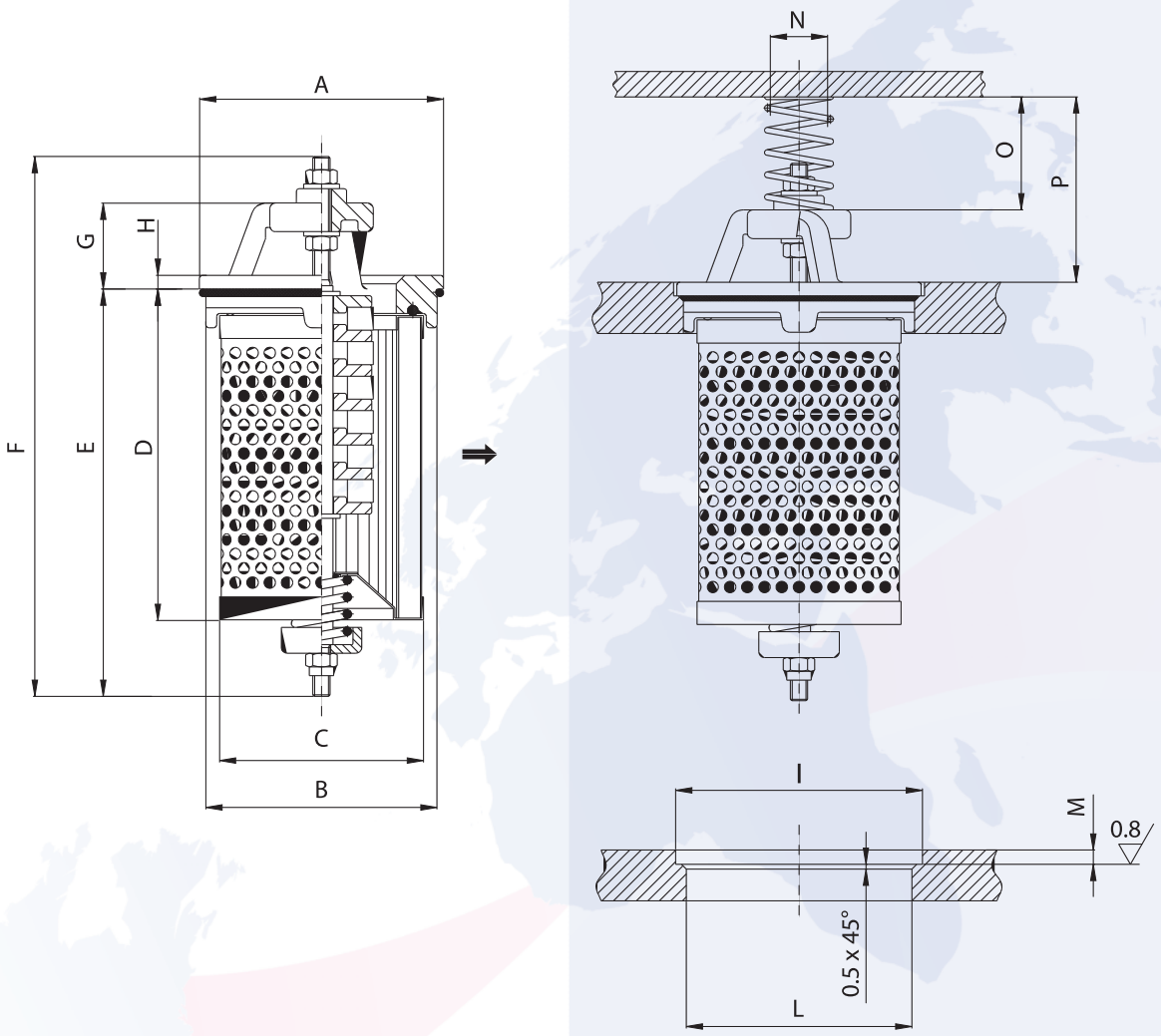

1) Grandezza nominale - *Nominal size*

Codice - *Code*	A	B	C	D	E	F	G	H	I	L	M	N	O	P	Cart. ricambio - *Element*
FVR-7-11	85	80,5	72	113	145	196	30	4,8	86,5	81,5	7,5	20	39,5	64,5	R-7-11
FVR-7-12	85	80,5	72	158	190	240	30	4,8	86,5	81,5	7,5	20	39,5	64,5	R-7-12
FVR-7-13	85	80,5	72	208	240	290	30	4,8	86,5	81,5	7,5	20	39,5	64,5	R-7-13
FVR-7-14	85	80,5	72	308	340	390	30	4,8	86,5	81,5	7,5	20	39,5	64,5	R-7-14
FVR-7-20	118	111	106	200	246	314	40,5	5,5	119,5	112	9	31	45	80	R-7-20
FVR-7-21	118	111	106	270	316	384	40,5	5,5	119,5	112	9	31	45	80	R-7-21
FVR-7-22	118	111	106	475	521	589	40,5	5,5	119,5	112	9	31	45	80	R-7-22
FVR-7-30	150	138	126	225	275	358	57,5	7	151,5	139	12,5	31	49	100	R-7-30
FVR-7-31	150	138	126	305	355	438	57,5	7	151,5	139	12,5	31	49	100	R-7-31
FVR-7-32	150	138	126	495	545	628	57,5	7	151,5	139	12,5	31	49	100	R-7-32
FVR-7-33	150	138	126	405	455	538	57,5	7	151,5	139	12,5	31	49	100	R-7-33

50% OFF ALL PRICES

2) Grado di filtrazione - *Filtration ratings*

Codice - *Code*	Materiale - *Media*	Efficienza - *Efficiency*
0	senza cartuccia / *no element*	------
G03	microfibra inorganica / *microglass fiber*	$ß_{4,5\ \mu m\ (c)} \geq 1000$
G06	microfibra inorganica / *microglass fiber*	$ß_{7\ \mu m\ (c)} \geq 1000$
G10	microfibra inorganica / *microglass fiber*	$ß_{12\ \mu m\ (c)} \geq 1000$
G25	microfibra inorganica / *microglass fiber*	$ß_{27\ \mu m\ (c)} \geq 1000$
C10	carta trattata / *resin impregnated cellulose*	$ß_{10\ \mu m\ (c)} \geq 2$
C25	carta trattata / *resin impregnated cellulose*	$ß_{25\ \mu m\ (c)} \geq 2$
T10	tela metallica / *wire mesh*	------
T25	tela metallica / *wire mesh*	------
T40	tela metallica / *wire mesh*	------
T60	tela metallica / *wire mesh*	------
T100	tela metallica / *wire mesh*	------
T120	tela metallica / *wire mesh*	------

3) Guarnizioni - *Seals*

Codice - *Code*	Tipo - *Type*
---	NBR
V	Viton®

4) Taratura by-pass - *By-pass setting*

Codice - *Code*	Taratura - *Setting*
V08	Taratura 0,8 Bar *Setting 0.8 Bar (11.6 psi)*
V17	Taratura 1,7 Bar *Setting 1,7 Bar (24.6 psi)*

5) Colonna magneticca - *Magnets*

Codice - *Code*	Colonna magnetica - *Magnets*
---	senza / *without*
M	con / *with*

Codici per l'ordinazione - *Ordering information*

Filtro completo *Filter assembly* **FVR-7**

20	C10	V	V17	M
1*	2*	3*	4*	5*

Cartuccia *Filter element* **R-7**

20	C10	V
1*	2*	3*

* Viton® è un marchio registrato da DuPont - *Viton® is a registered trademark of DuPont*
Sono possibili variazioni al catalogo senza preavviso - *Catalogue may change without notice*

Curve di portata - *Pressure drop charts*

Le curve (secondo ISO 3968 classe B) sono ottenute con olio minerale avente viscosità di 30 cSt e densità di 0,86 Kg/dm³. Per viscosità e densità diverse i dati variano.

Pressure drop charts (as per ISO 3968 class B) are obtained using mineral oil with 30 cSt viscosity and 0,86 Kg/dm³ density. With different values of viscosity and density data may vary.

R-7-11

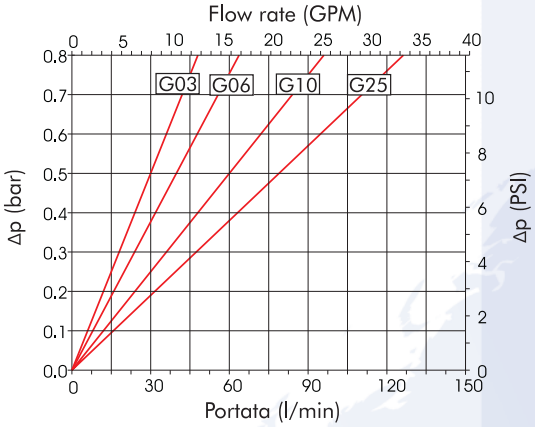

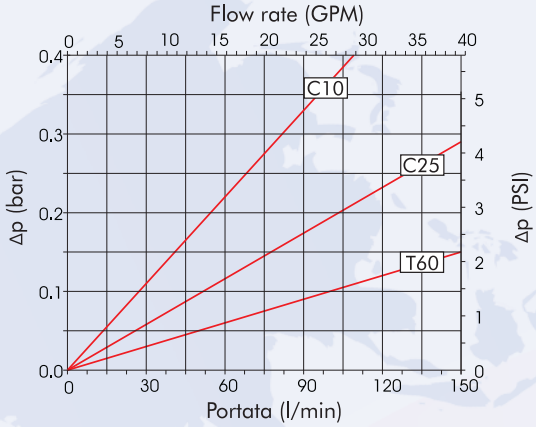

R-7-12

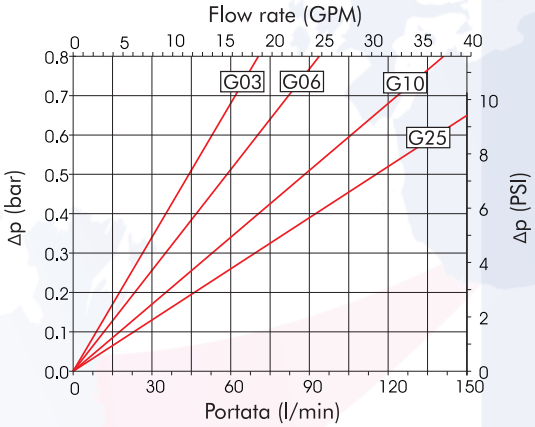

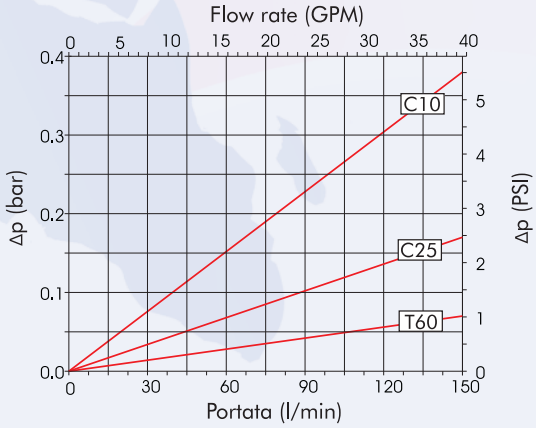

R-7-13

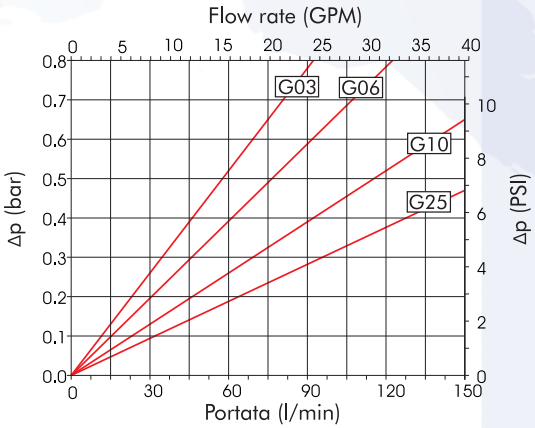

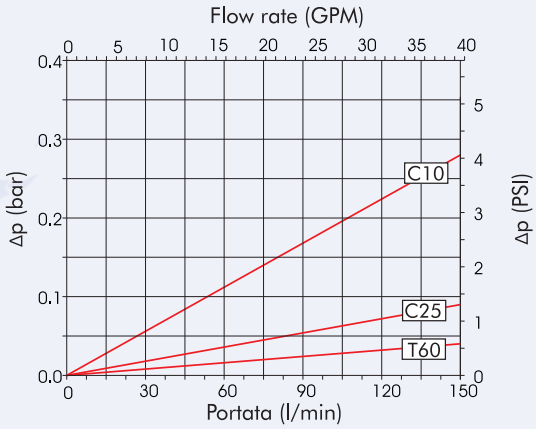

50% OFF ALL PRICES

R-7-14

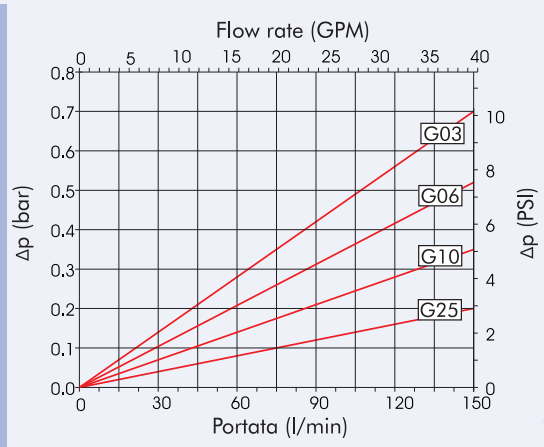

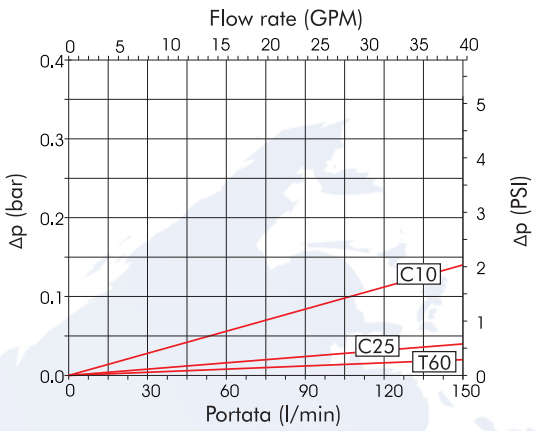

R-7-20

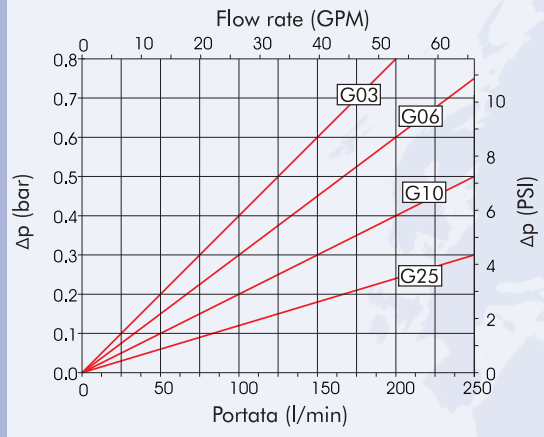

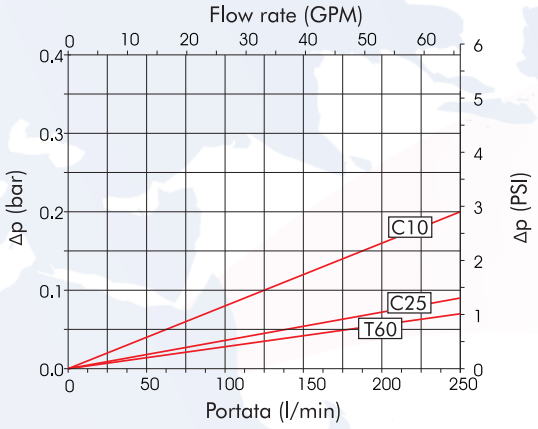

R-7-21

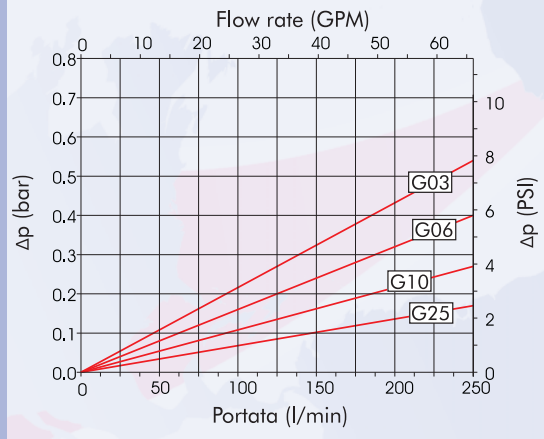

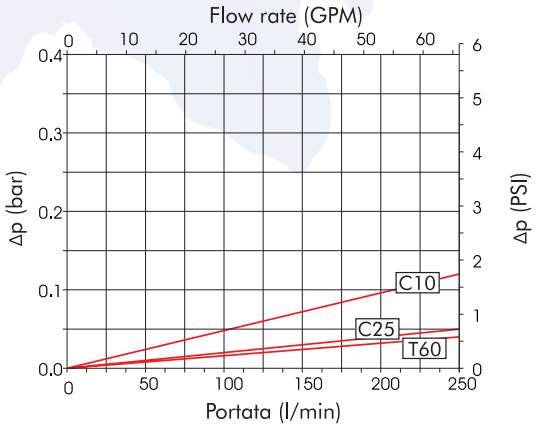

R-7-22

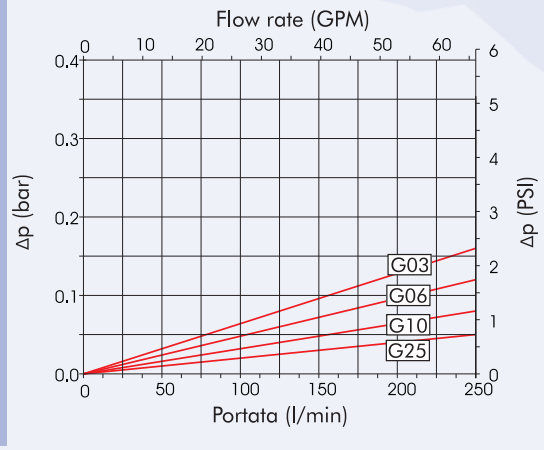

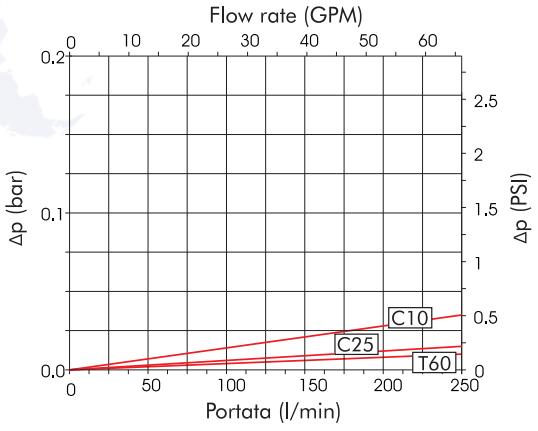

R-7-30

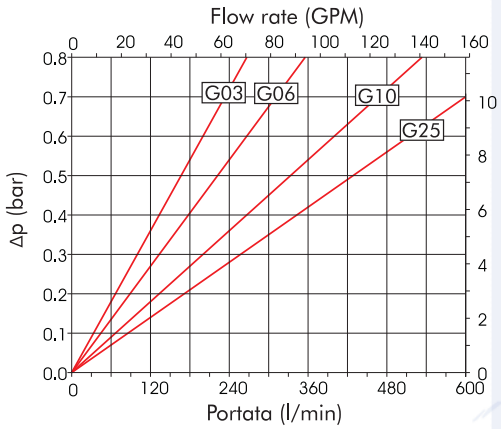

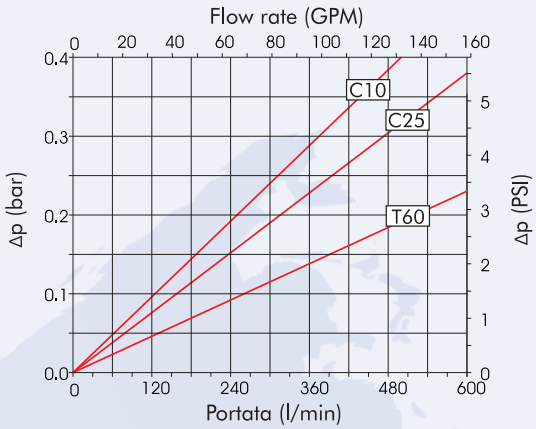

R-7-31

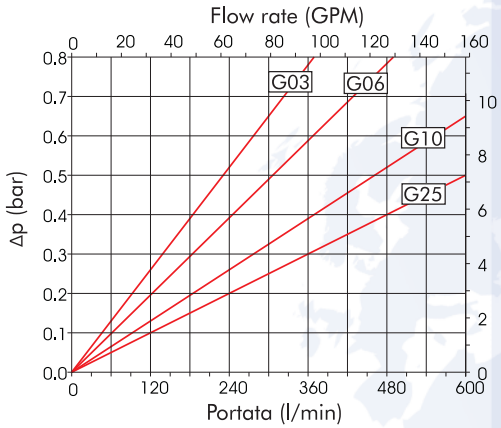

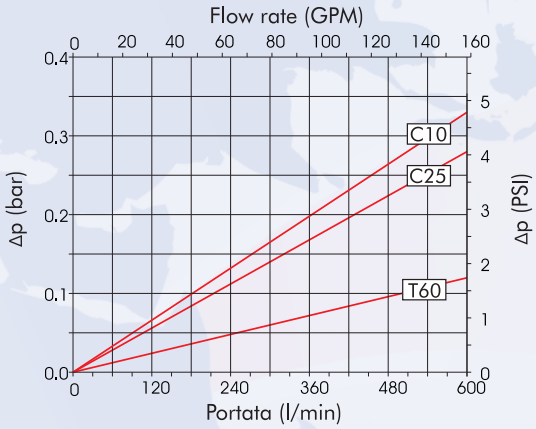

R-7-32

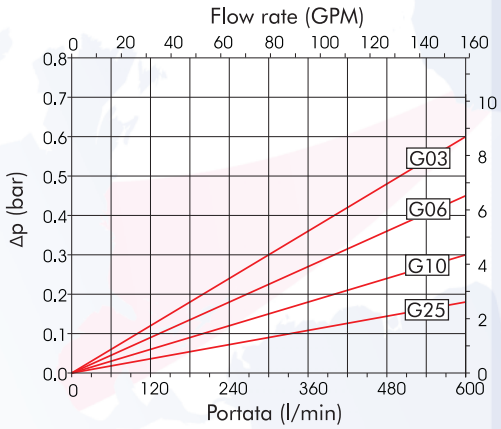

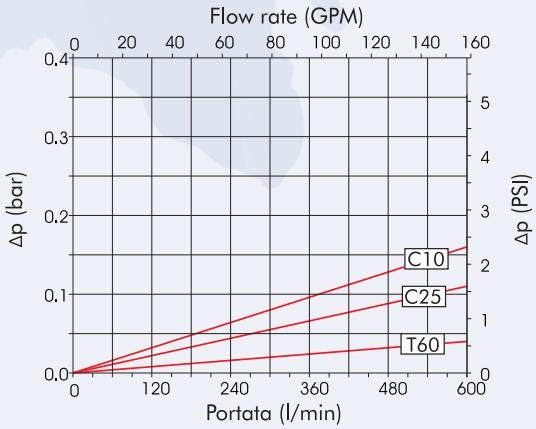

R-7-33

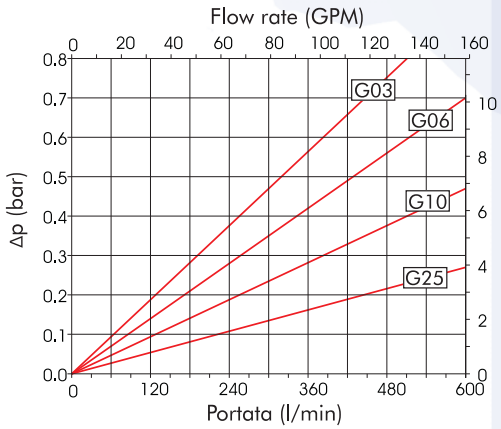

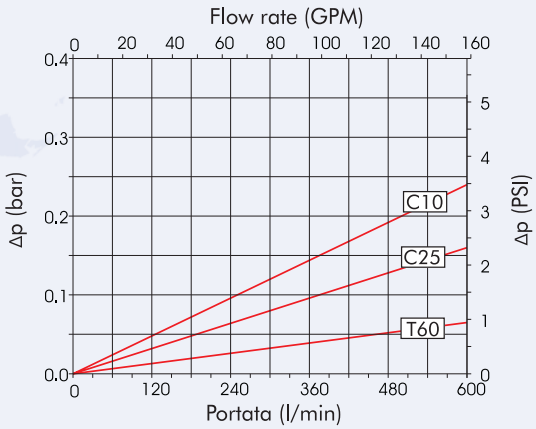

50% OFF ALL PRICES

FILTRAZIONE IDRAULICA
HYDRAULIC FILTRATION

FILTREC®
Technical Filtration

serie
FR-1

Serie FR-1

Filtri sul ritorno
Return filter

FILTER HOUSING

Technical Information

Description:	*Tank top mounting design return line with reusable or disposable element.*
Max flow rate:	*600 l/min (158 gpm)*
Max working pressure:	*As per NFPA T 3.10.5.1: 8 Bar (116 psi)*
Test pressure:	*As per NFPA T 3.10.5.1: 12 Bar (174 psi)*
Burst pressure:	*As per NFPA T 3.10.5.1: 16 Bar (232 psi)*
Connection Ports:	*BSP, NPT, SAE J514b*
Indicator:	*Visual and electrical.*
Working temperature:	*-25°C +100°C (-13°F +212°F)*
Materials:	• *Cover: aluminium* • *Head: aluminium* • *Bowl: nylon - carbon steel* • *Seal: Buna-N / Viton®*
Fluids compatibility:	*ISO 2943: Filter assembly compatible with mineral oils and some synthetic or vegetable oils. With other fluid applications please contact Filtrec S.p.A.*

FILTER ELEMENT

Filter media:	*Microglass fiber 3,6,10,25 µm* *Cellulose 10,25 µm* *Wire mesh 60, 125 µm*
Collapse pressure:	*As per ISO 2941: 10 Bar (145 psi)*
By-pass:	*Return line 1,7 Bar (24.6 psi)*

DESCRIPTION	ORDER CODE	PORTS	FLOW RATE	PRICE	ELEMENT	PRICE
ALL SUPPLIED WITH R1 INDICATOR ON TOP AS STANDARD						
10 MICRON CELLULOSE						
FR-1-10-C10-B-B2-0-C-R1	ZZ004851	3/8"BSP	16 L/MIN	£33.92	R110C10B	£12.19
FR-1-10-C10-B-B3-0-C-R1	ZZ004852	1/2"BSP	16 L/MIN	£33.92	R110C10B	£12.19
FR-1-10-C10-B-B4-O-C-R1	ZZ004853	3/4"BSP	16 L/MIN	£33.92	R110C10B	£12.19
FR-1-11-C10-B-B2-O-C-R1	ZZ004854	3/8"BSP	20 L/MIN	£42.15	R111C10B	£28.52
FR-1-11-C10-B-B3-O-C-R1	ZZ004855	1/2"BSP	20 L/MIN	£42.15	R111C10B	£28.52
FR-1-11-C10-B-B4-O-C-R1	ZZ004856	3/4"BSP	24 L/MIN	£42.15	R111C10B	£28.52
FR-1-20-C10-B-B3-O-C-R1	ZZ004857	1/2"BSP	40 L/MIN	£39.22	R120C10B	£14.19
FR-1-20-C10-B-B4-O-C-R1	ZZ004858	3/4"BSP	40 L/MIN	£39.22	R120C10B	£14.19
FR-1-22-C10-B-B5-O-C-R1	ZZ004859	1"BSP	65 L/MIN	£42.40	R122C10B	£15.80
FR-1-30-C10-B-B5-O-C-R1	ZZ004860	1"BSP	80 L/MIN	£60.24	R130C10B	£21.20
FR-1-40-C10-B-B7-O-C-R1	ZZ004861	1 1/2"BSP	120 L/MIN	£94.57	R140C10B	£23.85
FR-1-43-C10-B-B7-O-C-R1	ZZ004862	1 1/2"BSP	140 L/MIN	£99.64	R143C10B	£28.62
FR-1-50-C10-B-B8-O-C-R1	ZZ004863	2"BSP	180 L/MIN	£146.88	R150C10B	£27.30
FR-1-51-C10-B-B8-O-C-R1	ZZ004864	2"BSP	240 L/MIN	£164.44	R151C10B	£30.68
FR-1-60-C10-B-B8-O-C-R1	ZZ004865	2"BSP	300 L/MIN	£106.00	R160C10B	£30.68
FR-1-64-C10-B-B8-O-C-R1	ZZ004866	2"BSP	360 L/MIN	£137.80	R164C10B	£40.96
25 MICRON CELLULOSE						
FR-1-10-C25-B-B2-0-C-R1	ZZ004867	3/8"BSP	24 L/MIN	£33.92	R110C25B	£12.19
FR-1-10-C25-B-B3-0-C-R1	ZZ004868	1/2"BSP	30 L/MIN	£33.92	R110C25B	£12.19
FR-1-10-C25-B-B4-O-C-R1	ZZ004869	3/4"BSP	20 L/MIN	£33.92	R110C25B	£12.19
FR-1-11-C25-B-B2-O-C-R1	ZZ004870	3/8"BSP	30 L/MIN	£42.15	R111C25B	£28.52
FR-1-11-C25-B-B3-O-C-R1	ZZ004871	1/2"BSP	36 L/MIN	£42.15	R111C25B	£28.52
FR-1-11-C25-B-B4-O-C-R1	ZZ004872	3/4"BSP	26 L/MIN	£42.15	R111C25B	£28.52
FR-1-20-C25-B-B3-O-C-R1	ZZ004972	1/2"BSP	50 L/MIN	£39.22	R120C25B	£14.19
FR-1-20-C25-B-B4-O-C-R1	ZZ004973	3/4"BSP	40 L/MIN	£39.22	R120C25B	£14.19
FR-1-22-C25-B-B5-O-C-R1	ZZ004974	1"BSP	60 L/MIN	£42.40	R122C25B	£15.80
FR-1-30-C25-B-B5-O-C-R1	ZZ004975	1"BSP	80 L/MIN	£60.24	R130C25B	£21.20
FR-1-40-C25-B-B7-O-C-R1	ZZ004976	1 1/2"BSP	140 L/MIN	£94.57	R140C25B	£23.85
FR-1-43-C25-B-B7-O-C-R1	ZZ004977	1 1/2"BSP	160 L/MIN	£99.64	R143C25B	£34.17
FR-1-50-C25-B-B8-O-C-R1	ZZ004978	2"BSP	260 L/MIN	£146.88	R150C25B	£27.30
FR-1-51-C25-B-B8-O-C-R1	ZZ004979	2"BSP	360 L/MIN	£164.44	R151C25B	£30.68
FR-1-60-C25-B-B8-O-C-R1	ZZ004980	2"BSP	400 L/MIN	£106.00	R160C25B	£30.68
FR-1-64-C25-B-B8-O-C-R1	ZZ004981	2"BSP	450 L/MIN	£137.80	R164C25B	£40.96

THE GIVEN FLOW RATE VALUES REFER TO APPLICATIONS WITH MINERAL OIL HAVING VISCOSITY OF 30 CST AT WORKING TEMPERATURE. FOR APPLICATIONS WITH DIFFERENT FLUID OR WORKING CONDITIONS, A CORRECTIVE FACTOR MUST BE APPLIED BY REFERING TO THE TECHNICAL INFORMATION.

OPTIONAL EXTRAS

VITON SEALS	PRICE
FR1-10	£5.38
FR1-20/FR1-30	£13.23
FR1-40	£22.39
FR1-50	£55.20
FR1-60	£55.20
FILLER CAPS - BUNA	
FR1-10	£7.42
FR1-20/FR1-30	£7.84
FR1-40	£8.44
FR1-50	£20.14
FR1-60	£20.14
FILLER CAPS - VITON	
FR1-10/1-20/1-30	£9.24
FR1-40	£10.26
FR1-50/1-60	£24.89

INDICATORS	
R2	£27.98
R3	£27.56
R6	£34.60
R7	£9.67

50% OFF ALL PRICES

Informazioni dimensionali - *Overall dimensions*

FR1-1-10 / 11 / 20 / 22 / 30

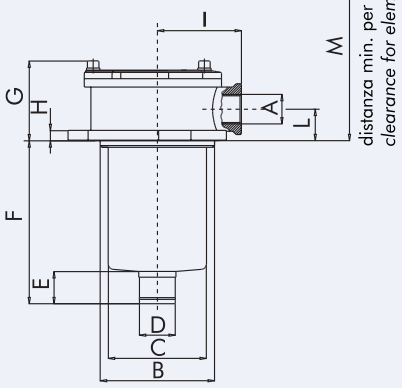

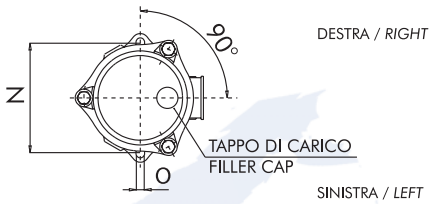

FORATURA SERBATOIO
TANK HOLE DIMENSIONS

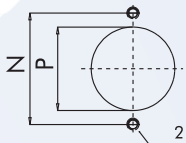

2 FORI M6 PER SERIE FR-1-10 / 11
2 FORI M8 PER SERIE FR-1-20 / 22 / 30
2 M6 THREAD HOLES FOR FR-1-10/11 SERIE
2 M8 THREAD HOLES FOR FR1-20/22/30 SERIE

FR1-1-40 / 43

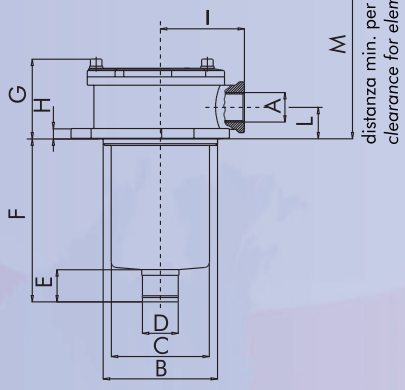

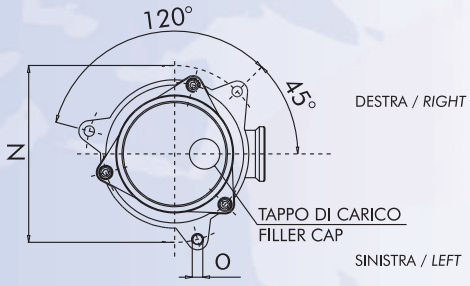

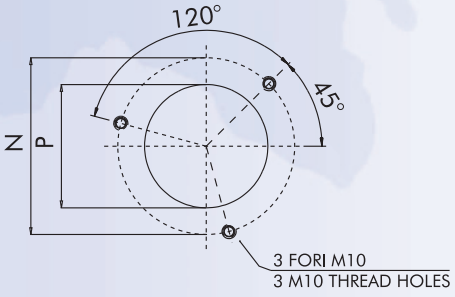

FR-1-1-50 / 51 / 60 / 64

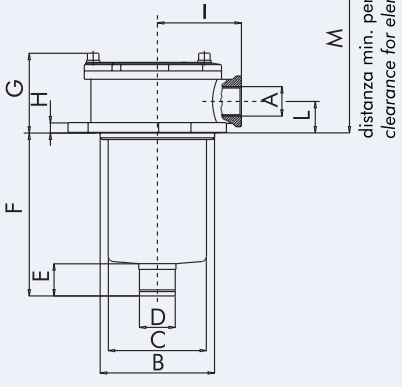

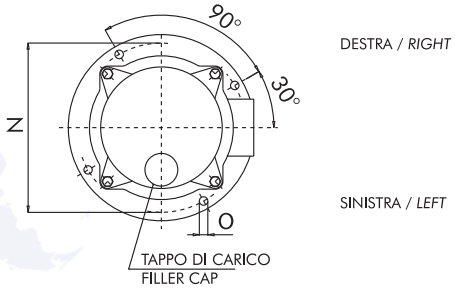

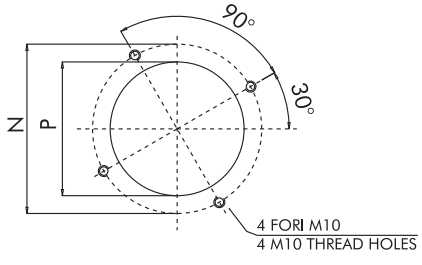

1) Grandezza nominale - *Nominal size*

Codice - *Code*	A	B	C	D	E	F	G	H	I	L	M	N	O	P	Cart. ricambio - *Element*
FR-1-10	3/8" - 1/2" - 3/4" BSP 3/8" - 1/2" - 3/4" NPT 9/16" - 18 UNF - SAE J514b	66,5	62	24	22	83	54	8	51	20,5	150	89±1	7	67,5	R-1-10
FR-1-11	3/4"-16 UNF - SAE J514b 1 1/16"-12 UN-SAE J514b	66,5	62	24	22	152	54	8	51	20,5	220	89±1	7	67,5	R-1-11
FR-1-20	1/2" - 3/4" BSP 1/2" - 3/4" NPT 3/4"-16 UNF - SAE J514b 1 1/16"-12 UN-SAE J514b	87,5	80	27,5	27	106	73	11	67	28,5	190	115±1	8,5	88,5	R-1-20
FR-1-22	3/4" - 1" BSP 3/4" - 1" NPT	87,5	80	27,5	27	151	73	11	67	28,5	230	115±1	8,5	88,5	R-1-22
FR-1-30	1 1/16"-12 UN-SAE J514b 1 5/16"-12 UN-SAE J514b	87,5	80	40	29	232	73	11	67	28,5	310	115±1	8,5	88,5	R-1-30
FR-1-40	1" - 1 1/4"- 1 1/2" BSP 1" - 1 1/4"- 1 1/2" NPT	129	111	40	36	230	87	11	95	35,5	320	175	11	130	R-1-40
FR-1-43	1 5/16"-12 UN-SAE J514b 1 5/8"-12 UN-SAE J514b 1 7/8"-12 UN-SAE J514b	129	111	40	36	273	87	11	95	35,5	360	175	11	130	R-1-43
FR-1-50	1 1/4" - 1 1/2" - 2" BSP 1 1/4" - 1 1/2" - 2" NPT	174	151	50	41	171	108	11	119	41	270	220	11	175	R-1-50
FR-1-51	1 5/8"-12 UN-SAE J514b	174	151	50	41	238	108	11	119	41	340	220	11	175	R-1-51
FR-1-60	1 7/8"-12 UN-SAE J514b 2 1/2"-12 UN-SAE J514b	174	151	64	41	238	108	11	119	41	340	220	11	175	R-1-60
FR-1-64	1 1/2" - 2" BSP 1 1/2" - 2" NPT 1 7/8"-12 UN-SAE J514b 2 1/2"-12 UN-SAE J514b	174	151	64	41	298	108	11	119	41	380	220	11	175	R-1-64

2) Grado di filtrazione - *Filtration ratings*

Codice - *Code*	Materiale - *Media*	Efficienza - *Efficiency*
0	senza cartuccia / *no element*	------
G03	microfibra inorganica / *microglass fiber*	$\beta_{4,5\ \mu m\ (c)} \geq 1000$
G06	microfibra inorganica / *microglass fiber*	$\beta_{7\ \mu m\ (c)} \geq 1000$
G10	microfibra inorganica / *microglass fiber*	$\beta_{12\ \mu m\ (c)} \geq 1000$
G25	microfibra inorganica / *microglass fiber*	$\beta_{27\ \mu m\ (c)} \geq 1000$
C10	carta trattata / *resin impregnated cellulose*	$\beta_{10\ \mu m\ (c)} \geq 2$
C25	carta trattata / *resin impregnated cellulose*	$\beta_{25\ \mu m\ (c)} \geq 2$
T60	tela metallica / *wire mesh*	------
T125	tela metallica / *wire mesh*	------

50% OFF ALL PRICES

3) Guarnizioni - *Seals*

Codice - *Code*	Tipo - *Type*
---	NBR
V	Viton®

4) Connessioni - *Connection port*

Codice - *Code*	Connessione - *Connection*
B2	3/8″ BSP
B3	1/2″ BSP
B4	3/4″ BSP
B5	1″ BSP
B6	1 1/4″ BSP
B7	1 1/2″ BSP
B8	2″ BSP
N2	3/8″ NPT
N3	1/2" NPT
N4	3/4″ NPT
N5	1″ NPT
N6	1 1/4″ NPT
N7	1 1/2″ NPT
N8	2″ NPT
R2	9/16″ - 18 UNF-2B SAE J514b
R3	3/4″ - 16 UNF-2B SAE J514b
R4	1 1/16″ - 12 UN-2B SAE J514b
R5	1 5/16″ - 12 UN-2B SAE J514b
R6	1 5/8″ - 12 UN-2B SAE J514b
R7	1 7/8″ - 12 UN-2B SAE J514b
R8	2 1/2″ - 12 UN-2B SAE J514b

5) Tappo di carico - *Filler cap*

Codice - *Code*	Tipo - *Type*
0	senza / *without*
T	con / *with*

6) Posizione indicatore
Indicator position

Codice - *Code*	Posizione - *Position*
0	senza / *without*
C	coperchio / *cover* *
D	destra / *right* **
S	sinistra / *left*

* Non disponibile per FR-1-10 con tappo di carico
* *Not available for FR-1-10 with filler cap*
** Non disponibile per FR-1-1x ed FR-1-4x
** *Not available for FR-1-1x and FR-1-4x*

7) Indicatori - *Indicators*

Codice *Code*	Tipo indicatore - *Indicator type*	Taratura *Setting*
0	senza / *without*	
R1	manometro scala *pressure gauge indicator scale*	0÷10 Bar *0÷145 psi*
R2	pressostato n.a. taratura *pressure switch O.C.*	1,3 Bar *18,85 psi O.C.*
R3	pressostato n.c. taratura *pressure switch C.C.*	1,3 Bar *18,85 psi C.C.*
R6	pressostato visivo *visual pressure*	1,2 Bar *17,4 Psi*
R7	manovuotometro taratura *pressure vacuum gauge*	-1÷5 Bar *-14,5÷72,5 Psi*

Codici per l'ordinazione - *Ordering information*

Filtro completo
Filter assembly

FR-1

20	C10	B	V	B3	T	C	R1
1*	2*		3*	4*	5*	6*	7*

Cartuccia
Filter element

R-1

20	C10	B	V
1*	2*		3*

* Viton® è un marchio registrato da DuPont - *Viton® is a registered trademark of DuPont*
Sono possibili variazioni al catalogo senza preavviso - *Catalogue may change without notice*

Curve di portata - *Pressure drop charts*

Le curve (secondo ISO 3968 classe B) sono ottenute con olio minerale avente viscosità di 30 cSt e densità di 0,86 Kg/dm³.
Per viscosità e densità diverse i dati variano.
Il numero relativo alla curva di portata è riferito all'attacco del filtro; es.: 2 indica attacco B2 o N2.

Pressure drop charts (as per ISO 3968 class B) are obtained using mineral oil with 30 cSt viscosity and 0,86 Kg/dm³ density.
With different values of viscosity and density data may vary.
The numbers indicate connection of the filters: i.e. 2 means B2 or N2 connections.

FR-1-10 / 11

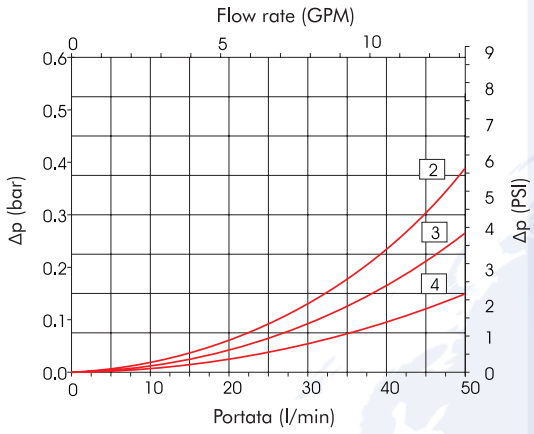

FR-1-20 / 22

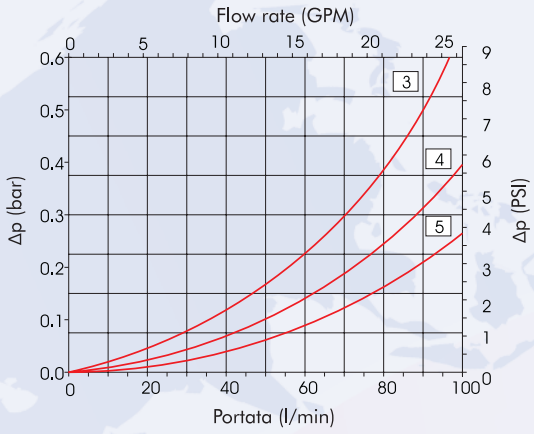

FR-1-30

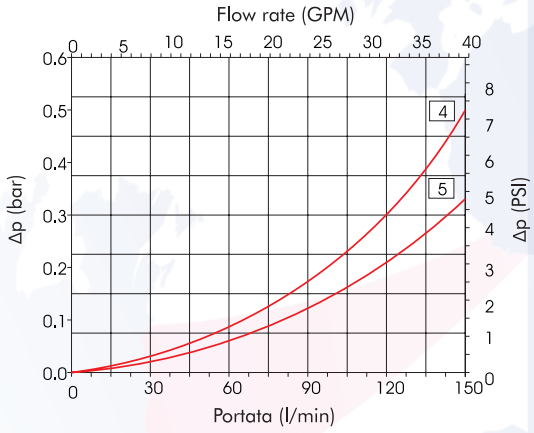

FR-1-40 / 43

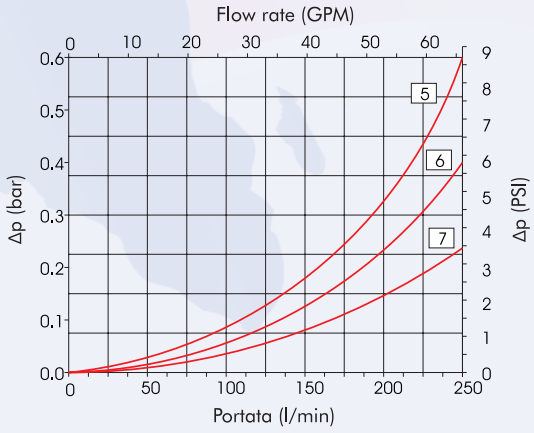

FR-1-50 / 51 / 60

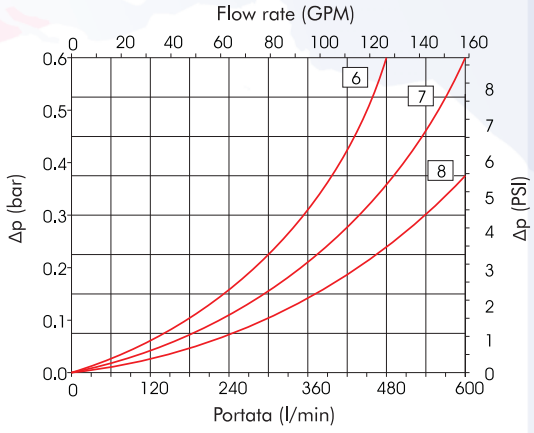

FR-1-64

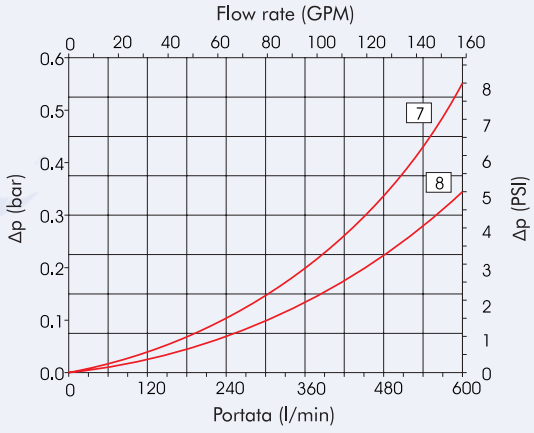

50% OFF ALL PRICES

R-1-10

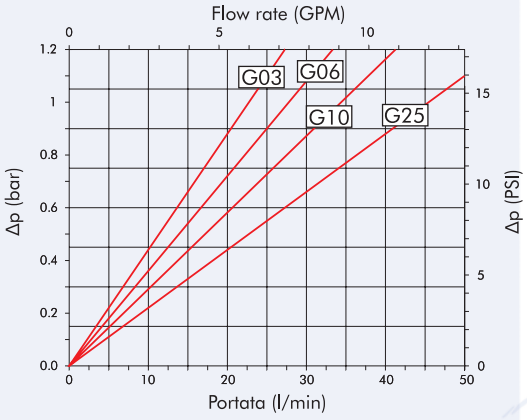

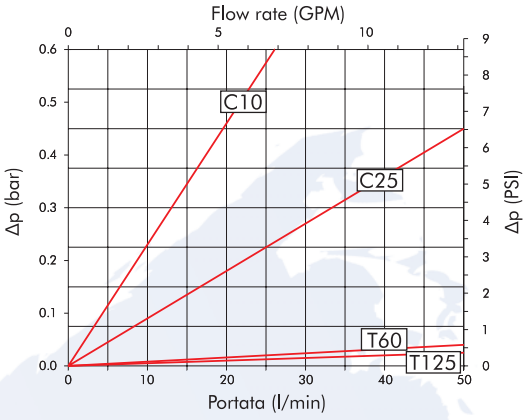

R-1-11

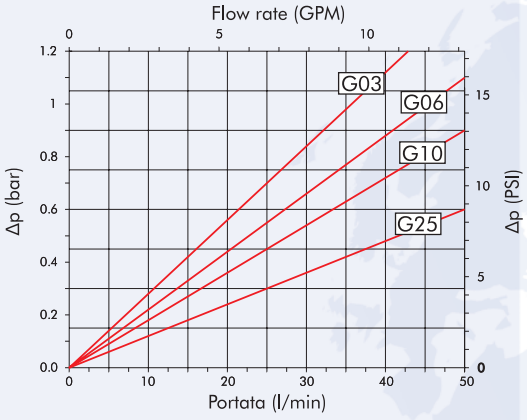

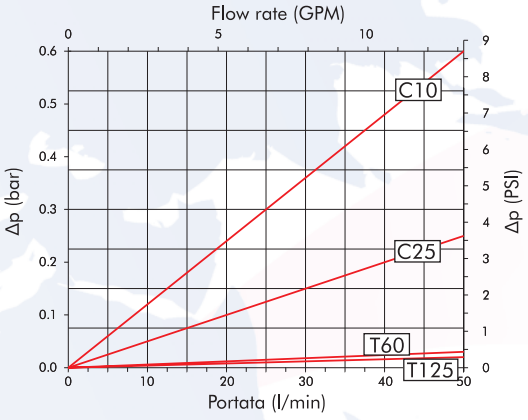

R-1-20

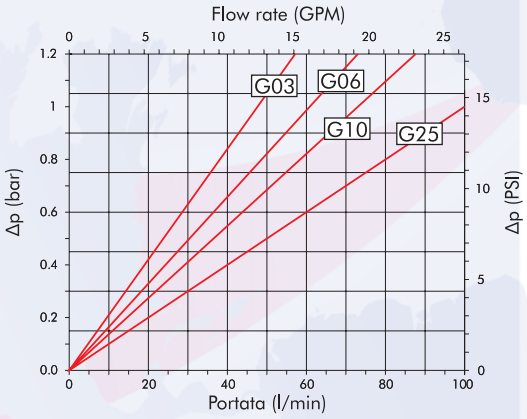

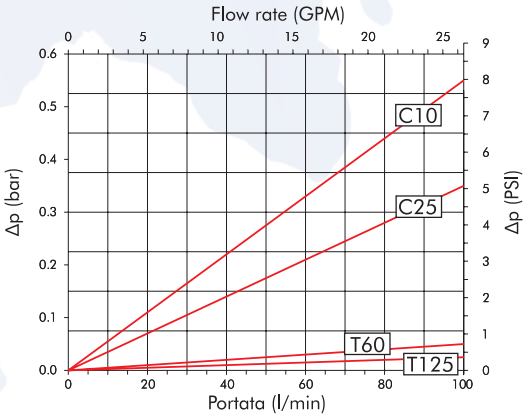

R-1-22

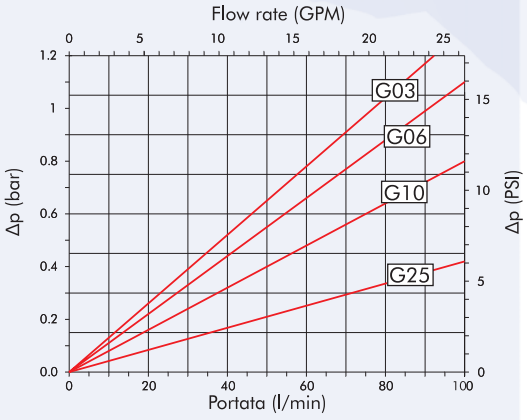

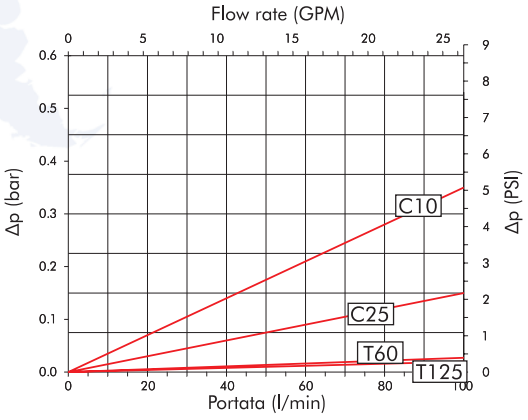

R-1-30

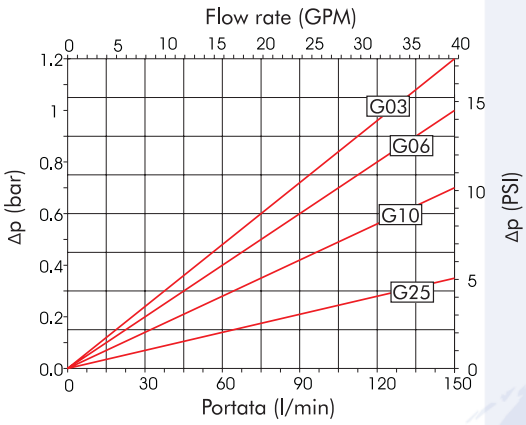

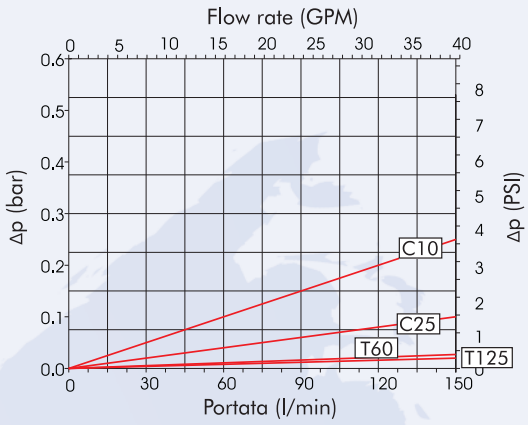

R-1-40

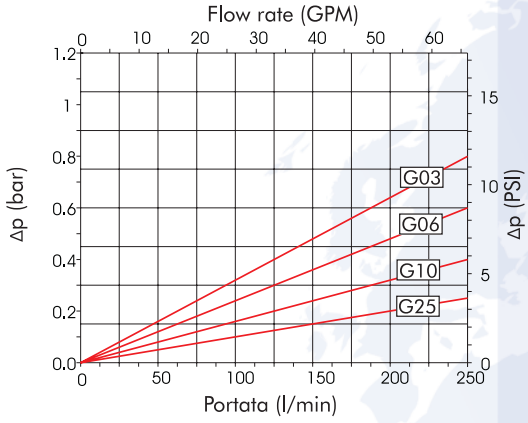

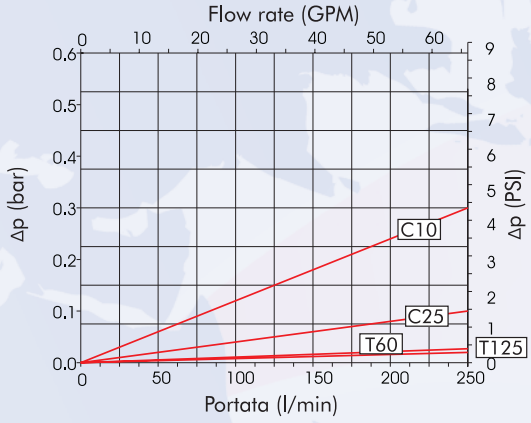

R-1-43

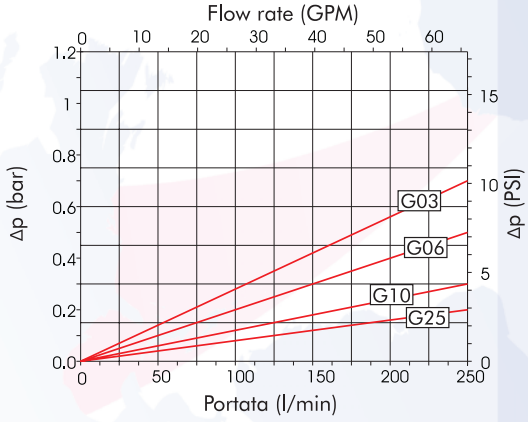

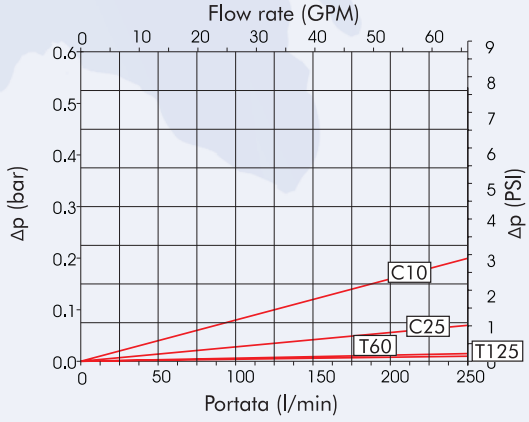

R-1-50

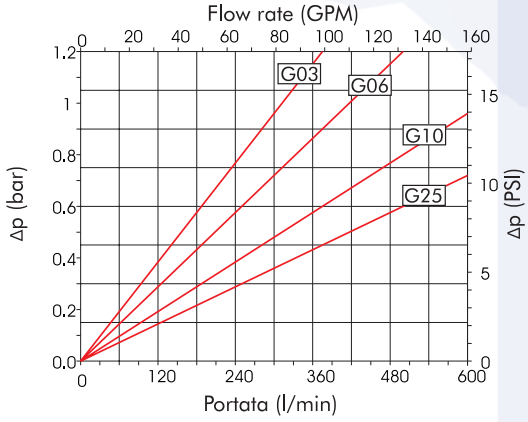

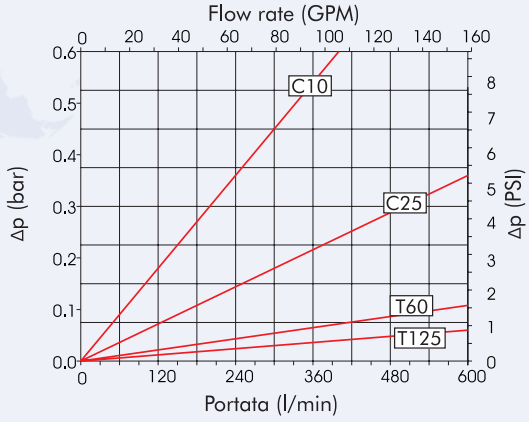

50% OFF ALL PRICES

R-1-51

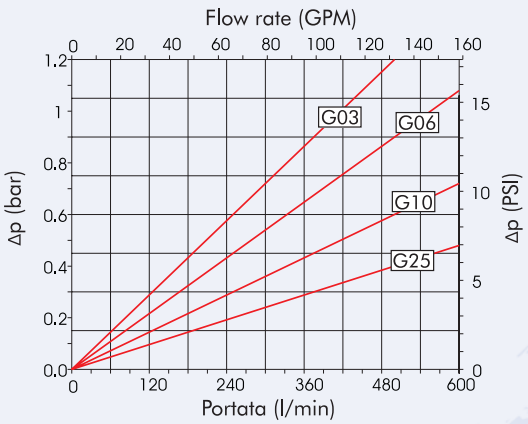

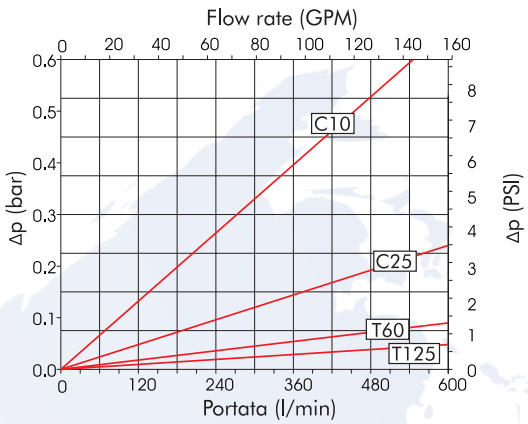

R-1-60

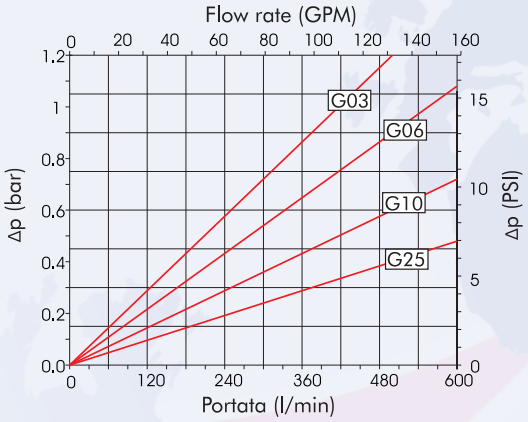

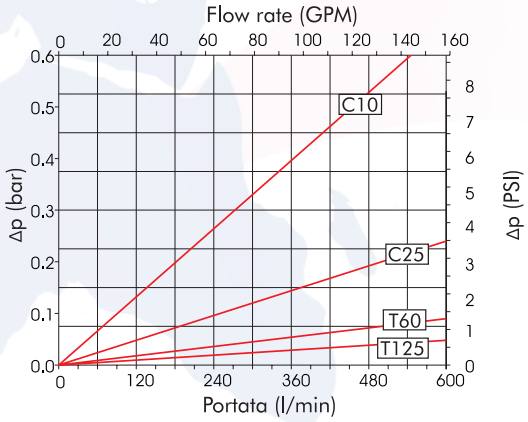

R-1-64

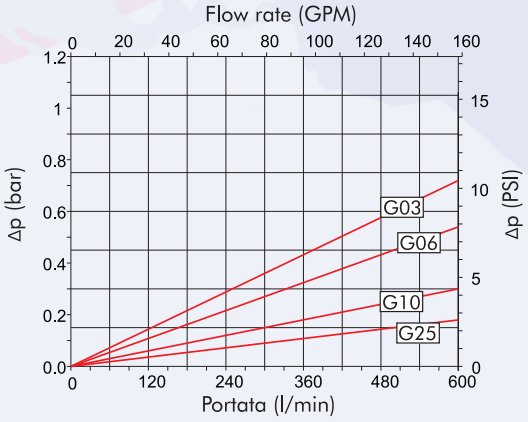

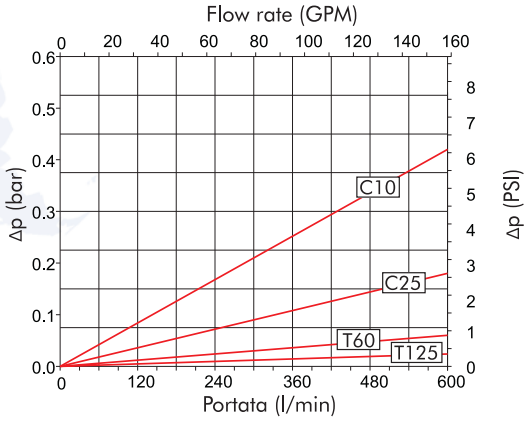

FILTRAZIONE IDRAULICA
HYDRAULIC FILTRATION

FILTREC®
Technical Filtration

serie
FR-8

50% OFF ALL PRICES

Serie FR-8

Filtri sul ritorno
Return filter

FILTER HOUSING

Technical Information

Description:	*Tank top mounting design return line with reusable or disposable element.*
Max flow rate:	*150 l/min (40 gpm)*
Max working pressure:	*As per NFPA T 3.10.5.1: 8 Bar (116 psi)*
Test pressure:	*As per NFPA T 3.10.5.1: 12 Bar (174 psi)*
Burst pressure:	*As per NFPA T 3.10.5.1: 16 Bar (232 psi)*
Connection Ports:	*BSP, NPT, SAE J514b*
Indicator:	*Visual and electrical.*
Working temperature:	*-25°C +100°C (-13°F +212°F)*
Materials:	• *Cover: nylon* • *Head: aluminium* • *Bowl: nylon* • *Seal: Buna-N / Viton®*
Fluids compatibility:	*ISO 2943: Filter assembly compatible with mineral oils and some synthetic or vegetable oils. With other fluid applications please contact Filtrec S.p.A.*

FILTER ELEMENT

Filter media:	*Microglass fiber 3,6,10,25 µm* *Cellulose 10,25 µm* *Wire mesh 60, 125 µm*
Collapse pressure:	*As per ISO 2941: 10 Bar (145 psi)*
By-pass:	*Return line 1,7 Bar (24.6 psi)*

DESCRIPTION	ORDER CODE	PORTS	FLOW RATE	PRICE	ELEMENT	PRICE
ALL WITH AIR BREATHER AS STANDARD - R1 INDICATOR ON TOP						
10 MICRON CELLULOSE						
FR-8-10-C10-B-B4-O-10-C-R1	ZZ004873	3/4" BSP	16 L/MIN	£82.21	R110C10B	£12.19
FR-8-11-C10-B-B4-O-10-C-R1	ZZ004874	3/4" BSP	24 L/MIN	£95.28	R111C10B	£28.52
FR-8-20-C10-B-B6-O-10-C-R1	ZZ004875	1 1/4" BSP	50 L/MIN	£111.17	R120C10B	£14.19
FR-8-22-C10-B-B6-O-10-C-R1	ZZ004876	1 1/4" BSP	80 L/MIN	£113.97	R122C10B	£15.80
FR-8-30-C10-B-B6-O-10-C-R1	ZZ004877	1 1/4" BSP	120 L/MIN	£128.76	R130C10B	£21.20
25 MICRON CELLULOSE						
FR-8-10-C25-B-B4-O-10-C-R1	ZZ004878	3/4" BSP	32 L/MIN	£82.21	R110C25B	£12.19
FR-8-11-C25-B-B4-O-10-C-R1	ZZ004879	3/4" BSP	48 L/MIN	£95.28	R111C25B	£28.52
FR-8-20-C25-B-B6-O-10-C-R1	ZZ004880	1 1/4" BSP	80 L/MIN	£111.17	R120C25B	£14.19
FR-8-22-C25-B-B6-O-10-C-R1	ZZ004881	1 1/4" BSP	100 L/MIN	£113.97	R122C25B	£15.80
FR-8-30-C25-B-B6-O-10-C-R1	ZZ004882	1 1/4" BSP	140 L/MIN	£128.77	R130C25B	£27.13

THE GIVEN FLOW RATE VALUES REFER TO APPLICATIONS WITH MINERAL OIL HAVING VISCOSITY OF 30 CST AT WORKING TEMPERATURE. FOR APPLICATIONS WITH DIFFERENT FLUID OR WORKING CONDITIONS, A CORRECTIVE FACTOR MUST BE APPLIED BY REFERING TO THE TECHNICAL INFORMATION.

OPTIONAL EXTRAS

VITON SEALS	PRICE
FR-8-10 SERIES	£25.91
FR-8-20 & 8-30 SERIES	£9.94
SECONDARY PORT	
FR-8-10 SERIES	
FR-8-20 & 8-30 SERIES	£4.58
INDICATOR POSITION	
OPTIONS C,D & S	£5.13
INDICATORS	
R2 PRESSURE SWITCH O.C 1.3 BAR 18.85 O.C	£27.98
R3 PRESSURE SWITCH C.C 1,3 BAR 18.85 PSI C.C	£27.56
R6 VISUUAL PRESSURE 1.2 BAR 17.4 PSI	£34.60
R7 PRESSURE VACUUM GAUGE -1 - 5 BAR -14.5-72.5 PSI	£9.67

Informazioni dimensionali - *Overall dimensions*

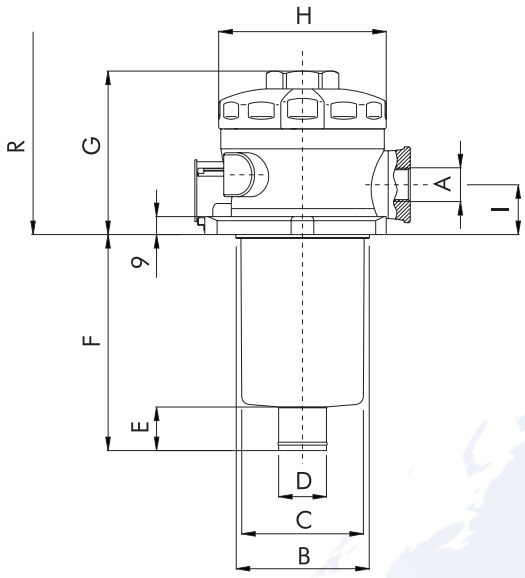

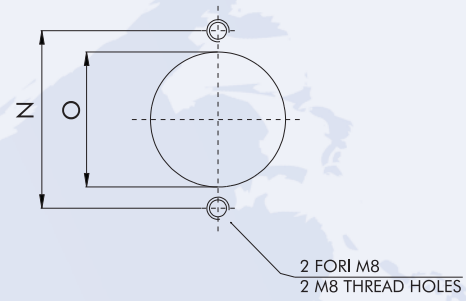

① POSIZIONE INGRESSO SECONDARIO (Q)
SECOND PORT OPTION (Q)

② POSIZIONE INDICATORE
INDICATOR PORT 1/8" BSP

③ FILTRO SFIATO
AIR BREATHER

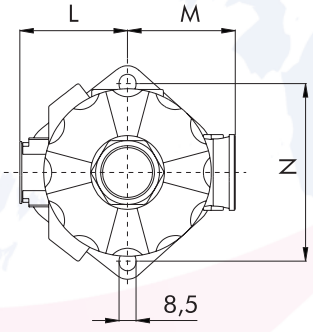

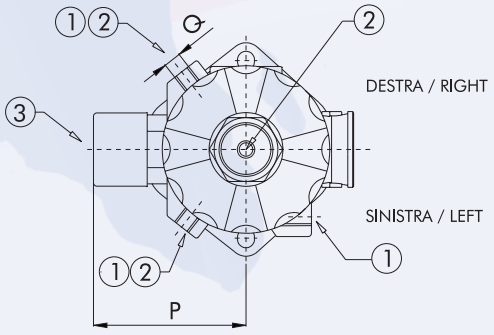

1) Grandezza nominale - *Nominal size*

Codice Code	A	B	C	D	E	F	G	H	I	L	M	N	O	P	Q	R	Cart. ricambio Element
FR-8-10	3/8" - 1/2" - 3/4" BSP 3/8" - 1/2" - 3/4" NPT 9/16"-18 UNF - SAE J514b	67	62	24	23	79	81	84	25	55	54	89 ± 1	68	73	---	150	R-1-10
FR-8-11	3/4"-16 UNF - SAE J514b 1 1/16"-12 UN-SAE J514b	67	62	24	23	148	81	84	25	55	54	89 ± 1	68	73	---	220	R-1-11
FR-8-20	1/2" - 3/4"- 1" - 1 1/4" BSP 1/2" - 3/4"- 1"- 1 1/4" NPT 3/4"-16 UNF - SAE J514b	86	80,5	27,5	30	103	107	110	40	67	68	115 ± 1	87	94	3/8" - 1/2" BSP 3/8" - 1/2" NPT	190	R-1-20
FR-8-22	1 1/16"-12 UN-SAE J514b 1 5/16"-12 UN-SAE J514b 1 5/8"-12 UN-SAE J514b	86	80,5	27,5	30	148	107	110	40	67	68	115 ± 1	87	94	9/16"-18 UN - SAE J514b 3/4"-16 UN - SAE J514b	230	R-1-22
FR-8-30	3/4" - 1"- 1 1/4" BSP 3/4" - 1"- 1 1/4" NPT 1 1/16"-12 UN-SAE J514b 1 5/16"-12 UN-SAE J514b 1 5/8"-12 UN-SAE J514b	86	80,5	40	30	229	107	110	40	67	68	115 ± 1	87	94	3/8" - 1/2" BSP 3/8" - 1/2" NPT 9/16"-18 UN - SAE J514b 3/4"-16 UN - SAE J514b	310	R-1-30

50% OFF ALL PRICES

2) Grado di filtrazione - *Filtration ratings*

Codice - *Code*	Materiale - *Media*	Efficienza - *Efficiency*
0	senza cartuccia / *no element*	------
G03	microfibra inorganica / *microglass fiber*	$\beta_{4,5\ \mu m\ (c)} \geq 1000$
G06	microfibra inorganica / *microglass fiber*	$\beta_{7\ \mu m\ (c)} \geq 1000$
G10	microfibra inorganica / *microglass fiber*	$\beta_{12\ \mu m\ (c)} \geq 1000$
G25	microfibra inorganica / *microglass fiber*	$\beta_{27\ \mu m\ (c)} \geq 1000$
C10	carta trattata / *resin impregnated cellulose*	$\beta_{10\ \mu m\ (c)} \geq 2$
C25	carta trattata / *resin impregnated cellulose*	$\beta_{25\ \mu m\ (c)} \geq 2$
T60	tela metallica / *wire mesh*	------
T125	tela metallica / *wire mesh*	------

3) Guarnizioni - *Seals*

Codice - *Code*	Tipo - *Type*
---	NBR
V	Viton®

4) Connessioni - *Connection port*

Codice - *Code*	Connessione - *Connection*
B2	3/8″ BSP
B3	1/2″ BSP
B4	3/4″ BSP
B5	1″ BSP
B6	1 1/4″ BSP
N2	3/8″ NPT
N3	1/2" NPT
N4	3/4″ NPT
N5	1″ NPT
N6	1 1/4″ NPT
R2	9/16″ - 18 UNF-2B SAE J514b
R3	3/4″ - 16 UNF-2B SAE J514b
R4	1 1/16″ - 12 UN-2B SAE J514b
R5	1 5/16″ - 12 UN-2B SAE J514b
R6	1 5/8″ - 12 UN-2B SAE J514b

5) Posizione ingressi secondari
Second port position

Codice - *Code*	Posizione - *Position*
0	senza - *without*
S	sinistra - *left*
D	destra - *right*

6) Ingressi secondari
Second port connection

Codice - *Code*	Connessione - *Connection*
B2	3/8″ BSP
B3	1/2″ BSP
N2	3/8″ NPT
N3	1/2" NPT
R2	9/16″ - 18 UNF-2B SAE J514b
R3	3/4″ - 16 UNF-2B SAE J514b

7) Sfiato aria - *Air Breather*

Codice - *Code*	Micronaggio - *Micron rating*
0	senza / *without*
10	10µm carta trattata *10 µm resin impregnated cellulose*
40	40µm carta trattata *40 µm resin impregnated cellulose*

8) Posizione indicatore
Indicator position

Codice - *Code*	Posizione - *Position*
0	senza / *without*
C	coperchio / *cover*
D	destra / *right*
S	sinistra / *left*

9) Indicatori - *Indicators*

Codice - *Code*	Tipo indicatore - *Indicator type*	Taratura - *Setting*
0	senza / *without*	
R1	manometro scala *pressure gauge indicator scale*	0÷10 Bar *0÷145 psi*
R2	pressostato n.a. taratura *pressure switch O.C.*	1,3 Bar *18,85 psi O.C.*
R3	pressostato n.c. taratura *pressure switch C.C.*	1,3 Bar *18,85 psi C.C.*
R6	pressostato visivo *visual pressure*	1,2 Bar *17,4 Psi*
R7	manovuotometro taratura *pressure vacuum gauge*	-1÷5 Bar *-14,5÷72,5 Psi*

Codici per l'ordinazione - *Ordering information*

Filtro completo
Filter assembly

FR-8

20	C10	B	V	B3	S	B2	40	C	R1
1*	2*		3*	4*	5*	6*	7*	8*	9*

Cartuccia
Filter element

R-1

20	C10	B	V
1*	2*		3*

* Viton® è un marchio registrato da DuPont - *Viton® is a registered trademark of DuPont*
Sono possibili variazioni al catalogo senza preavviso - *Catalogue may change without notice*

50% OFF ALL PRICES

Curve di portata - *Pressure drop charts*

Le curve (secondo ISO 3968 classe B) sono ottenute con olio minerale avente viscosità di 30 cSt e densità di 0,86 Kg/dm³.
Per viscosità e densità diverse i dati variano.
Il numero relativo alla curva di portata è riferito all'attacco del filtro; es.: 2 indica attacco B2 o N2.

Pressure drop charts (as per ISO 3968 class B) are obtained using mineral oil with 30 cSt viscosity and 0,86 Kg/dm³ density.
With different values of viscosity and density data may vary.
The numbers indicate connection of the filters: i.e. 2 means B2 or N2 connections.

FR-8-10 / 11

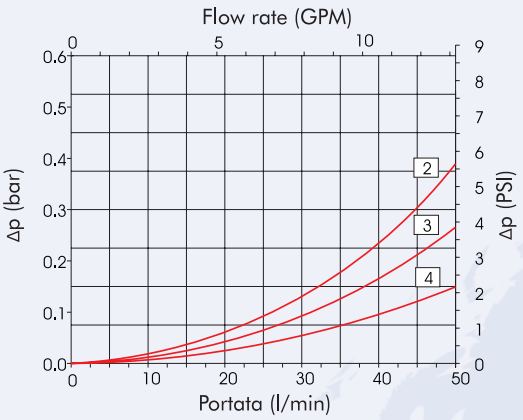

FR-8-20 / 22

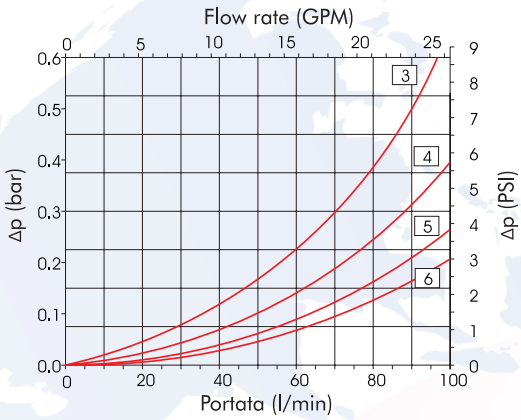

FR-8-30

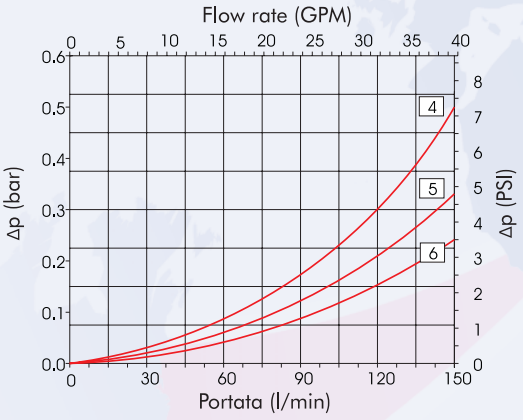

R-1-10

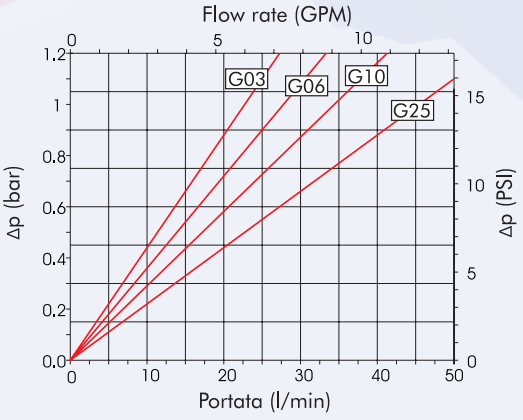

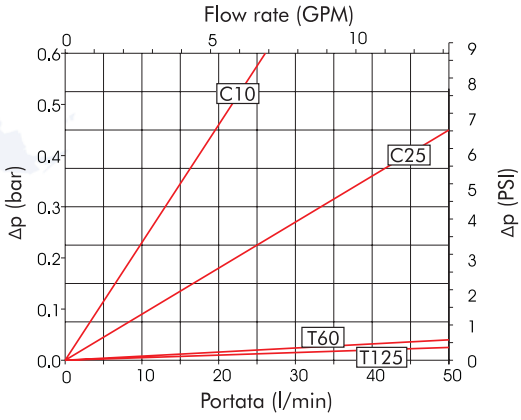

R-1-11

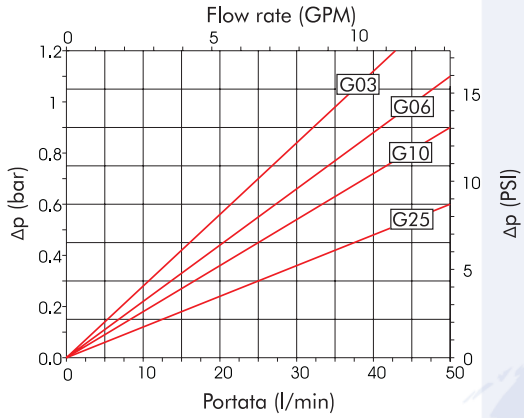

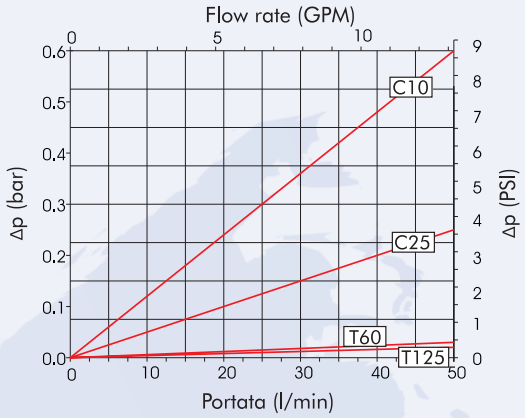

R-1-20

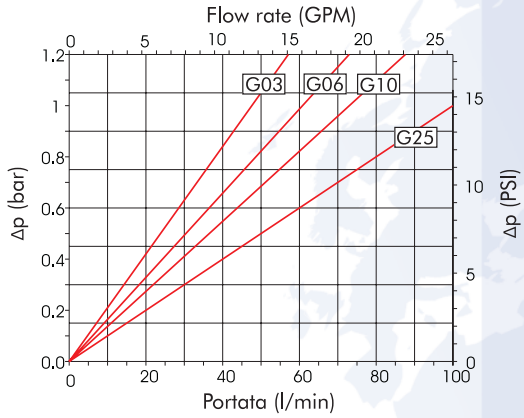

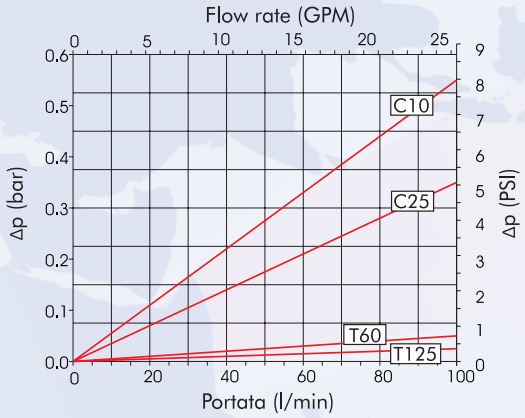

R-1-22

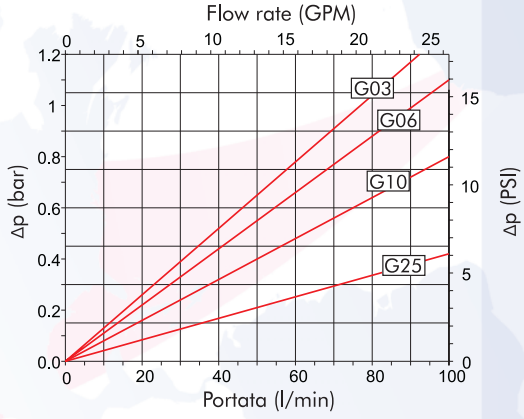

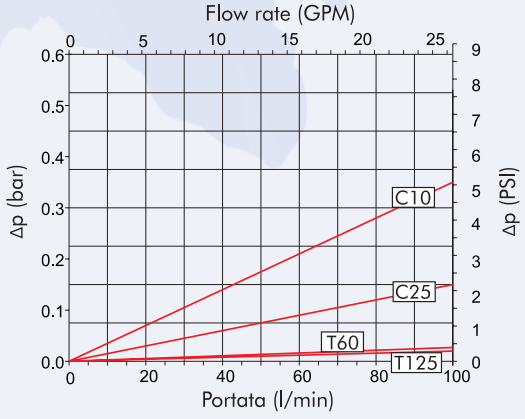

R-1-30

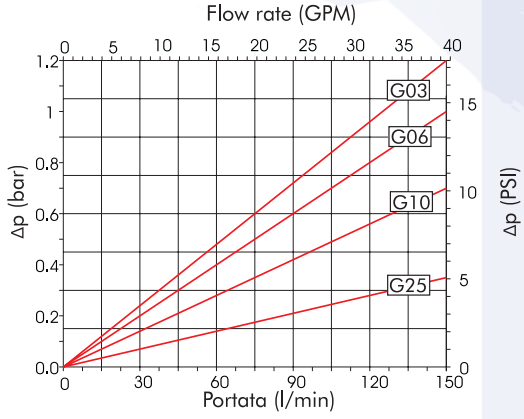

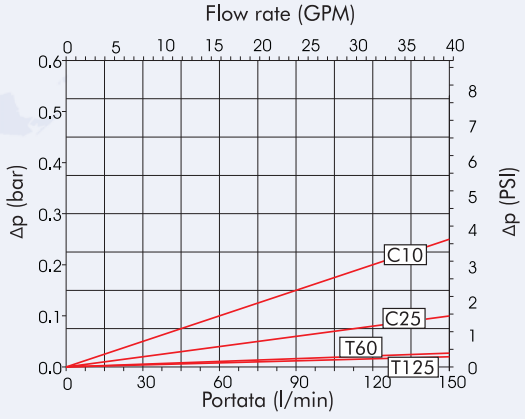

50% OFF ALL PRICES

FILTRAZIONE IDRAULICA
HYDRAULIC FILTRATION

FILTREC®
Technical Filtration

serie FA-4

Serie FA-4

Filtri avvitabili
Spin-on filter

FILTER HOUSING

Technical Information

Description: *In line pressure and return spin-on filter assemblies.*

Max flow rate: *200 l/min (53 gpm)*

Max working pressure:

FA-4-1x	FA-4-21
500 psi	348 psi
754 psi	522 psi
1.000 psi	798 psi
0-500 psi *	0-348 psi *

* ≥ 100.000 cycles

Test pressure: *As per NFPA T 3.10.17*

Burst pressure: *As per NFPA T 3.10.17*

Pressure fatigue test: *As per NFPA T 3.10.17*

Connection Ports: *BSP, NPT*

By-pass setting: *3,5 Bar (50 psi)*

Indicator: *Visual and electrical*

Working temperature: *-25°C +120°C (-13°F +248°F)*

Materials:

- *Head: aluminium*
- *Housing: carbon steel + aluminium*
- *Seal: Buna-N (NBR) / Viton®*

Fluids compatibility: *ISO 2943: Filter assembly compatible with mineral oils and some synthetic or vegetable oils. With other fluid applications please contact Filtrec S.p.A.*

FILTER ELEMENT

Filter media: *Microglass fiber 3, 6, 10, 15, 25, 40 µm*
Cellulose 10, 25 µm
Wire mesh 150 µm

Collapse pressure: *As per ISO 2941*

FA-4-1x	FA-4-21
15 Bar	12 Bar

DESCRIPTION	ORDER CODE	PORTS	FLOW RATE	PRICE	ELEMENT	PRICE
10 MICRON CELLULOSE						
FA-4-05-C10-B4-D-Z34	ZZ004883	3/4" BSP	50 L/MIN	£130.91	A405C10	£58.30
FA-4-11-C10-B4-D-Z34	ZZ004884	3/4" BSP	60 L/MIN	£130.37	A411C10	£72.25
FA-4-12-C10-B5-D-Z34	ZZ004885	1" BSP	100 L/MIN	£136.10	A412C10	£75.31
FA-4-13-C10-B5-D-Z34	ZZ004886	1" BSP	100 L/MIN	£136.40	A413C10	£82.15
FA-4-21-C10-B6-D-Z34	ZZ004887	1 1/4" BSP	160 L/MIN	£177.43	A421C10	£119.40
10 MICRON FIBREGLASS						
FA-4-05-G10-B4-D-Z34	ZZ004888	3/4" BSP	40 L/MIN	£130.10	A405G10	£71.82
FA-4-11-G10-B4-D-Z34	ZZ004889	3/4" BSP	50 L/MIN	£132.88	A411G10	£76.37
FA-4-12-G10-B5-D-Z34	ZZ004890	1" BSP	80 L/MIN	£136.72	A412G10	£82.68
FA-4-13-G10-B5-D-Z34	ZZ004891	1" BSP	100 L/MIN	£140.69	A413G10	£89.20
FA-4-21-G10-B6-D-Z34	ZZ004892	1 1/4" BSP	120 L/MIN	£185.66	A421G10	£132.92
25 MICRON FIBREGLASS						
FA-4-05-G25-B4-D-Z34	ZZ004893	3/4" BSP	50 L/MIN	£129.95	A405G25	£71.82
FA-4-11-G25-B4-D-Z34	ZZ004894	3/4" BSP	60 L/MIN	£132.01	A411G25	£76.36
FA-4-12-G25-B5-D-Z34	ZZ004895	1" BSP	100 L/MIN	£136.72	A412G25	£77.23
FA-4-13-G25-B5-D-Z34	ZZ004896	1" BSP	100 L/MIN	£139.15	A413G25	£86.64
FA-4-21-G25-B6-D-Z34	ZZ004897	1 1/4" BSP	160 L/MIN	£182.82	A421G25	£128.27

THE GIVEN FLOW RATE VALUES REFER TO APPLICATIONS WITH MINERAL OIL HAVING VISCOSITY OF 30 CST AT WORKING TEMPERATURE. FOR APPLICATIONS WITH DIFFERENT FLUID OR WORKING CONDITIONS, A CORRECTIVE FACTOR MUST BE APPLIED BY REFERING TO THE TECHNICAL INFORMATION.

OPTIONAL EXTRAS

INDICATORS	PRICE
Z35 DIFFERENTIAL ELECTRICAL SWITCH 2.7 BAR 39 PSI	£4.66

50% OFF ALL PRICES

Informazioni dimensionali - *Overall dimensions*

FA-4-1x
FA-4-21

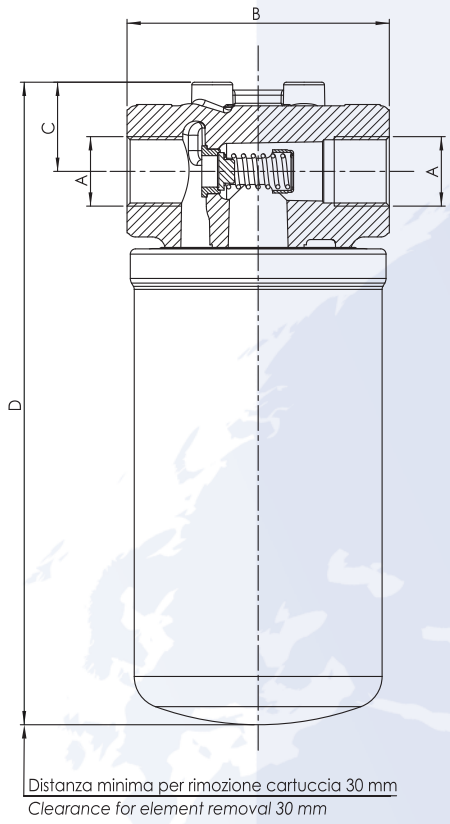

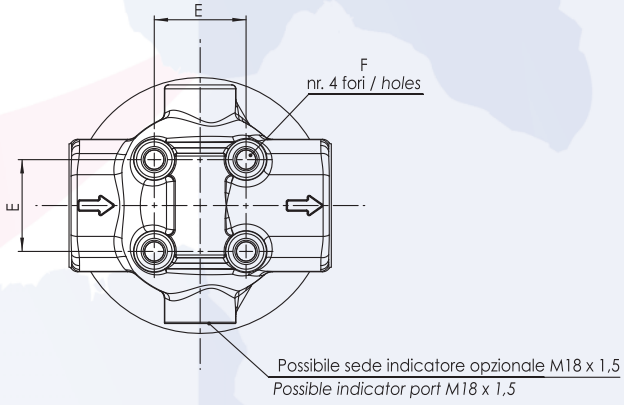

1) Grandezza nominale - *Nominal size*

Codice - *Code*	A	B	C	D	E	Cart. ricambio *Element*
FA-4-05	3/4″ BSP 3/4″ NPT 1″ BSP 1″ NPT	100	34	165	35	**A-4-05**
FA-4-11				216		**A-4-11**
FA-4-12				245		**A-4-12**
FA-4-13				302		**A-4-13**
FA-4-21	1″ 1/4 BSP 1″ 1/4 NPT	121	40	369	48	**A-4-21**

2) Dimensioni cartucce - *Element size*

Codice - *Code*	A	B	C
A-4-05	97	1" 3/8-12 UN 2B	100
A-4-11	97	1" 3/8-12 UN 2B	152
A-4-12	97	1" 3/8-12 UN 2B	180
A-4-13	97	1" 3/8-12 UN 2B	240
A-4-21	120	1" 3/4-12 UN 2B	295

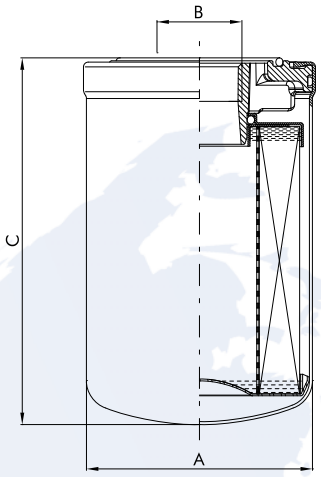

3) Grado di filtrazione - *Filtration ratings*

Codice - *Code*	Materiale - *Media*	Efficienza - *Efficiency*
0	senza cartuccia / *no element*	------
G03	microfibra inorganica / *microglass fiber*	$\beta_{4,5\ \mu m\ (c)} \geq 1000$
G06	microfibra inorganica / *microglass fiber*	$\beta_{7\ \mu m\ (c)} \geq 1000$
G10	microfibra inorganica / *microglass fiber*	$\beta_{12\ \mu m\ (c)} \geq 1000$
G15	microfibra inorganica / *microglass fiber*	$\beta_{18\ \mu m\ (c)} \geq 1000$
G25	microfibra inorganica / *microglass fiber*	$\beta_{27\ \mu m\ (c)} \geq 1000$
C10	carta trattata / *resin impregnated cellulose*	$\beta_{10\ \mu m\ (c)} \geq 2$
C25	carta trattata / *resin impregnated cellulose*	$\beta_{25\ \mu m\ (c)} \geq 2$
T150	tela metallica / *wire mesh*	------

4) Guarnizioni - *Seals*

Codice - *Code*	Tipo - *Type*
---	NBR
V	Viton®

5) Connessioni - *Connection port*

Codice - *Code*	B	F
B4	3/4" BSP	M10
B5	1" BSP	M10
B6	1" 1/4 BSP	M10
N4	3/4" NPT	3/8"-16 UNC
N5	1" NPT	3/8"-16 UNC
N6	1" 1/4 NPT	3/8"-16 UNC

Per NPT contattare l'ufficio commerciale
For NPT please contact sales department

6) Valvola di by-pass - *By-pass valve*

Codice - *Code*	Taratura - *Setting*
0	senza / *without*
D	ritorno o in linea / *return or in-line* (3,5 Bar - *50 psi*)

50% OFF ALL PRICES

7) Indicatori - *Indicator*

Codice - *Code*	Tipo indicatore - *Indicator type*	Taratura - *Setting*
0	senza / *without*	
Z34	differenziale visivo *differential visual switch*	2,7 Bar *39 psi*
Z35	differenziale elettrico *differential electric switch*	2,7 Bar *39 psi*

Codici per l'ordinazione - *Ordering information*

Filtro completo
Filter assembly

FA-4	**21**	**C10**	**V**	**B6**	**D**	**Z34**
	1*	3*	4*	5*	6*	7*

Cartuccia
Filter element

A-4	**21**	**C10**	**V**
	2*	3*	4*

Filtro *Housing*

Curve di portata - *Pressure drop charts*

Le curve (secondo ISO 3968 classe B) sono ottenute con olio minerale avente viscosità di 30 cSt e densità di 0,86 Kg/dm³. Per viscosità e densità diverse i dati variano.

Pressure drop charts (as per ISO 3968 class B) are obtained using mineral oil with 30 cSt viscosity and 0,86 Kg/dm³ density. With different values of viscosity and density data may vary.

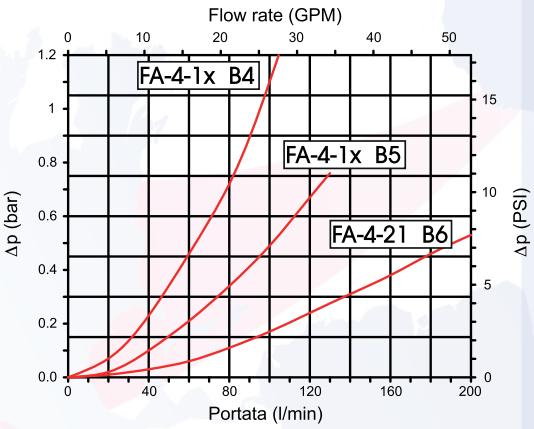

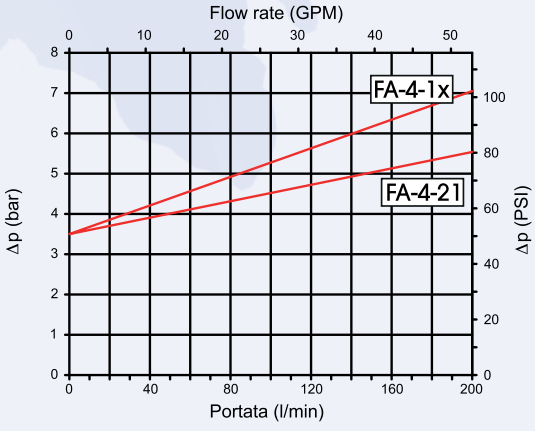

A-4-05

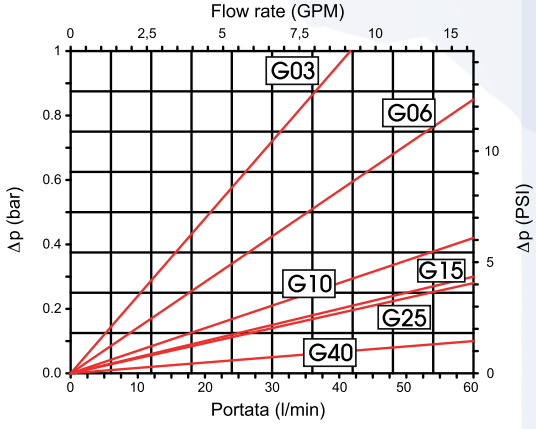

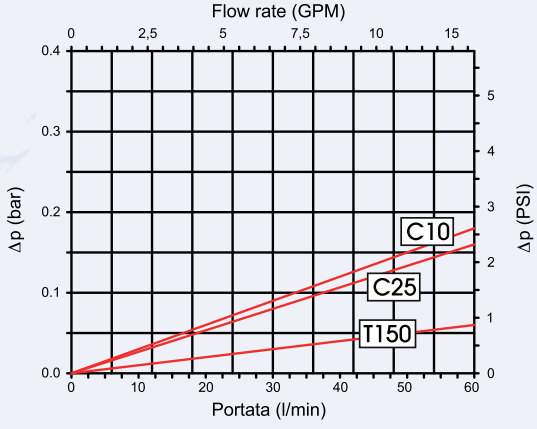

A-4-11

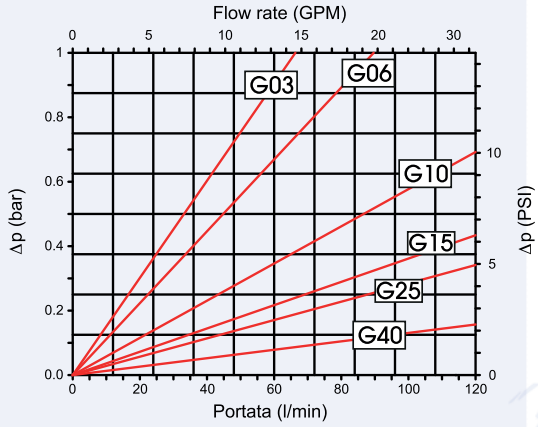

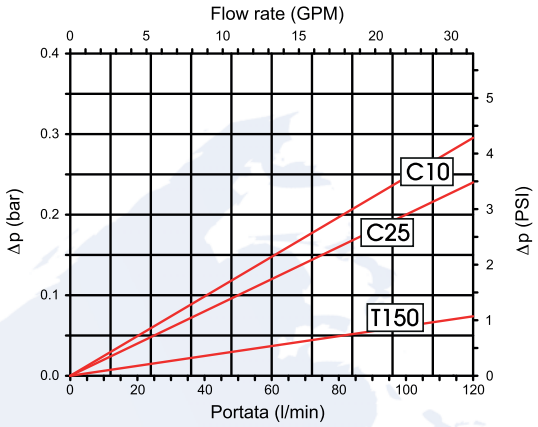

A-4-12

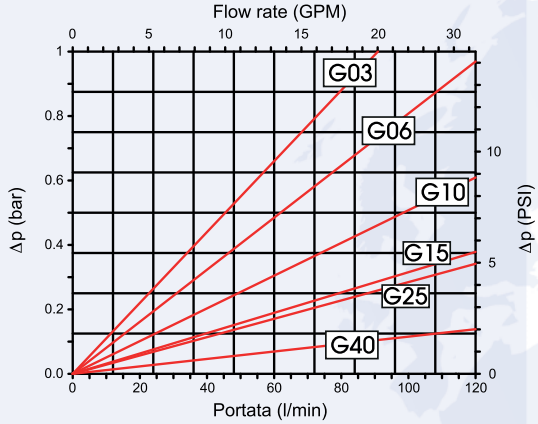

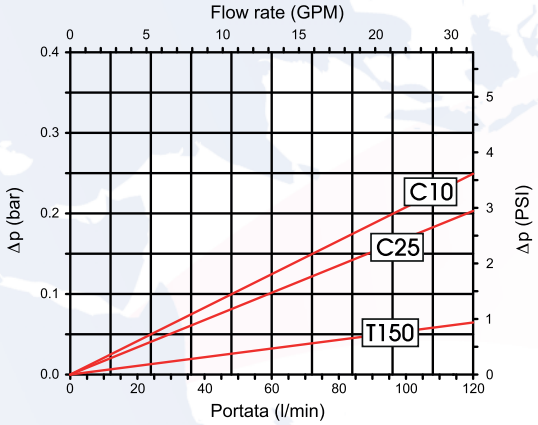

A-4-13

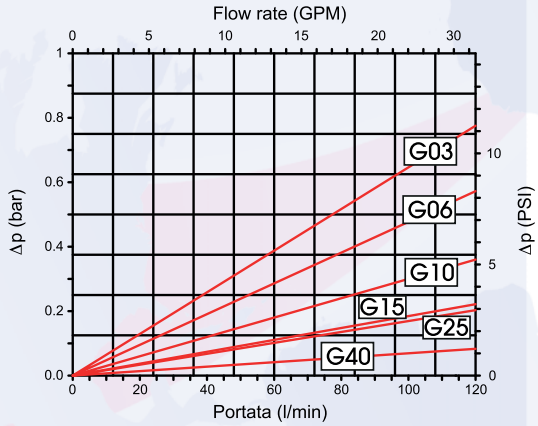

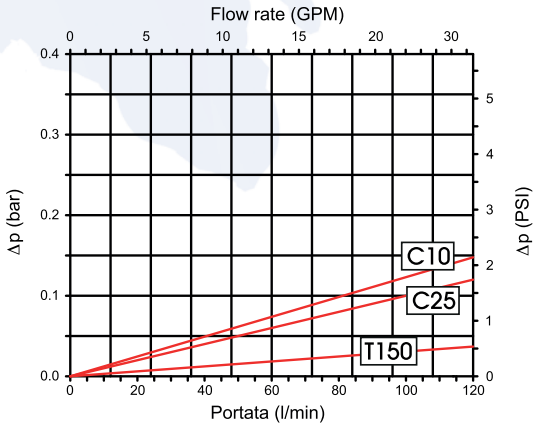

A-4-21

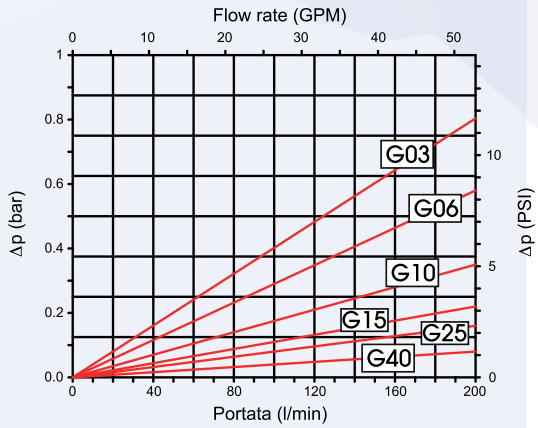

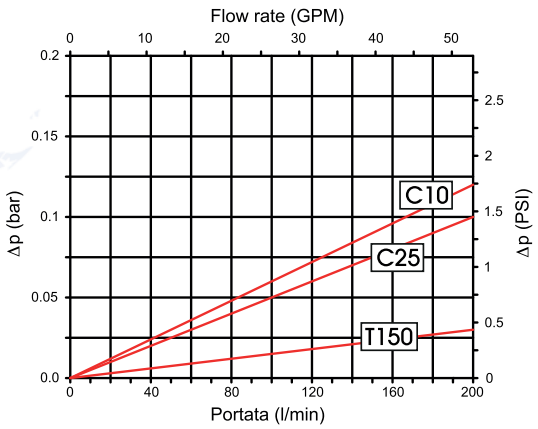

50% OFF ALL PRICES

SUCTION FILTERS

FA-1 SUCTION SPIN-ON 688
FS-1 SUCTION STRAINERS 694
FS-7 IN TANK MOUNTED SUCTION STRAINERS 699

FLOWFIT®

FILTRAZIONE IDRAULICA
HYDRAULIC FILTRATION

FILTREC®
Technical Filtration

serie FA-1 SUCTION

50% OFF ALL PRICES

Serie FA-1

Filtri avvitabili
Spin-on filter

FILTER HOUSING

Technical Information

Description:	*In line low-pressure spin-on filter assemblies, suction and return lines.*
Max flow rate:	*300 l/min (79 gpm)*
Max working pressure:	*As per NFPA T 3.10.17: 12 Bar (175 psi)*
Test pressure:	*As per NFPA T 3.10.17: 15 Bar (217.5 psi)*
Burst pressure:	*As per NFPA T 3.10.17: 20 Bar (290 psi)*
Connection Ports:	*BSP*
By-pass setting:	*suction line 0,25 Bar (3.6 psi) return line 1,7 Bar (24.6 psi)*
Indicator:	*Visual and electrical*
Working temperature:	*-25°C +120°C (-13°F +248°F)*
Materials:	*• Head: aluminium* *• Housing: carbon steel* *• Seal: Buna-N*
Fluids compatibility:	*ISO 2943: Filter assembly compatible with mineral oils and some synthetic or vegetable oils. With other fluid applications please contact Filtrec S.p.A.*

FILTER ELEMENT

Filter media:	*Microglass fiber 3,6,10,25 µm* *Cellulose 10,25 µm* *Wire mesh 60, 125 µm*
Collapse pressure:	*as per ISO 2941: 4 Bar (58 psi)*

DESCRIPTION	ORDER CODE	PORTS	FLOW RATE	PRICE	ELEMENT	PRICE
SUPPLIED WITH VACUUM GAUGE INDICATOR AND BYPASS VALVE						
60 MICRON WIREMESH						
FA-1-10-T60-B4-S-S1	ZZ004898	3/4" BSP	30 L/MIN	£90.35	A110T60	£29.68
FA-1-11-T60-B4-S-S1	ZZ004899	3/4" BSP	35 L/MIN	£92.22	A111T60	£56.18
FA-1-20-T60-B6-S-S1	ZZ004900	1 1/4" BSP	95 L/MIN	£124.02	A120T60	£49.82
FA-1-21-T60-B6-S-S1	ZZ004901	1 1/4" BSP	100 L/MIN	£134.62	A121T60	£84.80
FA-1-30-T60-B7-S-S1 * 2 ELEMENTS	ZZ004902	1 1/2" BSP	150 L/MIN	£156.88	A120T60	£49.82
FA-1-31-T60-B7-S-S1 * 2 ELEMENTS	ZZ004903	1 1/2" BSP	150 L/MIN	£168.54	A121T60	£84.80
FA-1-40-T60-B7-S-S1 * 2 ELEMENTS	ZZ004904	1 1/2" BSP	150 L/MIN	£410.75	A120T60	£74.20
125 MICRON WIREMESH						
FA-1-10-T125-B4-S-S1	ZZ004905	3/4" BSP	30 L/MIN	£67.84	A110T125	£27.56
FA-1-11-T125-B4-S-S1	ZZ004906	3/4" BSP	35 L/MIN	£100.78	A111T125	£63.60
FA-1-20-T125-B6-S-S1	ZZ004907	1 1/4" BSP	95 L/MIN	£92.22	A120T125	£49.82
FA-1-21-T125-B6-S-S1	ZZ004908	1 1/4" BSP	100 L/MIN	£127.20	A121T125	£77.38
FA-1-30-T125-B7-S-S1 * 2 ELEMENTS	ZZ004909	1 1/2" BSP	150 L/MIN	£156.88	A120T125	£49.82
FA-1-31-T125-B7-S-S1 * 2 ELEMENTS	ZZ004910	1 1/2" BSP	150 L/MIN	£287.94	A121T125	£84.80
FA-1-40-T125-B7-S-S1 * 2 ELEMENTS	ZZ004911	1 1/2" BSP	150 L/MIN	£446.51	A120T125	£74.20

THE GIVEN FLOW RATE VALUES REFER TO APPLICATIONS WITH MINERAL OIL HAVING VISCOSITY OF 30 CST AT WORKING TEMPERATURE. FOR APPLICATIONS WITH DIFFERENT FLUID OR WORKING CONDITIONS, A CORRECTIVE FACTOR MUST BE APPLIED BY REFERING TO THE TECHNICAL INFORMATION.

OPTIONAL EXTRAS

INDICATORS	PRICE
S2 VACUUM SWITCH -0.2 BAR SETTING O.C. (-2.9 PSI)	£39.94
S3 VACUUM SWITCH 0.2 BAR SETTING C.C. (-2.9 PSI)	£33.75
S4 VACUUM SWITCH VIEW -0.3 BAR SETTING (-4.35 PSI)	£19.08

Informazioni dimensionali - *Overall dimensions*

FA-1-10/11

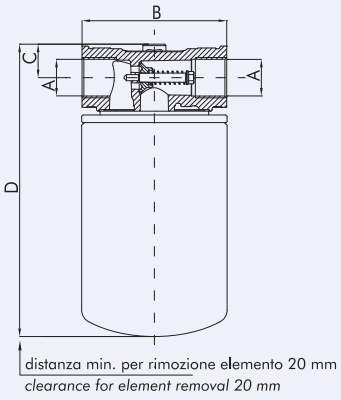

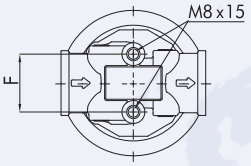

FA-1-20/21

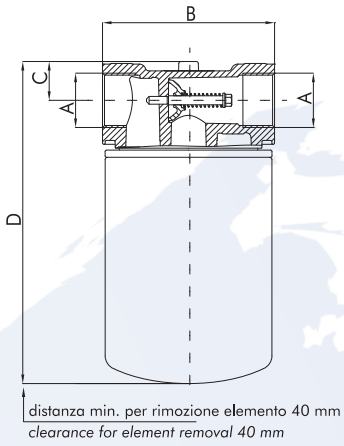

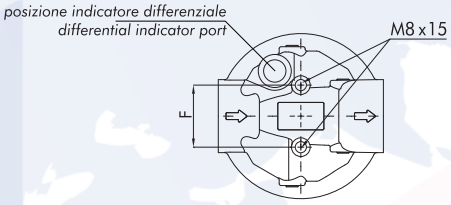

Solo su richiesta (Contattate il nostro ufficio commerciale) - ***Only on request*** *(Please contact our sales department)*

Connessioni IN/OUT IN/OUT Connection	Connessione cartuccia *Filter element connection*	Fori di fissaggio *Mounting holes*
1" BSP	3/4"BSP	M8
3/4" NPT	1"-12 UNF	1/4"-20 UNC
1" NPT		
1"1/16-12 UNF		

Connessioni IN/OUT IN/OUT Connection	Connessione cartuccia *Filter element connection*	Fori di fissaggio *Mounting holes*
1"1/4 NPT	1"1/4 BSP 1"1/2-16 UNF	5/16"-18-UNC-2B
1"5/8-12-UNF		

FA-1-30/31

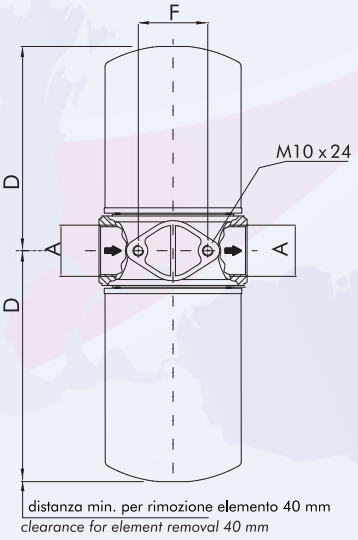

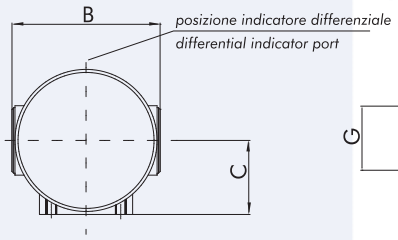

FA-1-40/41

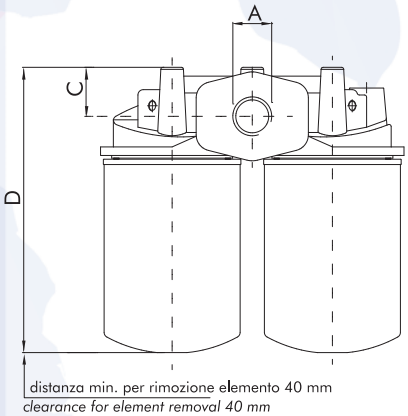

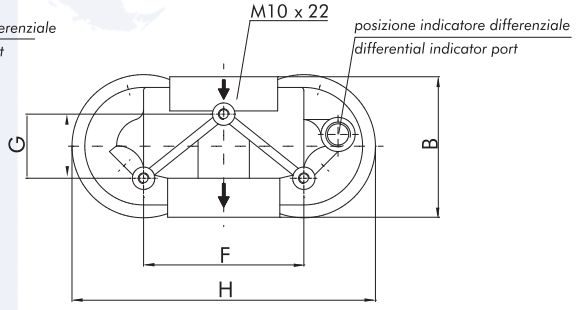

1) Grandezza nominale - *Nominal size*

Codice - *Code*	A	B	C	D	F	G	H	Cart. ricambio *Element*
FA-1-10	3/4" BSP	95	22	192	38	----	----	A-1-10
FA-1-11		95	22	257	38	----	----	A-1-11
FA-1-20	1 1/4" BSP	133	30	249	50	----	----	A-1-20
FA-1-21		133	30	295	50	----	----	A-1-21
FA-1-30	1 1/2" BSP	140	70	218	65	----	----	A-1-20
FA-1-31		140	70	262	65	----	----	A-1-21
FA-1-40	1 1/2" BSP	132	46	267	150	60	284	A-1-20
FA-1-41	1 1/2" SAE J518-3000	132	46	313	150	60	284	A-1-21

2) Dimensioni cartucce - *Element size*

Codice - *Code*	A	B	C
A-1-10	96	3/4" BSP	148
A-1-11	96	3/4" BSP	213
A-1-20	128	1 1/4" BSP	182
A-1-21	128	1 1/4" BSP	228

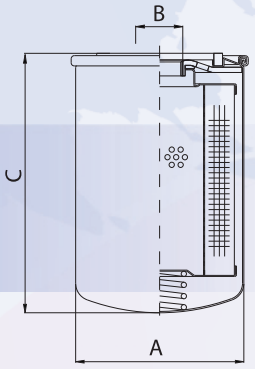

3) Grado di filtrazione - *Filtration ratings*

Codice - *Code*	Materiale - *Media*	Efficienza - *Efficiency*
0	senza cartuccia / *no element*	------
G03	microfibra inorganica / *microglass fiber*	$\beta_{4,5\ \mu M\ (C)} \geq 1000$
G06	microfibra inorganica / *microglass fiber*	$\beta_{7\ \mu M\ (C)} \geq 1000$
G10	microfibra inorganica / *microglass fiber*	$\beta_{12\ \mu M\ (C)} \geq 1000$
G25	microfibra inorganica / *microglass fiber*	$\beta_{27\ \mu M\ (C)} \geq 1000$
C10	carta trattata / *resin impregnated cellulose*	$\beta_{10\ \mu M\ (C)} \geq 2$
C25	carta trattata / *resin impregnated cellulose*	$\beta_{25\ \mu M\ (C)} \geq 2$
T60	tela metallica / *wire mesh*	------
T125	tela metallica / *wire mesh*	------

4) Connessioni - *Connection port*

Codice - *Code*	Connessione - *Connection*
B4	3/4" BSP
B6	1 1/4" BSP
B7	1 1/2" BSP
F7M	1 1/2" SAE J518 - 3000 - M 12

5) Valvola di by-pass - *By-pass valve*

Codice - *Code*	Taratura - *Setting*
0	senza / *without*
S	aspirazione / *suction* (0,25 Bar - *3,6 psi*)
R	ritorno o in linea / *return or in-line* (1,7 Bar - *24,6 psi*)

6) Indicatori - *Indicator*

Codice - *Code*	Tipo indicatore - *Indicator type*	Applicazione - *Application*
0	senza *without*	
S1	vuotometro scala 0÷-1 Bar *vacuum gauge indicator scale 0÷-1 Bar (14,5 Psi)*	in aspirazione *suction line*
S2	vuotostato n.a. taratura -0,2 Bar *vacuum switch -0,2 Bar setting O.C. (-2,9 Psi)*	
S3	vuotostato n.c. taratura -0,2 Bar *vacuum switch 0,2 Bar setting C.C. (-2,9 Psi)*	
S4	vuotostato visivo taratura -0,3 Bar *vacuum switch view -0,3 Bar setting (-4,35 Psi)*	
R1	manometro scala 0÷10 Bar *pressure gauge indicator scale 0÷10 Bar setting (0÷145 Psi)*	al ritorno *return line*
R2	pressostato n.a. taratura 1,3 Bar *pressure switch 1,3 Bar setting O.C. (18,85 Psi)*	
R3	pressostato n.c. taratura 1,3 Bar *pressure switch 1,3 Bar setting C.C. (18,85 Psi)*	
R4	pressostato taratura 1,3 Bar *pressure switch 1,3 Bar setting (18,85 Psi)*	
R6	pressostato visivo taratura 1,2 Bar *visual pressure 1,2 Bar setting (17,4 Psi)*	
R7	mano vuotometro taratura -1÷5 Bar *pressure/vacuum gauge -1÷5 Bar setting (-14,5÷72,5 Psi)*	
Z1	differenziale visivo taratura 1,3 Bar *differential visual switch 1,3 Bar setting (18,85 Psi)*	al ritorno solo per filtri FA-1-30/31 *return line only for FA-1-30/31*
Z2	differenziale visivo elettrico taratura 1,3 Bar *differential electric visual switch 1,3 Bar setting (18,85 Psi)*	al ritorno solo per filtri FA-1-30/31 *return line only for FA-1-30/31*
Z15	differenziale visivo taratura 1,3 Bar *differential visual switch 1,3 Bar setting (18,85 Psi)*	al ritorno solo per filtri FA-1-40/41 *return line only for FA-1-40/41*
Z16	differenziale visivo elettrico taratura 1,3 Bar *differential electric visual switch 1,3 Bar setting (18,85 Psi)*	al ritorno solo per filtri FA-1-40/41 *return line only for FA-1-40/41*
Z20	differenziale visivo taratura 1,3 Bar *differential visual switch 1,3 Bar setting (18,85 Psi)*	al ritorno solo per filtri FA-1-20/21 *return line only for FA-1-20/21*
Z21	differenziale elettrico taratura 1,3 Bar *differential electric switch 1,3 Bar setting (18,85 Psi)*	al ritorno solo per filtri FA-1-20/21 *return line only for FA-1-20/21*

Codici per l'ordinazione - *Ordering information*

Filtro completo *Filter assembly* — **FA-1**

31	C10	B7	R	R2
1*	3*	4*	5*	6*

Cartuccia *Filter element* — **A-1**

21	C10
1*	3*

Curve di portata - *Pressure drop charts*

Filtro *Housing*

Le curve (secondo ISO 3968 classe B) sono ottenute con olio minerale avente viscosità di 30 cSt e densità di 0,86 Kg/dm³. Per viscosità e densità diverse i dati variano.

Pressure drop charts (as per ISO 3968 class B) are obtained using mineral oil with 30 cSt viscosity and 0,86 Kg/dm³ density. With different values of viscosity and density data may vary.

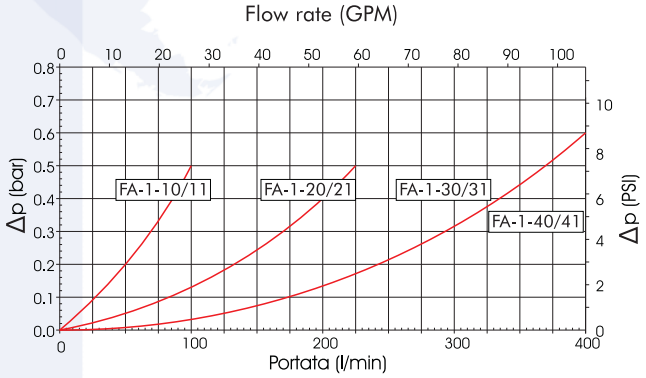

50% OFF ALL PRICES

A-1-10-...

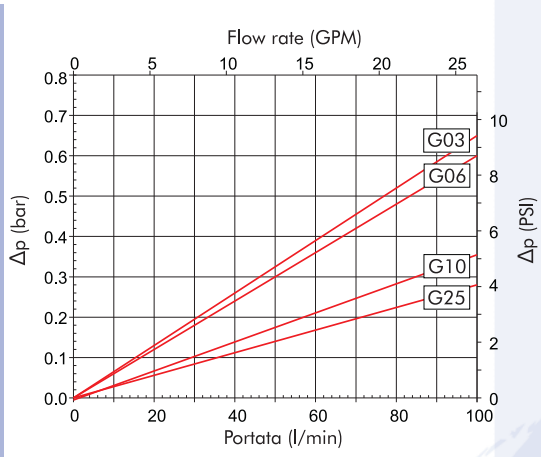

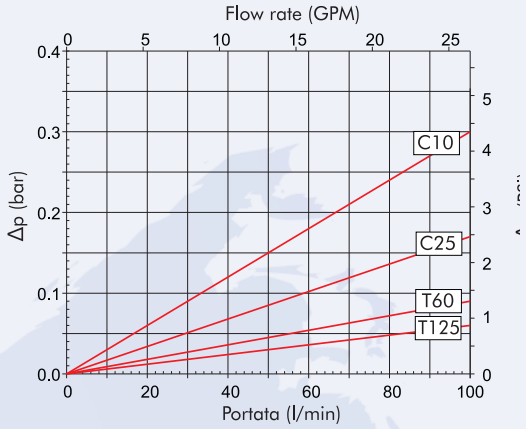

A-1-11-...

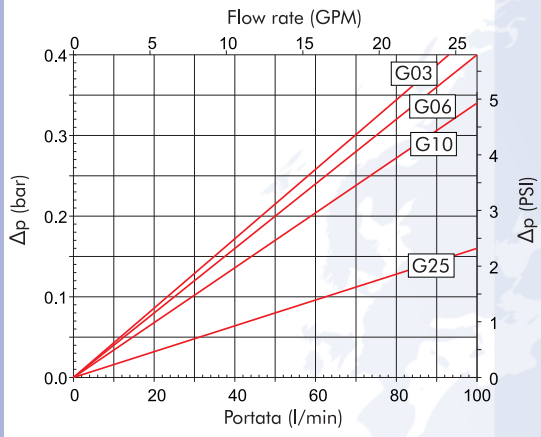

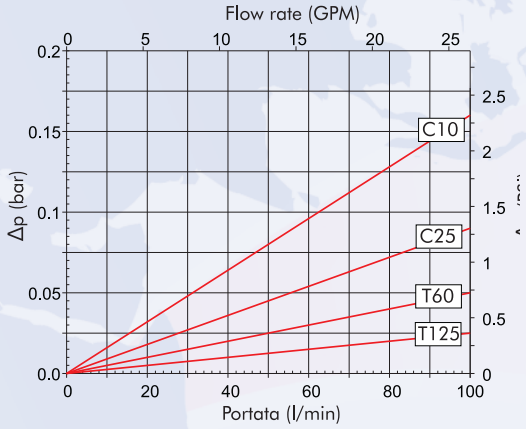

A-1-20-...

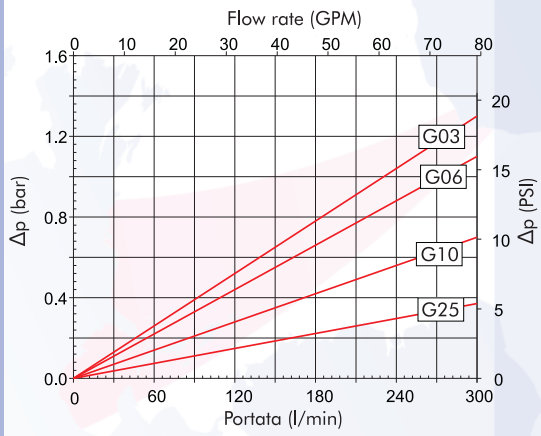

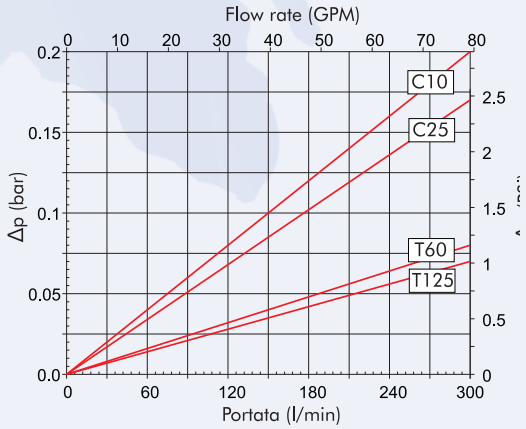

A-1-21-...

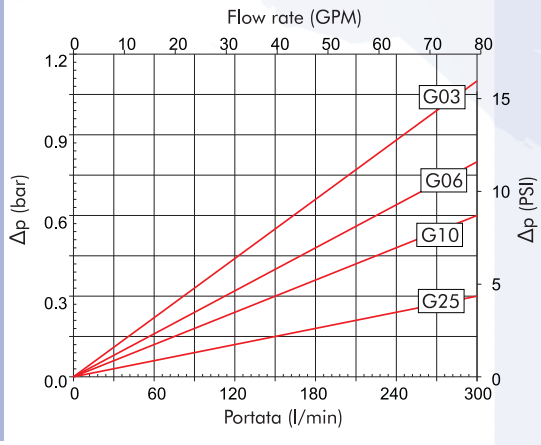

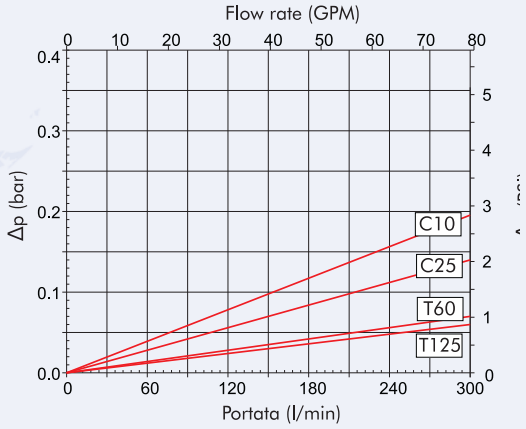

FILTRAZIONE IDRAULICA
HYDRAULIC FILTRATION

FILTREC®
Technical Filtration

serie
FS-1

50% OFF ALL PRICES

Serie FS-1

Filtri in aspirazione immersi
Suction filter

FILTER HOUSING

Technical Information

Description:	*Suction strainers for fluid reservoirs.*
Max flow rate:	*500 l/min (132 gpm)*
Collapse pressure:	*14,5 psi*
Port Connection:	*BSP (NPT on request)*
By-pass:	*No by-pass or 0,25 bar (3,6 psi) setting*
Working temperature:	*-25°C +100°C (-13°F +212°F)*
Materials:	• *Head: nylon* • *Endcap: zinc plated carbon steel* • *By-pass: NBR*
Filter media:	*Wire mesh 125 µm (60 and 250 µm on request)*
Fluids compatibility:	*ISO 2943: Filter assembly compatible with mineral oils and some synthetic or vegetable oils.* *For other fluids please contact our Customer Service (info@filtrec.it).*

ORDER CODE	FLOW RATE	THREAD	LENGTH	O/D	PRICE
125 MICRON WIREMESH					
FS110B2T125	12 L/MIN	3/8" BSP	91MM	46MM	£16.35
FS111B3T125	15 L/MIN	1/2" BSP	106MM	46MM	£16.55
FS120B4T125	30 L/MIN	3/4" BSP	109MM	64MM	£18.91
FS121B5T125	35 L/MIN	1" BSP	139MM	64MM	£19.75
FS130B5T125	40 L/MIN	1" BSP	139MM	86MM	£24.18
FS130B6T125	45 L/MIN	1 1/4" BSP	139MM	86MM	£23.61
FS130B7T125	50 L/MIN	1 1/2" BSP	139MM	86MM	£23.61
FS133B7T125	90 L/MIN	1 1/2" BSP	200MM	86MM	£26.30
FS134B8T125	120 L/MIN	2" BSP	260MM	86MM	£29.40
FS140B7T125	95 L/MIN	1 1/2" BSP	151MM	150MM	£40.31
FS140B8T125	100 L/MIN	2" BSP	151MM	150MM	£38.94
FS142B9T125	180 L/MIN	2 1/2" BSP	212MM	150MM	£44.63
FS143B10T125	300 L/MIN	3" BSP	272MM	150MM	£49.61
FS150B2T125	15 L/MIN	3/8" BSP	84MM	54MM	£18.45
FS150B3T125	20 L/MIN	1/2" BSP	84MM	54MM	£19.62
FS160B3T125	20 L/MIN	1/2" BSP	104MM	72.5MM	£23.22
FS160B4T125	30 L/MIN	3/4" BSP	104MM	72.5MM	£23.07
FS160B5T125	45 L/MIN	1" BSP	104MM	72.5MM	£23.07
FS160B6T125	55 L/MIN	1 1/4" BSP	104MM	72.5MM	£24.89
FS162B3T125	25 L/MIN	1/2" BSP	148MM	72.5MM	£24.97
FS162B4T125	40 L/MIN	3/4" BSP	148MM	72.5MM	£26.26
FS162B5T125	55 L/MIN	1" BSP	148MM	72.5MM	£26.43
FS162B6T125	60 L/MIN	1 1/4" BSP	148MM	72.5MM	£26.43
FS170B5T125	60 L/MIN	1" BSP	155MM	102MM	£33.80
FS170B6T125	80 L/MIN	1 1/4" BSP	155MM	102MM	£32.11
FS170B7T125	90 L/MIN	1 1/2" BSP	155MM	102MM	£33.85
FS170B8T125	100 L/MIN	2" BSP	155MM	102MM	£33.80
FS173B5T125	60 L/MIN	1" BSP	195MM	102MM	£43.97
FS173B6T125	90 L/MIN	1 1/4" BSP	195MM	102MM	£44.01
FS173B7T125	120 L/MIN	1 1/2" BSP	195MM	102MM	£44.01
FS173B8T125	130 L/MIN	2" BSP	195MM	102MM	£42.60
FS176B5T125	65 L/MIN	1" BSP	228MM	102MM	£48.65
FS176B6T125	110 L/MIN	1 1/4"BSP	228MM	102MM	£48.65
FS176B7T125	130 L/MIN	1 1/2" BSP	228MM	102MM	£48.94
FS176B8T125	140 L/MIN	2" BSP	228MM	102MM	£48.94
FS179B5T125	25 L/MIN	1" BSP	110MM	102MM	£33.97
FS180B8T125	140 L/MIN	2" BSP	202MM	132.5MM	£62.22
FS180B9T125	160 L/MIN	2 1/2" BSP	202MM	132.5MM	£60.69
FS180B10T125	200 L/MIN	3" BSP	202MM	132.5MM	£62.22
FS181B8T125	130 L/MIN	2" BSP	162MM	132.5MM	£74.66
FS181B10T125	190 L/MIN	3" BSP	162MM	132.5MM	£64.00

THE GIVEN FLOW RATE VALUES REFER TO APPLICATIONS WITH MINERAL OIL HAVING VISCOSITY OF 30 CST AT WORKING TEMPERATURE. FOR APPLICATIONS WITH DIFFERENT FLUID OR WORKING CONDITIONS, A CORRECTIVE FACTOR MUST BE APPLIED BY REFERING TO THE TECHNICAL INFORMATION.

Informazioni dimensionali - *Overall dimensions*

1) **Grandezza nominale** - *Nominal size*

Codice - Code	A	B	C	D	E
FS-1-10	3/8″	46	91	36	3
FS-1-11	1/2″		106		
FS-1-20	3/4″	64	109	50	6
FS-1-21	1″		139		
FS-1-30	1″ 1 1/4″ 1 1/2″	86	139	65	
FS-1-33	1 1/2″		200		
FS-1-34	1 1/4″ 1 1/2″ 2″		260	75	
FS-1-40	1 1/2″ 2″	150	151	110	9
FS-1-42	2 1/2″		212		
FS-1-43	3″		272		

Per filettatura NPT verificare la disponibilità con il nostro Servizio Clienti.
For NPT thread please check availability with our Customer Service.

FS-1-10 - ... - 43

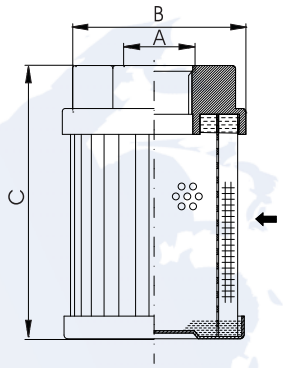

BY-PASS

Codice - Code	A	B	C	D	E
FS-1-50	3/8″ 1/2″	54	84	27	6
FS-1-60	1/2″ 3/4″ 1″ 1 1/4″	73	104	34 50	
FS-1-62	1/2″ 3/4″ 1″ 1 1/4″		148	34 50	
FS-1-70	1″ 1 1/4″ 1 1/2″ 2″	102	155	60 70	9
FS-1-73	1″ 1 1/4″ 1 1/2″ 2″		195	60 70	
FS-1-76	1″ 1 1/4″ 1 1/2″ 2″		228	60 70	
FS 1-79	1″ 1 1/4″ 1 1/2″ 2″		110	60 70	
FS-1-80	2″	131	202	98	
FS-1-81	2 1/2″		162		
FS-1-83	3″		235		
FS-1-86			278		
FS-1-89	1 1/2″ 2″		117		

Per filettatura NPT verificare la disponibilità con il nostro Servizio Clienti.
For NPT thread please check availability with our Customer Service.

FS-1-50 - ... - 89

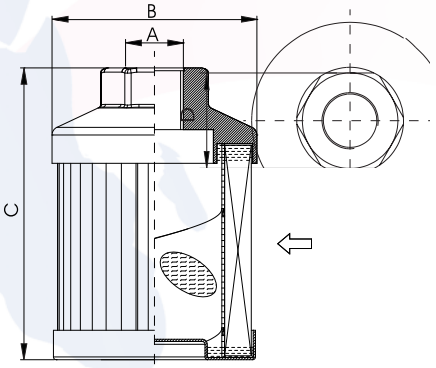

BY-PASS

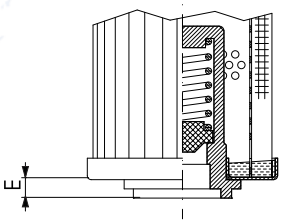

50% OFF ALL PRICES

2) Attacco - *Connection*

Codice - *Code*	Connessione - *Connection*
B2	3/8" BSP
B3	1/2" BSP
B4	3/4" BSP
B5	1" BSP
B6	1 1/4" BSP
B7	1 1/2" BSP
B8	2" BSP
B9	2 1/2" BSP
B10	3" BSP

Filettatura NPT disponibile per quantità, verificare la disponibilità con il nostro Servizio Clienti.

NPT option available for quantity, please check availability with our Customer Service.

3) Grado di filtrazione - *Filtration ratings*

Codice - *Code*	Materiale - *Media*
* **T60**	tela metallica - *wire mesh*
T125	tela metallica - *wire mesh*
* **T250**	tela metallica - *wire mesh*

* Verificare la disponibilità con il nostroServizio Clienti.
* *Please check availability with our Customer Service.*

4) Valvola di by-pass - *By-pass valve*

Codice - *Code*	Taratura - *Setting*
-	senza / *without*
* **B**	0,25 bar / *3,6 psi*

* Verificare la disponibilità con il nostro Servizio Clienti.
* *Please check availability with our Customer Service.*

Codici per l'ordinazione - *Ordering information*

FS-1	**30**	**B6**	**T125**	**B**
	1*	2*	3*	4*

Curve di portata - *Pressure drop diagrams*

In questo tipo di elementi filtranti la perdita di carico è principalmente relativa alla dimensione della connessione, indicata dal numero nel riquadro (es. 2 indica connessione B2 o N2).
La massima perdita di carico raccomandata è 0,03 bar (0,44 psi).

The pressure drop of these strainers is mainly related to the connection size, indicated by the number in the box (e.g. 2 means connection B2 or N2).
The maximum recommended pressure drop is 0,03 bar (0,44 psi).

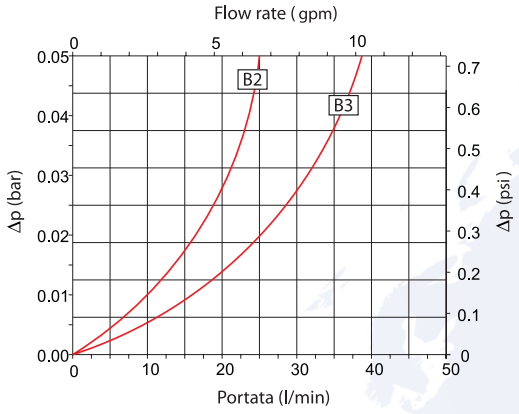

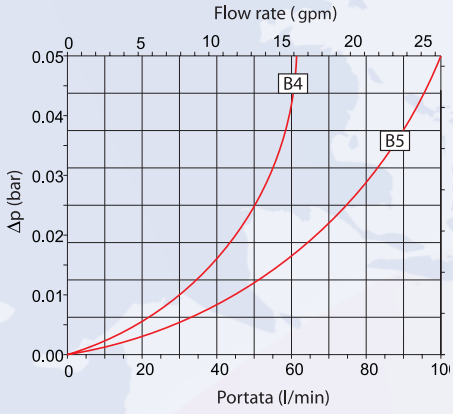

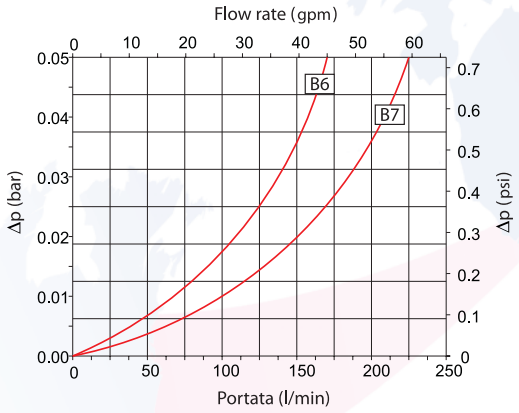

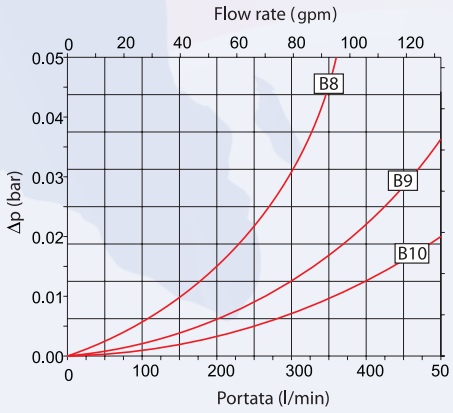

Le curve sono state ottenute presso il laboratorio FILTREC, secondo la normativa ISO 3968 con olio minerale avente viscosità di 30 cSt e densità 0,86 Kg/dm^3.
Per viscosità differente i dati variano, in prima approssimazione, proporzionalmente.
In caso vengano rilevati valori differenti, suggeriamo di verificare livello di contaminazione, viscosità e caratteristiche dell'olio utilizzato.

The pressure drop diagrams have been obtained at the FILTREC laboratory, according to the ISO 3968 specification, with mineral oil having 30 cSt viscosity and 0,86 Kg/dm^3 density.
When using oil with different viscosity the values change in a roughly proportional way.
In case of discrepancy, please check the contamination level, viscosity and features of the oil in use.

50% OFF ALL PRICES

FILTRAZIONE IDRAULICA
HYDRAULIC FILTRATION

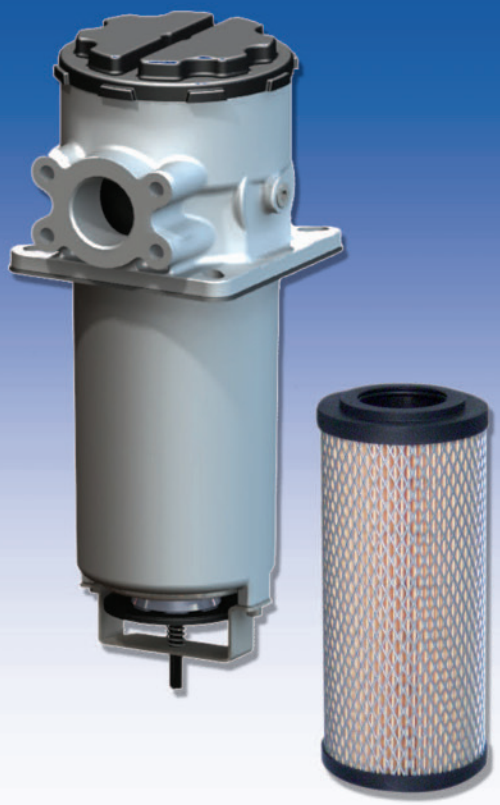

FILTREC®
Technical Filtration

serie
FS-7

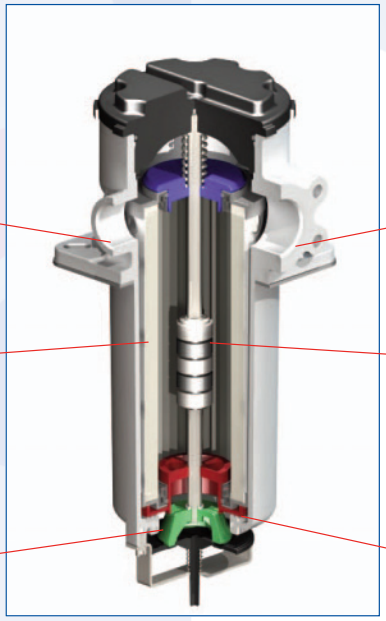

50% OFF ALL PRICES

Serie FS-7

Filtri in aspirazione
Suction filters

FILTER HOUSING

Technical Information

Description:	*Side tank suction filters mounted below oil level. No need to drain oil from tank when replacing element.*
Max flow rate:	*160 l/min (42 gpm)*
Indicator:	*Visual or electrical*
By-pass setting:	*No by-pass or 0,3 Bar setting (4,35 psi)*
Working temperature:	*-25°C +100°C (-13°F +212°F)*
Materials:	• *Cover: nylon* • *Housing: aluminium* • *Seal: Buna-N / Viton®*
Fluids compatibility:	*ISO 2943: Filter assembly compatible with mineral oils and some synthetic or vegetable oils. With other fluid applications please contact Filtrec S.p.A.*

FILTER ELEMENT

Filter media:	*Cellulose 10, 25 µm* *Wire mesh 60, 125, 250 µm*

DESCRIPTION	ORDER CODE	PORTS	FLOW RATE	PRICE	ELEMENT	PRICE
10 MICRON CELLULOSE						
FS-7-41-C10-B7-0-B-O-P-S5	ZZ004912	1 1/2" BSP	50 L/MIN	£260.15	S741C10	£66.76
125 MICRON WIREMESH						
FS-7-41-T125-B7-0-B-O-P-S5	ZZ004913	1 1/2" BSP	100 L/MIN	£271.11	S741T125	£80.45

THE GIVEN FLOW RATE VALUES REFER TO APPLICATIONS WITH MINERAL OIL HAVING VISCOSITY OF 30 CST AT WORKING TEMPERATURE. FOR APPLICATIONS WITH DIFFERENT FLUID OR WORKING CONDITIONS, A CORRECTIVE FACTOR MUST BE APPLIED BY REFERING TO THE TECHNICAL INFORMATION.

OPTIONAL EXTRAS

	PRICE
SECONDARY PORT	£19.59
MAGNET	£4.24
INDICATORS	
S6 VACUUM SWITCH -0.2 BAR SETTING	£91.58

Informazioni dimensionali - *Overall dimensions*

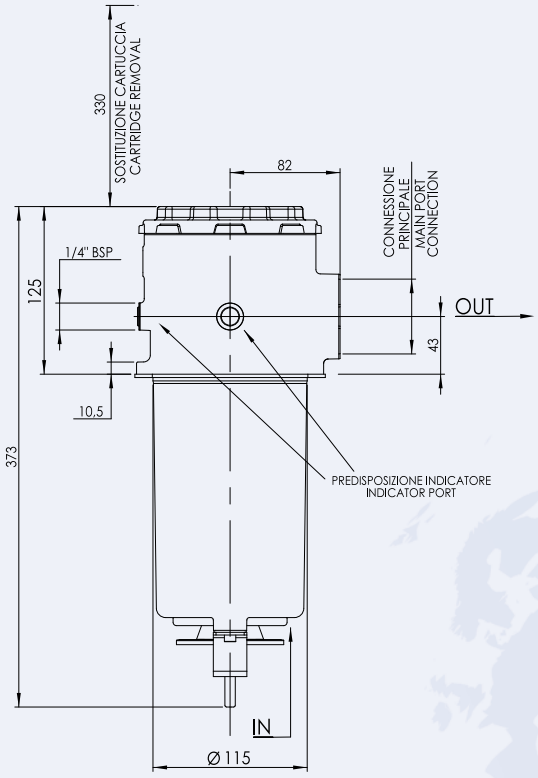

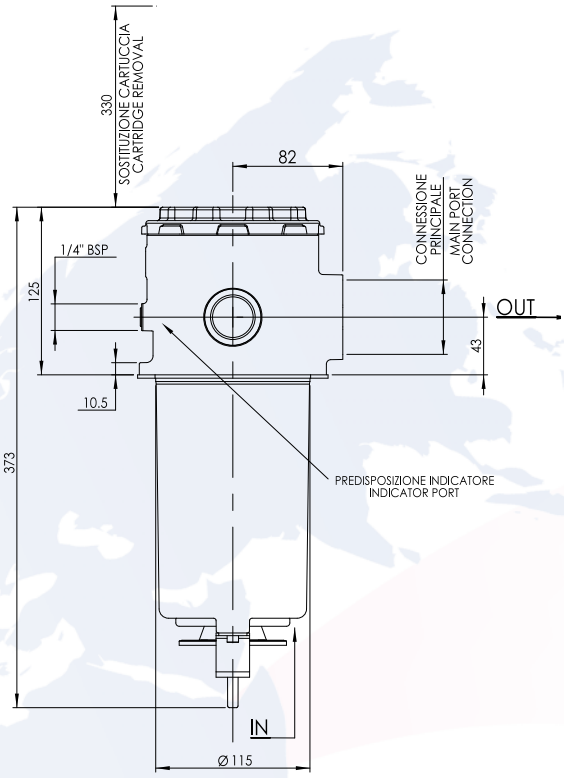

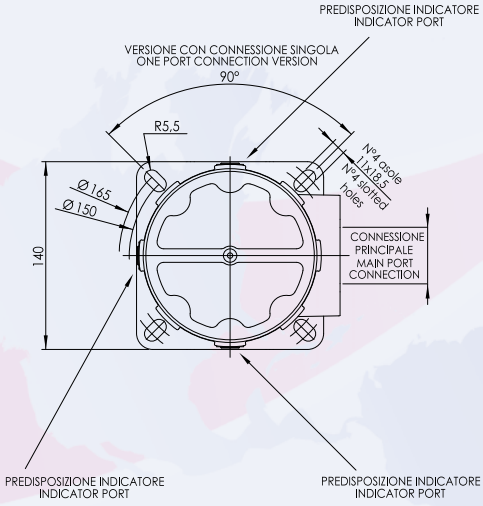

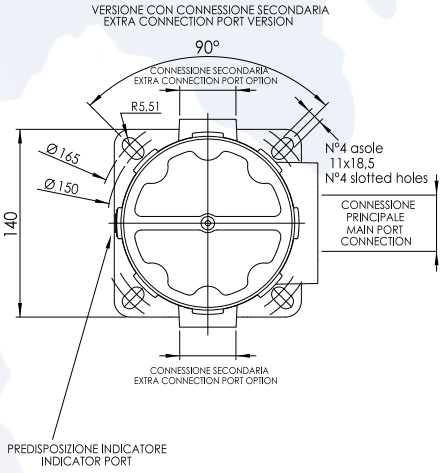

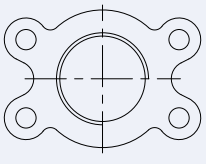

CONNESSIONE FILETTATA
THREAD CONNECTION PORT

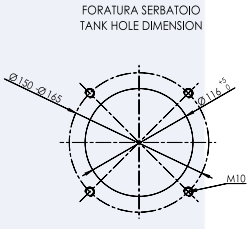

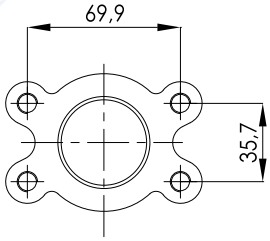

CONNESSIONE FLANGIATA
FLANGED CONNECTION

1) Grado di filtrazione - *Filtration rating*

Codice - *Code*	Materiale - *Media*	Efficienza - *Efficiency*
0	senza cartuccia / *no element*	------
C10	carta trattata / *resin impregnated cellulose*	$ß_{10} \geq 2$
C25	carta trattata / *resin impregnated cellulose*	$ß_{25} \geq 2$
T60	tela metallica / *wire mesh*	------
T125	tela metallica / *wire mesh*	------
T250	tela metallica / *wire mesh*	------

2) Guarnizioni - *Seals*

Codice - *Code*	Tipo - *Type*
---	NBR
V	Viton®

3) Connessioni - *Connection ports*

	Codice *Code*	Connessioni *Connection*
*	**B5**	1" BSP
	B6	1 1/4" BSP
	B7	1 1/2" BSP
*	**N5**	1" NPT
*	**N6**	1 1/4" NPT
*	**N7**	1 1/2" NPT
*	**R5**	1-5/16-12 UN-2B SAE J514b
*	**R6**	1-5/8-12 UN-2B SAE J514b
*	**R7**	1-7/8-12 UN-2B SAE J514b
*	**F7M**	1 1/2" SAE J518 - 3000 / M12
*	**F7U**	1 1/2" SAE J518 - 3000 / 1/2-13 UNC-2B

* contattare uff. comm.
contact sales dept

4) Connessioni secondarie
Extra connection ports

Codice - *Code*	Tipo - *Type*	Posizione indicatore - *Indicator position*
0	senza / *without*	**T**
B5	1" BSP	**P**

NOTE vedi tabella 7
refer to table 7

5) Taratura by-pass - *By-pass setting*

Codice - *Code*	Taratura - *Setting*
0	Senza by-pass *No by-pass*
B	Taratura 0,3 Bar *Setting 0,3 Bar (4,35 psi)*

6) Colonna magnetica - *Magnet*

Codice - *Code*	Colonna magnetica - *Magnets*
0	senza / *without*
M	con / *with*

7) Posizione indicatore - *Indicator position*

Codice - *Code*	Posizione - *Position*
P	posteriore/ *rear (standard)*
T	posteriore - destra - sinistra / *rear - right - left*

NOTE vedi tabella 4
refer to table 4

8) Indicatori - *Indicators*

Codice - *Code*	Tipo indicatore - *Indicator type*
0	senza / *without*
S5	vuotometro scala 0÷ -1 Bar *vacuum gauge indicator scale 0 ÷ -1 Bar*
S6	vuotostato taratura -0,2 Bar *vacuum switch -0,2 Bar setting*

Codici per l'ordinazione - *Ordering information*

Filtro completo
Filter assembly

FS-7-41

C10	V	B7	B5	B	M	P	S6
1*	2*	3*	4*	5*	6*	7*	8*

Cartuccia
Filter element

S7-41

C10	V
1*	2*

Curve di portata - *Pressure drop charts*

Le curve (secondo ISO 3968 classe B) sono ottenute con olio minerale avente viscosità di 30 cSt e densità di 0,86 Kg/dm³. Per viscosità e densità diverse i dati variano.
Il numero relativo alla curva di portata è riferito all'attacco del filtro; es.: 5 indica attacco B5 o N5.

Pressure drop charts (as per ISO 3968 class B) are obtained using mineral oil with 30 cSt viscosity and 0,86 Kg/dm³ density. With different values of viscosity and density data may vary.
The numbers indicate connection of the filters: i.e. 5 means B5 or N5 connections.

Filtro *Housing*

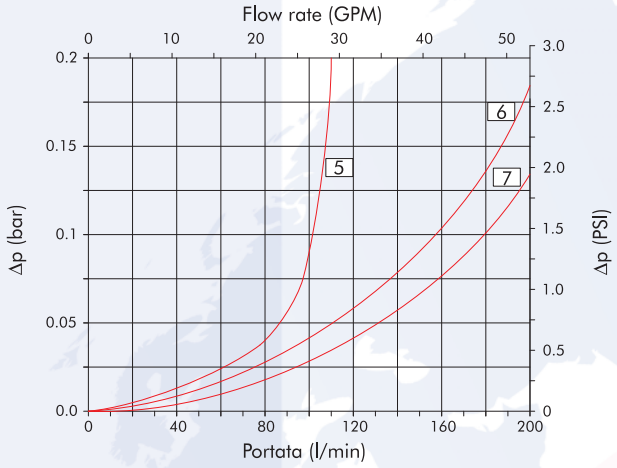

Valvola di by-pass *By-pass valve*

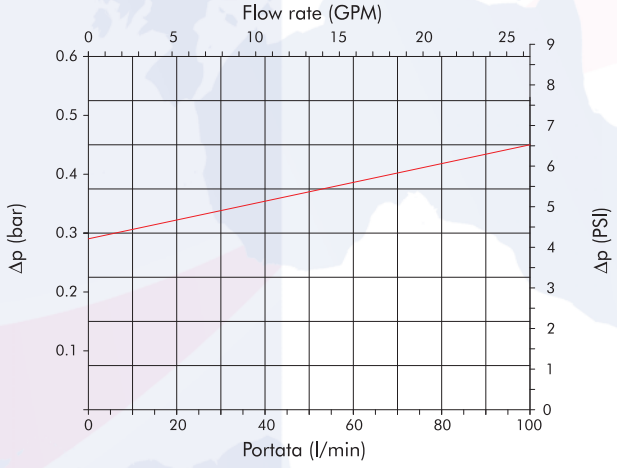

Cartuccia filtrante *Filter element*

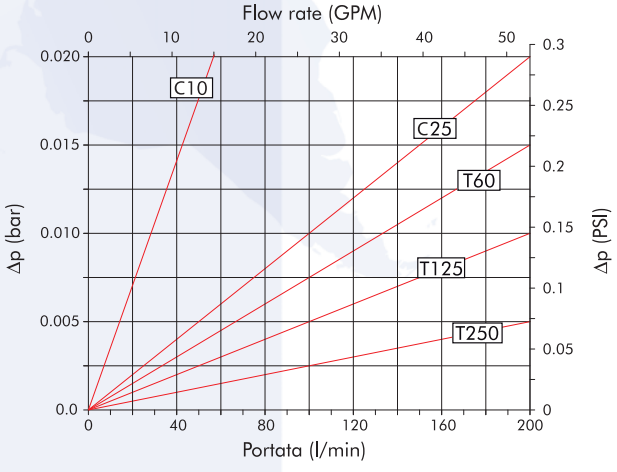

* Viton® è un marchio registrato da DuPont - *Viton® is a registered trademark of DuPont*
Sono possibili variazioni al catalogo senza preavviso - *Catalogue may change without notice*

50% OFF ALL PRICES

PRESSURE FILTERS

F100-XD INLINE HIGH PRESSURE MAX 80-100 BAR 706
FD-3 INLINE MEDIUM PRESSURE MAX 100 BAR 715
F160-XD INLINE MEDIUM PRESSURE MAX 160 BAR 721
F280-D1 INLINE HIGH PRESSURE MAX 280 BAR 730
FDM-1 CETOP MOUNTABLE HIGH PRESSURE MAX 315 BAR 740

FLOWFIT®

FILTRAZIONE IDRAULICA
HYDRAULIC FILTRATION

FILTREC®
Technical Filtration

serie
F100-XD

50% OFF ALL PRICES

F100-XD040 / 063 / 100

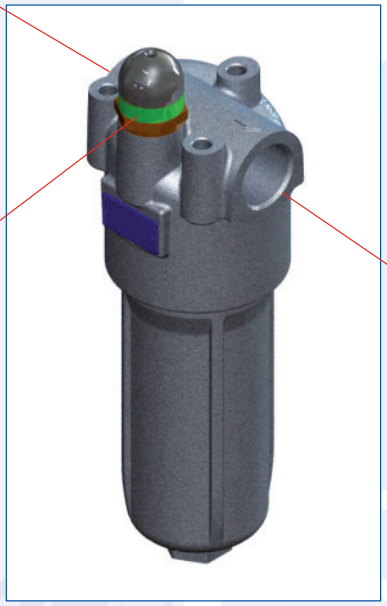

F100-XD160 / 250 / 400

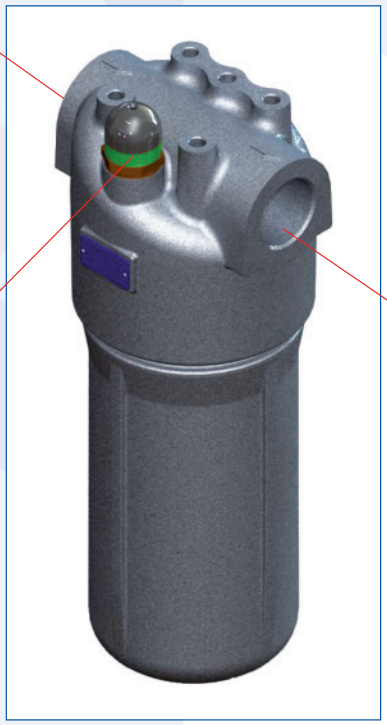

Serie F100

Filtri in linea per media pressione
In line medium pressure filters

FILTER HOUSING

Technical Information

Description:	*In line medium pressure filter assembly with cleanable or disposable elements*
Max flow rate:	*400 l/min (105.5 gpm)*
Max working pressure:	*As per NFPA T 3.10.5.1:*
Test pressure:	*As per NFPA T 3.10.5.1:*
Burst pressure:	*As per NFPA T 3.10.5.1:*
Connection Ports:	*BSP, NPT*
By-pass:	*No By-pass or 6 Bar (87 psi) setting*
Working temperature:	*-25°C +120°C (-13°F +248°F)*
Materials:	• *Head: aluminium* • *Bowl: aluminium* • *Seal: Buna-N / Viton®*
Fluids compatibility:	*ISO 2943: Filter assembly compatible with mineral oils and some synthetic or vegetable oils. With other fluid applications please contact Filtrec S.p.A.*

F100-XD040/063/100	F100-XD160/250/400
100 Bar (1450 psi)	80 Bar (1160 psi)
150 Bar (2176 psi)	120 Bar (1740 psi)
300 Bar (4351 psi)	200 Bar (2900 psi)

FILTER ELEMENT

	Filter element dimensions according to DIN 24550
Filter media:	*Microglass fiber 3, 6, 10, 15, 25 µ, cellulose 10 µ*
Collapse pressure:	*As per ISO 2941: 21 Bar (305 psi) and 210 Bar (3045 psi)*

DESCRIPTION	ORDER CODE	PORTS	FLOW RATE	PRICE	ELEMENT	PRICE
COMPLETE WITH LOW COLLAPSE ELEMENT, VISUAL INDICATOR AND BYPASS						
10 MICRON FIBREGLASS						
F100-XD-040-G10-A-B5-D-S-Z30	ZZ004914	1" BSP	40 L/MIN	£293.92	XD040G10A	£84.88
F100-XD-063-G10-A-B5-D-S-Z30	ZZ004915	1" BSP	60 L/MIN	£307.74	XD063G10A	£89.21
F100-XD-100-G10-A-B5-D-S-Z30	ZZ004916	1" BSP	100 L/MIN	£333.31	XD100G10A	£99.25
F100-XD-160-G10-A-B7-D-S-Z30	ZZ004917	1 1/2" BSP	160 L/MIN	£322.66	XD160G10A	£120.84
F100-XD-250-G10-A-B7-D-S-Z30	ZZ004918	1 1/2" BSP	250 L/MIN	£333.05	XD250G10A	£120.84
F100-XD-400-G10-A-B7-D-S-Z30	ZZ004919	1 1/2" BSP	400 L/MIN	£429.22	XD400G10A	£219.16
25 MICRON FIBREGLASS						
F100-XD-040-G25-A-B5-D-S-Z30	ZZ004920	1" BSP	60 L/MIN	£293.92	XD040G25A	£84.88
F100-XD-063-G25-A-B5-D-S-Z30	ZZ004921	1" BSP	100 L/MIN	£307.74	XD063G25A	£89.21
F100-XD-100-G25-A-B5-D-S-Z30	ZZ004922	1" BSP	160 L/MIN	£333.31	XD100G25A	£99.25
F100-XD-160-G25-A-B7-D-S-Z30	ZZ004923	1 1/2" BSP	200 L/MIN	£323.55	XD160G25A	£120.84
F100-XD-250-G25-A-B7-D-S-Z30	ZZ004924	1 1/2" BSP	300 L/MIN	£333.05	XD250G25A	£120.84
F100-XD-400-G25-A-B7-D-S-Z30	ZZ004925	1 1/2" BSP	400 L/MIN	£429.22	XD400G25A	£219.16

THE GIVEN FLOW RATE VALUES REFER TO APPLICATIONS WITH MINERAL OIL HAVING VISCOSITY OF 30 CST AT WORKING TEMPERATURE. FOR APPLICATIONS WITH DIFFERENT FLUID OR WORKING CONDITIONS, A CORRECTIVE FACTOR MUST BE APPLIED BY REFERING TO THE TECHNICAL INFORMATION.

OPTIONAL EXTRAS

	PRICE
VITON SEALS	
F100-XD040,XD063 & XD100	£13.70
F100-XD160,XD250 & XD400	£13.70
INDICATORS	
Z31 DIFFERENTIAL ELECTRICAL VISUAL 5 BAR 7.2 PSI	£65.13
Z32 DIFFERENTIAL VISUAL SWITCH 8 BAR 116 PSI	£47.32
Z33 DIFFERENTIAL ELECTRICAL VISUAL 8 BAR 116 PSI	£65.13

50% OFF ALL PRICES

Informazioni dimensionali - *Overall dimensions*

F100-XD040 / 063 / 100

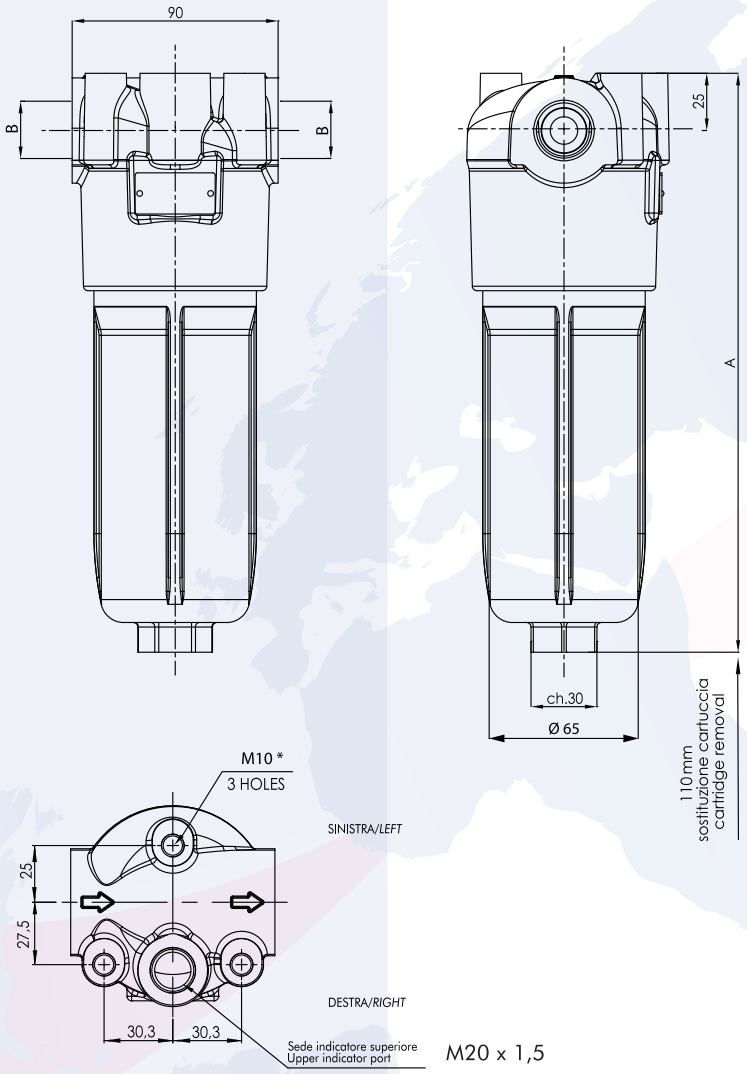

1) Grandezza nominale - *Nominal size*

Codice - *Code*	A	B	Cart. ricambio - *Element*
F100-XD040	183	1/2" BSP	XD-040
F100-XD063	253	3/4" BSP	XD-063
F100-XD100	332	1" BSP	XD-100

Per NPT contattare l'ufficio commerciale
For NPT please contact sales department

*Per fori di fissaggio UN contattare l'ufficio commerciale
**For UN thread fixing for holes please contact sales department*

Informazioni dimensionali - *Overall dimensions*

F100-XD160 / 250 / 400

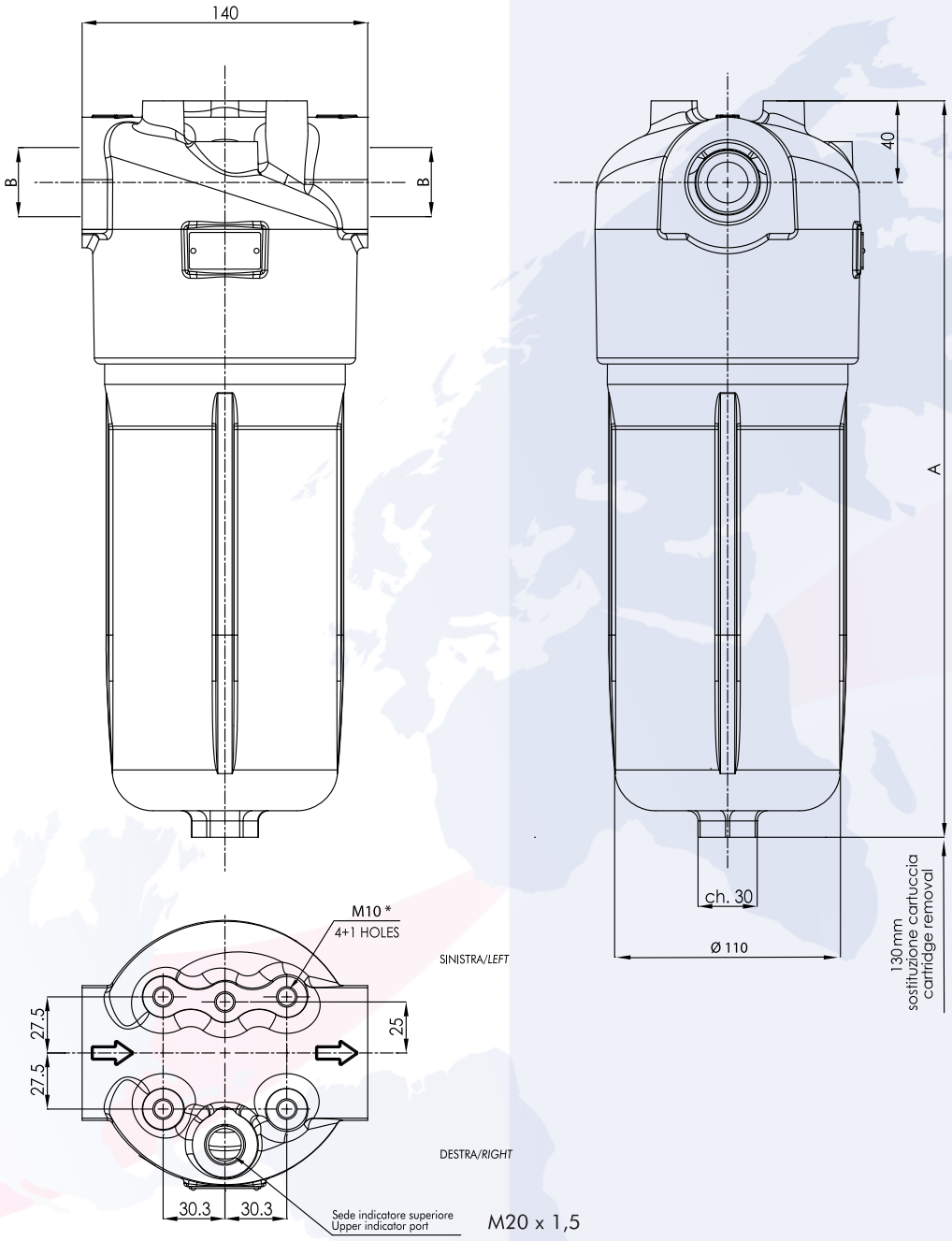

1) Grandezza nominale - *Nominal size*

Codice - *Code*	A	B	Cart. ricambio - *Element*
F100-XD160	289	1" 1/4 BSP 1" 1/2 BSP	XD-160
F100-XD250	361		XD-250
F100-XD400	514		XD-400

Per NPT contattare l'ufficio commerciale
For NPT please contact sales department

*Per fori di fissaggio UN contattare l'ufficio commerciale
**For UN thread fixing for holes please contact sales department*

50% OFF ALL PRICES

2) Grado di filtrazione - *Filtration ratings*

Codice - *Code*	Materiale - *Media*	Efficienza - *Efficiency*
0	senza cartuccia / *no element*	------
G03	microfibra inorganica / *microglass fiber*	$\beta_{4,5\ \mu m\ (c)} \geq 1000$
G06	microfibra inorganica / *microglass fiber*	$\beta_{7\ \mu m\ (c)} \geq 1000$
G10	microfibra inorganica / *microglass fiber*	$\beta_{12\ \mu m\ (c)} \geq 1000$
G15	microfibra inorganica / *microglass fiber*	$\beta_{18\ \mu m\ (c)} \geq 1000$
G25	microfibra inorganica / *microglass fiber*	$\beta_{27\ \mu m\ (c)} \geq 1000$
C10	carta / *cellulose*	$\beta_{10\ \mu m\ (c)} \geq 2$

Solo Δp 21 Bar (305 psi)
Δp 21 Bar (305 psi) only

3) Collasso cartuccia - *Element collapse*

Codice - *Code*	Δp (Bar) - *Δp(psi)*
A	21Bar / *305 psi*
B	210Bar / *3045 psi*

4) Guarnizioni - *Seals*

Codice - *Code*	Tipo - *Type*
---	NBR
V	Viton®

5) Connessioni - *Connection port*

Codice - *Code*	B	C
B3	1/2" BSP	M10
B4	3/4" BSP	M10
B5	1" BSP	M10
B6	1" 1/4 BSP	M10
B7	1" 1/2 BSP	M10
N3	1/2" NPT	3/8-16 UNC - 2B
N4	3/4" NPT	3/8-16 UNC - 2B
N5	1" NPT	3/8-16 UNC - 2B
N6	1" 1/4 NPT	3/8-16 UNC - 2B
N7	1" 1/2 NPT	3/8-16 UNC - 2B

Su richiesta - *On request*

6) Valvola di by-pass - *By-pass valve*

Codice - *Code*	Taratura - *Setting*
0	senza / *without*
D	6 Bar / *87 psi*

7) Predisposizione indicatori - *Indicator port options*

Codice - *Code*	Posizione - *Position*
0	senza / *without*
S	lavorazione per indicatore superiore con tappo di chiusura *upper indicator port side with plug*

— Su richiesta - *On request*

8) Indicatori - *Indicator*

Codice - *Code*	Tipo indicatore - *Indicator type*	Taratura - *Setting*
0	senza / *without*	------
Z30	differenziale visivo *differential visual switch*	5 Bar *72.5 psi*
Z31	differenziale visivo elettrico *differential electrical visual*	5 Bar *72.5 psi*
Z32	differenziale visivo *differential visual switch*	8 Bar *116 psi*
Z33	differenziale visivo elettrico *differential electrical visual*	8 Bar *116 psi*

Codici per l'ordinazione - *Ordering information*

Filtro completo
Filter assembly

F100-XD	100	G10	A	V	B3	D	S	Z31
	1*	2*	3*	4*	5*	6*	7*	8*

Cartuccia
Filter element

XD	100	G10	A	V
	1*	2*	3*	4*

* Viton® è un marchio registrato da DuPont - *Viton® is a registered trademark of DuPont*
Sono possibili variazioni al catalogo senza preavviso - *Catalogue may change without notice*

50% OFF ALL PRICES

Curve di portata - *Pressure drop charts*

Le curve (secondo ISO 3968 classe B) sono ottenute con olio minerale avente viscosità di 30 cSt e densità di 0,86 Kg/dm³.
Per viscosità e densità diverse i dati variano.

Pressure drop charts (as per ISO 3968 class B) are obtained using mineral oil with 30 cSt viscosity and 0,86 Kg/dm³ density. With different values of viscosity and density data may vary.

Filtro F100-XD160-250-400
Housing F100-XD160-250-400

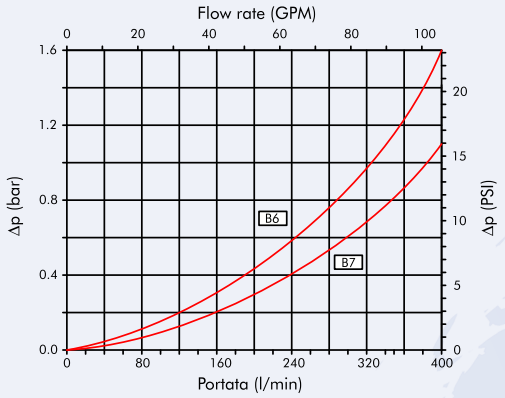

By-pass F100-XD160-250-400
By-pass F100-XD160-250-400

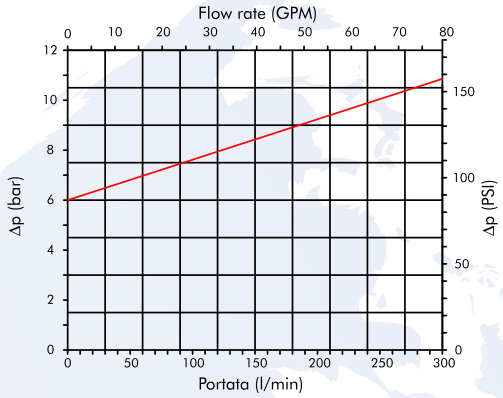

XD-160-...-A

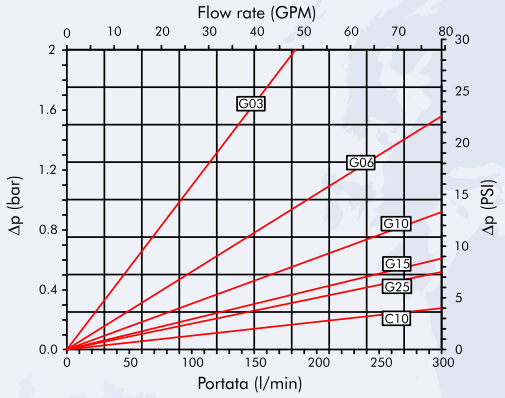

XD-160-...-B

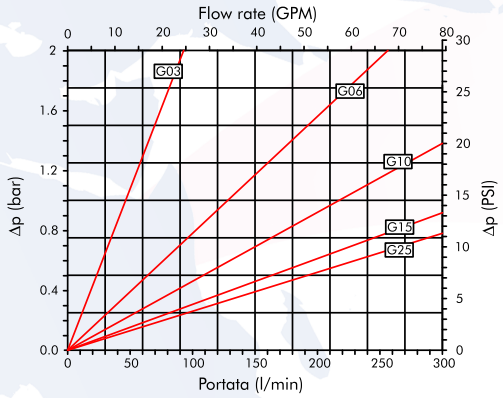

XD-250-...-A

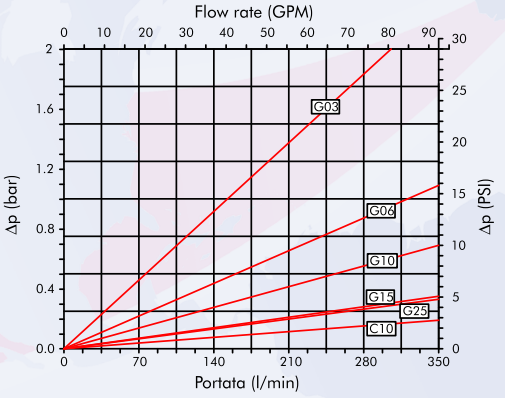

XD-250-...-B

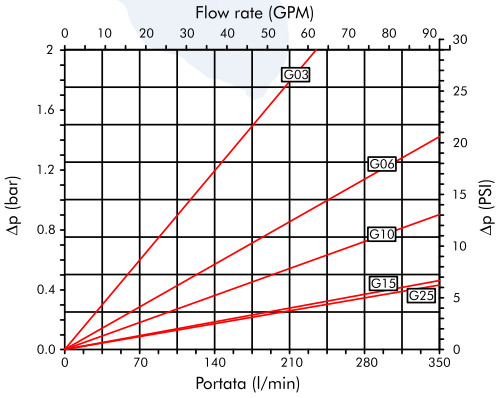

XD-400-...-A

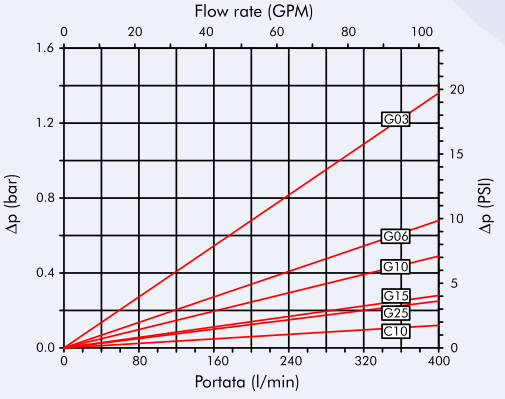

XD-400-...-B

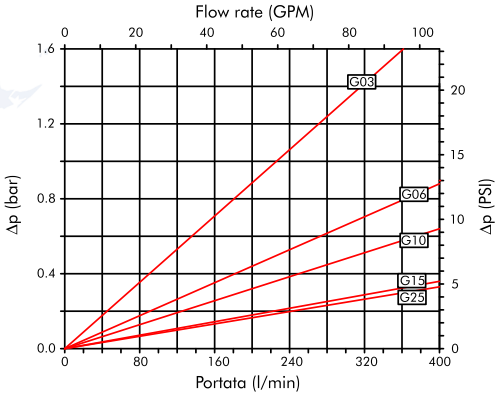

Filtro F100-XD040-063-100
Housing F100-XD040-063-100

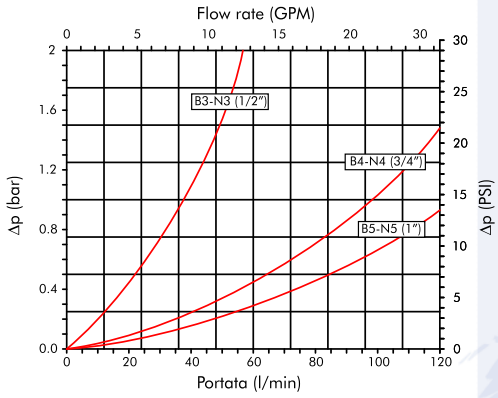

By-pass F100-XD040-063-100
By-pass F100-XD040-063-100

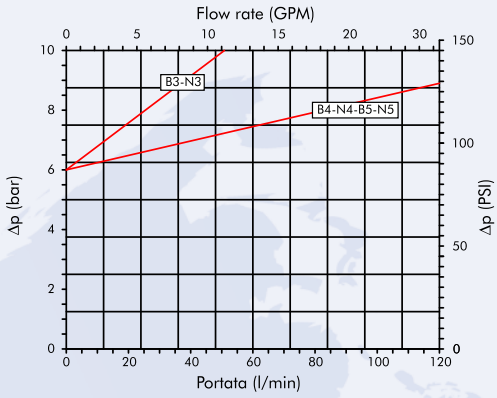

XD-040-...-A

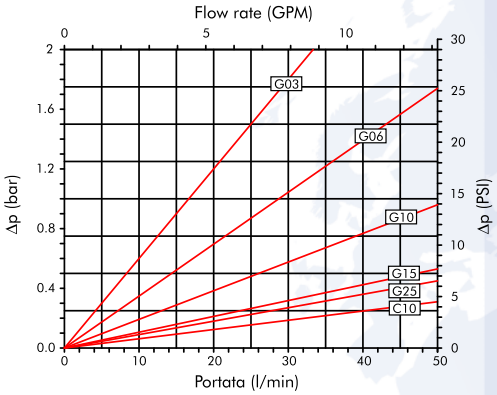

XD-040-...-B

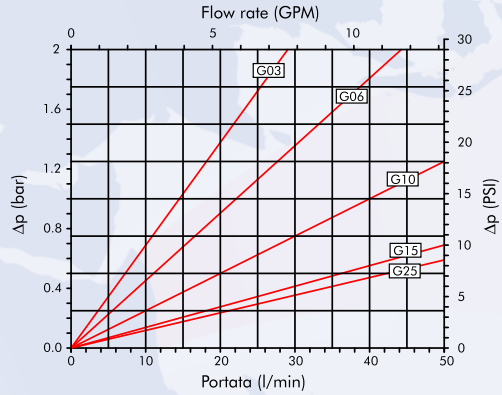

XD-063-...-A

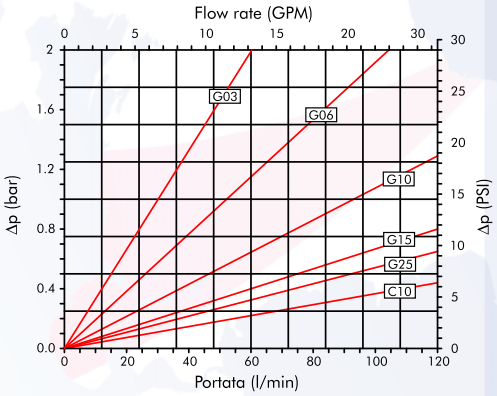

XD-063-...-B

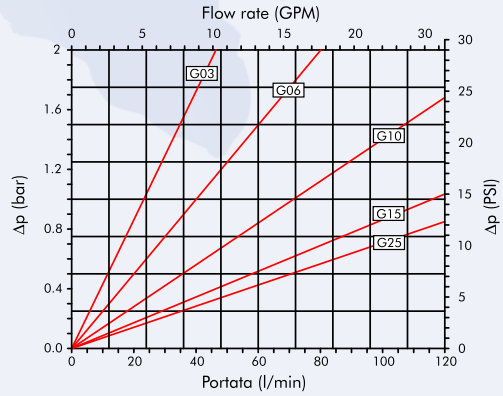

XD-100-...-A

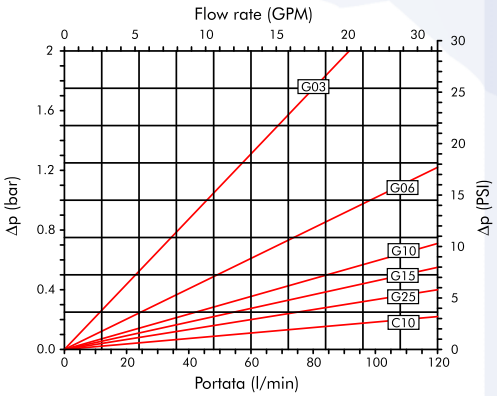

XD-100-...-B

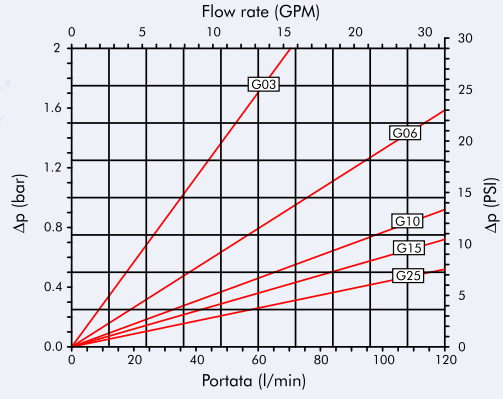

50% OFF ALL PRICES

FILTRAZIONE IDRAULICA
HYDRAULIC FILTRATION

FILTREC®
Technical Filtration

serie
FD-3

FD-3-10

FD-3-11

50% OFF ALL PRICES

Serie FD-3

Filtri in linea per le medie pressioni
In linea medium pressure filters

FILTER HOUSING

Technical Information

Description:	*In line medium pressure filter assembly with reusable or disposable element.*
Max flow rate:	*40 l/min (10,5 gpm)*
Max working pressure:	*As per NFPA T 3.10.5.1: 110 Bar (1595 psi)*
Test pressure:	*As per NFPA T 3.10.5.1: 160 Bar (2320 psi)*
Burst pressure:	*As per NFPA T 3.10.5.1: 330 Bar (4785 psi)*
Fatigue test:	*≥ 1.000.000 cycles 0-80 Bar, as per NFPA T 3.10.5.1*
Connection Ports:	*BSP, NPT*
By-pass:	*No by-pass or 6 Bar (87 psi) setting*
Indicator:	*Differential visual and differential electrical visual , 5 Bar (72.5 psi) setting.*
Working temperature:	*-25°C +120°C (-13°F +248°F)*
Materials:	• *Head: aluminium* • *Bowl: aluminium* • *Seal: Buna-N / Viton®*
Fluids compatibility:	*ISO 2943: Filter assembly compatible with mineral oils and some synthetic or vegetable oils. With other fluid applications please contact Filtrec S.p.A.*

FILTER ELEMENT

Filter media:	*Microglass fiber 3,6,10,25 µm* *Cellulose 10,25 µm* *Wire mesh 10, 25, 60, 125 µm*
Collapse pressure:	*as per ISO 2941: 21 Bar (305 psi)*

DESCRIPTION	ORDER CODE	PORTS	FLOW RATE	PRICE	ELEMENT	PRICE
COMPLETE WITH LOW COLLAPSE ELEMENT, VISUAL INDICATOR AND BYPASS						
10 MICRON CELLULOSE						
FD-3-10-C10-A-B3-D-T-Z12	ZZ004926	1/2" BSP	40 L/MIN	£169.64	D310C10A	£30.48
FD-3-11-C10-A-B3-D-T-Z12	ZZ004927	1/2" BSP	50 L/MIN	£202.91	D311C10A	£34.98
10 MICRON FIBREGLASS						
FD-3-10-G10-A-B3-D-T-Z12	ZZ004928	1/2" BSP	30 L/MIN	£187.58	D310G10A	£34.98
FD-3-11-G10-A-B3-D-T-Z12	ZZ004929	1/2" BSP	40 L/MIN	£218.11	D311G10A	£50.88
25 MICRON FIBREGLASS						
FD-3-10-G25-A-B3-D-T-Z12	ZZ004930	1/2" BSP	35 L/MIN	£182.06	D310G25A	£31.80
FD-3-11-G25-A-B3-D-T-Z12	ZZ004931	1/2" BSP	45 L/MIN	£215.18	D311G25A	£42.40

THE GIVEN FLOW RATE VALUES REFER TO APPLICATIONS WITH MINERAL OIL HAVING VISCOSITY OF 30 CST AT WORKING TEMPERATURE. FOR APPLICATIONS WITH DIFFERENT FLUID OR WORKING CONDITIONS, A CORRECTIVE FACTOR MUST BE APPLIED BY REFERING TO THE TECHNICAL INFORMATION.

OPTIONAL EXTRAS

	PRICE
VITON SEALS	POA
Z13 DIFFERENTIAL ELECTRICAL VISUAL INDICATOR 5 BAR 72.5 PSI	£65.13

Informazioni dimensionali - *Overall dimensions*

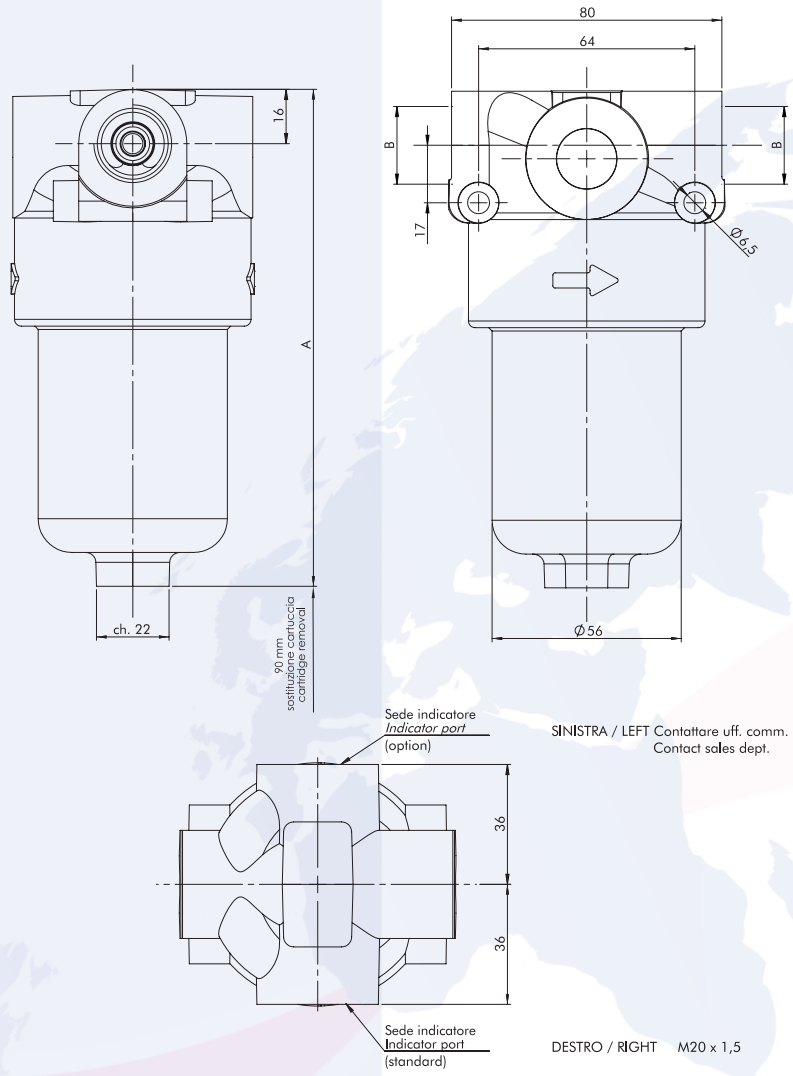

1) **Grandezza nominale** - *Nominal size*

Codice - *Code*	A	B	Cart. Rcambio - *Repl. Element*
FD-3-10	147	1/2" BSP	D-3-10
FD-3-11	236	1/2" NPT	D-3-11

2) **Grado di filtrazione** - *Filtration ratings*

Codice - *Code*	Materiale - *Media*	Efficienza - *Efficiency*
0	senza cartuccia / *no element*	------
G03	microfibra inorganica / *microglass fiber*	$ß_{4,5\ \mu m\ (c)} \geq 1000$
G06	microfibra inorganica / *microglass fiber*	$ß_{7\ \mu m\ (c)} \geq 1000$
G10	microfibra inorganica / *microglass fiber*	$ß_{12\ \mu m\ (c)} \geq 1000$
G25	microfibra inorganica / *microglass fiber*	$ß_{27\ \mu m\ (c)} \geq 1000$
C10	carta trattata / *resin impregnated cellulose*	$ß_{10\ \mu m\ (c)} \geq 2$
C25	carta trattata / *resin impregnated cellulose*	$ß_{25\ \mu m\ (c)} \geq 2$
T10	tela metallica / *wire mesh*	------
T25	tela metallica / *wire mesh*	------
T60	tela metallica / *wire mesh*	------
T125	tela metallica / *wire mesh*	------

50% OFF ALL PRICES

3) Guarnizioni - *Seals*

Codice - *Code*	Tipo - *Type*
---	NBR
V	Viton®

4) Connessioni - *Connection port*

Codice - *Code*	Connessione - *Connection*
B3	1/2" BSP
N3	1/2" NPT

5) Valvola di by-pas - *By-pass valve*

Codice - *Code*	Taratura - *Setting*
0	senza / *without*
D	6 Bar / *87 psi*

6) Predisposizione indicatori - *Indicator port options*

Codice - *Code*	Posizione - *Position*
0	senza / *without*
T	lavorazione per indicatore lato destro - con tappo di chiusura *indicators port on the right side with plug*
D	lavorazione per indicatore lato destro - nessun tappo di chiusura *indicators port on the right side without plug*

7) Indicatori - *Indicator*

Codice - *Code*	Tipo indicatore - *Indicator type*	Efficienza - *Efficiency*
0	senza / *without*	------
Z12	differenziale visivo *differential visual switch*	5 Bar *72.5 psi*
Z13	differenziale visivo elettrico *differential electrical visual*	5 Bar *72.5 psi*

Codici per l'ordinazione - *Ordering information*

Filtro completo
Filter assembly

FD-3

10	G10	A	V	B3	D	T	Z12
1*	2*		3*	4*	5*	6*	7*

Cartuccia
Filter element

D-3

10	G10	A	V
1*	2*		3*

Curve di portata - *Pressure drop charts*

Le curve (secondo ISO 3968 classe B) sono ottenute con olio minerale avente viscosità di 30 cSt e densità di 0,86 Kg/dm³. Per viscosità e densità diverse i dati variano.

Pressure drop charts (as per ISO 3968 class B) are obtained using mineral oil with 30 cSt viscosity and 0,86 Kg/dm³ density. With different values of viscosity and density data may vary.

Filtro *Housing*

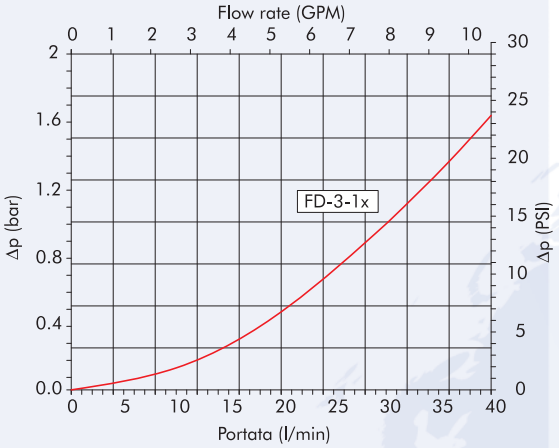

By-pass

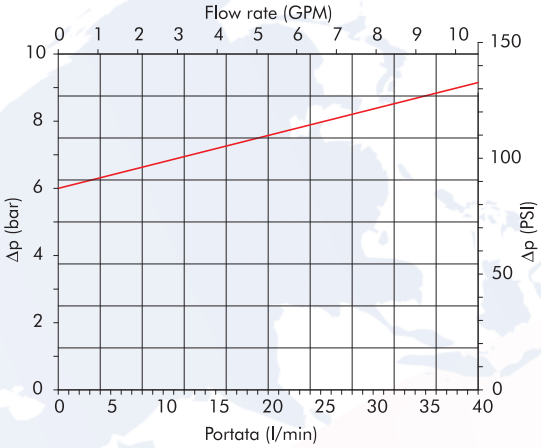

D-3-10-..-A

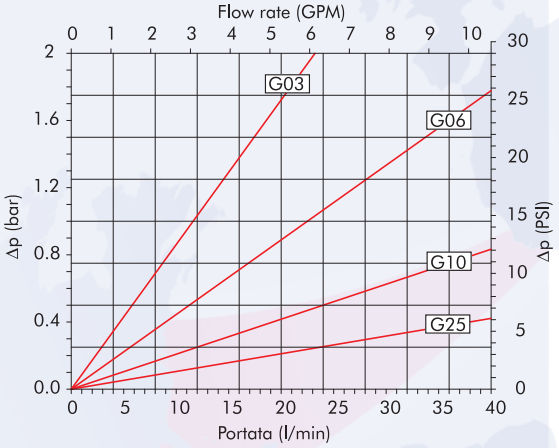

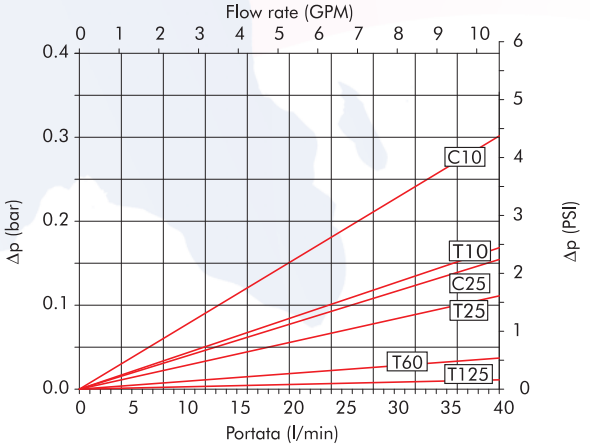

D-3-11-..-A

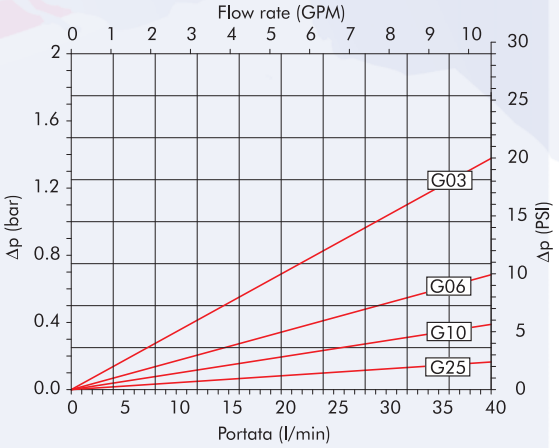

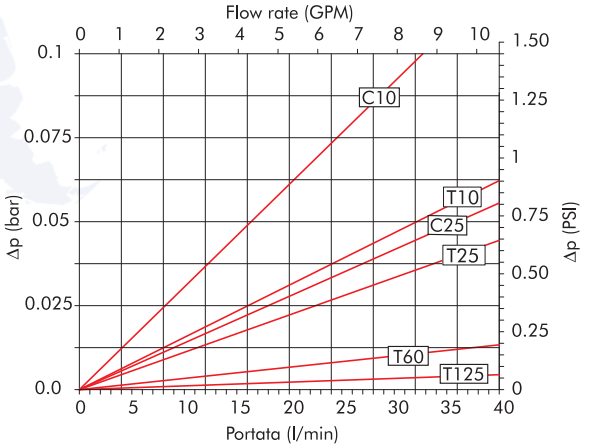

50% OFF ALL PRICES

FILTRAZIONE IDRAULICA
HYDRAULIC FILTRATION

FILTREC®
Technical Filtration

serie
F160-XD

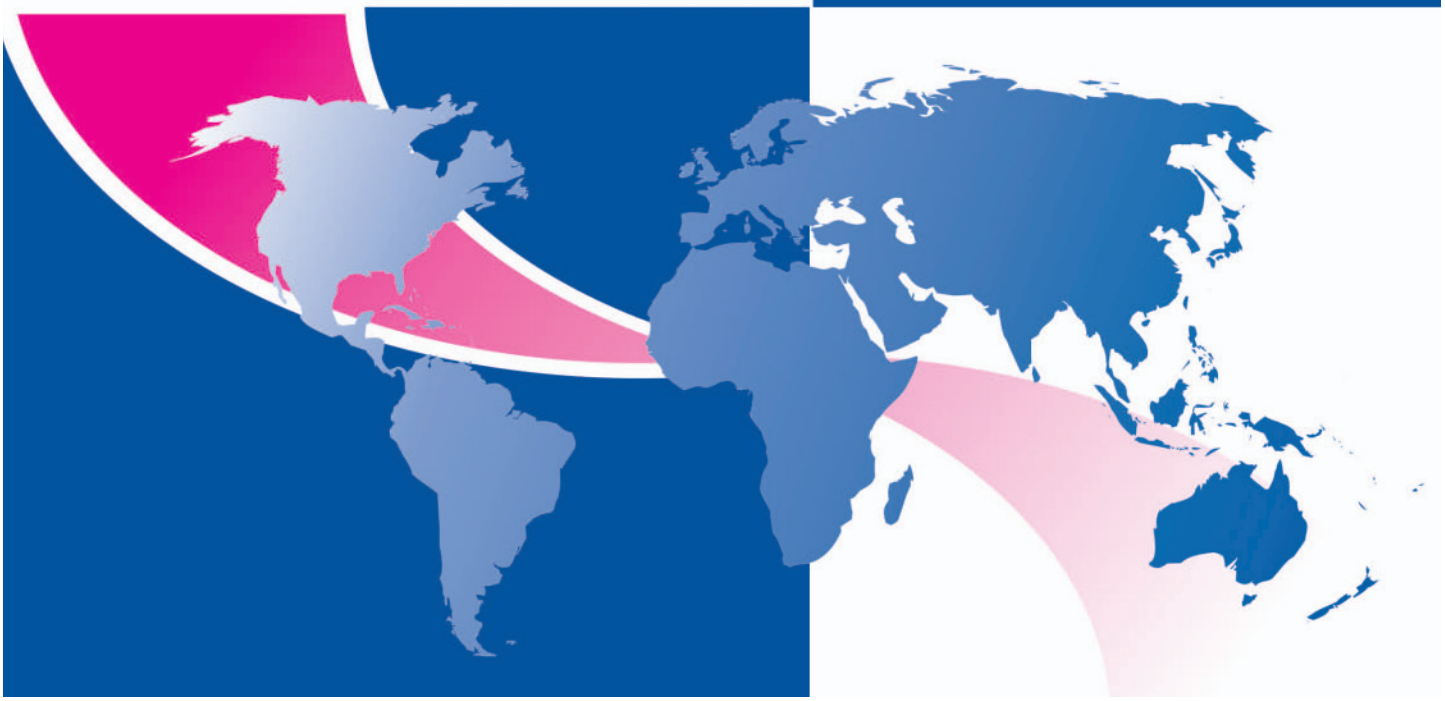

F160-XD040 / 063 / 100

F160-XD160 / 250 / 400

50% OFF ALL PRICES

Serie F160

Filtri in linea per media pressione
In line medium pressure filters

FILTER HOUSING

Technical Information

Description:	*In line medium pressure filter assembly with cleanable or disposable elements*
Max flow rate:	*400 l/min (105.5 gpm)*
Max working pressure:	*As per NFPA T 3.10.5.1: 160 Bar (2320 psi)*
Test pressure:	*As per NFPA T 3.10.5.1: 240 Bar (3480 psi)*
Burst pressure:	*As per NFPA T 3.10.5.1: 480 Bar (6962 psi)*
Connection Ports:	*BSP, NPT*
By-pass:	*No By-pass or 6 Bar (87 psi) setting*
Working temperature:	*-25°C +120°C (-13°F +248°F)*
Materials:	• *Head: Cast iron* • *Bowl: Aluminium* • *Seal: Buna-N / Viton®*
Fluids compatibility:	*ISO 2943: Filter assembly compatible with mineral oils and some synthetic or vegetable oils. With other fluid applications please contact Filtrec S.p.A.*

FILTER ELEMENT

	Filter element dimensions according to DIN 24550
Filter media:	*Microglass fiber 3, 6, 10, 15, 25 µ, cellulose 10 µ*
Collapse pressure:	*As per ISO 2941: 21 Bar (305 psi) and 210 Bar (3045 psi)*

DESCRIPTION	ORDER CODE	MEDIA	PORTS	FLOW RATE	PRICE	ELEMENT	PRICE
COMPLETE WITH LOW COLLAPSE ELEMENTS, VISUAL INDICATOR AND BYPASS VALVE							
F160-XD040-G10-A-B5-D-S-Z30	ZZ004932	10 MICRON FIBREGLASS	1" BSP	40 L/MIN	£273.55	XD040G10A	£84.88
F160-XD063-G10-A-B5-D-S-Z30	ZZ004933	10 MICRON FIBREGLASS	1" BSP	60 L/MIN	£283.20	XD063G10A	£89.21
F160-XD100-G10-A-B5-D-S-Z30	ZZ004934	10 MICRON FIBREGLASS	1" BSP	100 L/MIN	£300.82	XD100G10A	£99.25
F160-XD160-G10-A-B7-D-S-Z30	ZZ004935	10 MICRON FIBREGLASS	1 1/2" BSP	160 L/MIN	£461.10	XD160G10A	£120.84
F160-XD250-G10-A-B7-D-S-Z30	ZZ004936	10 MICRON FIBREGLASS	1 1/2" BSP	250 L/MIN	£487.68	XD250G10A	£120.84
F160-XD400-G10-A-B7-D-S-Z30	ZZ004937	10 MICRON FIBREGLASS	1 1/2" BSP	400 L/MIN	£618.53	XD400G10A	£219.16
F160-XD063-G25-A-B3-D-S-Z30	ZZ004938	25 MICRON FIBREGLASS	1/2" BSP	60 L/MIN	£283.20	XD063G25A	£89.21
F160-XD063-G25-A-B5-D-S-Z30	ZZ004939	25 MICRON FIBREGLASS	1" BSP	100 L/MIN	£283.20	XD063G25A	£89.21
F160-XD100-G25-A-B5-D-S-Z30	ZZ004940	25 MICRON FIBREGLASS	1" BSP	160 L/MIN	£300.82	XD100G25A	£99.25
F160-XD160-G25-A-B7-D-S-Z30	ZZ004941	25 MICRON FIBREGLASS	1 1/2" BSP	200 L/MIN	£461.10	XD160G25A	£120.84
F160-XD250-G25-A-B7-D-S-Z30	ZZ004942	25 MICRON FIBREGLASS	1 1/2" BSP	300 L/MIN	£487.68	XD250G25A	£120.84
F160-XD400-G25-A-B7-D-S-Z30	ZZ004943	25 MICRON FIBREGLASS	1 1/2" BSP	400 L/MIN	£816.67	XD400G25A	£219.16

THE GIVEN FLOW RATE VALUES REFER TO APPLICATIONS WITH MINERAL OIL HAVING VISCOSITY OF 30 CST AT WORKING TEMPERATURE. FOR APPLICATIONS WITH DIFFERENT FLUID OR WORKING CONDITIONS, A CORRECTIVE FACTOR MUST BE APPLIED BY REFERING TO THE TECHNICAL INFORMATION.

OPTIONAL EXTRAS

INDICATORS	PRICE
Z31 DIFFERENTIAL ELECTRICAL VISUAL 5 BAR 72.5PSI	£65.13
Z32 DIFFERENTIAL VISUAL SWITCH 8 BAR 116 PSI	£47.32
Z33 DIFFERENTIAL ELECTRICAL VISUAL 8 BAR 116 PSI	£65.13

Informazioni dimensionali - *Overall dimensions*

F160-XD040 / 063 / 100

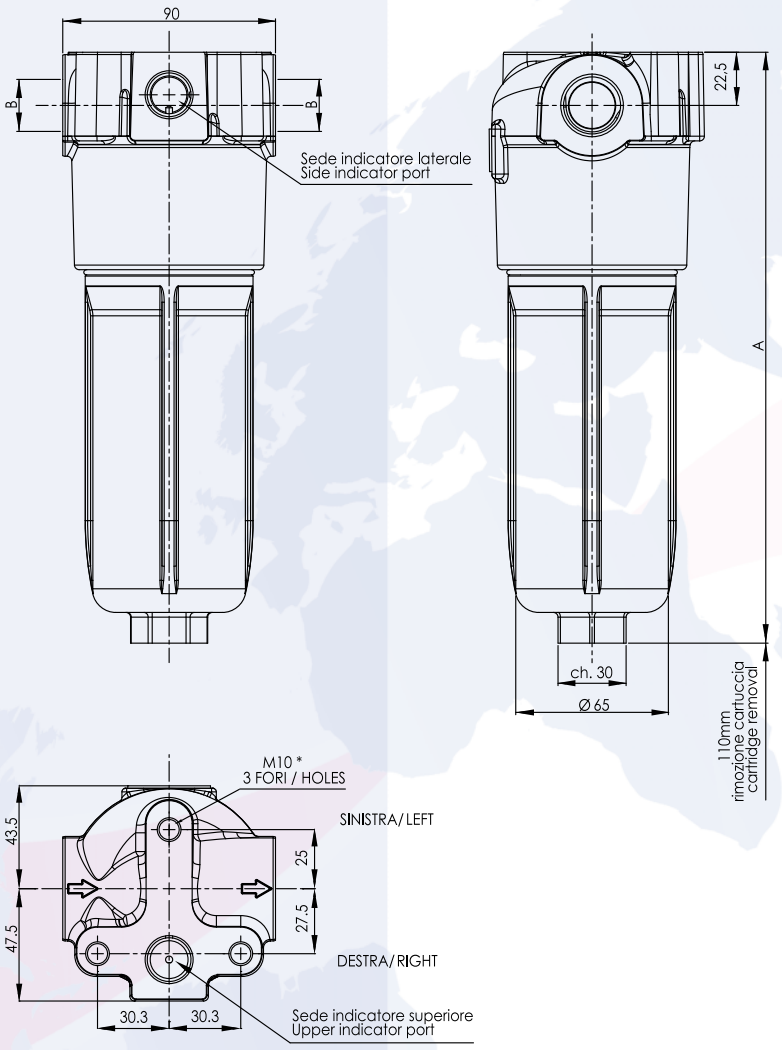

1) Grandezza nominale - *Nominal size*

Codice - *Code*	A	B	Cart. ricambio- *Element*
F160-XD040	180	1/2" BSP	XD-040
F160-XD063	250	3/4" BSP	XD-063
F160-XD100	329	1" BSP	XD-100

Per NPT contattare l'ufficio commerciale
For NPT please contact sales department

*Per fori di fissaggio UN contattare l'ufficio commerciale
**For UN thread fixing for holes please contact sales department*

50% OFF ALL PRICES

Informazioni dimensionali - *Overall dimensions*

F160-XD160 / 250 / 400

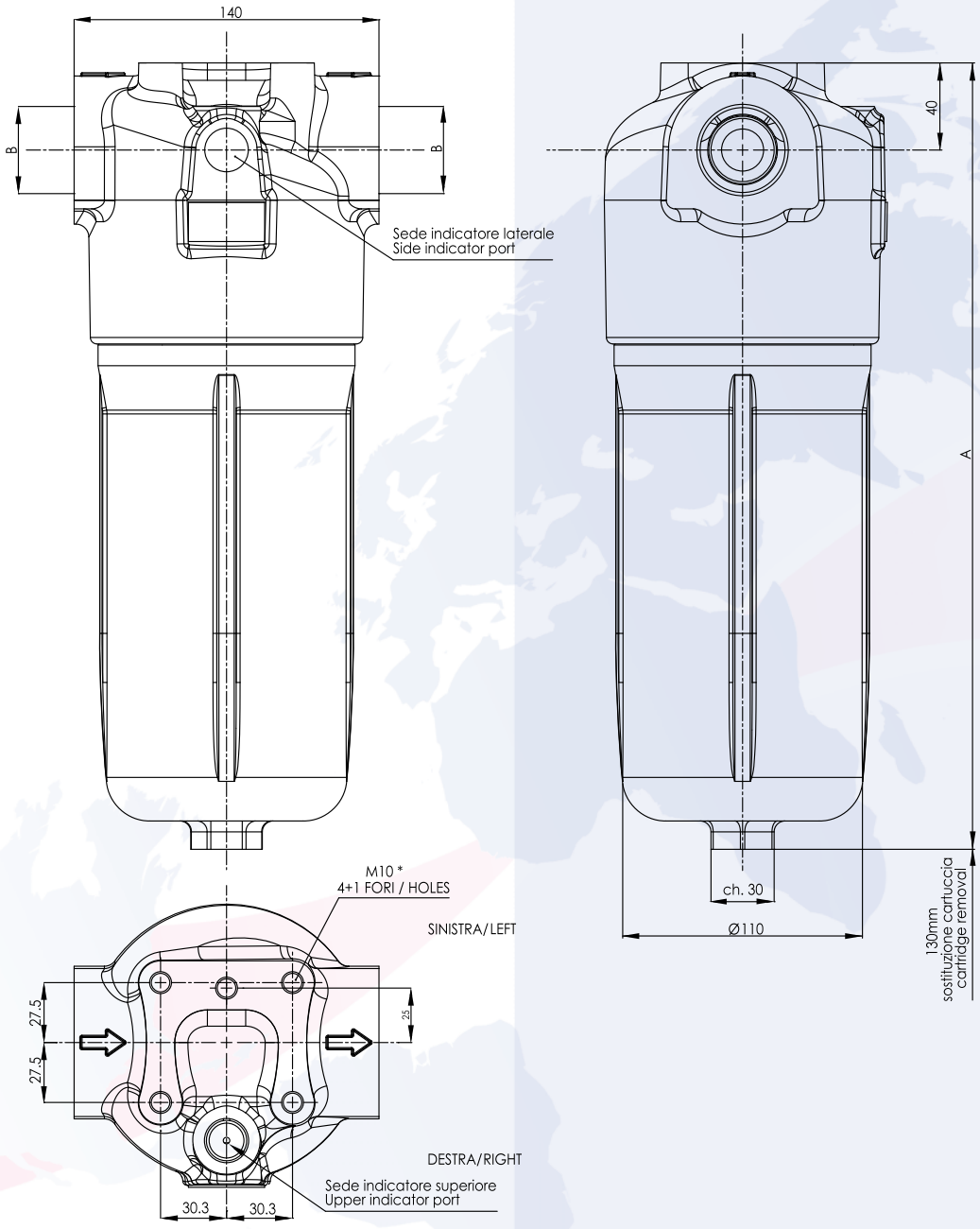

1) Grandezza nominale - *Nominal size*

Codice - *Code*	A	B	Cart. ricambio- *Element*
F160-XD160	289	1" 1/4 BSP / NPT 1" 1/2 BSP / NPT	XD-160
F160-XD250	361		XD-250
F160-XD400	514		XD-400

Per NPT contattare l'ufficio commerciale
For NPT please contact sales department

*Per fori di fissaggio UN contattare l'ufficio commerciale
**For UN thread fixing for holes please contact sales department*

2) Grado di filtrazione - *Filtration ratings*

Codice - *Code*	Materiale - *Media*	Efficienza - *Efficiency*
0	senza cartuccia / *no element*	------
G03	microfibra inorganica / *microglass fiber*	$\beta_{4,5\ \mu m\ (c)} \geq 1000$
G06	microfibra inorganica / *microglass fiber*	$\beta_{7\ \mu m\ (c)} \geq 1000$
G10	microfibra inorganica / *microglass fiber*	$\beta_{12\ \mu m\ (c)} \geq 1000$
G15	microfibra inorganica / *microglass fiber*	$\beta_{18\ \mu m\ (c)} \geq 1000$
G25	microfibra inorganica / *microglass fiber*	$\beta_{27\ \mu m\ (c)} \geq 1000$
C10	carta / *cellulose*	$\beta_{10\ \mu m\ (c)} \geq 2$

Solo Δp 21 Bar
Δp 21 Bar (305 psi) only

3) Collasso cartuccia - *Element collapse*

Codice - *Code*	Δp (Bar) - Δp(psi)
A	21Bar / *305 psi*
B	210Bar / *3045 psi*

4) Guarnizioni - *Seals*

Codice - *Code*	Tipo - *Type*
---	NBR
V	Viton®

5) Connessioni - *Connection port*

Codice - *Code*	**B**	**C**
B3	1/2" BSP	M10
B4	3/4" BSP	M10
B5	1" BSP	M10
B6	1" 1/4 BSP	M10
B7	1" 1/2 BSP	M10
N3	1/2" NPT	3/8-16 UNC - 2B
N4	3/4" NPT	3/8-16 UNC - 2B
N5	1" NPT	3/8-16 UNC - 2B
N6	1" 1/4 NPT	3/8-16 UNC - 2B
N7	1" 1/2 NPT	3/8-16 UNC - 2B

Su richiesta - *On request*

6) Valvola di by-pass - *By-pass valve*

Codice - *Code*	Taratura - *Setting*
0	senza / *without*
D	6 Bar / *87 psi*

50% OFF ALL PRICES

7) Predisposizione indicatori - *Indicator port options*

Codice - *Code*	Posizione - *Position*
0	senza / *without*
T	lavorazione per indicatore lato destro con tappo di chiusura *indicator port on the right side with plug*
S	lavorazione per indicatore superiore con tappo di chiusura *upper indicator port side with plug*

Su richiesta - *On request*

8) Indicatori - *Indicator*

Codice - *Code*	Tipo indicatore - *Indicator type*	Taratura - *Setting*
0	senza / *without*	------
Z30	differenziale visivo *differential visual switch*	5 Bar *72.5 psi*
Z31	differenziale visivo elettrico *differential electrical visual*	5 Bar *72.5 psi*
Z32	differenziale visivo *differential visual switch*	8 Bar *116 psi*
Z33	differenziale visivo elettrico *differential electrical visual*	8 Bar *116 psi*

Codici per l'ordinazione - *Ordering information*

Filtro completo
Filter assembly

F160-XD	100	G10	A	V	B3	D	S	Z31
	1*	2*	3*	4*	5*	6*	7*	8*

Cartuccia
Filter element

XD	100	G10	A	V
	1*	2*	3*	4*

* Viton® è un marchio registrato da DuPont - *Viton® is a registered trademark of DuPont*
Sono possibili variazioni al catalogo senza preavviso - *Catalogue may change without notice*

Curve di portata - *Pressure drop charts*

Le curve (secondo ISO 3968 classe B) sono ottenute con olio minerale avente viscosità di 30 cSt e densità di 0,86 Kg/dm³. Per viscosità e densità diverse i dati variano.

Pressure drop charts (as per ISO 3968 class B)are obtained using mineral oil with 30 cSt viscosity and 0,86 Kg/dm³ density. With different values of viscosity and density data may vary.

Filtro F100-XD040-063-100
Housing F100-XD040-063-100

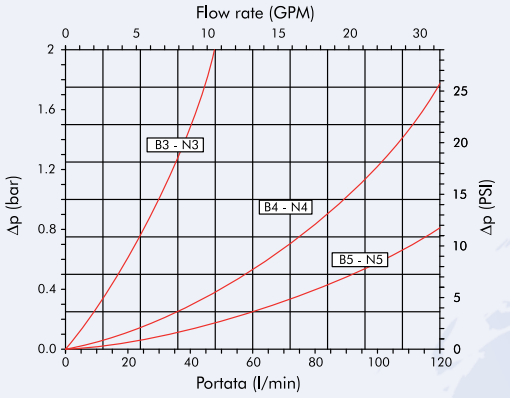

By-pass F100-XD040-063-100
By-pass F100-XD040-063-100

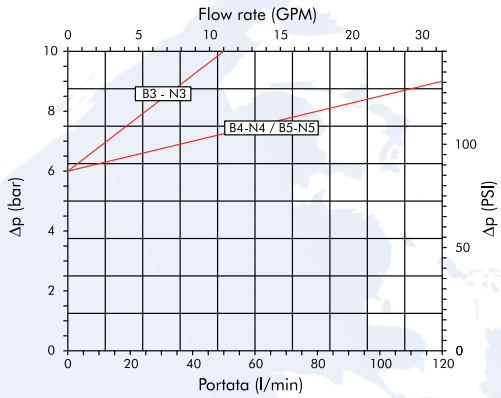

XD-040-...-A

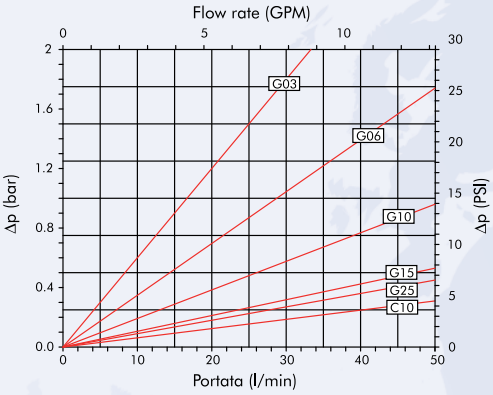

XD-040-...-B

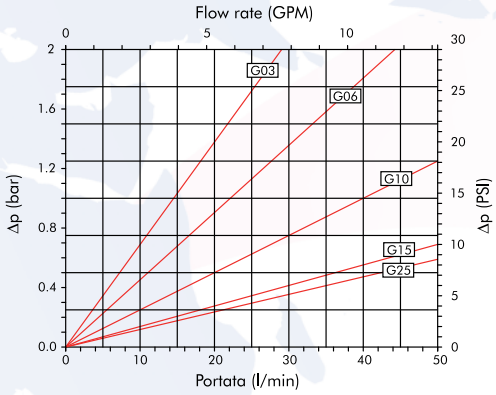

XD-063-...-A

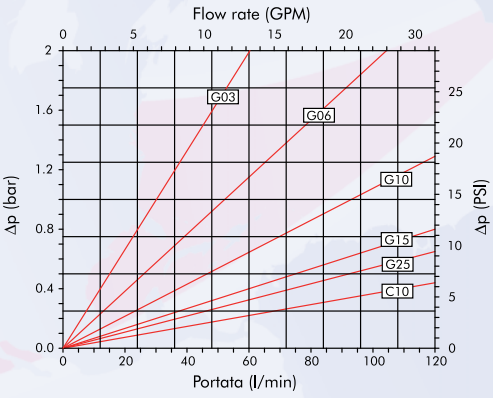

XD-063-...-B

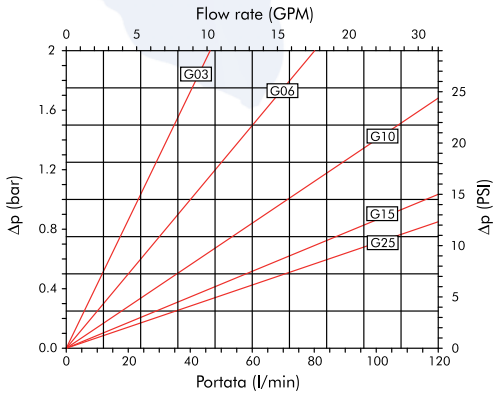

XD-100-...-A

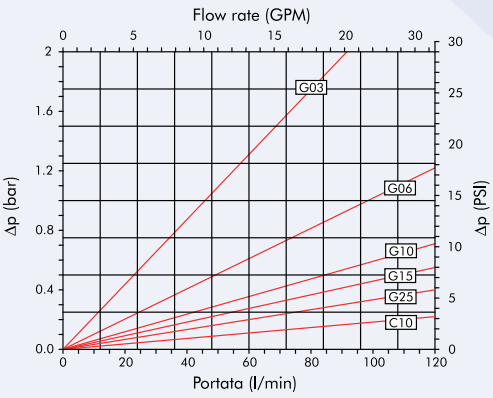

XD-100-...-B

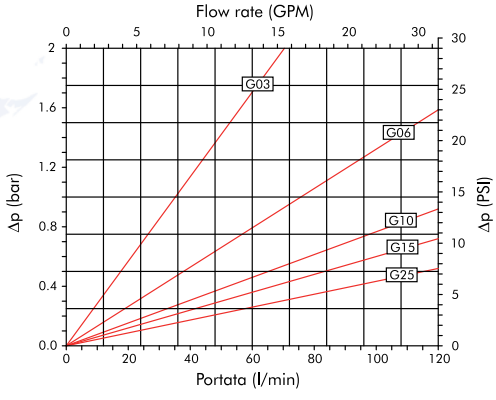

50% OFF ALL PRICES

Filtro F160-XD160-250-400
Housing F160-XD160-250-400

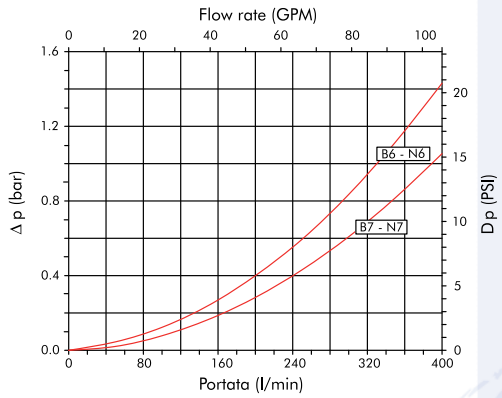

By-pass F160-XD160-250-400
By-pass F160-XD160-250-400

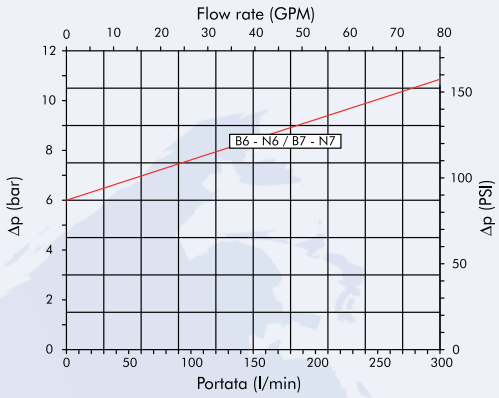

XD-160-...-A

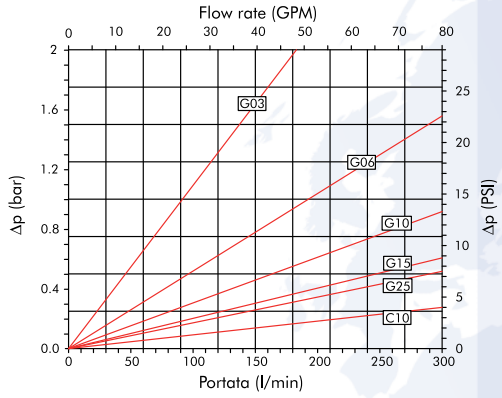

XD-160-...-B

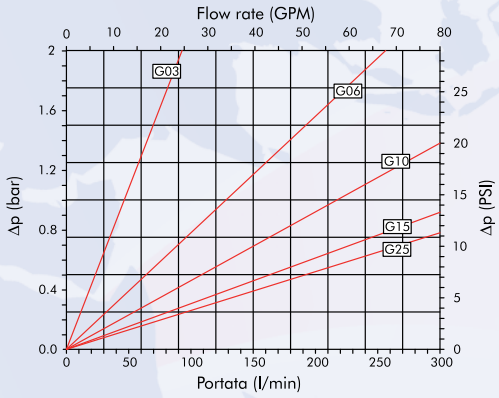

XD-250-...-A

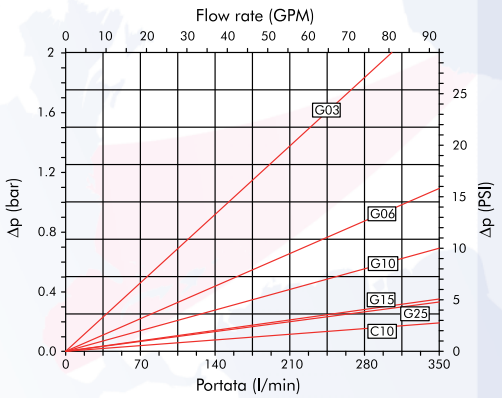

XD-250-...-B

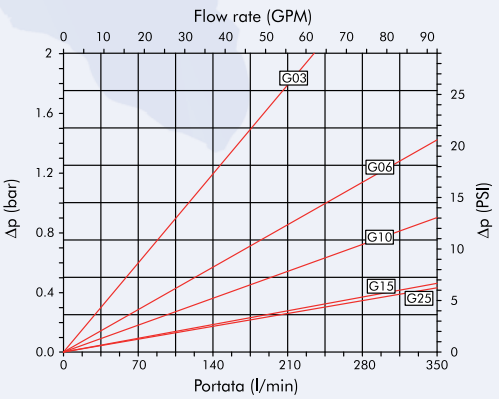

XD-400-...-A

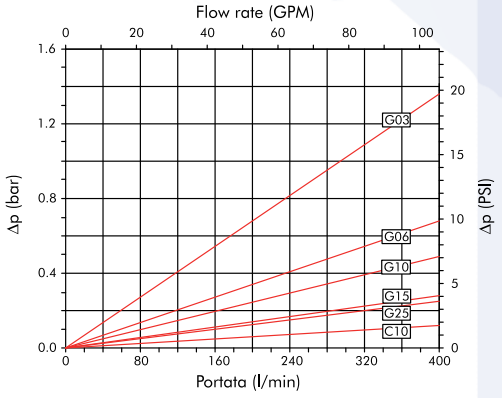

XD-400-...-B

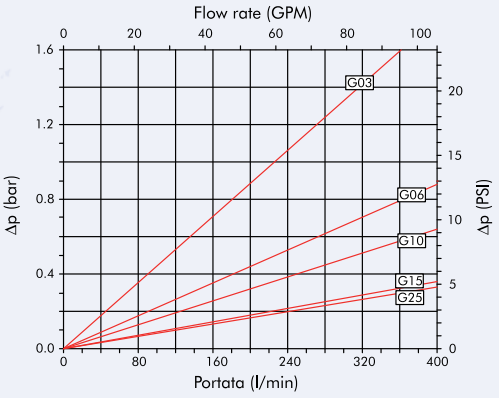

FILTRAZIONE IDRAULICA
HYDRAULIC FILTRATION

FILTREC®
Technical Filtration

serie
F280-D1

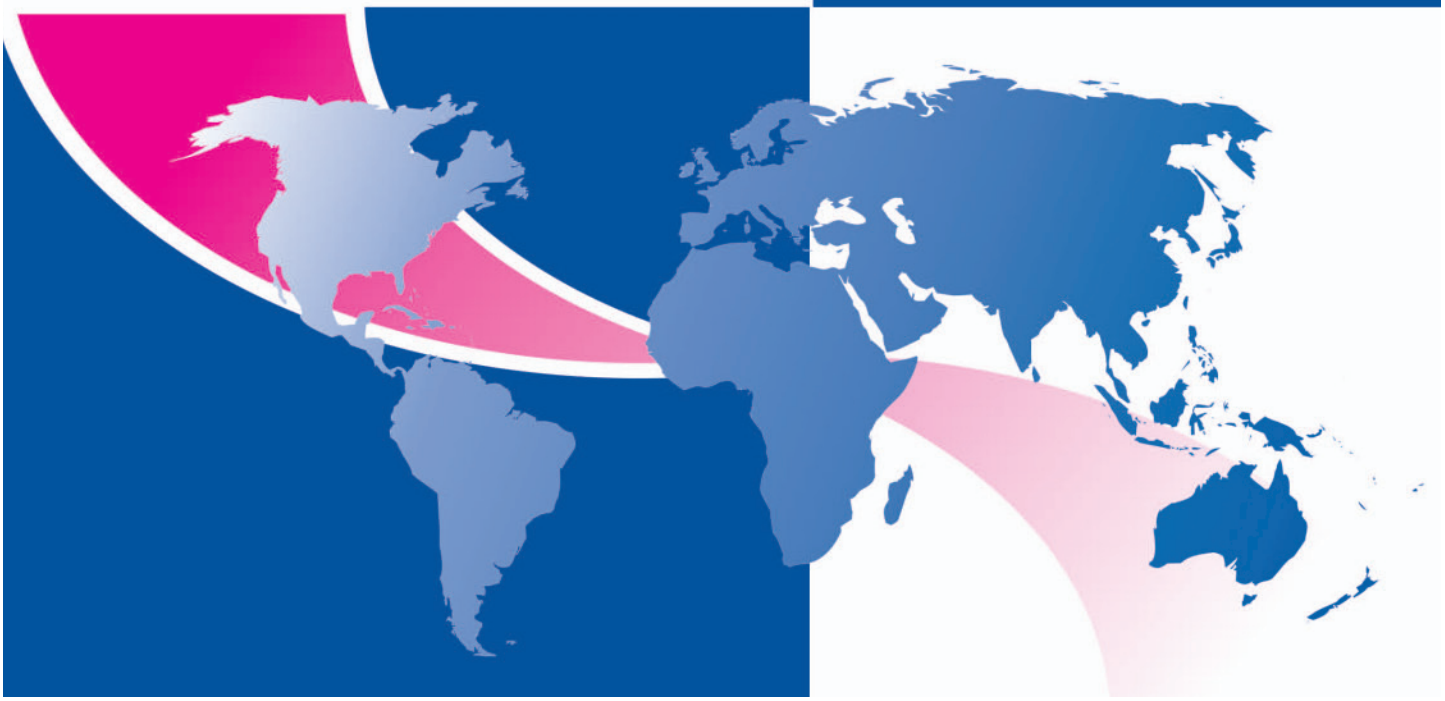

50% OFF ALL PRICES

F280-D120 / D124 / D121

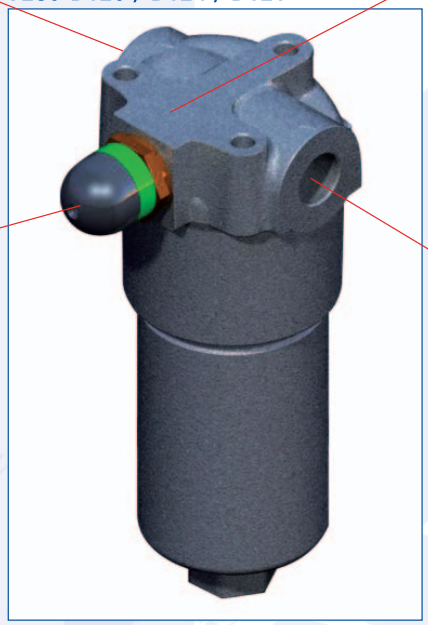

F280-D140 / D141 / D142 / D143

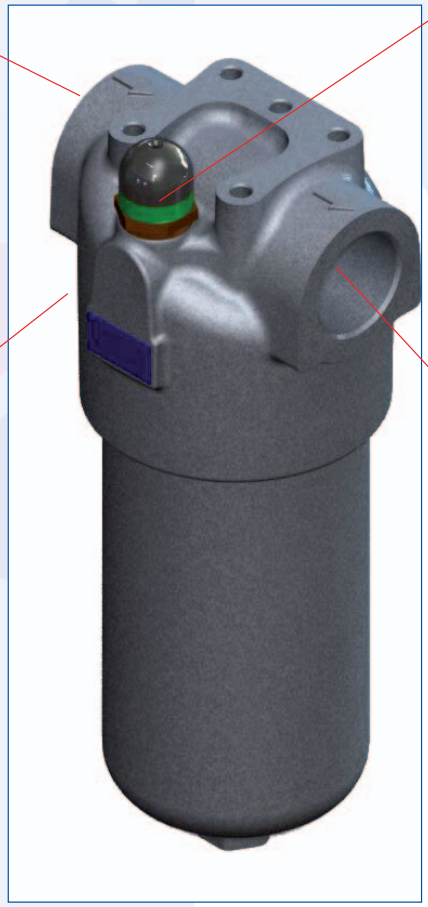

Serie F280-D1

Filtri in linea per le alte pressioni
In line high pressure filters

FILTER HOUSING

Technical Information

Description:	*In line high pressure filter assembly with cleanable or disposable elements*
Max flow rate:	*400 l/min (105 gpm)*
Max working pressure:	*As per NFPA T 3.10.5.1: 280 Bar (4060 psi)*
Test pressure:	*As per NFPA T 3.10.5.1: 420 Bar (6091,5 psi)*
Burst pressure:	*As per NFPA T 3.10.5.1: 840 Bar (12180 psi)*
Connection Ports:	*BSP, NPT, Metric*
By-pass:	*No by-pass or 6 Bar (87 psi) setting*
Working temperature:	*-25°C +120°C (-13°F +248°F)*
Materials:	• *Head: cast iron* • *Bowl: extruded steel* • *Seal: Buna-N / Viton®*
Fluids compatibility:	*ISO 2943: Filter assembly compatible with mineral oils and some synthetic or vegetable oils. With other fluid applications please contact Filtrec S.p.A.*

FILTER ELEMENT

Filter media:	*Microglass fiber 3, 6, 10, 15, 25 µm, cellulose 10 µm*
Collapse pressure:	*As per ISO 2941: 21 Bar (305 psi) and 210 Bar (3045 psi)*

DESCRIPTION	ORDER CODE	MEDIA	PORTS	FLOW RATE	PRICE	ELEMENT	PRICE
COMPLETE WITH LOW COLLAPSE ELEMENTS, VISUAL INDICATOR AND BYPASS VALVE							
F280-D120-G10-A-B5-D-S-Z30	ZZ004944	10 MICRON FIBREGLASS	1" BSP	60 L/MIN	£241.55	D120G10A	£58.85
F280-D124-G10-A-B5-D-S-Z30	ZZ004945	10 MICRON FIBREGLASS	1" BSP	80 L/MIN	£256.99	D124G10A	£68.78
F280-D121-G10-A-B5-D-S-Z30	ZZ004946	10 MICRON FIBREGLASS	1" BSP	100 L/MIN	£270.34	D121G10A	£82.03
F280-D140-G10-A-B7-D-S-Z30	ZZ004947	10 MICRON FIBREGLASS	1 1/2" BSP	120 L/MIN	£521.22	D140G10A	£87.13
F280-D141-G10-A-B7-D-S-Z30	ZZ004948	10 MICRON FIBREGLASS	1 1/2" BSP	200 L/MIN	£589.36	D141G10A	£119.95
F280-D142-G10-A-B7-D-S-Z30	ZZ004949	10 MICRON FIBREGLASS	1 1/2" BSP	240 L/MIN	£796.23	D142G10A	£193.61
F280-D120-G25-A-B5-D-S-Z30	ZZ004950	25 MICRON FIBREGLASS	1" BSP	70 L/MIN	£239.90	D120G25A	£56.74
F280-D124-G25-A-B5-D-S-Z30	ZZ004951	25 MICRON FIBREGLASS	1" BSP	90 L/MIN	£256.99	D124G25A	£68.78
F280-D121-G25-A-B5-D-S-Z30	ZZ004952	25 MICRON FIBREGLASS	1" BSP	110 L/MIN	£266.53	D121G25A	£77.25
F280-D140-G25-A-B7-D-S-Z30	ZZ004953	25 MICRON FIBREGLASS	1 1/2" BSP	130 L/MIN	£514.31	D140G25A	£78.50
F280-D141-G25-A-B7-D-S-Z30	ZZ004954	25 MICRON FIBREGLASS	1 1/2" BSP	210 L/MIN	£589.36	D141G25A	£119.95
F280-D142-G25-A-B7-D-S-Z30	ZZ004955	25 MICRON FIBREGLASS	1 1/2" BSP	250 L/MIN	£794.15	D142G25A	£191.00

THE GIVEN FLOW RATE VALUES REFER TO APPLICATIONS WITH MINERAL OIL HAVING VISCOSITY OF 30 CST AT WORKING TEMPERATURE. FOR APPLICATIONS WITH DIFFERENT FLUID OR WORKING CONDITIONS, A CORRECTIVE FACTOR MUST BE APPLIED BY REFERING TO THE TECHNICAL INFORMATION.

OPTIONAL EXTRAS

INDICATORS	PRICE
Z31 DIFFERENTIAL ELECTRICAL VISUAL 5 BAR 72.5PSI	£65.13
Z32 DIFFERENTIAL VISUAL SWITCH 8 BAR 116 PSI	£47.32
Z33 DIFFERENTIAL ELECTRICAL VISUAL 8 BAR 116 PSI	£65.13

50% OFF ALL PRICES

Informazioni dimensionali - *Overall dimensions*

F280-D1/20-24-21

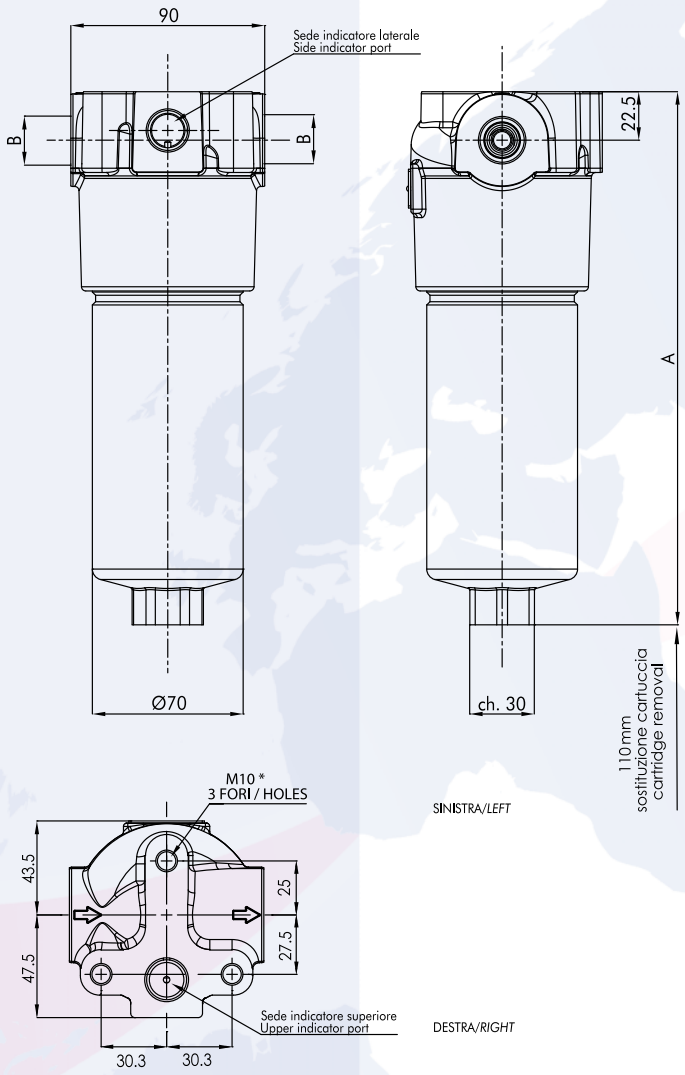

1) **Grandezza nominale** - *Nominal size*

Codice - *Code*	A	B	Cart. ricambio- *Element*
F280-D120	200	1/2″ BSP	D-1-20
F280-D124	243	3/4″ BSP	D-1-24
F280-D121	293	1″ BSP M22 x 1,5	D-1-21

Per NPT e M22 x 1,5 contattare l'ufficio commerciale
For NPT and M22 x 1,5 please contact sales department

*Per fori di fissaggio UN contattare l'ufficio commerciale
**For UN thread fixing for holes please contact sales department*

Informazioni dimensionali - *Overall dimensions*

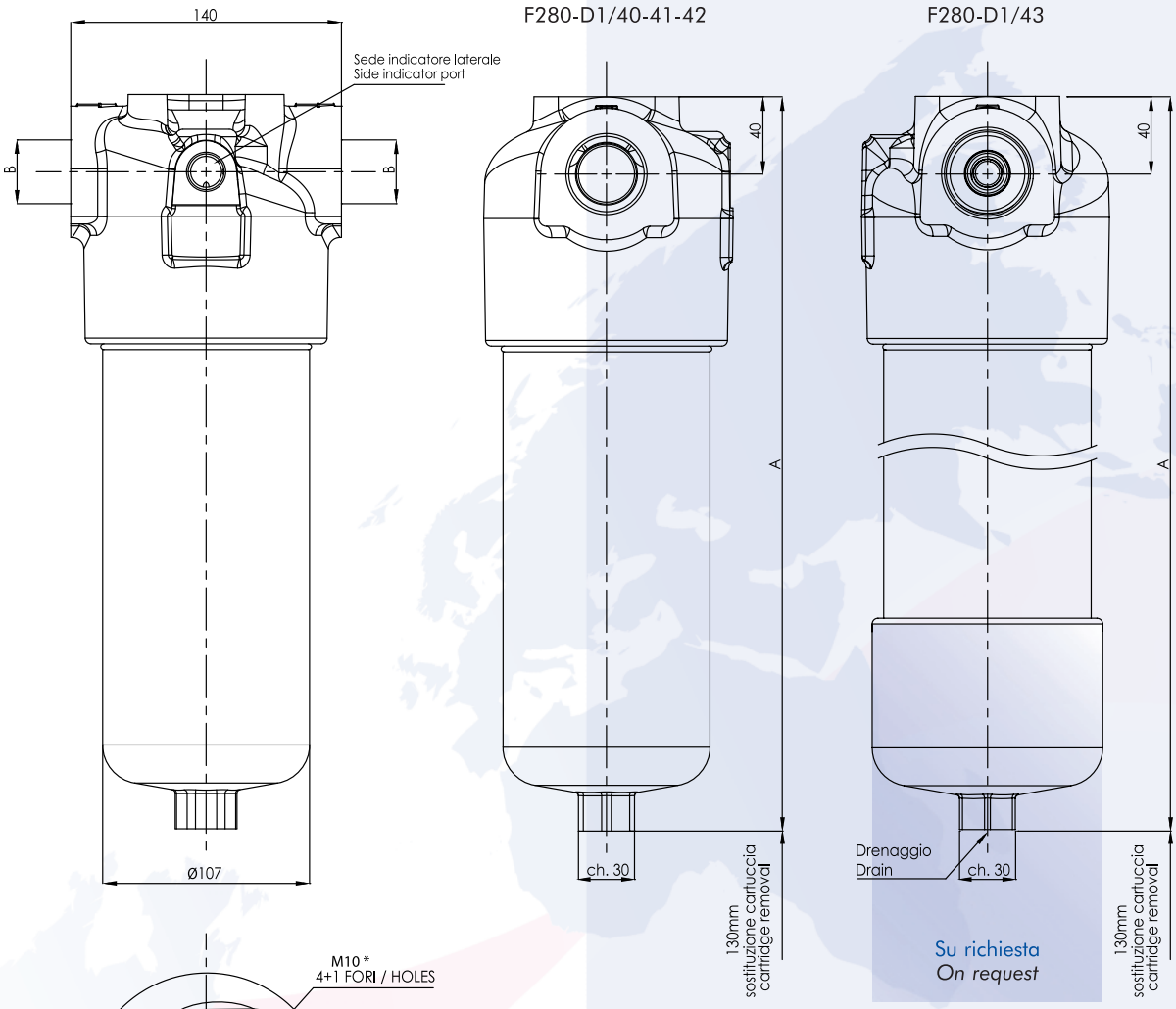

1) Grandezza nominale - *Nominal size*

Codice - *Code*	A	B	Cart. ricambio- *Element*
F280-D140	248	1″ 1/4 BSP 1″ 1/2 BSP	D-1-40
F280-D141	341		D-1-41
F280-D142	461		D-1-42
F280-D143*	554		D-1-43

*Contattare l'ufficio commerciale
**Please contact sales department*

Per NPT contattare l'ufficio commerciale
For NPT please contact sales department

*Per fori di fissaggio UN contattare l'ufficio commerciale
**For UN thread fixing for holes please contact sales department*

50% OFF ALL PRICES

2) Grado di filtrazione - *Filtration ratings*

Codice - *Code*	Materiale - *Media*	Efficienza - *Efficiency*
0	senza cartuccia / *no element*	------
G03	microfibra inorganica / *microglass fiber*	$\beta_{4,5\ \mu m\ (c)} \geq 1000$
G06	microfibra inorganica / *microglass fiber*	$\beta_{7\ \mu m\ (c)} \geq 1000$
G10	microfibra inorganica / *microglass fiber*	$\beta_{12\ \mu m\ (c)} \geq 1000$
G15	microfibra inorganica / *microglass fiber*	$\beta_{18\ \mu m\ (c)} \geq 1000$
G25	microfibra inorganica / *microglass fiber*	$\beta_{27\ \mu m\ (c)} \geq 1000$
C10	carta / *cellulose*	$\beta_{10\ \mu m\ (c)} \geq 2$

Solo Δp 21 Bar
Δp 21 Bar (305 psi) only

3) Collasso cartuccia - *Element collapse*

Codice - *Code*	Δ p (Bar) - Δp(psi)
A	21Bar / *305 psi*
B	210Bar / *3045 psi*

4) Guarnizioni - *Seals*

Codice - *Code*	Tipo - *Type*
---	NBR
V	Viton®

5) Connessioni - *Connection port*

Codice - *Code*	B	C
B3	1/2" BSP	M10
B4	3/4" BSP	M10
B5	1" BSP	M10
B6	1" 1/4 BSP	M10
B7	1" 1/2 BSP	M10
N3	1/2" NPT	3/8 - 16 UNC - 2B
N4	3/4" NPT	3/8 - 16 UNC - 2B
N5	1" NPT	3/8 - 16 UNC - 2B
N6	1" 1/4 NPT	3/8 - 16 UNC - 2B
N7	1" 1/2 NPT	3/8 - 16 UNC - 2B
M22	M22 x 1,5	M10

Su richiesta - *On request*

6) Valvola di by-pass - *By-pass valve*

Codice - *Code*	Taratura - *Setting*
0	senza / *without*
D	6 Bar / *87 psi*

7) Predisposizione indicatori - *Indicator port options*

Codice - *Code*	Posizione - *Position*
0	senza / *without*
T	lavorazione per indicatore lato destro con tappo di chiusura *indicator port on the right side with plug*
S	lavorazione per indicatore superiore con tappo di chiusura *upper indicator port side with plug*

Su richiesta - *On request*

8) Indicatori - *Indicator*

Codice - *Code*	Tipo indicatore - *Indicator type*	Taratura - *Setting*
0	senza / *without*	------
Z30	differenziale visivo *differential visual switch*	5 Bar *72.5 psi*
Z31	differenziale visivo elettrico *differential electrical visual*	5 Bar *72.5 psi*
Z32	differenziale visivo *differential visual switch*	8 Bar *116 psi*
Z33	differenziale visivo elettrico *differential electrical visual*	8 Bar *116 psi*

Codici per l'ordinazione - *Ordering information*

Filtro completo
Filter assembly

F280-D1

20	G10	A	V	B3	D	S	Z30
1*	2*	3*	4*	5*	6*	7*	8*

Cartuccia
Filter element

D-1

20	G10	A	V
1*	2*	3*	4*

* Viton® è un marchio registrato da DuPont - *Viton® is a registered trademark of DuPont*
Sono possibili variazioni al catalogo senza preavviso - *Catalogue may change without notice*

50% OFF ALL PRICES

Curve di portata - *Pressure drop charts*

Le curve (secondo ISO 3968 classe B) sono ottenute con olio minerale avente viscosità di 30 cSt e densità di 0,86 Kg/dm³. Per viscosità e densità diverse i dati variano.

Pressure drop charts (as per ISO 3968 class B) are obtained using mineral oil with 30 cSt viscosity and 0,86 Kg/dm³ density. With different values of viscosity and density data may vary.

Filtro F280-D1-20/24/21
Housing F280-D1-20/24/21

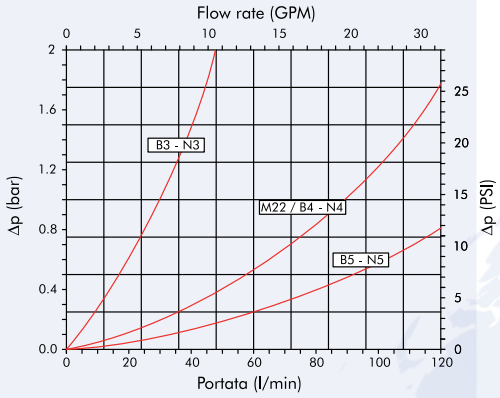

By-pass F280-D1-20/24/21
By-pass F280-D1-20/24/21

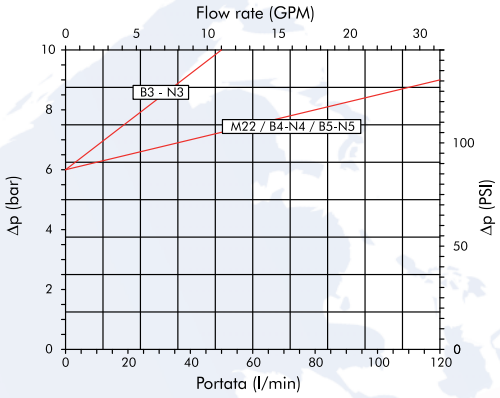

D1-20-A

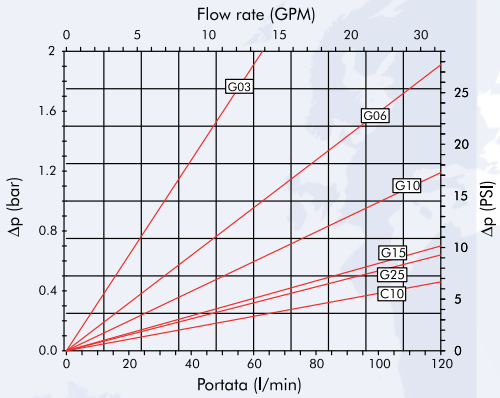

D1-20-B

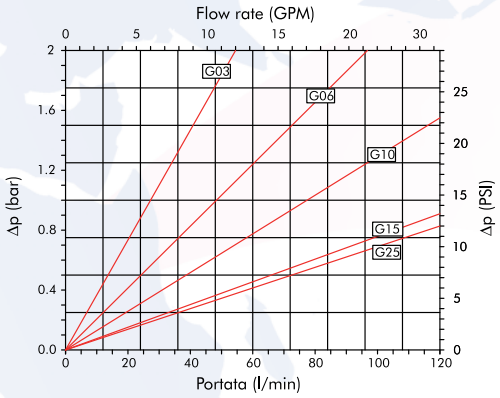

D1-24-A

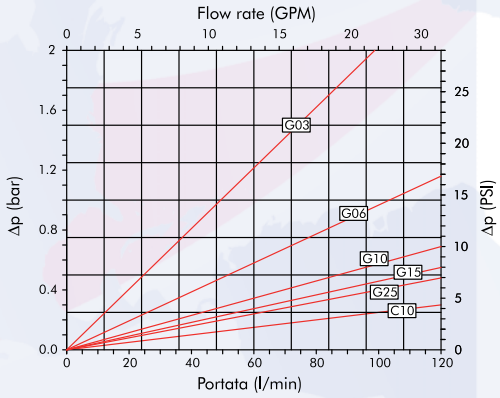

D1-24-B

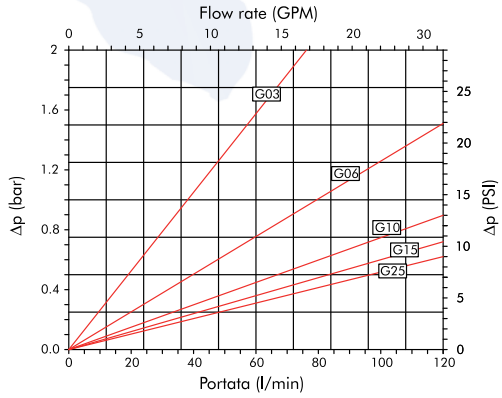

D1-21-A

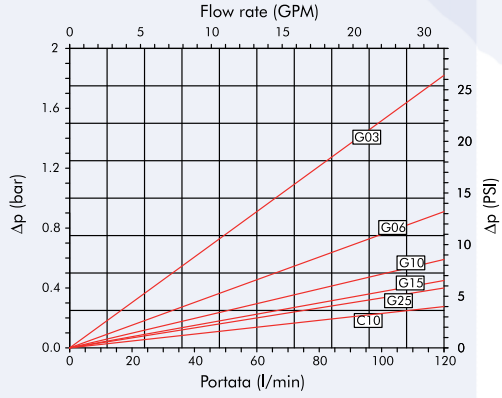

D1-21-B

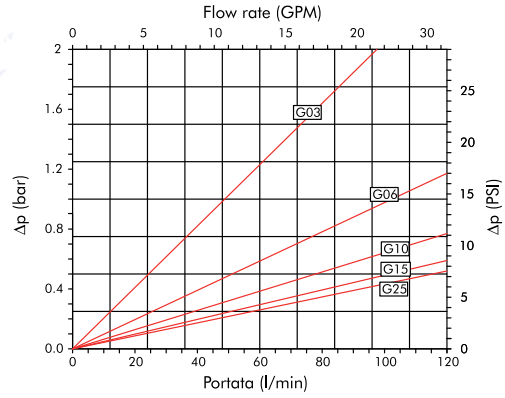

Filtro F280-D1-40/41/42/43
Housing F280-D1-40/41/42/43

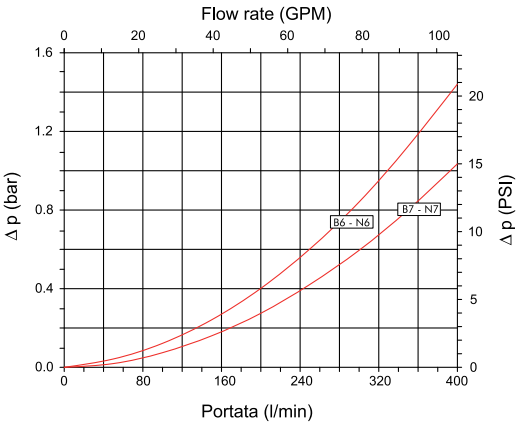

By-pass F280-D1-40/41/42/43
By-pass F280-D1-40/41/42/43

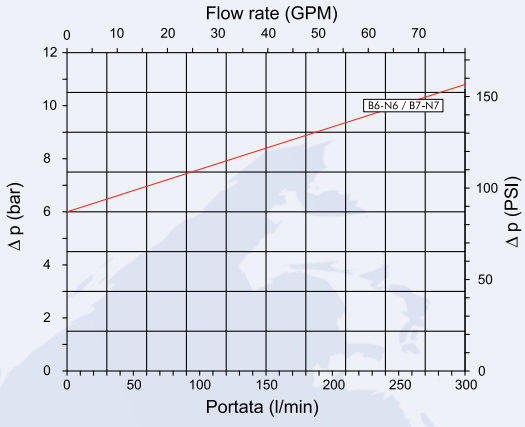

D1-40-A

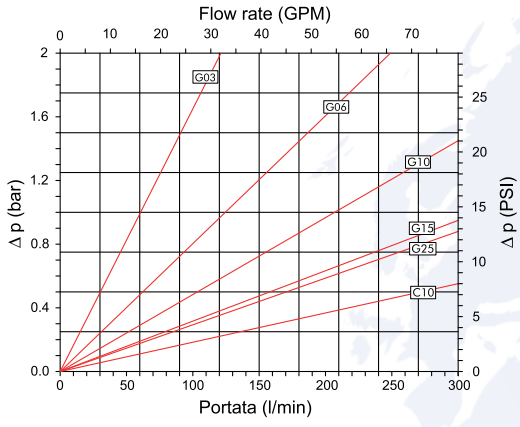

D1-40-B

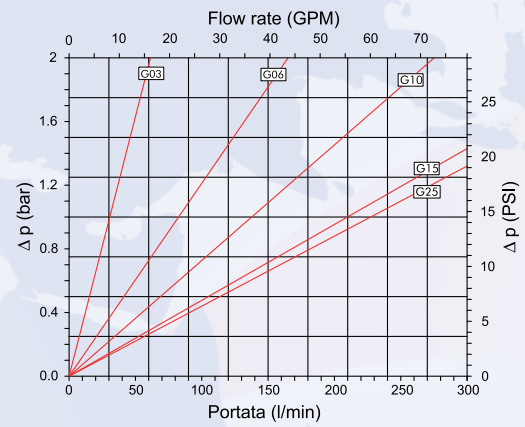

D1-41-A

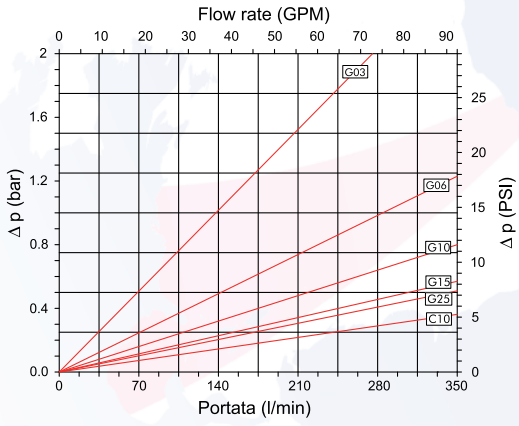

D1-41-B

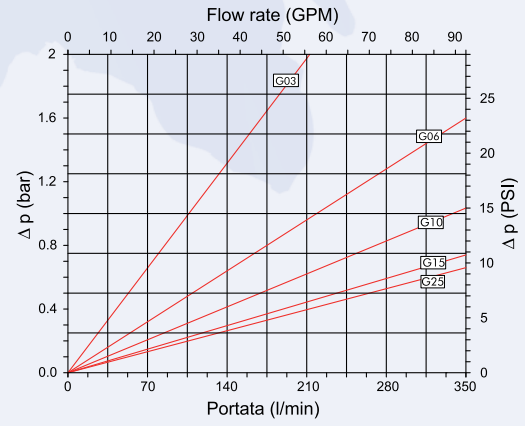

D1-42-A

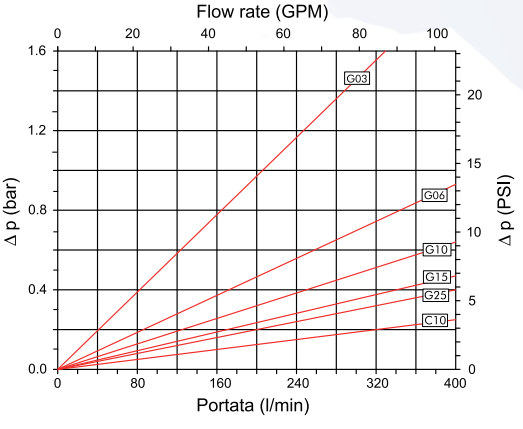

D1-42-B

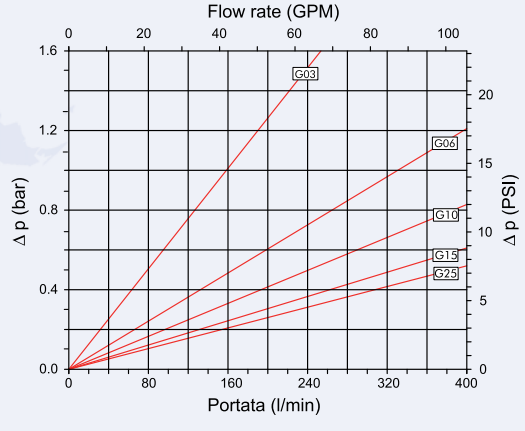

D1-43-A

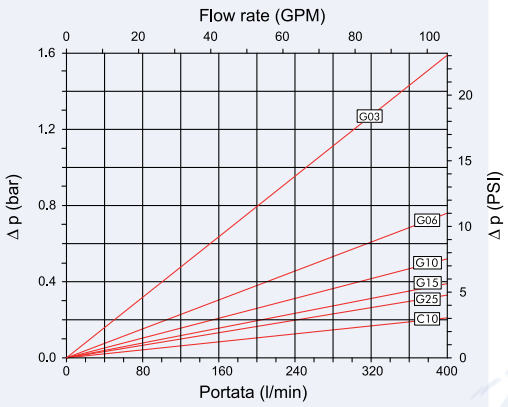

D1-43-B

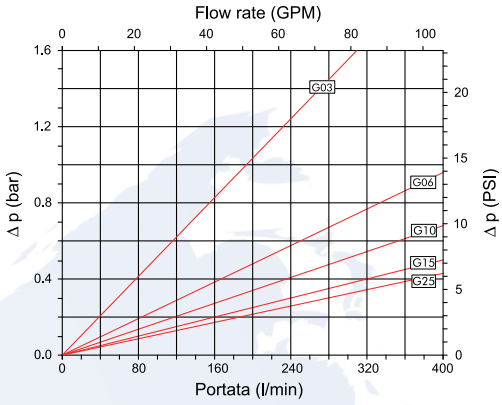

Note - Notes

FILTRAZIONE IDRAULICA
HYDRAULIC FILTRATION

FILTREC®
Technical Filtration

serie
FDM-1

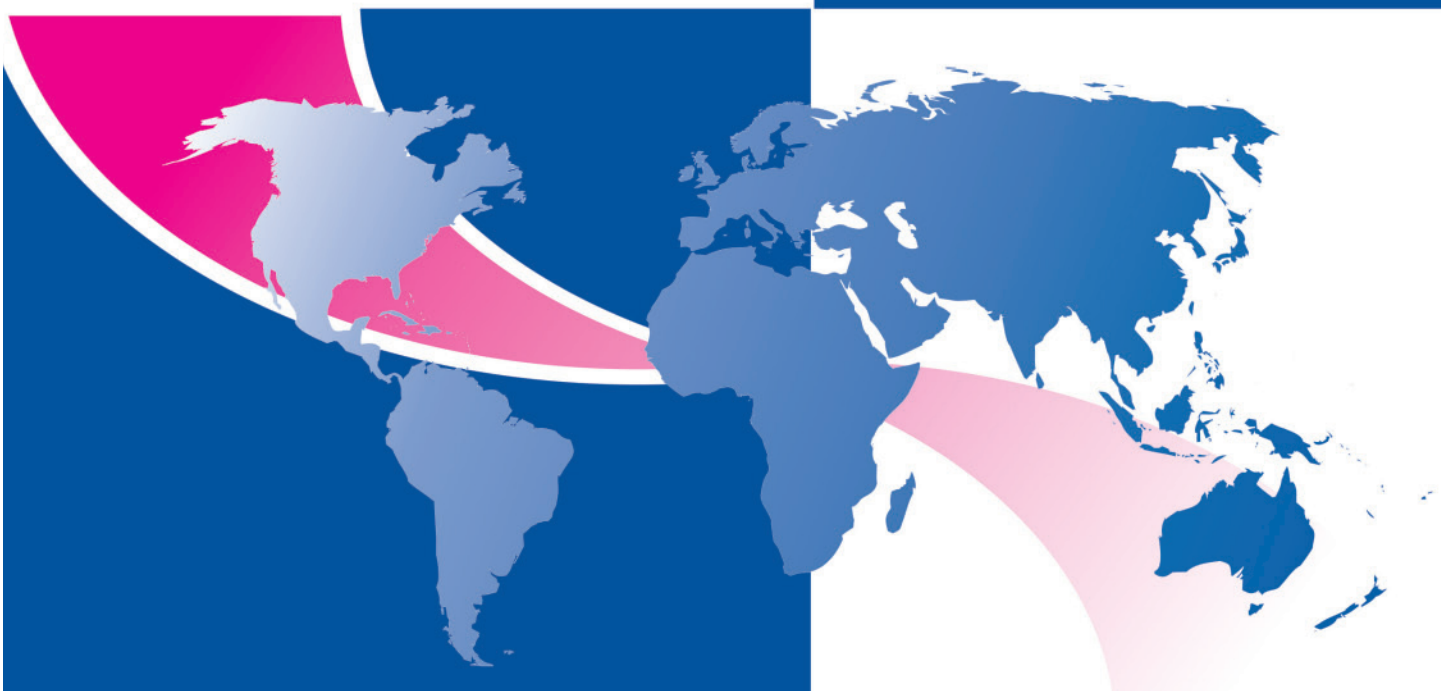

50% OFF ALL PRICES

FDM-1-11 / FDM-1-12

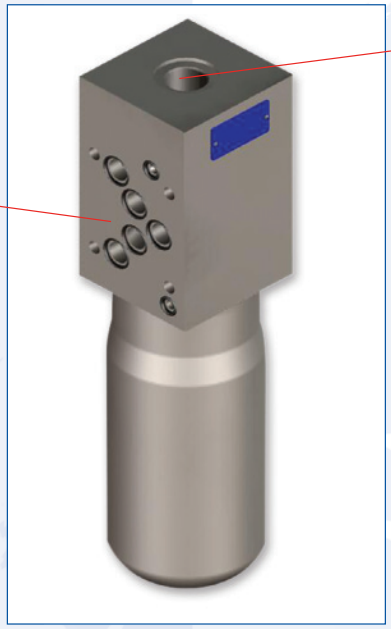

FDM-1-08

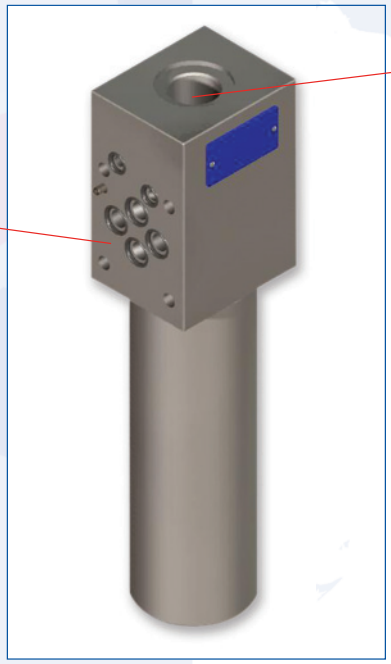

Serie FDM-1

Filtri in linea modulare per alte pressioni
Modular in-line high pressure filters

FILTER HOUSING

Technical Information

Description:	*Modulare in line high pressure filter assembly with cleanable or disposable elements*
Max flow rate:	*15/45 l/min (4/12 gpm)*
Max working pressure:	*As per NFPA T 3.10.5.1: 315 Bar (4560 psi)*
Test pressure:	*As per NFPA T 3.10.5.1: 400 Bar (5800 psi)*
Burst pressure:	*As per NFPA T 3.10.5.1: 945 Bar (13700 psi)*
Port connections:	*CETOP - 03/05*
Indicator:	*Visual and visual elettric differential indicator setting 5 and 8 bar (72,5 and 116 psi)*
By-pass valve:	*Without*
Working temperature:	*-25°C +120°C (-13°F +248°F)*
Materials:	• *Head: steel* • *Cover: steel* • *Seal: Buna-N / Viton®*
Fluids compatibility:	*ISO 2943: Filter assembly compatible with mineral oils and some synthetic or vegetable oils. With other fluid applications please contact Filtrec S.p.A.*

FILTER ELEMENT

FIlter element:	*Microglass fiber 3,6,10,25 µm* *Wire mesh 10, 25 µm*
Collapse pressure:	*As for ISO 2941: 21/210 Bar*

DESCRIPTION	ORDER CODE	FLOW RATE	PRICE	ELEMENT	PRICE
COMPLETE WITH HIGH COLLAPSE ELEMENTS, VISUAL INDICATOR AND BYPASS VALVE					
3 MICRON FIBREGLASS					
FDM-1-08-G03-B-D-Z12	ZZ004956	6 L/MIN	£300.86	D108G03B	£116.37
FDM-1-11-G03-B-D-Z12	ZZ004957	18 L/MIN	£430.46	D111G03B	£124.30
6 MICRON FIBREGLASS					
FDM-1-08-G06-B-D-Z12	ZZ004958	8 L/MIN	£300.86	D108G06B	£116.37
FDM-1-11-G06-B-D-Z12	ZZ004959	24 L/MIN	£430.46	D111G06B	£124.30
10 MICRON FIBREGLASS					
FDM-1-08-G10-B-D-Z12	ZZ004960	8 L/MIN	£286.03	D108G10B	£95.09
FDM-1-11-G10-B-D-Z12	ZZ004961	24 L/MIN	£411.28	D111G10B	£96.74

THE GIVEN FLOW RATE VALUES REFER TO APPLICATIONS WITH MINERAL OIL HAVING VISCOSITY OF 30 CST AT WORKING TEMPERATURE. FOR APPLICATIONS WITH DIFFERENT FLUID OR WORKING CONDITIONS, A CORRECTIVE FACTOR MUST BE APPLIED BY REFERING TO THE TECHNICAL INFORMATION.

OPTIONAL EXTRAS

VITON SEALS	PRICE
FDM-1-08	£9.92
FDM-1-11	£12.72
INDICATORS	
Z13 DIFFERENTIAL VISUAL AND ELECTRIAL 5 BAR 72.5 PSI	£65.13
Z17 DIFFERENTIAL VISUAL SWITCH 8 BAR 116 PSI	£47.32
Z18 DIFFERENTIAL VISUAL AND ELECTRICAL 8 BAR 116 PSI	£63.60

50% OFF ALL PRICES

Informazioni dimensionali - *Overall dimensions*

FDM-1-08
Versione destra

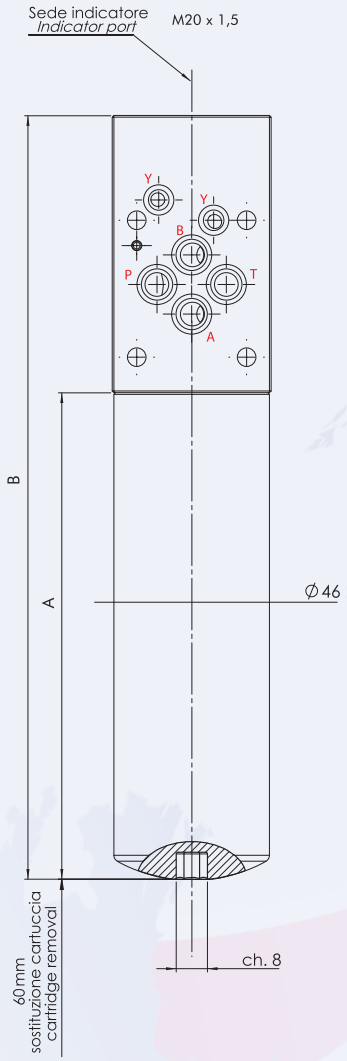

FDM-1-11/ FDM-1-12
Versione destra

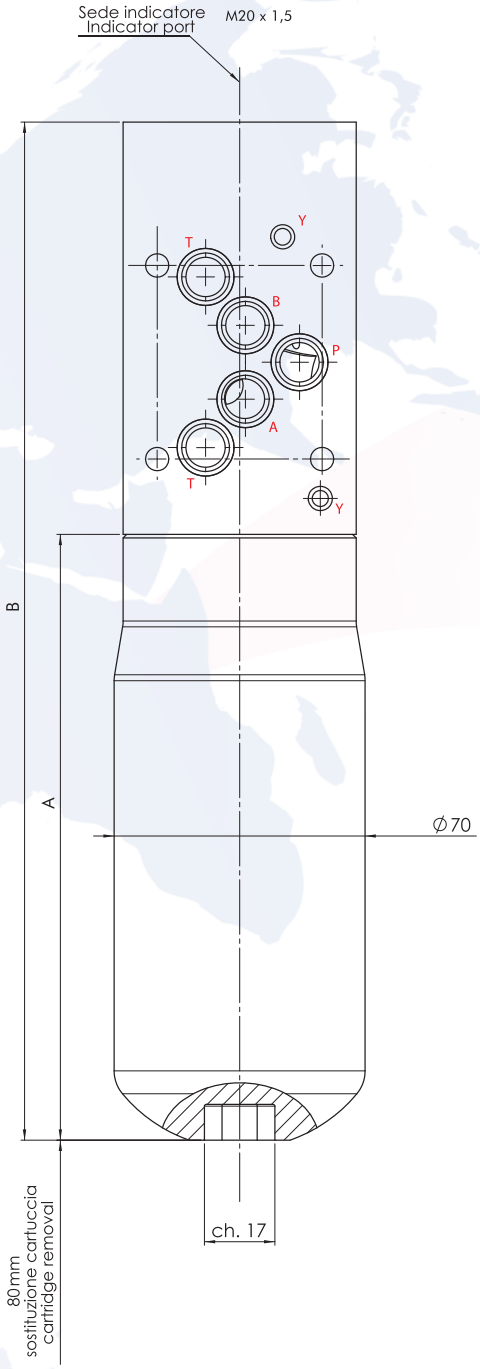

1) Grandezza nominale - *Nominal size*

Codice - *Code*	A	B	Cart. ricambio - *Element*
FDM-1-08	144	226	D-1-08
FDM-1-11	169	284	D-1-11
FDM-1-12	265	380	D-1-12

2) Grado di filtrazione - *Filtration ratings*

Codice - *Code*	Materiale - *Media*	Efficienza - *Efficiency*
0	senza cartuccia/ *no element*	------
G03	microfibra inorganica *microglass fiber*	$\beta_{4,5\,\mu m\,(c)} \geq 1000$
G06		$\beta_{7\,\mu m\,(c)} \geq 1000$
G10		$\beta_{12\,\mu m\,(c)} \geq 1000$
G25		$\beta_{27\,\mu m\,(c)} \geq 1000$
T10	tela metallica / *wire mesh*	------
T25		

3) Collasso cartuccia - *Element collapse*

Codice - *Code*	Δp (Bar) - *Δp (PSI)*
A	21 Bar - *304,5 PSI**
B	210 Bar - *3045 PSI*

* Non disponibile per D-1-08
* *Not available for D-1-08*

4) Guarnizioni - *Seals*

Codice - *Code*	Tipo - *Type*
---	NBR
V	Viton®

5) Valvola di by-pass - *By-pass valve*

Codice - *Code*	Taratura - *Setting*
0	senza *without*

6) Posizione contenitore - *Housing position*

Codice - *Code*	Posizione - *Position*
D	contenitore destro/ *right housing*
S	contenitore sinistro / *left housing* *

* Solo su richiesta
* *Only on request*

7) Indicatori - *Indicators*

Codice *Code*	Tipo indicatore - *Indicator type*	Taratura *Setting*
0	senza / *without*	------
Z12	differenziale visivo *differential visual*	5 Bar *72,5 psi*
Z13	differenziale visivo ed elettrico *differential visual and electrical*	5 Bar *72,5 psi*
Z17	differenziale visivo *differential visual switch*	8 Bar *116 psi*
Z18	differenziale visivo ed elettrico *differential visual and electrical*	8 Bar *116 psi*

Codici per l'ordinazione - *Ordering information*

Filtro completo
Filter assembly

FDM-1	08	G10	B	V	0	D	Z17
	1*	2*	3*	4*	5*	6*	7*

Cartuccia
Filter element

D1	08	G10	B	V
	1*	2*	3*	4*

50% OFF ALL PRICES

Curve di portata - *Pressure drop charts*

Le curve (secondo ISO 3968 classe B) sono ottenute con olio minerale avente viscosità di 30 cSt e densità di 0,86 Kg/dm³.
Per viscosità e densità diverse i dati variano.

Pressure drop charts (as per ISO 3968 class B) are obtained using mineral oil with 30 cSt viscosity and 0,86 Kg/dm³ density. With different values of viscosity and density data may vary.

Filtro FDM-1-08 *Housing FDM-1-08*

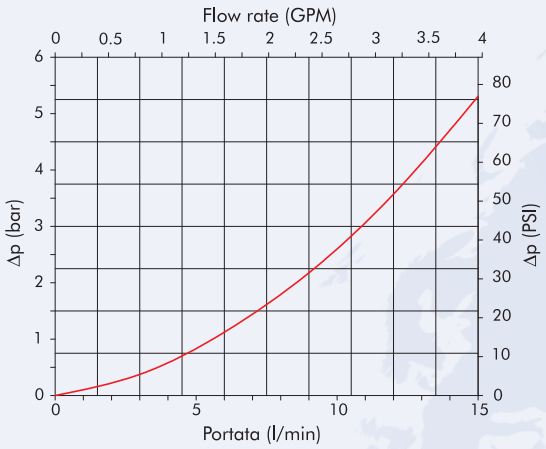

Filtro FDM-1-11/12 *Housing FDM-1-11/12*

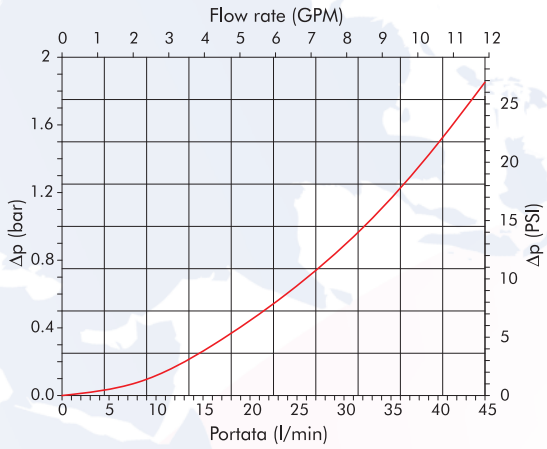

D-1-11-..-A

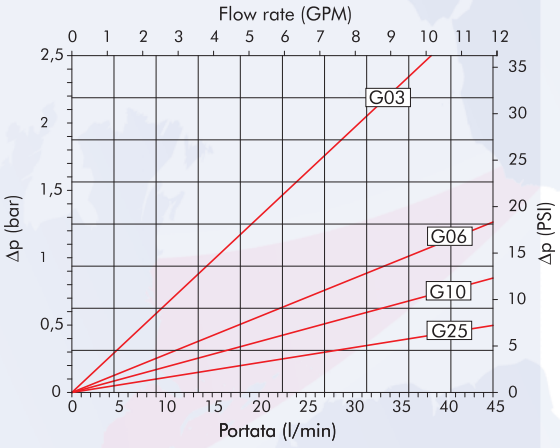

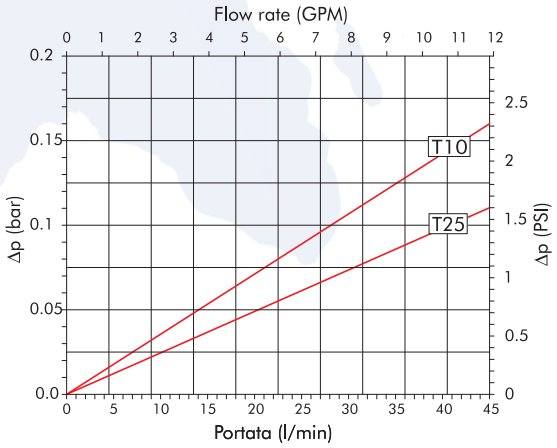

D-1-12-..-A

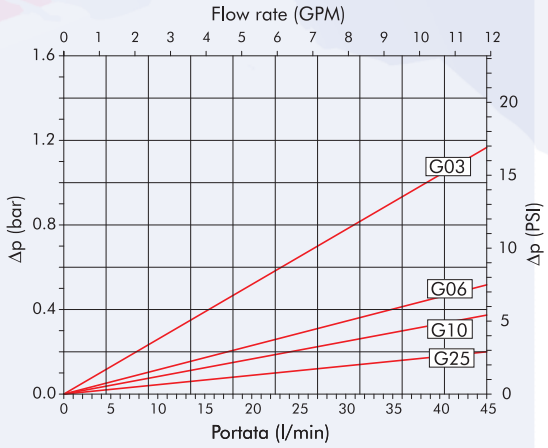

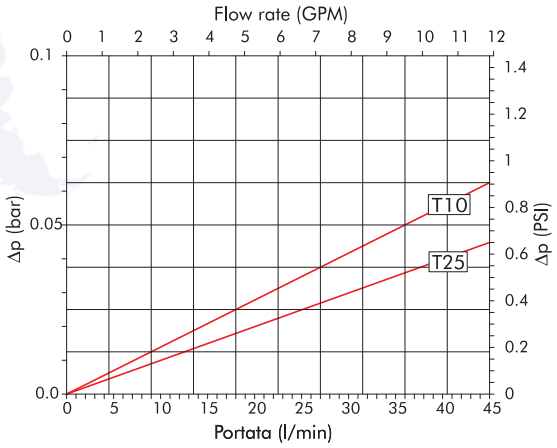

D-1-08-..-B

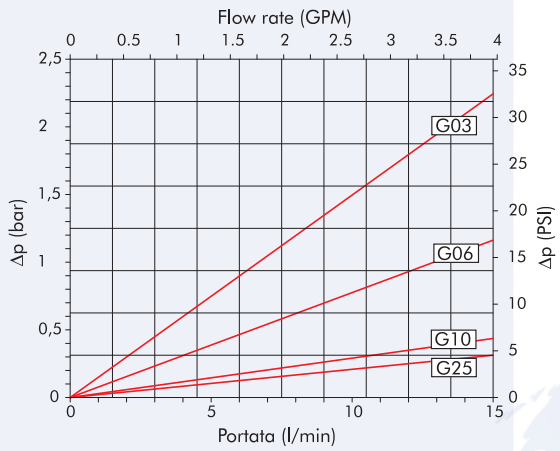

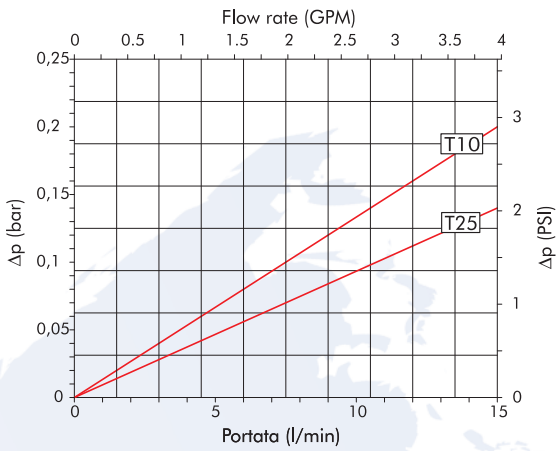

D-1-11-..-B

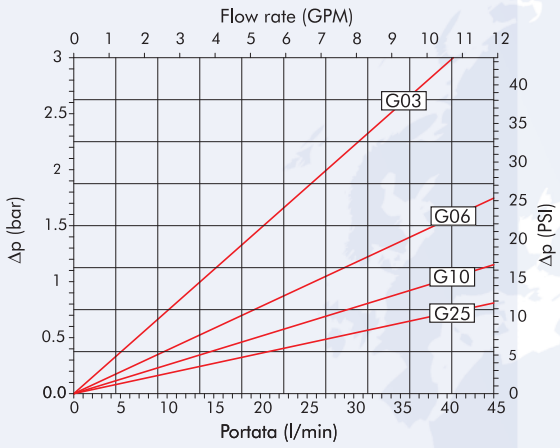

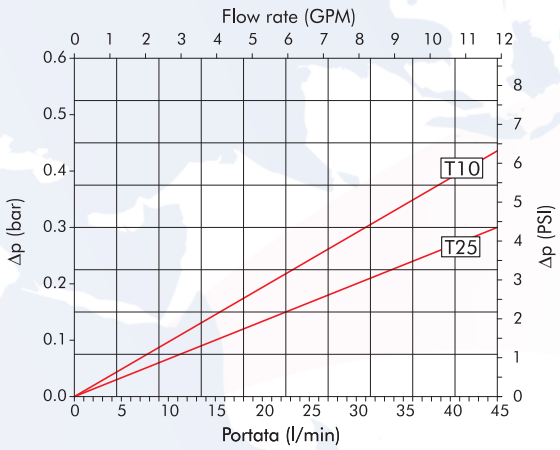

D-1-12-..-B

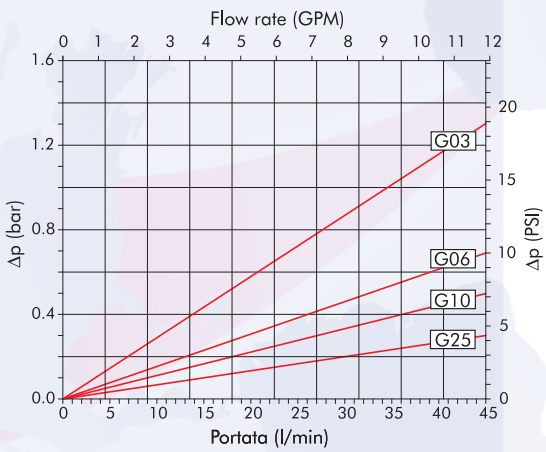

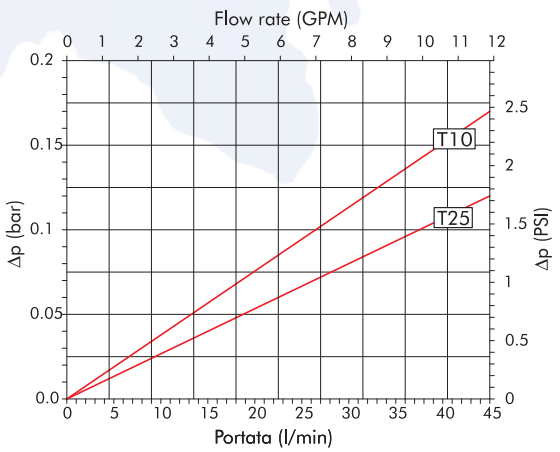

* Viton® è un marchio registrato da DuPont - *Viton® is a registered trademark of DuPont*
Sono possibili variazioni al catalogo senza preavviso - *Catalogue may change without notice*

50% OFF ALL PRICES

FILTREC ACCESSORIES

CLOGGING INDICATORS.....748
FL SERIES FLUID LEVEL TEMPERATURE GAUGES.....760
FB-1 SERIES AIR BREATHER FILTERS.....763
FT SERIES FILLER BREATHER FILTERS.....767

FLOWFIT®

FILTREC®
Technical Filtration

INDICATORI DI INTASAMENTO
CLOGGING INDICATORS

ORDER CODE	DESCRIPTION	SETTING	THREAD	PRICE
R1	PRESSURE GAUGE INDICATOR	0-10 BAR (BLACK) 0-145 PSI (RED)	1/8" BSP	£7.63
R2	PRESSURE SWITCH	1.3 BAR 18.85 PSI N.A O.C	1/8" BSP	£27.98
R3	PRESSURE SWITCH	1.3 BAR 18.85 PSI N.C C.C	1/8" BSP	£27.56
R4	PRESSURE SWITCH	1.3 BAR 18.85 PSI	1/8" BSP	£100.74
R6	VISUAL PRESSURE	1.2 BAR 17.4 PSI	1/8" BSP	£34.60
R7	PRESURE VACUUM GAUGE	-1 TO 5BAR (BLACK) 14.5 TO 72.5 PSI (RED)	1/8" BSP	£9.67
S1	VACUUM GAUGE	0 TO -1 BAR (BLACK) 0 TO 114.5 PSI (RED)	1/8" BSP	£11.36
S2	VACUUM SWITCH	-0.2 BAR (2.9 PSI) N.A O.C	1/8" BSP	£39.94
S3	VACUUM SWITCH	-0.2 BAR -2.9 PSI N.C C.C	1/8" BSP	£33.75
S4	VACUUM SWITCH VIEW	-0.3 BAR -4.35PSI	1/8" BSP	£19.08
S5	VACUUM GAUGE	0 TO -1 BAR (BLACK) 0 TO -14.5 PSI (RED)	1/4" BSP	£6.11
S6	VACUUM SWITCH	-0.2 BAR -2.9 PSI	1/4" BSP	£91.58
Z1	DIFFERENTIAL VISUAL SWITCH	1.3 BAR 18.85 PSI	M20 X 1.5	£47.32
Z2	DIFFERENTIAL ELECTRICAL VISUAL SWITCH	1.3 BAR 18.85 PSI	M20 X 1.5	£65.13
Z3	DIFFERENTIAL VISUAL SWITCH	5 BAR 72.5 PSI	1/2" BSP	£45.79
Z4	DIFFERENTIAL ELECTRICAL VISUAL SWITCH	5 BAR 72.5 PSI	1/2" BSP	£63.60
Z5	DIFFERENTIAL VISUAL SWITCH	8 BAR 116 PSI	1/2" BSP	£45.79
Z6	DIFFERENTIAL ELECTRICAL VISUAL SWITCH	8 BAR 116 PSI	1/2" BSP	£63.60
Z12	DIFFERENTIAL VISUAL SWITCH	5 BAR 72.5 PSI	M20 X 1.5	£47.32
Z13	DIFFERENTIAL ELECTRIC VISUAL SWITCH	5 BAR 72.5 PSI	M20 X 1.5	£65.13
Z15	DIFFERENTIAL VISUAL SWITCH	1.3 BAR 18.85 PSI	M20 X 1.5	£47.32
Z16	DIFFERENTIAL ELECTRIC VISUAL SWITCH	1.3 BAR 18.85 PSI	M20 X 1.5	£65.13
Z17	DIFFERENTIAL VISUAL SWITCH	8 BAR 116 PSI	M20 X 1.5	£47.32
Z18	DIFFERENTIAL ELECTRIC VISUAL SWITCH	8 BAR 116 PSI	M20 X 1.5	£63.60
Z20	DIFFERENTIAL VISUAL SWITCH	1.3 BAR 18.85 PSI	M18 X 1.5	£26.46
Z21	DIFFERENTIAL ELECTRIC SWITCH	1.3 BAR 18.85 PSI	M18 X 1.5	£21.88
Z24	DIFFERENTIAL VISUAL SWITCH	2 BAR 29 PSI	1/2" BSP	£47.32
Z25	DIFFERENTIAL ELECTRIC VISUAL SWITCH	2 BAR 29 PSI	1/2" BSP	£65.13
Z26	DIFFERENTIAL VISUAL SWITCH	5 BAR 72.5 PSI	1/2" BSP	£47.32
Z27	DIFFERENTIAL ELECTRIC VISUAL SWITCH	5 BAR 72.5 PSI	1/2" BSP	£65.13
Z28	DIFFERENTIAL VISUAL SWITCH	8 BAR 116 PSI	1/2" BSP	£47.32
Z29	DIFFERENTIAL ELECTRIC VISUAL SWITCH	8 BAR 116 PSI	1/2" BSP	£65.13
Z30	DIFFERENTIAL VISUAL SWITCH	5 BAR 72.5 PSI	M20 X 1.5	£47.32
Z31	DIFFERENTIAL ELECTRIC VISUAL SWITCH	5 BAR 72.5 PSI	M20 X 1.5	£65.13
Z32	DIFFERENTIAL VISUAL SWITCH	8 BAR 116 PSI	M20 X 1.5	£47.32
Z33	DIFFERENTIAL ELECTRIC VISUAL SWITCH	8 BAR 116 PSI	M20 X 1.5	£65.13

Clogging indicators

Technical information

Clogging indicators controlling and determinating the moment when filter change should take place are available for the entire FILTREC assembly range.

ABSOLUTE pressure indicators

They measure the pressure in the filter vs the atmospheric one.
Usually they are used on return line filters discharging in tank.

Clogging indicators

- ***Visual:*** *The indicator is provided with a bar and a psi scale. The pointer inidicates clog value.*

- ***Electrical:*** *Electrical signal indicates clog value. It is used in hard to reach areas, the signal is visible on a control panel through a led.*

DIFFERENTIAL pressure indicators

Differential pressure indicators measure the difference in pressure between the dirty and the clean side of the filter. They are not affected by atmospherical pressure. Usually they are used on pressure and return line filters.

Clogging indicators:

- ***Visual:*** *A colored indicator reports when pressure setting is reached:*
  GREEN = differential pressure minor than setting value
  RED = differential pressure major than setting value

- ***Electrical:*** *An electrical signal indicates when admissible differential pressure is reached.*
  It is used in hard to reach areas, the signal is visible on a control panel through a luminous led.

- ***Visual Electrical:*** *Both colored indicator and electrical signal indicate when pressure setting is reached.*

ASSOLUTI - *ABSOLUTE*

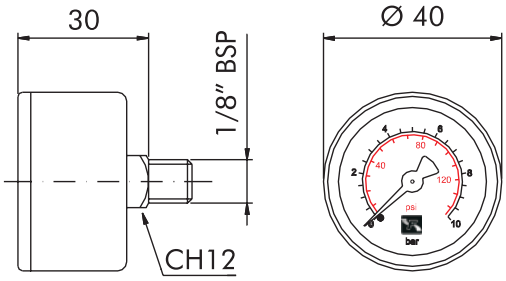

MANOMETRO - *PRESSURE GAUGE INDICATOR*

Cassa in ABS nero - *Housing in black ABS material*

Simbolo - *Symbol*

Codice - Code	Taratura - *Setting*
R1	0 ÷ 10 bar (colore nero - *black color*) 0 ÷ 145 psi (colore rosso - *red color*)

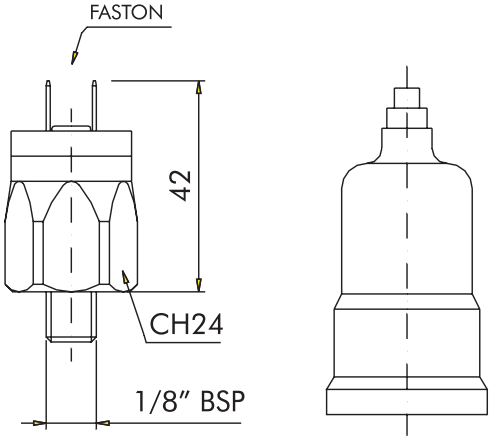

PRESSOSTATO

- Corrente: 0,5 A resistivo/ 0,2 A induttivo
- Tensione max: 250V AC
- Cappuccio protettivo: PVC

PRESSURE SWITCH

- *Current: 0,5 A resistive/ 0,2 A inductive*
- *Max voltage: 250V AC*
- *Cap: PVC*

Simbolo - *Symbol*	Simbolo - *Symbol*
R2 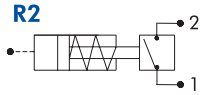	**R3** 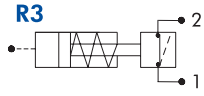

Codice *Code*	Taratura - *Setting*	Contatti *Contact*
R2	1,3 bar (*18,85 psi*)	N.A. O.C.
R3	1,3 bar (*18,85 psi*)	N.C. C.C.

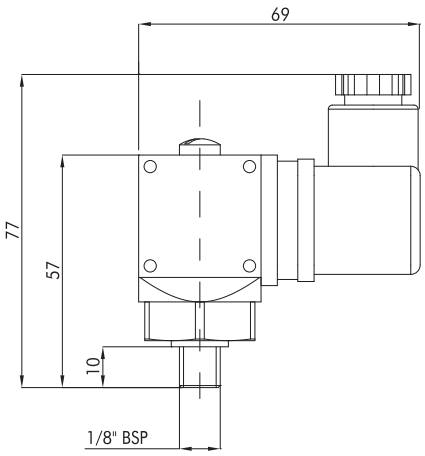

PRESSOSTATO

- Corrente: 5 A resistivo
- Tensione max: 250V AC
- Protezione: IP65 secondo DIN 40050
- Campo di taratura regolabile: 0,5 - 10 bar

PRESSURE SWITCH

- *Current: 5 A resistive*
- *Max voltage: 250V AC*
- *Protection: IP65 as per DIN 40050*
- *Setting range: 0,5 - 10 bar*

Simbolo - *Symbol*
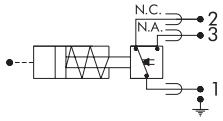

Codice - Code	Taratura - *Setting*
R4	1,3 bar (*18,85 psi*)

50% OFF ALL PRICES

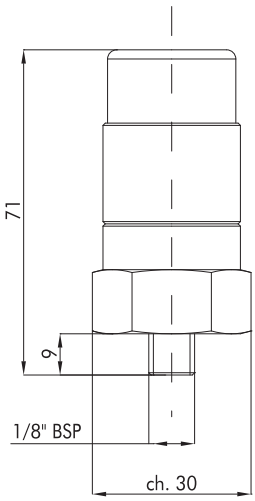

PRESSOSTATO VISIVO
VISUAL PRESSURE

Simbolo - *Symbol*

Codice - *Code*	Taratura - *Setting*
R6	1,2 bar - *17,4 psi*

MANO VUOTOMETRO
PRESSURE VACUUM GAUGE
Cassa in ABS nero - *Housing in black ABS material*

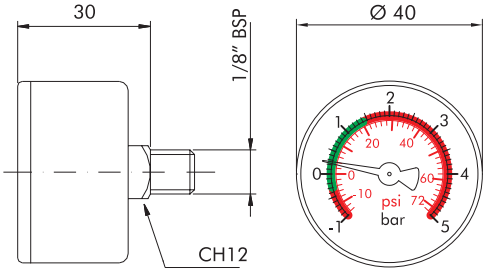

Simbolo - *Symbol*

Codice - *Code*	Taratura - *Setting*
R7	-1 ÷ 5 bar (colore nero - *black color*) - 14,5 ÷ 72,5 psi (colore rosso - *red color*)

VUOTOMETRO - *VACUUM GAUGE*
Cassa in ABS nero - *Housing in black ABS material*

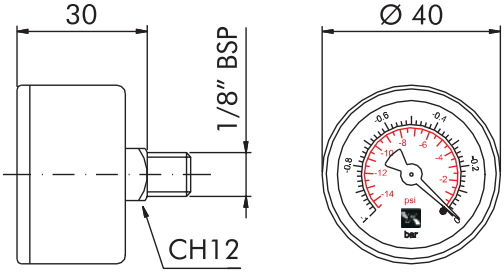

Simbolo - *Symbol*
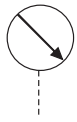

Codice - *Code*	Taratura - *Setting*
S1	0 ÷ -1 bar (colore nero - *black color*) 0 ÷ - 14,5 psi (colore rosso - *red color*)

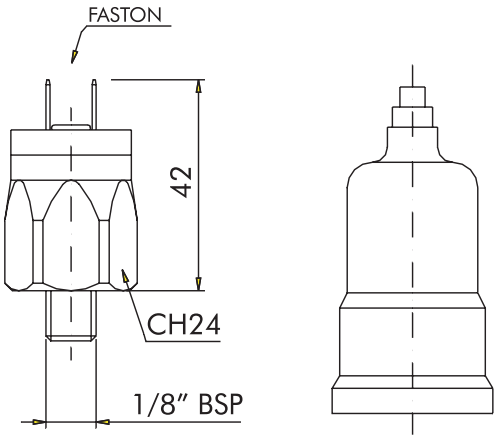

VUOTOSTATO

- Corrente: 0,5 A resistivo/ 0,2 A induttivo
- Tensione max: 250V AC
- Cappuccio protettivo: PVC

VACUUM SWITCH

- *Current: 0,5 A resistive/ 0,2 A inductive*
- *Max voltage: 250V AC*
- *Cap: PVC*

Simbolo - *Symbol*	Simbolo - *Symbol*
S2 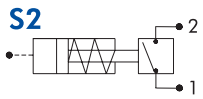	**S3** 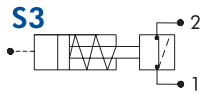

Codice *Code*	Taratura - *Setting*	Contatti *Contact*
S2	-0,2 bar *(-2,9 psi)*	N.A. O.C.
S3	-0,2 bar *(-2,9 psi)*	N.C. C.C.

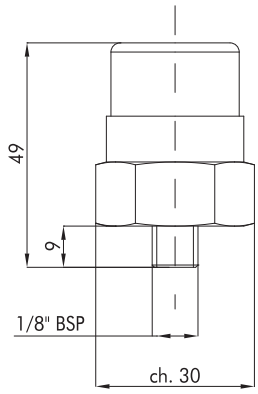

VUOTOSTATO VISIVO

VACUUM SWITCH VIEW

Simbolo - *Symbol*
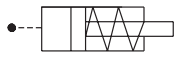

Codice - *Code*	Taratura - *Setting*
S4	-0,3 bar / *-4,35 psi*

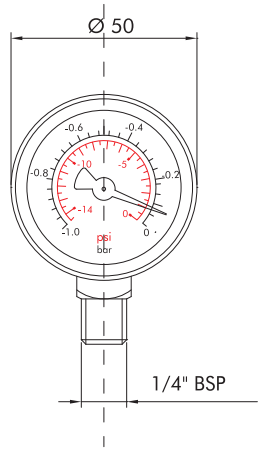

VUOTOMETRO

VACUUM GAUGE

Cassa in ABS nero - *Housing in black ABS material*

Simbolo - *Symbol*
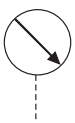

Codice - *Code*	Taratura - *Setting*
S5	0 ÷ -1 bar (colore nero - *black color*) 0 ÷ - 14,5 psi (colore rosso - *red color*)

50% OFF ALL PRICES

ASSOLUTI - *ABSOLUTE*

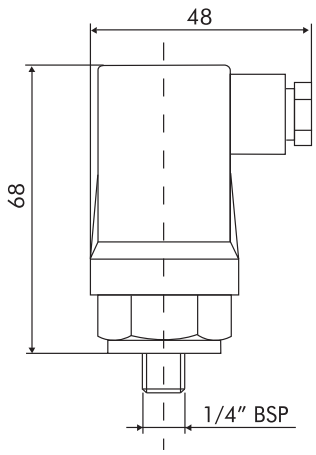

VUOTOSTATO
- Corrente: 5 A resistivo
- Tensione max: 220V AC
- Protezione: IP65 secondo DIN 40050

VACUUM SWITCH
- *Current: 5 A resistive*
- *Max voltage: 250V AC*
- *Protection: IP65 as per DIN 40050*

Simbolo - *Symbol*

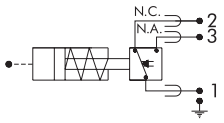

Codice - *Code*	Taratura - *Setting*
S6	-0,2 bar *(-2,9 psi)*

DIFFERENZIALI - *DIFFERENTIAL*

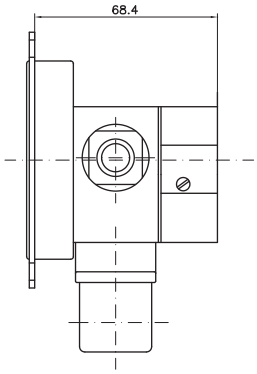

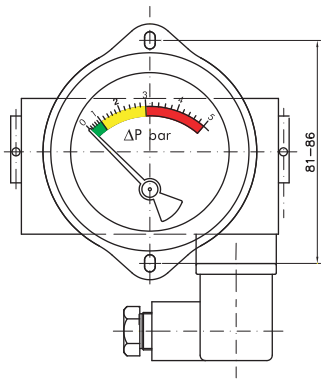

DIFFERENZIALE VISIVO ELETTRICO

Scala colorata:
- 0÷1 bar colore verde
- 1÷3 bar colore giallo
- 3÷5 bar colore rosso

DIFFERENTIAL ELECTRIC VISUAL SWITCH

Visual indicator:
- *0÷1 bar (14,5 psi) green*
- *1÷3 bar (43,5 psi) yellow*
- *3÷5 bar (72,5 psi) red*

Simbolo - *Symbol*

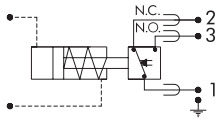

Codice - *Code*	Taratura - *Setting*
Z10*	2 bar *(29 psi)*

Consigliato per montaggio su filtri per olio.
Per maggiori informazioni contattate il nostro ufficio tecnico.

For other information please contact our technical department.
Recommended for oil filters.

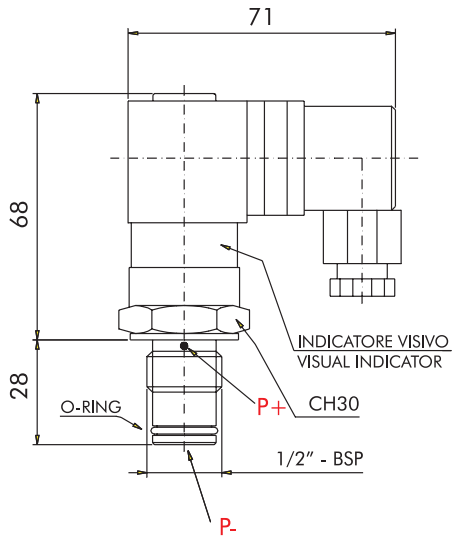

DIFFERENZIALE VISIVO ELETTRICO

- Visore colorato:
  - VERDE: cartuccia pulita
  - ROSSO: cartuccia sporca
- Connettore secondo DIN 43650
- Protezione: IP65 secondo DIN 40050
- Corrente massima: 5A resistivo - 5A induttivo
- Tensione massima: 250V CA - 30V CC

DIFFERENTIAL ELECTRIC VISUAL SWITCH

- *Visual indicator:*
  -GREEN: clean element
  - RED: dirty element
- *Electrig plug connection as per DIN 43650*
- *Protection: IP65 secondo DIN 40050*
- *Max current: 5A resistive 5A inductive*
- *Max voltage: 250V AC - 30V DC*

Simbolo - *Symbol*

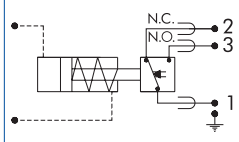

Codice *Code*	Taratura - *Setting*
Z25	2 bar *(29 psi)*
Z27	5 bar *(72,5 psi)*
Z29	8 bar *(116 psi)*

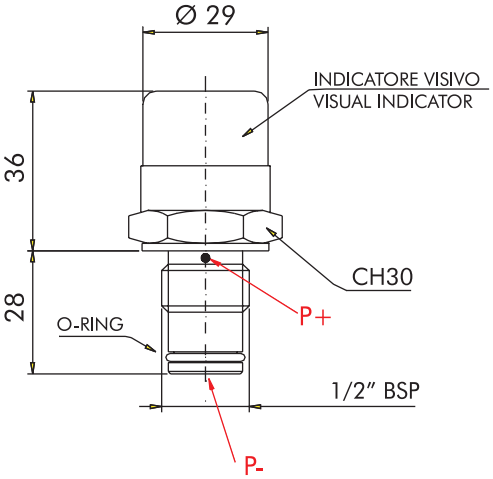

DIFFERENZIALE VISIVO

Visore colorato:
- VERDE: cartuccia pulita
- ROSSO: cartuccia sporca

DIFFERENTIAL VISUAL SWITCH

Visual indicator:
- *GREEN: clean element*
- *RED: dirty element*

Simbolo - *Symbol*

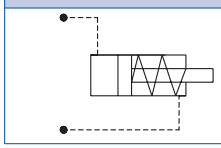

Codice *Code*	Taratura - *Setting*
Z24	2 bar *(29 psi)*
Z26	5 bar *(72,5 psi)*
Z28	8 bar *(116 psi)*

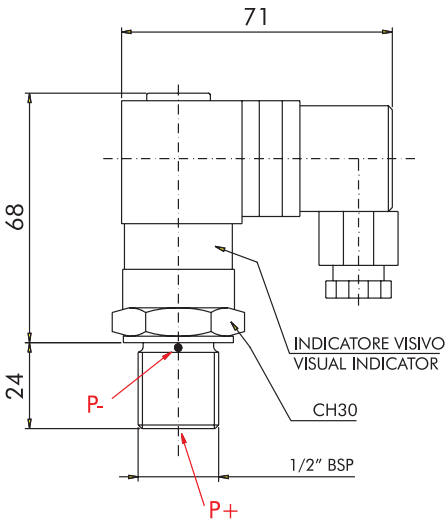

DIFFERENZIALE VISIVO ELETTRICO

- Visore colorato:
  - VERDE: cartuccia pulita
  - ROSSO: cartuccia sporca
- Connettore secondo DIN 43650
- Protezione: IP65 secondo DIN 40050
- Corrente massima: 5A resistivo - 5A induttivo
- Tensione massima: 250V CA - 30V CC

DIFFERENTIAL ELECTRIC VISUAL SWITCH

Visual indicator:

- *-GREEN: clean element*
- *- RED: dirty element*
- *Electrig plug connection as per DIN 43650*
- *Protection: IP65 secondo DIN 40050*
- *Max current: 5A resistive 5A inductive*
- *Max voltage: 250V AC - 30V DC*

Simbolo - *Symbol*
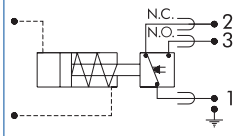

Codice *Code*	Taratura - *Setting*
Z4	5 bar *(72,5 psi)*
Z6	8 bar *(116 psi)*

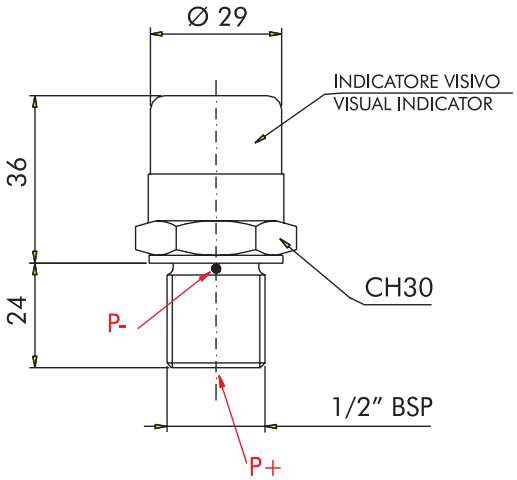

DIFFERENZIALE VISIVO

Visore colorato:

- VERDE: cartuccia pulita
- ROSSO: cartuccia sporca

DIFFERENTIAL VISUAL SWITCH

Visual indicator:

- *GREEN: clean element*
- *RED: dirty element*

Simbolo - *Symbol*
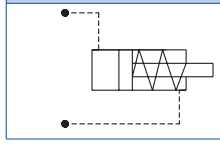

Codice *Code*	Taratura - *Setting*
Z3	5 bar *(72,5 psi)*
Z5	8 bar *(116 psi)*

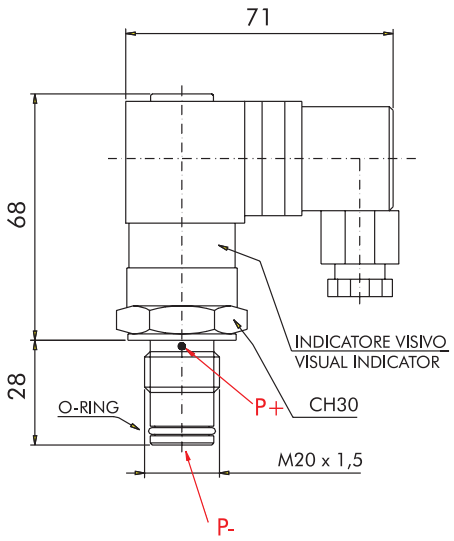

Simbolo - *Symbol*

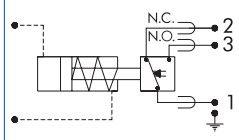

DIFFERENZIALE VISIVO ELETTRICO

- Visore colorato:
  - VERDE: cartuccia pulita
  - ROSSO: cartuccia sporca
- Connettore secondo DIN 43650
- Protezione: IP65 secondo DIN 40050
- Corrente massima: 5A resistivo 5A induttivo
- Tensione massima: 250V CA - 30V CC

DIFFERENTIAL ELECTRIC VISUAL SWITCH

- *Visual indicator:*
  - *GREEN: clean element*
  - *RED: dirty element*
- *Electrig plug connection as per DIN 43650*
- *Protection: IP65 secondo DIN 40050*
- *Max current: 5A resistive 5A inductive*
- *Max voltage: 250V AC - 30V DC*

Codice *Code*	Taratura - *Setting*
Z2	1,3 bar *(18,85 psi)*
Z13	5 bar *(72,5 psi)*
Z18	8 bar *(116 psi)*

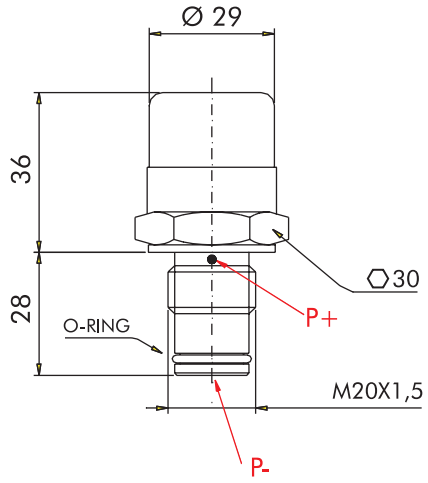

Simbolo - *Symbol*

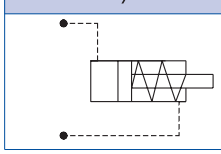

DIFFERENZIALE VISIVO

Visore colorato:
- VERDE: cartuccia pulita
- ROSSO: cartuccia sporca

DIFFERENTIAL VISUAL SWITCH

Visual indicator:
- *GREEN: clean element*
- *RED: dirty element*

Codice *Code*	Taratura - *Setting*
Z1	1,3 bar *(18,85 psi)*
Z12	5 bar *(72,5 psi)*
Z17	8 bar *(116 psi)*

50% OFF ALL PRICES

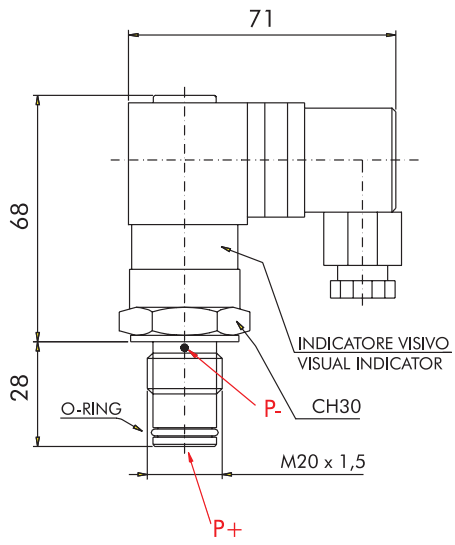

DIFFERENZIALE VISIVO ELETTRICO

- Visore colorato:
  - VERDE: cartuccia pulita
  - ROSSO: cartuccia sporca
- Connettore secondo DIN 43650
- Protezione: IP65 secondo DIN 40050
- Corrente massima: 5A resistivo 5A induttivo
- Tensione massima: 250V CA - 30V CC

DIFFERENTIAL ELECTRIC VISUAL SWITCH

- *Visual indicator:*
  - *GREEN: clean element*
  - *RED: dirty element*
- *Electrig plug connection as per DIN 43650*
- *Protection: IP65 secondo DIN 40050*
- *Max current: 5A resistive 5A inductive*
- *Max voltage: 250V AC - 30V DC*

Simbolo - *Symbol*

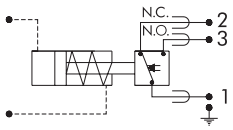

Codice Code	Taratura - *Setting*
Z16	1,3 bar *(18,85 psi)*
Z31	5 bar *(72,5 psi)*
Z33	8 bar *(116 psi)*
Z38	2,7 bar *(40 psi)*

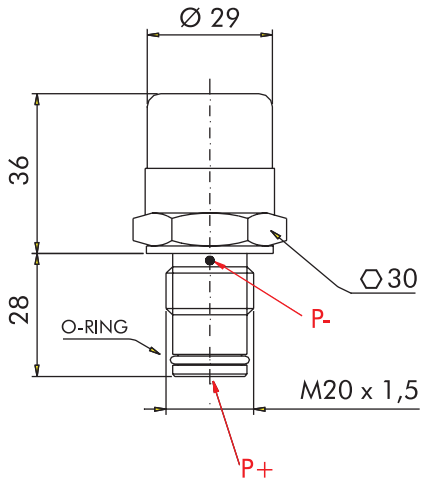

DIFFERENZIALE VISIVO

Visore colorato:

- VERDE: cartuccia pulita
- ROSSO: cartuccia sporca

DIFFERENTIAL VISUAL SWITCH

Visual indicator:

- *GREEN: clean element*
- *RED: dirty element*

Simbolo - *Symbol*

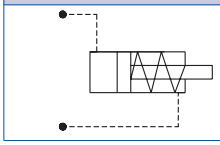

Codice Code	Taratura - *Setting*
Z15	1,3 bar *(18,85 psi)*
Z30	5 bar *(72,5 psi)*
Z32	8 bar *(116 psi)*
Z37	2,7 bar *(40 psi)*

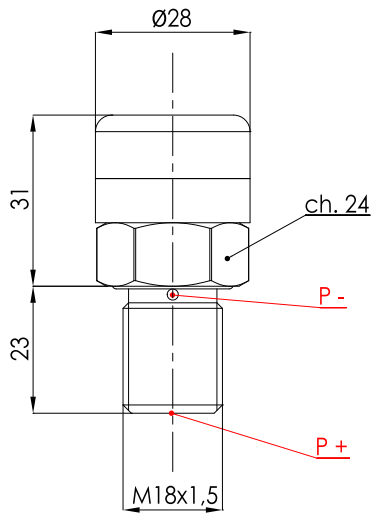

DIFFERENZIALE VISIVO

Visore colorato:
- VERDE: cartuccia pulita
- ROSSO: cartuccia sporca

DIFFERENTIAL VISUAL SWITCH

Visual indicator:
-GREEN: clean element
- RED: dirty element

Simbolo - *Symbol*

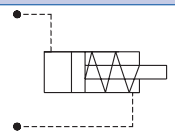

Codice Code	Taratura - *Setting*
Z20	1,3 bar *(18,85 psi)*

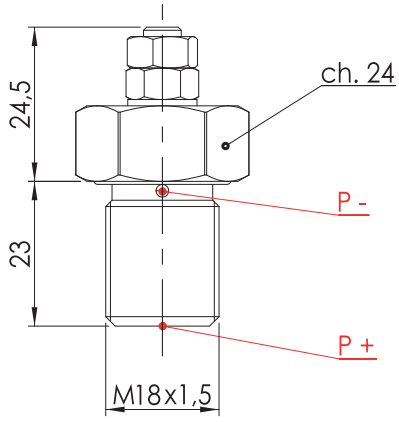

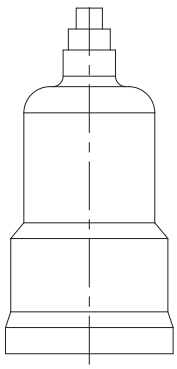

DIFFERENZIALE ELETTRICO

- Corrente massima: 0,5A resistivo / 0,2A induttivo
- Tensione massima: 30V AC
- Protezione: IP64 secondo DIN 40050

DIFFERENTIAL ELECTRIC SWITCH

- *Max current: 0,5A resistive / 0,2A inductive*
- *Max voltage: 30V AC*
- *Protection: IP64 as per DIN 40050*

Simbolo - *Symbol*

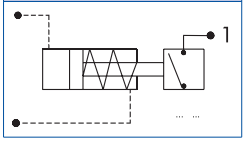

Codice Code	Taratura - *Setting*
Z21	1,3 bar *(18,85 psi)*

50% OFF ALL PRICES

Applicazioni - *Applications*

A seguire tabella che indica le applicazioni degli indicatori per tutte le famiglie di filtri idraulici e industriali FILTREC.

The table below shows type of indicator available for the full range of complete and industrial Filtrec filters.

	AVVITABILI spin on			PRESSIONE pressure								RITORNO return			ASPIRA-ZIONE suction	INDUSTRIALE industrial	
CODE	FA-1	FA-2	FA-4	F30	F70	F100	FD-3	F160	F280	F420	FDM-1	FR-1	FCR-7	FR-8	FS-7	SX/DX	IFS/IFD
R1	■	■										■	■	■			
R2	■	■										■	■	■			
R3	■	■										■	■	■			
R4	■																
R6	■											■		■			
R7	■	■										■	■	■			
S1	■																
S2	■																
S3	■																
S4	■																
S5															■		
S6															■		
Z1	■																
Z2	■																
Z10																■	■
Z12							■				■						
Z13							■				■						
Z15	■																
Z16	■																
Z17											■						
Z18											■						
Z30				■	■	■		■	■	■							
Z31				■	■	■		■	■	■							
Z32				■	■	■		■	■	■							
Z33				■	■	■		■	■	■							
Z34	■		■														
Z35	■		■														

Codifica - *Code*

Gli indicatori sono codificati mediante una prima lettera che ne identifica l'applicazione e di seguito un numero progressivo.

The code is composed first by a letter determinating its application and then by progressive numbers.

S= aspirazione / *suction*
R= ritorno o pressione / *return or pressure*
Z= differenziale / *differential*

ACCESSORI
ACCESSORIES

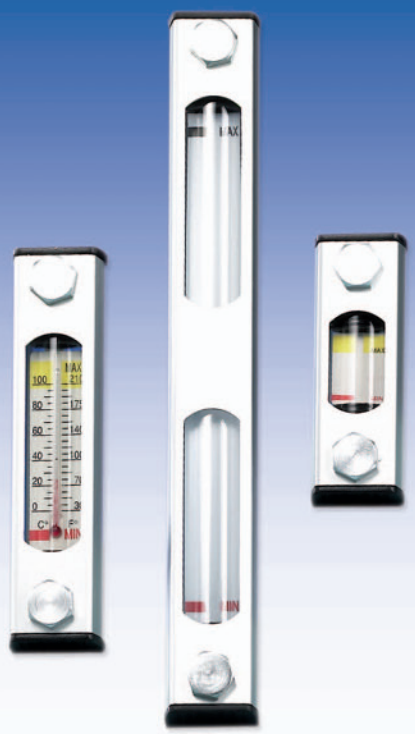

FILTREC®
Technical Filtration

serie
FL

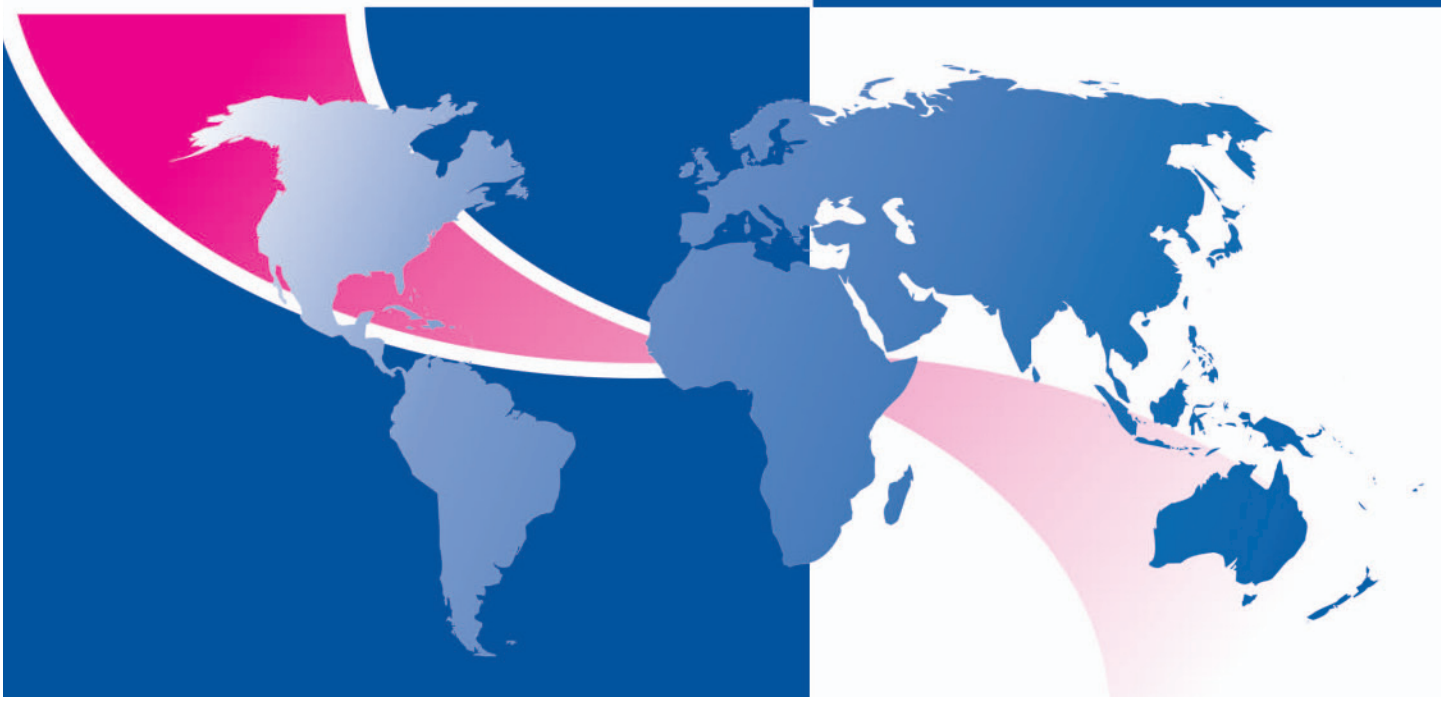

50% OFF ALL PRICES

Serie FL

Indicatori visivi di livello per fluidi
Fluid level temperature gauges

FILTER HOUSING

Technical Information

Description:	*Fluid level temperature gauges*
Max working pressure:	*1 Bar (14.5 psi)*
Connection Ports:	*Metric*
Working temperature:	*-20°C +80°C (-4°F +176°F)*
Thermometer:	*Double scale 0°C ÷ 100°C 30°F ÷ 210 °F*
Materials:	• *Heads:* *nylon* • *Protection:* *anodized aluminium* • *Screws:* *zinc steel* • *Seal:* *Buna-N* *compatible as per ISO 2943 with mineral oil (HH-HL-HM-HR-HV-HG) water oil emulsions (HFAE-HFAS)*

ORDER CODE	HOLE CENTRES	BOLT THREAD SIZE	LENGTH	WIDTH	PRICE	ELEMENT
FL1M10	76MM	M10X1.5	106MM	36MM	£15.69	D120G10A
FL1M12	76MM	M12X1.75	106MM	36MM	£15.69	D124G10A
FL1TM10	76MM	M10X1.5	106MM	36MM	£17.38	D121G10A
FL1TM12	76MM	M12X1.75	106MM	36MM	£17.38	D140G10A
FL2M10	127MM	M10X1.5	157MM	36MM	£17.21	D141G10A
FL2M12	127MM	M12X1.75	157MM	36MM	£17.21	D142G10A
FL2TM10	127MM	M10X1.5	157MM	36MM	£18.32	D120G25A
FL2TM12	127MM	M12X1.75	157MM	36MM	£18.32	D124G25A
FL3M10	254MM	M10X1.5	284MM	36MM	£27.35	D121G25A
FL3M12	254MM	M12X1.75	284MM	36MM	£27.35	D140G25A
FL3TM10	254MM	M10X1.5	284MM	36MM	£31.16	D141G25A
FL3TM12	254MM	M12X1.75	284MM	36MM	£31.16	D142G25A

Informazioni dimensionali - *Overall dimensions*

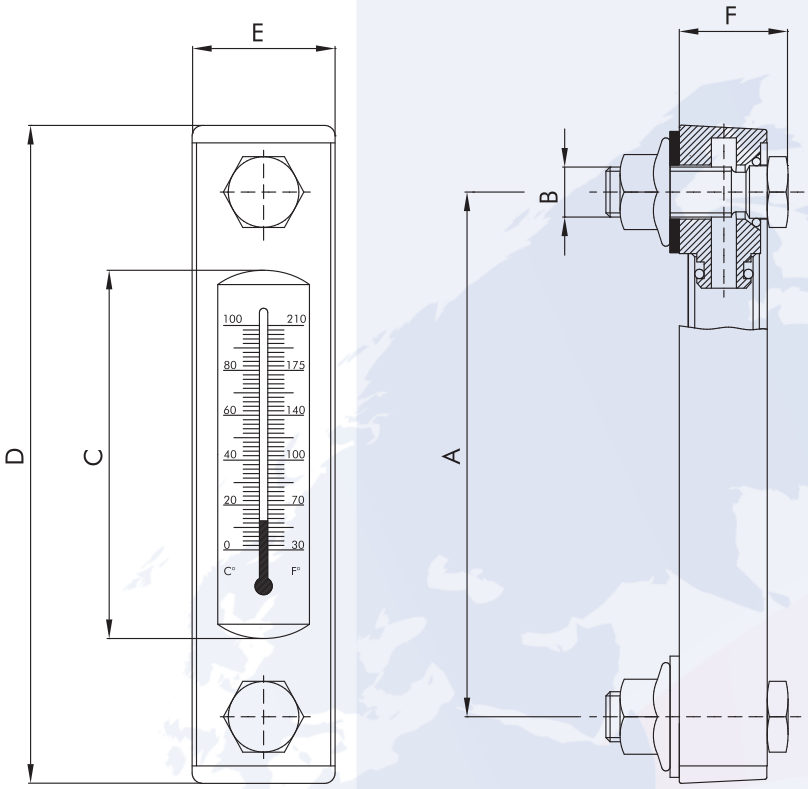

1) Grandezza nominale - *Nominal size*

Codice - *Code*	A	B	C	D	E	F
FL-1	76	M10 M12	35	106	36	30
FL-2	127		86	157	36	30
FL-3	254		213	284	36	30

2) Termometro - *Temperature indicator*

Codice - *Code*	Termometro - *Temperature indicator*
0	senza / *without*
T	con / *with*

3) Connessioni - *Connection port*

Codice - *Code*	Connessione - *Connection*
M10	M10
M12	M12

Codici per l'ordinazione - *Ordering information*

FL-2	**T**	**M12**
1*	2*	3*

50% OFF ALL PRICES

ACCESSORI
ACCESSORIES

FILTREC®
Technical Filtration

serie
FB-1

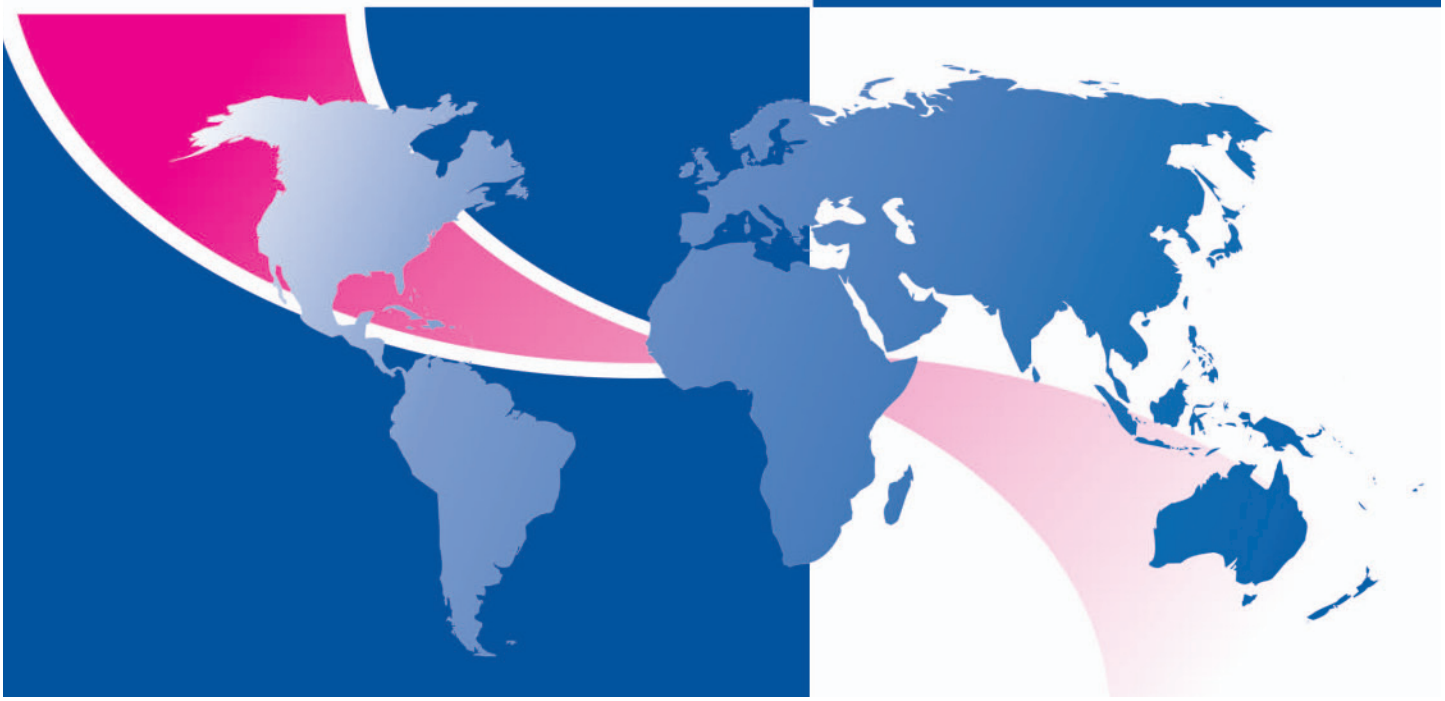

Serie FB-1

Filtri sfiato aria
Air breather filters

FILTER HOUSING

Technical Information

Description:	*Thread air breather filters.*
Max flow rate:	*FB1-10 200 l/min. (53 gpm)* *FB1-20 500 l/min. (132 gpm)* *FB1-20 1000 l/min. (264 gpm)*
Port Connection:	*BSP – Metric*
Materials:	*Zinc steel*

Informazioni dimensionali - *Overall dimensions*

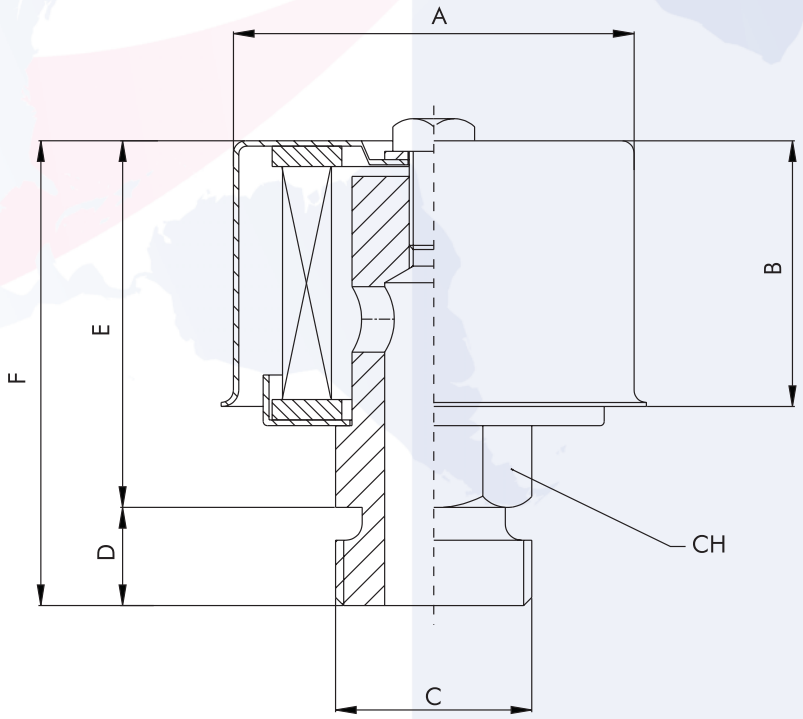

ORDER CODE	THREAD	LENGTH	O/D	MICRON	AIRFLOW	PRICE
FB110B1C05	1/4" BSP	54MM	48MM	5 MICRON	200 L/MIN	£14.10
FB110B1C10	1/4" BSP	54MM	48MM	10 MICRON	200 L/MIN	£14.10
FB110B1C40	1/4" BSP	54MM	48MM	40 MICRON	200 L/MIN	£14.63
FB110B2C05	3/8" BSP	54MM	48MM	5 MICRON	200 L/MIN	£15.26
FB110B2C10	3/8" BSP	54MM	48MM	10 MICRON	200 L/MIN	£15.26
FB110B2C40	3/8" BSP	54MM	48MM	40 MICRON	200 L/MIN	£15.90
FB120B3C05	1/2" BSP	69MM	67MM	5 MICRON	500 L/MIN	£19.72
FB120B3C10	1/2" BSP	69MM	67MM	10 MICRON	500 L/MIN	£19.72
FB120B3C40	1/2" BSP	69MM	67MM	40 MICRON	500 L/MIN	£20.35
FB120B4C05	3/4" BSP	69MM	67MM	5 MICRON	500 L/MIN	£28.94
FB120B4C10	3/4" BSP	69MM	67MM	10 MICRON	500 L/MIN	£28.94
FB120B4C40	3/4" BSP	69MM	67MM	40 MICRON	500 L/MIN	£29.57
FB130B5C05	1" BSP	91MM	108MM	5 MICRON	1000 L/MIN	£27.35
FB130B5C10	1" BSP	91MM	108MM	10 MICRON	1000 L/MIN	£27.35
FB130B5C40	1" BSP	91MM	108MM	40 MICRON	1000 L/MIN	£29.95

OPTIONAL EXTRAS

CONNECTION PORTS
METRIC THREADS AVAILABLE ON REQUEST

50% OFF ALL PRICES

1) Grandezza nominale - *Nominal size*

Codice - *Code*	A	B	C	D	E	F	CH
FB-1-10	48	32	B1	9	45	54	14
	48	32	B2	9	45	54	19
	48	32	M12	9	45	54	14
	48	32	M16	9	45	54	19
	48	32	M18	9	45	54	19
	48	32	M22	10	45	55	24
FB-1-20	67	50	B3	10	59	69	27
	67	50	B4	10	59	69	27
	67	50	M16	10	59	69	27
FB-1-30	108	61	B5	15	76	91	34

2) Connessioni - *Connection port*

Codice - *Code*	Connessione - *Connection*
B1	1/4" BSP
B2	3/8" BSP
B3	1/2" BSP
B4	3/4" BSP
B5	1" BSP
M12	M12 x 1,5
M16	M16 x 1,5
M18	M18 x 1,5
M22	M22 x 1,5

3) Grado di filtrazione - *Filtration ratings*

Codice - *Code*	Materiale - *Media*	Efficienza - *Efficiency*
C05	carta trattata *resin impregnated cellulose*	$ß_{05} \geq 2$
C10	carta trattata *resin impregnated cellulose*	$ß_{10} \geq 2$
C40	rete vellutata elettrostaticamente *electrostatically velvety wire*	$ß_{40} \geq 2$

Codici per l'ordinazione - *Ordering information*

FIltro *Filter*	**FB-1**	**10**	**B2**	**C10**
		1*	2*	3*

ACCESSORI
ACCESSORIES

FILTREC®
Technical Filtration

serie
FT

Serie FT

Tappi di riempimento con sfiato
Filler breather filters

FILTER HOUSING

Technical Information

Description: *Filler breathers filters*

Filter media: *Cellulose 10, 40µ*

Max flow rate:
- *FT-5 200 l/min (53 gpm)*
- *FT-7 and FT-8 500 l/min (132 gpm)*

Basket: *500µ*

Chain: *FT-8-../1 and FT-8-../2 are equipped with a connection chain between cap and flange.*

Materials:
- *Cap: chrome plated steel*
- *Basket: zinc steel*
- *Flange: zinc steel*
- *Gasket: cork*

ORDER CODE	OUTER DIAMETER	TOTAL LENGTH	WIDTH OF BASKET	LENGTH OF BASKET	MOUNTING	AIR RATING INNER ELEMENT	PRESSURISED RATING	PRICE
STANDARD FILLER BREATHERS								
FT5C10	52MM	112MM	29MM	64MM	3 HOLE P.C.D 41MM	10 MICRON	N/A	£13.97
FT5C40	52MM	112MM	29MM	64MM	3 HOLE P.C.D 41MM	40 MICRON	N/A	£12.83
FT8C101	83MM	135MM	78MM	78MM	6 HOLE P.C.D 73MM	10 MICRON	N/A	£15.58
FT8C102	83MM	205MM	148MM	148MM	6 HOLE P.C.D 73MM	10 MICRON	N/A	£20.22
FT8C401	83MM	135MM	78MM	78MM	6 HOLE P.C.D 73MM	40 MICRON	N/A	£15.58
FT8C402	83MM	205MM	148MM	148MM	6 HOLE P.C.D 73MM	40 MICRON	N/A	£20.22
STANDARD LOCKABLE FILLER BREATHERS								
FT8C1010L	83MM	135MM	78MM	78MM	6 HOLE P.C.D 73MM	10 MICRON	N/A	£22.13
FT8C1020L	83MM	205MM	148MM	148MM	6 HOLE P.C.D 73MM	10 MICRON	N/A	£28.20
FT8C4010L	83MM	135MM	78MM	78MM	6 HOLE P.C.D 73MM	40 MICRON	N/A	£24.18
FT8C4020L	83MM	205MM	148MM	148MM	6 HOLE P.C.D 73MM	40 MICRON	N/A	£30.50
PRESSURISED FILLER BREATHERS								
FT8C101V03	83MM	135MM	78MM	78MM	6 HOLE P.C.D 73MM	10 MICRON	0.35 BAR (5 PSI)	£38.53
FT8C101V07	83MM	135MM	78MM	78MM	6 HOLE P.C.D 73MM	10 MICRON	0.75 BAR (10.8 PSI)	£38.53
FT8C102V03	83MM	205MM	148MM	148MM	6 HOLE P.C.D 73MM	10 MICRON	0.35 BAR (5 PSI)	£40.12
FT8C102V07	83MM	205MM	148MM	148MM	6 HOLE P.C.D 73MM	10 MICRON	0.75 BAR (10.8 PSI)	£40.12
FT8C401V03	83MM	135MM	78MM	78MM	6 HOLE P.C.D 73MM	40 MICRON	0.35 BAR (5 PSI)	£32.75
FT8C401V07	83MM	135MM	78MM	78MM	6 HOLE P.C.D 73MM	40 MICRON	0.75 BAR (10.8 PSI)	£32.75
FT8C402V03	83MM	205MM	148MM	148MM	6 HOLE P.C.D 73MM	40 MICRON	0.35 BAR (5 PSI)	£34.34
FT8C402V07	83MM	205MM	148MM	148MM	6 HOLE P.C.D 73MM	40 MICRON	0.75 BAR (10.8 PSI)	£34.34
PRESSURISED LOCKABLE FILLER BREATHERS								
FT8C101V03L	83MM	135MM	78MM	78MM	6 HOLE P.C.D 73MM	10 MICRON	0.35 BAR (5 PSI)	£48.71
FT8C101V07L	83MM	135MM	78MM	78MM	6 HOLE P.C.D 73MM	10 MICRON	0.75 BAR (10.8 PSI)	£48.71
FT8C102V03L	83MM	205MM	148MM	148MM	6 HOLE P.C.D 73MM	10 MICRON	0.35 BAR (5 PSI)	£48.71
FT8C102V07L	83MM	205MM	148MM	148MM	6 HOLE P.C.D 73MM	10 MICRON	0.75 BAR (10.8 PSI)	£48.71
FT8C401V03L	83MM	135MM	78MM	78MM	6 HOLE P.C.D 73MM	40 MICRON	0.35 BAR (5 PSI)	£42.93
FT8C401V07L	83MM	135MM	78MM	78MM	6 HOLE P.C.D 73MM	40 MICRON	0.75 BAR (10.8 PSI)	£42.93
FT8C402V03L	83MM	205MM	148MM	148MM	6 HOLE P.C.D 73MM	40 MICRON	0.35 BAR (5 PSI)	£44.52
FT8C402V07L	83MM	205MM	148MM	148MM	6 HOLE P.C.D 73MM	40 MICRON	0.75 BAR (10.8 PSI)	£44.52

ORDER CODE	CAP WIDTH	TOTAL LENGTH	WIDTH OF BASKET	AIR RATING INNER ELEMENT	CONNECTION	PRESSURISED RATING	PRICE
THREADED FILLER BREATHERS							
FT7C10B300	75MM	67MM	75MM	10 MICRON	1/2" BSP	N/A	£21.04
FT7C10B400	75MM	67MM	75MM	10 MICRON	3/4" BSP	N/A	£21.04
FT7C40B300	75MM	67MM	75MM	40 MICRON	1/2" BSP	N/A	£21.04
FT7C40B400	75MM	67MM	75MM	40 MICRON	3/4" BSP	N/A	£21.04
PRESSURISED FILLER BREATHERS							
FT7C10B3V03	75MM	67MM	75MM	10 MICRON	1/2" BSP	0.35 BAR (5 PSI)	£35.35
FT7C10B3V07	75MM	67MM	75MM	10 MICRON	1/2" BSP	0.75 BAR (10.8 PSI)	£35.35
FT7C10B4V03	75MM	67MM	75MM	10 MICRON	3/4" BSP	0.35 BAR (5 PSI)	£35.35
FT7C10B4V07	75MM	67MM	75MM	10 MICRON	3/4" BSP	0.75 BAR (10.8 PSI)	£35.35
FT7C40B3V03	75MM	67MM	75MM	40 MICRON	1/2" BSP	0.35 BAR (5 PSI)	£35.35
FT7C40B3V07	75MM	67MM	75MM	40 MICRON	1/2" BSP	0.75 BAR (10.8 PSI)	£35.35
FT7C40B4V03	75MM	67MM	75MM	40 MICRON	3/4" BSP	0.35 BAR (5 PSI)	£35.35
FT7C40B4V07	75MM	67MM	75MM	40 MICRON	3/4" BSP	0.75 BAR (10.8 PSI)	£35.35

Informazioni dimesionali
Overall dimensions

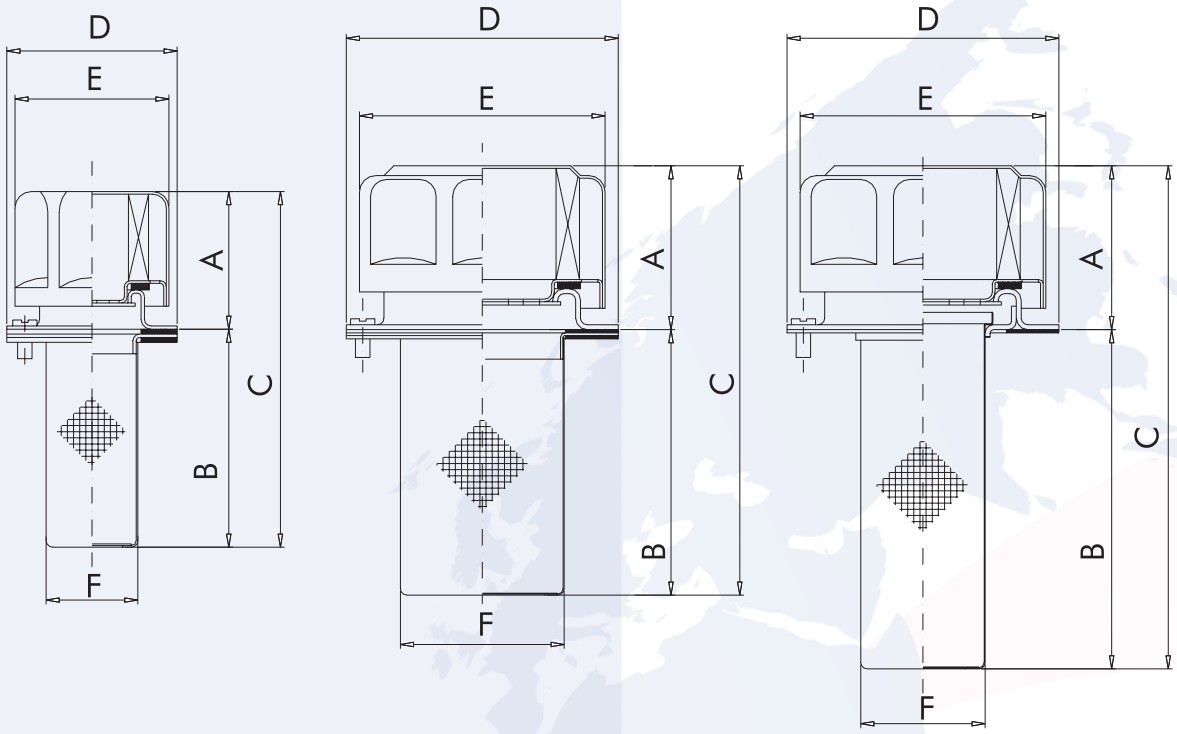

Foratura serbatoio
Tank hole dimensions

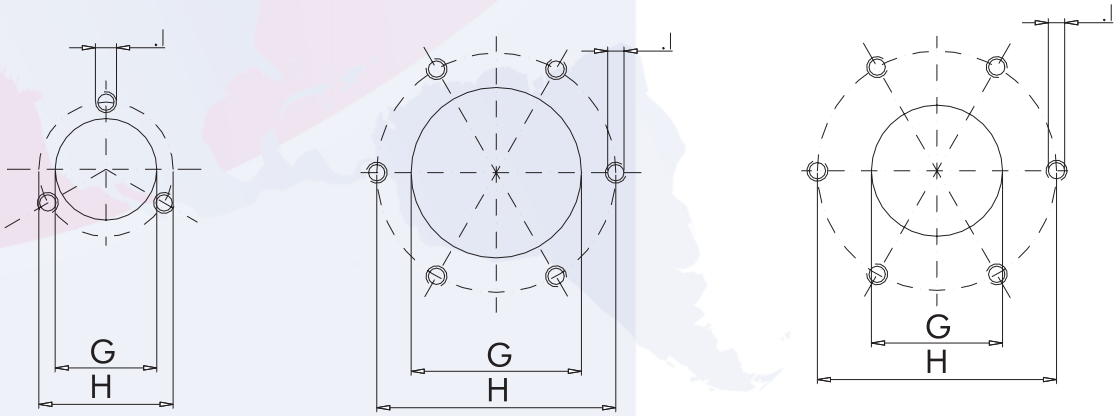

FT-5

FT-8.../1
FT-8.../2

FT-8.../F

50% OFF ALL PRICES

Informazioni dimesionali
Overall dimensions

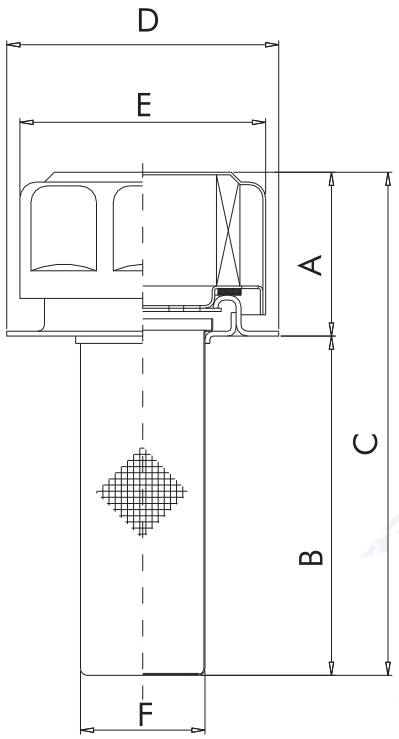

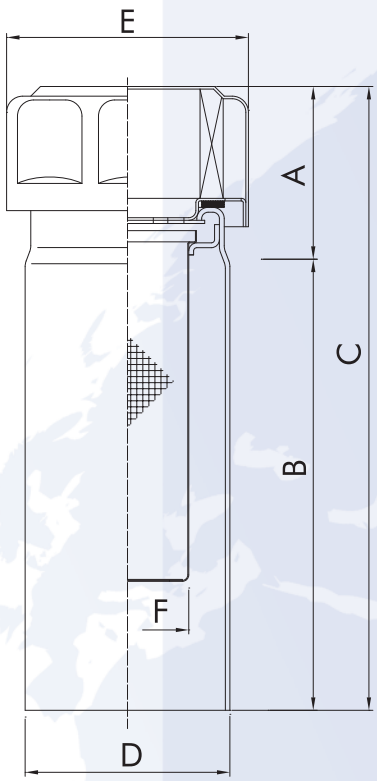

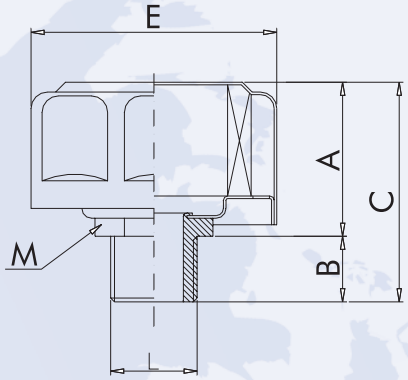

Foratura serbatoio
Tank hole dimensions

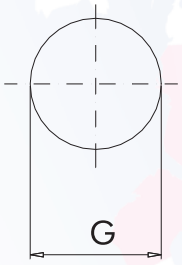

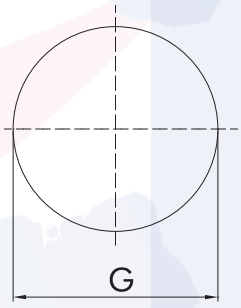

FT-8.../G FT-8.../S FT-7

1) Grandezza nominale - *Nominal size*

Codice - Code	A	B	C	D	E	F	G	H	I	L	M	Catenella - Chain
FT-5	42	65	107	52	47	27,5	31	41	M5	---	---	No
FT-7	47	20	67	---	75	---	---	---	---	3/4" BSP - NPT 1/2" BSP - NPT	32	No
FT-8-.../1	50	80	130	83	75	50	52	73	M5	---	---	Si / Yes
FT-8-.../2	50	150	200	83	75	50	52	73	M5	---	---	Si / Yes
FT-8-.../F	50	100	150	83	75	38	40	73	M5	---	---	No
FT-8-.../G	50	100	150	83	75	38	40	---	---	---	---	No
FT-8-.../S	50	133	183	63,5	75	38	64	---	---	---	---	No

2) Grado di filtrazione - *Filtration ratings*

Codice - *Code*	Materiale - *Media*	Efficienza - *Efficiency*
C10	carta trattata / *resin impregnated cellulose*	$\beta_{10} \geq 2$
C40	carta trattata / *resin impregnated cellulose*	$\beta_{40} \geq 2$

3) Connessioni - *Connection port*

Codice - *Code*	Connessione - *Connection*
B3	1/2 " BSP
B4	3/4" BSP
N3	1/2" NPT
N4	3/4" NPT

4) Valvola di pressurizzazione - *Pressurize valve*

Codice - *Code*	Tipo indicatore - *Indicator type*	Note
0	senza / *without*	
V03	taratura 0,35 Bar *setting 0,35 Bar (5 psi)*	Non disponibile per FT-5 *Not available for FT-5*
V07	taratura 0,75 Bar *setting 0,75 Bar (10,8 psi)*	

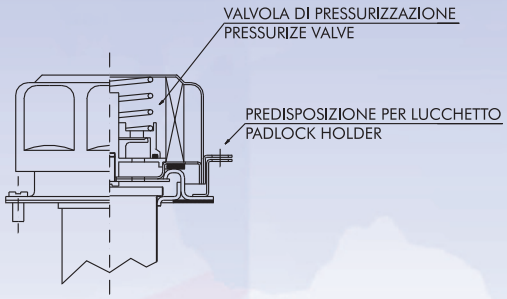

5) Predisposizione per lucchetto - *Padlock holder*

Codice - *Code*	Predisp. lucchetto - *Padlock holder*
0	senza / *without*
L	con / *with*

Non disponibile per FT-5 e FT-7
Not available for FT-5 and FT-7

Codici per l'ordinazione - *Ordering information*

Serie FT-5 e FT-8
FT-5 and FT-8 series

FT-8	**C10**	**/2**	**V07**	**L**
1*	2*	1*	4*	5*

Serie FT-7
FT-7 series

FT-7	**C10**	**B4**	**V07**
1*	2*	3*	4*

50% OFF ALL PRICES

GATES HYDRAULIC HOSE, FITTINGS & MACHINERY

HYDRAULIC HOSE M6K 772
HYDRAULIC HOSE M5K 773
HYDRAULIC HOSE M4K 774
HYDRAULIC HOSE M3K 775
HYDRAULIC HOSE M3KDL-XTF 776
HYDRAULIC HOSE CM2T 777
HYDRAULIC HOSE TH8 778
HYDRAULIC HOSE TH7 779
MEGACRIMP® FERRULES AND COUPLINGS 780
WORKSHOP MACHINERY 815
MOBILE SERVICE 816
FIELD SERVICE 817
CRIMPING MACHINES 818
CUTTING MACHINES 823
TOOLS 824

FLOWFIT®

Hydraulic Hose

Constant pressure

M6K

MEGASYS

-size	DN	"	"	mm	PSI	MPa	PSI	MPa	mm	kg/100m	REF.	PER METRE
-4	6	1/4	0.58	14.9	6000	42.0	24000	168.0	50	35	4M6K	£35.51

RECOMMENDED FOR High pressure hydraulic applications. Easy to route and to install in tight areas.

TUBE NBR (Nitrile) based.

REINFORCEMENT Two braids of high tensile steel wire.

COVER NBR/PVC based. MSHA approved.

TEMPERATURE RANGE -40°C to +100°C constant and +121°C intermittent. For water emulsions, etc. see page 86.

STANDARDS Gates proprietary. Meets or exceeds EN 857 2SC and ISO 11237 performance requirements.

COUPLINGS MegaCrimp®.

TYPE APPROVALS DNV, GL, LR, BV and MOD.

CHARACTERISTICS/BENEFITS

- 70% of EN 857 2SC and 50% of EN 853 2SN bend radius at rated working pressure.
- Superior flex impulse performance: tested to 600,000 impulse cycles.
- Lightweight.
- M6K hose is compatible with biodegradable hydraulic fluids like synthetic esters, polyglycols and vegetable oils as well as petroleum-based fluids.

Hydraulic Hose

Constant pressure

M5K

MEGASYS

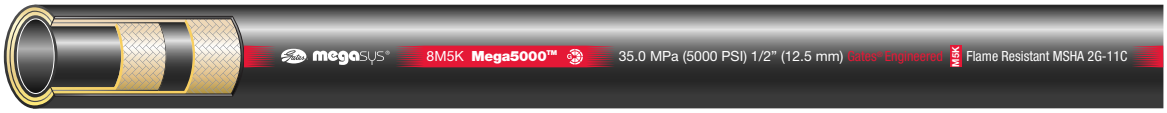

-size	DN	"	"	mm	PSI	MPa	PSI	MPa	mm	kg/100m	REF.	PER METRE
-4	6	1/4	0.54	13.7	5000	35.0	20000	140.0	50	30	4M5K	£52.60
-5	8	5/16	0.61	15.4	5000	35.0	20000	140.0	55	34	5M5K	£38.56
-6	10	3/8	0.69	17.5	5000	35.0	20000	140.0	65	41	6M5K	£39.88
-8	12	1/2	0.86	21.9	5000	35.0	20000	140.0	90	66	8M5K	£62.46

RECOMMENDED FOR High pressure hydraulic applications. Easy to route and to install in tight areas.

TUBE NBR (Nitrile) based.

REINFORCEMENT Two braids of high tensile steel wire.

COVER NBR/PVC based. MSHA approved.

TEMPERATURE RANGE -40°C to +100°C constant and +121°C intermittent. For water emulsions, etc. see page 86.

STANDARDS Gates proprietary. Meets or exceeds EN 857 2SC and ISO 11237 performance requirements.

COUPLINGS MegaCrimp®.

TYPE APPROVALS DNV, GL, LR, BV and MOD.

CHARACTERISTICS/BENEFITS

70% of EN 857 2SC and 50% of EN 853 2SN bend radius at rated working pressure.

Superior flex impulse performance: tested to 600,000 impulse cycles.

Lightweight.

M5K hose is compatible with biodegradable hydraulic fluids like synthetic esters, polyglycols and vegetable oils as well as petroleum-based fluids.

OPTIONAL

M5K-MTF: the complete range of M5K is also available with the Gates special MegaTuff™ cover which offers 300 times the abrasion resistance of the standard M5K cover as per ISO 6945, superior ozone and weathering resistance. M5K-MTF can also be used for in-oil (submersible) applications, please consult Gates Product Application Engineers for more info.

IMPORTANT

Please consult Gates Product Application Engineers for use of MegaTuff™ hose in reverse bending applications or for constant bending at minimum bend radius.

Hydraulic Hose

Constant pressure

M4K

MEGASYS

-size	DN	"	"	mm	PSI	MPa	PSI	MPa	mm	kg/100m	REF.	PER METRE
-4	6	1/4	0.54	13.7	4000	28.0	16000	112.0	50	33	4M4K	£39.92
-5	8	5/16	0.61	15.4	4000	28.0	16000	112.0	55	34	5M4K	£39.92
-6	10	3/8	0.69	17.5	4000	28.0	16000	112.0	65	46	6M4K	£40.70
-8	12	1/2	0.82	20.8	4000	28.0	16000	112.0	90	51	8M4K	£56.50
-10	16	5/8	0.98	25.0	4000	28.0	16000	112.0	100	74	10M4K	£67.95
-12	19	3/4	1.15	29.1	4000	28.0	16000	112.0	120	93	12M4K	£86.26

RECOMMENDED FOR High pressure hydraulic applications. Easy to route and to install in tight areas.

TUBE NBR (Nitrile) based.

REINFORCEMENT Two braids of high tensile steel wire.

COVER NBR/PVC based. MSHA approved.

TEMPERATURE RANGE -40°C to +100°C constant and +121°C intermittent. For water emulsions, etc. see page 86.

STANDARDS SAE 100R19. ISO 11237 R19. Meets or exceeds EN 857 2SC performance requirements.

COUPLINGS MegaCrimp®.

TYPE APPROVALS DNV, GL, LR, BV, ABS and MOD.

CHARACTERISTICS/BENEFITS

70% of EN 857 2SC and 50% of EN 853 2SN bend radius at rated working pressure.

Superior flex impulse performance: tested to 600,000 impulse cycles.

Lightweight.

Alternative to spiral hoses in high pressure lines where flexibility is required.

M4K hose is compatible with biodegradable hydraulic fluids like synthetic esters, polyglycols and vegetable oils as well as petroleum-based fluids.

OPTIONAL

M4K-MTF: the complete range of M4K is also available with the Gates special MegaTuff™ cover which offers 300 times the abrasion resistance of the standard M4K cover as per ISO 6945, superior ozone and weathering resistance. M4K-MTF can also be used for in-oil (submersible) applications, please consult Gates Product Application Engineers for more info.

M4K-XTF: the complete range of M4K is also available with the Gates special XtraTuff™ cover which offers 25 times the abrasion resistance of the standard M4K cover as per ISO 6945.

M4KH: for high-temperature applications, Gates recommends the M4KH hose range up to 121°C constant. Please refer to page 47.

IMPORTANT

Please consult Gates Product Application Engineers for use of MegaTuff™ hose in reverse bending applications or for constant bending at minimum bend radius.

Hydraulic Hose

Constant pressure

M3K

MEGASYS

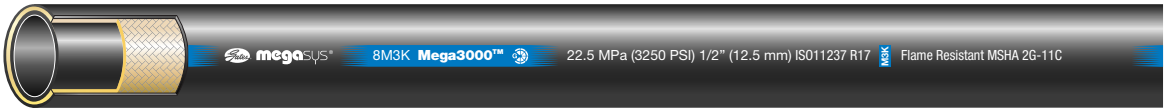

-size	DN	"	"	mm	PSI	MPa	PSI	MPa	mm	kg/100m	REF.	PER METRE
-4	6	1/4	0.48	12.2	3250	22.5	13000	90.0	50	17	4M3K	£34.90
-5	8	5/16	0.59	15.1	3250	22.5	13000	90.0	55	26	5M3K	£38.05
-6	10	3/8	0.63	16.0	3250	22.5	13000	90.0	65	28	6M3K	£38.05
-8	12	1/2	0.80	20.2	3250	22.5	13000	90.0	90	41	8M3K	£44.33
-10	16	5/8	0.99	25.2	3250	22.5	13000	90.0	100	73	10M3K	£56.01
-12	19	3/4	1.14	29.0	3250	22.5	13000	90.0	120	91	12M3K	£68.84
-16	25	1	1.48	37.7	3250	22.5	13000	90.0	150	155	16M3K	£125.04

RECOMMENDED FOR High pressure hydraulic applications. Easy to route and to install in tight areas.

TUBE NBR (Nitrile) based.

REINFORCEMENT -4 to -8: one braid of high tensile steel wire; -10 to -16: two braids of high tensile steel wire.

COVER NBR/PVC based. MSHA approved.

TEMPERATURE RANGE -40°C to +100°C constant and +121°C intermittent. For water emulsions, etc. see page 86.

STANDARDS SAE 100R17. ISO 11237 R17. Meets or exceeds EN 857 1SC/2SC performance requirements.

COUPLINGS MegaCrimp®.

TYPE APPROVALS DNV, GL, LR, BV, ABS and MOD.

CHARACTERISTICS/BENEFITS

70% of EN 857 1SC/2SC and 50% of EN 853 1SN/2SN bend radius at rated working pressure.

Exceeds working pressure requirements of R17.

Superior flex impulse performance: tested with MegaCrimp® to 600,000 impulse cycles.

Lightweight.

M3K hose is compatible with biodegradable hydraulic fluids like synthetic esters, polyglycols and vegetable oils as well as petroleum-based fluids.

OPTIONAL

M3K-MTF: the complete range of M3K is also available with the Gates special MegaTuff™ cover which offers 300 times the abrasion resistance of the standard M3K cover as per ISO 6945, superior ozone and weathering resistance. M3K-MTF can also be used for in-oil (submersible) applications, please consult Gates Product Application Engineers for more info.

M3K-XTF: the complete range of M3K is also available with the Gates special XtraTuff™ cover which offers 25 times the abrasion resistance of the standard M3K cover as per ISO 6945.

M3KH: for high-temperature applications, Gates recommends the M3KH hose range up to 121°C constant. Please refer to page 48.

IMPORTANT

Please consult Gates Product Application Engineers for use of MegaTuff™ hose in reverse bending applications or for constant bending at minimum bend radius.

Hydraulic Hose

Constant pressure

M3KDL-XTF

MEGASYS

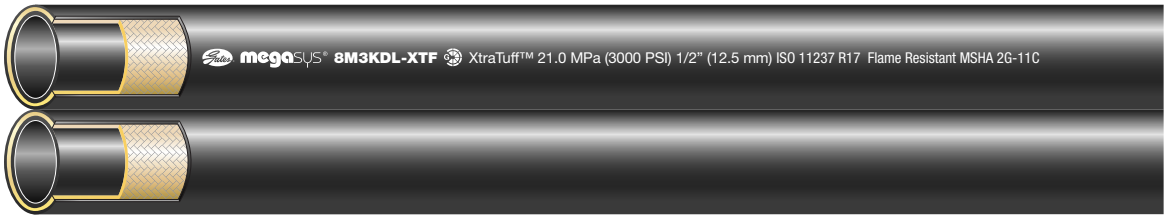

-size	DN	"	"	mm	PSI	MPa	PSI	MPa	mm	kg/100m	REF.	PER METRE
-4	6	1/4	0.48	12.2	3000	21.0	12000	84.0	50	54	4M3KDL-XTF	£31.33
-6	10	3/8	0.63	16.0	3000	21.0	12000	84.0	65	55	6M3KDL-XTF	£38.05
-8	12	1/2	0.80	20.2	3000	21.0	12000	84.0	90	80	8M3KDL-XTF	£44.32

RECOMMENDED FOR High pressure hydraulic applications. Easy to route and to install in tight areas.

TUBE NBR (Nitrile) based.

REINFORCEMENT One braid of high tensile steel wire

COVER XtraTuff™. MSHA approved.

TEMPERATURE RANGE -40°C to +100°C constant and +121°C intermittent. For water emulsions, etc. see page 86.

STANDARDS SAE 100R17. ISO 11237 R17. Meets or exceeds EN 857 1SC performance requirements.

COUPLINGS MegaCrimp®.

CHARACTERISTICS/BENEFITS

70% of EN 857 1SC and 50% of EN 853 1SN bend radius at rated working pressure.

Superior flex impulse performance: tested with MegaCrimp® to 600,000 impulse cycles.

Lightweight.

M3K hose is compatible with biodegradable hydraulic fluids like synthetic esters, polyglycols and vegetable oils as well as petroleum-based fluids.

Gates special XtraTuff™ cover which offers 25 times the abrasion resistance of the standard M3K cover as per ISO 6945.

IMPORTANT

Gates recommends minimum split length of 250 mm depending on the application. Do not expose hose reinforcement when splitting hoses.

Hydraulic Hose

Exceeds ISO/EN/SAE standard

CM2T

ISO 11237 2SC R16

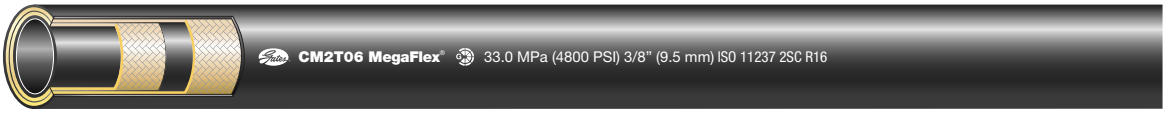

-size	DN	"	"	mm	PSI	MPa	PSI	MPa	mm	kg/100m	REF.	PER METRE
-4	6	1/4	0.55	14.1	5800	40.0	23200	160.0	50	31	CM2T04	£38.79
-5	8	5/16	0.61	15.5	5000	35.0	20000	140.0	55	35	CM2T05	£43.33
-6	10	3/8	0.70	17.7	4800	33.0	19200	132.0	65	42	CM2T06	£44.33
-8	12	1/2	0.82	20.8	4000	27.5	16000	110.0	90	51	CM2T08	£51.06
-10	16	5/8	0.97	24.6	3625	25.0	14500	100.0	100	70	CM2T10	£60.20
-12	19	3/4	1.09	27.8	3100	21.5	12400	86.0	120	81	CM2T12	£70.13
-16	25	1	1.41	35.8	2400	16.5	9600	66.0	150	115	CM2T16	£106.15

RECOMMENDED FOR High pressure hydraulic applications. Easy to route and to install in tight areas.

TUBE NBR (Nitrile) based.

REINFORCEMENT Two braids of high tensile steel wire.

COVER SBR based.

TEMPERATURE RANGE -40°C to +100°C constant and +121°C intermittent. For water emulsions, etc. see page 86.

STANDARDS EN 857 2SC. ISO 11237 2SC R16. SAE 100R16.

COUPLINGS MegaCrimp®.

TYPE APPROVALS DNV, GL, LR and BV.

CHARACTERISTICS/BENEFITS 70% of EN 857 2SC.

Superior flex impulse performance.

Lightweight.

CM2T hose is compatible with biodegradable hydraulic fluids like synthetic esters, polyglycols and vegetable oils as well as petroleum-based fluids.

OPTIONAL

CM2T-MTF: the complete range of CM2T is also available with the Gates special MegaTuff™ cover which offers 300 times the abrasion resistance of the standard CM2T cover as per ISO 6945, superior ozone and weathering resistance. CM2T-MTF can also be used for in-oil (submersible) applications, please consult Gates Product Application Engineers for more info.

IMPORTANT

Please consult Gates Product Application Engineers for use of MegaTuff™ hose in reverse bending applications or for constant bending at minimum bend radius.

Hydraulic Hose

Exceeds ISO/EN/SAE standard

TH8

ISO 3949 R8

-size	DN	"	"	mm	PSI	MPa	PSI	MPa	mm	kg/100m	REF.	PER METRE
-4	6	1/4	0.61	15.5	5000	35.0	20000	140.0	50	18	4TH8	£45.43
-6	10	3/8	0.76	19.1	4000	28.0	16000	112.0	65	31	6TH8	£53.78
-8	12	1/2	0.87	22.1	3500	24.5	14000	98.0	100	34	8TH8	£53.70
-12	19	3/4	1.13	28.7	2250	15.7	9000	63.0	165	38	12TH8	£103.37
-16	25	1	1.45	36.8	2000	14.0	8000	56.0	250	57	16TH8	£158.13

RECOMMENDED FOR High pressure hydraulic applications, especially material handling equipment with mast and pulley systems like forklifts, aerial lifting, hydraulic boom cranes and many others.

TUBE PA (Nylon) based.

REINFORCEMENT Two fibre braids.

COVER PU (Polyurethane) based. Black TH8 is perforated for use in general hydraulic and pneumatic service.

TEMPERATURE RANGE -53°C to +93°C. Maximum of +70°C for water, water/oil emulsions and water glycol.

STANDARDS SAE 100R8. ISO 3949 R8. EN 855 R8.

COUPLINGS MegaCrimp®.

Hydraulic Hose

Exceeds ISO/EN/SAE standard

TH7

ISO 3949 R7

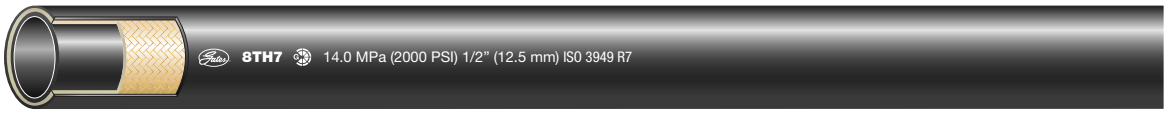

-size	DN	"	"	mm	PSI	MPa	PSI	MPa	mm	kg/100m	REF.	PER METRE
-4	6	1/4	0.50	12.7	2750	19.2	11000	76.8	30	8	4TH7	£23.47
-5	8	5/16	0.56	14.7	2500	17.5	10000	70.0	45	10	5TH7	£26.20
-6	10	3/8	0.64	16.4	2250	15.7	9000	62.8	50	14	6TH7	£29.79
-8	12	1/2	0.80	20.3	2000	14.0	8000	56.0	75	21	8TH7	£53.53
-12	19	3/4	1.05	26.6	1250	8.7	5000	34.8	130	29	12TH7	£73.71
-16	25	1	1.32	33.4	1000	7.0	4000	28.0	250	40	16TH7	£124.72

RECOMMENDED FOR High pressure hydraulic applications, especially material handling equipment with mast and pulley systems like forklifts, aerial lifting, hydraulic boom cranes and many others.

TUBE PA (Nylon) based.

REINFORCEMENT -4 to -6: spiralled synthetic fibre; -8 to -16: one fibre braid.

COVER PU (Polyurethane) based. Black TH7 is perforated for use in general hydraulic and pneumatic service.

TEMPERATURE RANGE -53°C to +93°C. Maximum of +70°C for water, water/oil emulsions and water glycol.

STANDARDS SAE 100R7. ISO 3949 R7. EN 855 R7.

COUPLINGS MegaCrimp®.

OPTIONAL

Ω

TH7NC: the complete range (-4 up to -16) is also available in a non-conductive version. This non-conductive hose has an orange polyurethane cover and is non-perforated for applications requiring electrical non-conductivity. TH7NC meets the SAE 100R7 Electrical Conductivity Test.

MegaCrimp®

NO-SKIVE FERRULES

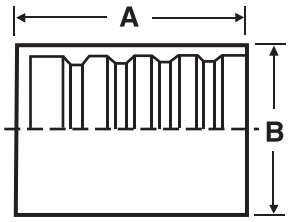

D			A	B	REF.	
-size	DN	"	mm	mm	G	
-24	40	1.1/2	75.8	70.0	24GSP1F-2	£74.33
-32	50	2	90.0	83.5	32GSP1F-2	£106.53

Note: Use GSP1F-4 ferrule for 4-spiral wire hose. For 6-spiral wire hose use 1-piece GSH-coupling.

BSP MBSPT

Male BSP taper.

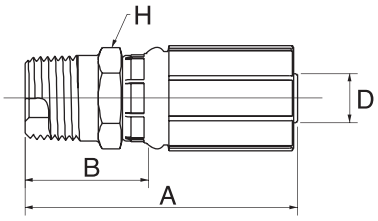

D				A	B	H	REF.	
-size	DN	"		mm	mm	mm	G	
-4	6	1/4	R 1/4" - 19 BSP	47.9	24.8	14.0	4G4MBSPT	£15.20
-4	6	1/4	R 3/8" - 19 BSP	49.1	26.0	19.0	4G6MBSPT	£25.33
-5	8	5/16	R 3/8" - 19 BSP	50.0	26.1	19.0	5G6MBSPT	£26.35
-6	10	3/8	R 3/8" - 19 BSP	49.5	26.1	19.0	6G6MBSPT	£14.76
-6	10	3/8	R 1/2" - 14 BSP	54.3	30.9	22.0	6G8MBSPT	£29.36
-8	12	1/2	R 3/8" - 19 BSP	59.5	27.0	22.0	8G6MBSPT	£32.35
-8	12	1/2	R 1/2" - 14 BSP	63.3	30.9	22.0	8G8MBSPT	£19.93
-10	16	5/8	R 5/8" - 14 BSP	69.9	32.4	25.0	10G10MBSPT	£43.99
-12	20	3/4	R 3/4" - 14 BSP	74.1	35.7	32.0	12G12MBSPT	£37.84
-16	25	1	R 1" - 11 BSP	87.5	41.6	36.0	16G16MBSPT	£66.12
-32	50	2	R 2" - 11 BSP	158.0	66.0	70.0	32GSP32MBSPT	£170.96

Unless otherwise stated the coupling meets the pressure rating requirements of the respective international standard.

BSP FBSPORX

Female BSP 'O' ring swivel. 60° cone.

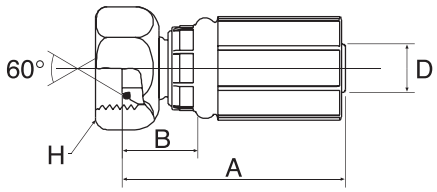

D				A	B	H	REF.	
-size	DN	"		mm	mm	mm	G	
-4	6	1/4	G 1/8" - 28 BSP	41.1	18.0	14.0	4G2FBSPX (1)	£25.91
-4	6	1/4	G 1/4" - 19 BSP	43.0	17.0	19.0	4G4FBSPORX	£11.24
-4	6	1/4	G 3/8" - 19 BSP	44.0	18.0	22.0	4G6FBSPORX	£11.24
-5	8	5/16	G 3/8" - 19 BSP	46.0	18.0	22.0	5G6FBSPORX	£15.90
-5	8	5/16	G 1/2" - 14 BSP	46.0	18.0	27.0	5G8FBSPORX	£19.67
-6	10	3/8	G 3/8" - 19 BSP	44.1	16.2	22.0	6G6FBSPORX	£13.22
-6	10	3/8	G 1/2" - 14 BSP	45.8	17.9	27.0	6G8FBSPORX	£12.97
-8	12	1/2	G 3/8" - 19 BSP	59.2	21.7	22.0	8G6FBSPORX	£19.48
-8	12	1/2	G 1/2" - 14 BSP	55.5	17.8	27.0	8G8FBSPORX	£14.54
-8	12	1/2	G 5/8" - 14 BSP	57.2	19.7	30.0	8G10FBSPORX	£31.38
-8	12	1/2	G 3/4" - 14 BSP	59.0	21.5	32.0	8G12FBSPORX	£49.84
-10	16	5/8	G 5/8" - 14 BSP	56.6	19.1	30.0	10G10FBSPORX	£21.60
-10	16	5/8	G 3/4" - 14 BSP	59.0	21.5	32.0	10G12FBSPORX	£26.82
-12	20	3/4	G 3/4" - 14 BSP	71.0	20.0	32.0	12G12FBSPORX	£51.56
-12	20	3/4	G 1" - 11 BSP	73.6	22.6	41.0	12G16FBSPORX	£51.56
-16	25	1	G 3/4" - 14 BSP	82.7	25.9	32.0	16G12FBSPORX	£59.23
-16	25	1	G 1" - 11 BSP	83.8	27.0	41.0	16G16FBSPORX	£38.54
-20	32	1.1/4	G 1.1/4" - 11 BSP	88.5	29.5	50.0	20G20FBSPORX	£128.13
-24	40	1.1/2	G 1.1/2" - 11 BSP	125.0	51.3	55.0	24GSP24FBSPORX	£106.53
-32	50	2	G 2" - 11 BSP	152.0	60.0	70.0	32GSP32FBSPORX	£170.96

(1) without 'O' ring.

Unless otherwise stated the coupling meets the pressure rating requirements of the respective international standard.

MegaCrimp®

BSP FBSPORX45

Female BSP 'O' ring swivel. 60° cone. 45° swept elbow. Drop dimensions meet ISO 12151-6.

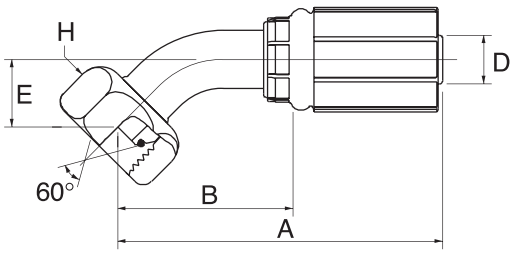

D				A	B	E	H	REF.	
-size	DN	"		mm	mm	mm	mm	G	
-4	6	1/4	G 1/4" - 19 BSP	57.1	31.1	11.5	19.0	4G4FBSPORX45	£22.27
-4	6	1/4	G 3/8" - 19 BSP	63.2	37.1	17.7	22.0	4G6FBSPORX45	£27.52
-5	8	5/16	G 3/8" - 19 BSP	66.6	38.6	16.8	22.0	5G6FBSPORX45	£27.79
-6	10	3/8	G 3/8" - 19 BSP	66.9	39.0	15.2	22.0	6G6FBSPORX45	£21.52
-6	10	3/8	G 1/2" - 14 BSP	71.0	43.0	19.3	27.0	6G8FBSPORX45	£29.36
-8	12	1/2	G 1/2" - 14 BSP	81.3	43.9	17.0	27.0	8G8FBSPORX45	£26.08
-8	12	1/2	G 5/8" - 14 BSP	91.0	53.5	23.0	30.0	8G10FBSPORX45	£47.64
-10	16	5/8	G 5/8" - 14 BSP	89.6	52.1	21.3	30.0	10G10FBSPORX45	£36.54
-10	16	5/8	G 3/4" - 14 BSP	99.5	62.0	31.2	32.0	10G12FBSPORX45	£59.83
-12	20	3/4	G 3/4" - 14 BSP	115.4	64.4	28.3	32.0	12G12FBSPORX45	£45.00
-16	25	1	G 1" - 11 BSP	135.6	78.8	30.9	41.0	16G16FBSPORX45	£74.53
-20	32	1.1/4	G 1.1/4" - 11 BSP	139.6	93.4	37.5	50.0	20G20FBSPORX45	£156.63
-24	40	1.1/2	G 1.1/2" - 11 BSP	214.5	140.8	49.7	55.0	24GSP24FBSPORX45	£158.55
-32	50	2	G 2" - 11 BSP	276.1	184.1	62.3	70.0	32GSP32FBSPORX45	£222.98

Unless otherwise stated the coupling meets the pressure rating requirements of the respective international standard.

MegaCrimp®

BSP FBSPORX90

Female BSP 'O' ring swivel. 60° cone. 90° swept elbow. Drop dimensions meet ISO 12151-6.

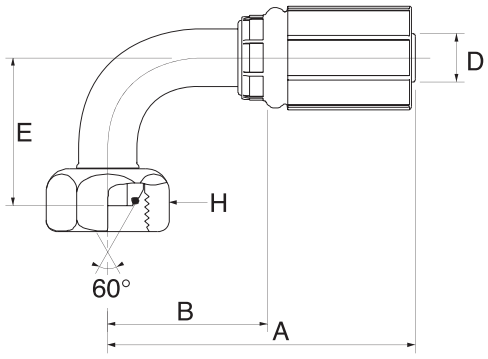

D				A	B	E	H	REF.	
-size	DN	"		mm	mm	mm	mm	G	
-4	6	1/4	G 1/4" - 19 BSP	52.5	26.5	23.3	19.0	4G4FBSPORX90	£20.61
-4	6	1/4	G 3/8" - 19 BSP	50.6	24.3	32.0	22.0	4G6FBSPORX90	£21.18
-5	8	5/16	G 3/8" - 19 BSP	58.0	30.0	32.0	22.0	5G6FBSPORX90	£27.79
-6	10	3/8	G 3/8" - 19 BSP	61.9	34.0	32.0	22.0	6G6FBSPORX90	£20.92
-6	10	3/8	G 1/2" - 14 BSP	60.1	32.2	37.5	27.0	6G8FBSPORX90	£27.22
-8	12	1/2	G 1/2" - 14 BSP	78.0	40.5	37.3	27.0	8G8FBSPORX90	£25.33
-8	12	1/2	G 5/8" - 14 BSP	81.5	44.0	46.0	30.0	8G10FBSPORX90	£48.29
-10	16	5/8	G 5/8" - 14 BSP	84.1	46.6	46.0	30.0	10G10FBSPORX90	£36.27
-10	16	5/8	G 3/4" - 14 BSP	84.1	46.6	60.0	32.0	10G12FBSPORX90	£60.59
-12	20	3/4	G 3/4" - 14 BSP	107.0	56.0	60.0	32.0	12G12FBSPORX90	£44.27
-12	20	3/4	G 1" - 11 BSP	112.2	61.2	70.0	41.0	12G16FBSPORX90	£80.62
-16	25	1	G 3/4" - 14 BSP	108.8	52.0	54.1	32.0	16G12FBSPORX90	£117.38
-16	25	1	G 1" - 11 BSP	131.1	74.3	70.0	41.0	16G16FBSPORX90	£73.14
-16	25	1	G 1.1/4" - 11 BSP	131.1	74.3	80.0	50.0	16G20FBSPORX90	£111.64
-20	32	1.1/4	G 1.1/4" - 11 BSP	129.1	82.8	80.0	50.0	20G20FBSPORX90	£155.99
-24	40	1.1/2	G 1.1/2" - 11 BSP	194.6	120.9	100.0	55.0	24GSP24FBSPORX90	£158.55
-32	50	2	G 2" - 11 BSP	254.7	162.7	129.1	70.0	32GSP32FBSPORX90	£222.98

Unless otherwise stated the coupling meets the pressure rating requirements of the respective international standard.

BSP FBSPORX90BL

Female BSP 'O' ring swivel. 60° cone. 90° block elbow.

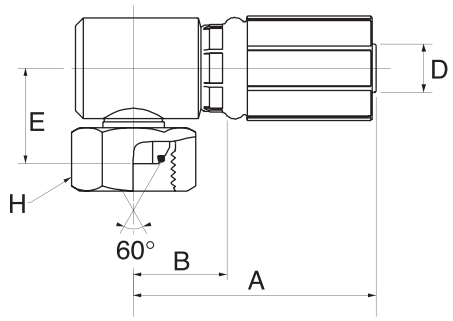

D				A	B	E	H	REF.	
-size	DN	"		mm	mm	mm	mm	G	
-4	6	1/4	G 1/4" - 19 BSP	44.2	18.2	18.0	19.0	4G4FBSPORX90BL	£21.88
-4	6	1/4	G 3/8" - 19 BSP	46.0	20.0	21.5	22.0	4G6FBSPORX90BL	£29.85
-6	10	3/8	G 3/8" - 19 BSP	47.9	20.0	21.5	22.0	6G6FBSPORX90BL	£26.54
-6	10	3/8	G 1/2" - 14 BSP	51.4	23.5	24.0	27.0	6G8FBSPORX90BL	£33.54
-8	12	1/2	G 1/2" - 14 BSP	55.9	23.5	24.0	27.0	8G8FBSPORX90BL	£33.03
-8	12	1/2	G 5/8" - 14 BSP	55.9	23.5	25.2	30.0	8G10FBSPORX90BL	£58.96
-10	16	5/8	G 5/8" - 14 BSP	62.4	24.9	27.6	30.0	10G10FBSPORX90BL	£74.41
-12	20	3/4	G 3/4" - 14 BSP	78.0	27.0	34.7	32.0	12G12FBSPORX90BL	£53.15
-16	25	1	G 3/4" - 14 BSP	86.2	29.4	37.8	32.0	16G12FBSPORX90BL	£105.94
-16	25	1	G 1" - 11 BSP	80.5	34.6	36.1	41.0	16G16FBSPORX90BL	£38.15

Unless otherwise stated the coupling meets the pressure rating requirements of the respective international standard.

MegaCrimp®

BSP MBSPP

Male BSP parallel. 60° inverted cone.

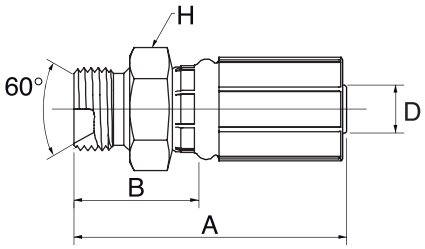

D				A	B	H	REF.	
-size	DN	"		mm	mm	mm	G	
-4	6	1/4	G 1/4" - 19 BSP	51.5	25.8	19.0	4G4MBSPP	£14.90
-4	6	1/4	G 3/8" - 19 BSP	51.8	25.8	22.0	4G6MBSPP	£16.32
-4	6	1/4	G 1/2" - 14 BSP	59.5	33.5	27.0	4G8MBSPP	£19.44
-5	8	5/16	G 1/4" - 19 BSP	53.5	25.5	19.0	5G4MBSPP	£46.85
-5	8	5/16	G 3/8" - 19 BSP	53.8	25.8	22.0	5G6MBSPP	£23.24
-6	10	3/8	G 1/4" - 19 BSP	52.0	24.1	19.0	6G4MBSPP	£71.57
-6	10	3/8	G 3/8" - 19 BSP	55.0	27.1	22.0	6G6MBSPP	£12.95
-6	10	3/8	G 1/2" - 14 BSP	60.0	32.1	27.0	6G8MBSPP	£18.44
-8	12	1/2	G 3/8" - 19 BSP	63.5	26.0	22.0	8G6MBSPP	£23.72
-8	12	1/2	G 1/2" - 14 BSP	69.0	31.5	27.0	8G8MBSPP	£16.30
-8	12	1/2	G 5/8" - 14 BSP	71.0	33.5	30.0	8G10MBSPP	£54.23
-10	16	5/8	G 5/8" - 14 BSP	73.5	36.0	30.0	10G10MBSPP	£30.08
-10	16	5/8	G 3/4" - 14 BSP	71.5	34.0	32.0	10G12MBSPP	£32.35
-12	20	3/4	G 3/4" - 14 BSP	85.0	34.0	32.0	12G12MBSPP	£29.34
-16	25	1	G 1" - 11 BSP	101.0	44.2	41.0	16G16MBSPP	£50.73
-20	32	1.1/4	G 1" - 11 BSP	104.5	45.5	46.0	20G16MBSPP	£145.73
-20	32	1.1/4	G 1.1/4" - 11 BSP	110.0	51.0	50.0	20G20MBSPP	£155.44
-24	40	1.1/2	G 1.1/2" - 11 BSP	130.0	56.4	55.0	24GSP24MBSPP	£106.53
-32	50	2	G 2" - 11 BSP	148.8	56.8	70.0	32GSP32MBSPP	£170.96

BSP MBSPPBKHD

Male BSP parallel. 60° inverted cone (Bulkhead).

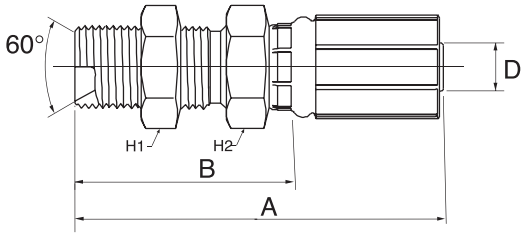

D				A	B	H1	H2	REF.	
-size	DN	"		mm	mm	mm	mm	G	
-4	6	1/4	G 1/4" - 19 BSP	68.0	42.0	19.0	19.0	4G4MBSPPBKHD	£59.95
-6	10	3/8	G 3/8" - 19 BSP	74.0	46.1	22.0	22.0	6G6MBSPPBKHD	£75.64
-8	12	1/2	G 1/2" - 14 BSP	88.5	51.0	27.0	27.0	8G8MBSPPBKHD	£94.62
-10	16	5/8	G 5/8" - 14 BSP	90.5	53.0	30.0	30.0	10G10MBSPPBKHD	£56.87
-12	20	3/4	G 3/4" - 14 BSP	104.0	53.0	32.0	32.0	12G12MBSPPBKHD	£123.64
-16	25	1	G 1" - 11 BSP	121.2	64.4	41.0	41.0	16G16MBSPPBKHD	£151.83

Unless otherwise stated the coupling meets the pressure rating requirements of the respective international standard.

BSP FBFFX

Female BSP flat face swivel.

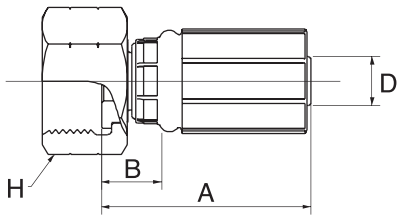

D				A	B	H	REF.	
-size	DN	"		mm	mm	mm	G	
-5	8	5/16	G 1/2" - 14 BSP	45.5	17.5	27.0	5G8FBFFX	£58.62
-6	10	3/8	G 3/8" - 19 BSP	46.0	18.1	22.0	6G6FBFFX	£29.40
-6	10	3/8	G 1/2" - 14 BSP	45.5	17.6	27.0	6G8FBFFX	£19.02
-8	12	1/2	G 1/2" - 14 BSP	55.5	18.0	27.0	8G8FBFFX	£20.22
-8	12	1/2	G 5/8" - 14 BSP	56.0	18.5	30.0	8G10FBFFX	£66.25
-8	12	1/2	G 3/4" - 14 BSP	52.5	15.0	32.0	8G12FBFFX	£55.93
-10	16	5/8	G 3/4" - 14 BSP	52.5	15.0	32.0	10G12FBFFX	£36.23
-12	20	3/4	G 3/4" - 14 BSP	68.5	17.5	32.0	12G12FBFFX	£38.69

BSP BSPBJ

BSP banjo.

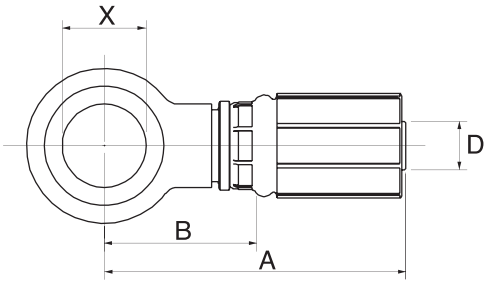

D				A	B	X	REF.	
-size	DN	"		mm	mm	mm	G	
-4	6	1/4	1/4" - BSP	56.3	30.3	13.2	4G4BSPBJ	£27.33
-4	6	1/4	3/8" - BSP	58.3	32.3	16.8	4G6BSPBJ	£72.10
-6	10	3/8	1/4" - BSP	58.5	30.6	13.2	6G4BSPBJ	£70.70
-6	10	3/8	3/8" - BSP	60.3	32.4	16.8	6G6BSPBJ	£36.17
-6	10	3/8	1/2" - BSP	62.7	34.8	21.0	6G8BSPBJ	£70.70
-8	12	1/2	1/2" - BSP	75.7	38.2	21.0	8G8BSPBJ	£86.03
-12	20	3/4	3/4" - BSP	94.7	43.7	26.5	12G12BSPBJ	£126.14

-4 to -12 size are 20.0 MPa (2900 psi).

Unless otherwise stated the coupling meets the pressure rating requirements of the respective international standard.

MegaCrimp®

JIC 37° FJX

Female JIC swivel. 37° inverted cone.

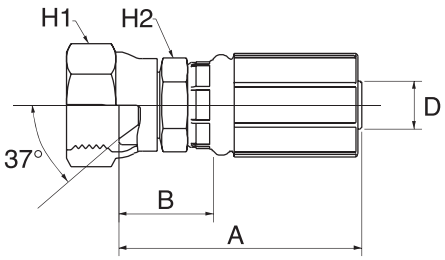

D				A	B	H1	H2	REF.	
-size	DN	"		mm	mm	mm	mm	G	
-4	6	1/4	7/16" - 20 UNF	47.6	21.3	14.0	15.0	4G4FJX	£11.59
-4	6	1/4	1/2" - 20 UNF	49.2	22.9	17.0	15.0	4G5FJX	£17.74
-4	6	1/4	9/16" - 18 UNF	51.1	25.1	19.0	15.0	4G6FJX	£14.08
-5	8	5/16	1/2" - 20 UNF	53.0	25.0	17.0	17.0	5G5FJX	£22.07
-5	8	5/16	9/16" - 18 UNF	55.1	27.1	19.0	17.0	5G6FJX	£22.51
-6	10	3/8	7/16" - 20 UNF	44.5	16.6	14.0	15.9	6G4FJX	£49.50
-6	10	3/8	1/2" - 20 UNF	45.0	17.1	17.0	17.0	6G5FJX	£46.83
-6	10	3/8	9/16" - 18 UNF	53.0	24.2	19.0	18.0	6G6FJX	£11.96
-6	10	3/8	3/4" - 16 UNF	56.3	27.5	24.0	18.0	6G8FJX	£16.05
-6	10	3/8	7/8" - 14 UNF	56.3	27.5	27.0	18.0	6G10FJX	£24.15
-8	12	1/2	9/16" - 18 UNF	57.0	19.5	19.0	20.6	8G6FJX	£11.72
-8	12	1/2	3/4" - 16 UNF	62.8	27.3	24.0	22.0	8G8FJX	£16.05
-8	12	1/2	7/8" - 14 UNF	62.8	27.3	27.0	22.0	8G10FJX	£11.08
-8	12	1/2	1.1/16" - 12 UN	62.8	27.3	32.0	22.0	8G12FJX	£31.48
-10	16	5/8	3/4" - 16 UNF	61.0	23.5	24.0	24.0	10G8FJX	£42.42
-10	16	5/8	7/8" - 14 UNF	66.0	28.5	27.0	24.0	10G10FJX	£22.11
-10	16	5/8	1.1/16" - 12 UN	66.4	28.9	31.8	24.0	10G12FJX	£30.53
-10	16	5/8	1.3/16" - 12 UN	70.0	32.5	36.0	24.0	10G14FJX	£66.17
-12	20	3/4	7/8" - 14 UNF	122.0	71.0	27.0	27.0	12G10FJX	£34.32
-12	20	3/4	1.1/16" - 12 UN	80.0	29.0	32.0	30.0	12G12FJX	£28.34
-12	20	3/4	1.3/16" - 12 UN	80.8	29.8	36.0	30.0	12G14FJX	£41.79
-12	20	3/4	1.5/16" - 12 UN	81.1	30.1	41.0	30.0	12G16FJX	£51.79
-16	25	1	1.1/16" - 12 UN	86.0	29.2	31.8	34.9	16G12FJX	£88.81
-16	25	1	1.3/16" - 12 UN	86.0	29.2	34.9	34.9	16G14FJX	£72.82
-16	25	1	1.5/16" - 12 UN	94.2	37.4	41.0	41.0	16G16FJX	£42.15
-16	25	1	1.5/8" - 12 UN	93.0	36.2	50.8	39.7	16G20FJX	£89.32
-20	32	1.1/4	1.5/8" - 12 UN	100.0	41.0	50.8	44.5	20G20FJX	£123.38
-20	32	1.1/4	1.7/8" - 12 UN	103.5	44.5	57.2	47.6	20G24FJX	£138.69
-24	40	1.1/2	1.7/8" - 12 UN	124.0	50.4	60.0	55.0	24GSP24FJX	£138.73
-32	50	2	2.1/2" - 12 UN	148.0	56.0	75.0	65.0	32GSP32FJX	£180.86

Unless otherwise stated the coupling meets the pressure rating requirements of the respective international standard.

MegaCrimp®

JIC 37° FJX45S

Female JIC swivel. 37° inverted cone. 45° swept elbow. Short drop (-4 to -16 drop dimensions meet ISO 12151-5).

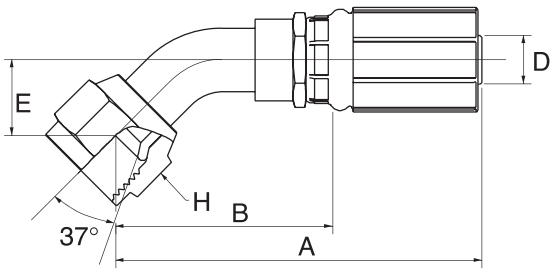

D				A	B	E	H	REF.	
-size	DN	"		mm	mm	mm	mm	G	
-4	6	1/4	7/16" - 20 UNF	69.7	43.7	10.0	14.0	4G4FJX45S	£22.07
-4	6	1/4	1/2" - 20 UNF	65.8	39.7	11.0	17.0	4G5FJX45-011	£30.08
-4	6	1/4	9/16" - 18 UNF	77.8	51.8	11.0	19.0	4G6FJX45S	£21.16
-5	8	5/16	1/2" - 20 UNF	68.3	40.3	11.0	17.0	5G5FJX45-011	£57.88
-5	8	5/16	9/16" - 18 UNF	72.4	44.4	11.0	19.0	5G6FJX45S	£25.40
-6	10	3/8	7/16" - 20 UNF	72.7	44.8	10.0	14.0	6G4FJX45S	£23.87
-6	10	3/8	9/16" - 18 UNF	77.5	49.6	11.0	19.0	6G6FJX45S	£20.80
-6	10	3/8	3/4" - 16 UNF	89.1	61.6	15.0	24.0	6G8FJX45S	£26.78
-8	12	1/2	3/4" - 16 UNF	86.9	49.5	15.0	24.0	8G8FJX45S	£27.14
-8	12	1/2	7/8" - 14 UNF	96.8	59.4	16.0	27.0	8G10FJX45S	£34.00
-10	16	5/8	7/8" - 14 UNF	96.4	59.0	16.0	27.0	10G10FJX45S	£31.12
-10	16	5/8	1.1/16" - 12 UN	116.0	78.5	21.0	32.0	10G12FJX45S	£41.79
-12	20	3/4	7/8" - 14 UNF	116.3	65.3	19.0	27.0	12G10FJX45S	£168.50
-12	20	3/4	1.1/16" - 12 UN	129.2	78.2	21.0	32.0	12G12FJX45S	£46.70
-12	20	3/4	1.5/16" - 12 UN	133.1	82.1	24.0	41.0	12G16FJX45S	£106.91
-16	25	1	1.5/16" - 12 UN	144.3	87.5	24.0	41.0	16G16FJX45S	£68.24
-20	32	1.1/4	1.5/8" - 12 UN	169.0	110.0	35.0	50.8	20G20FJX45	£180.03
-24	40	1.1/2	1.7/8" - 12 UN	233.0	159.5	50.0	60.0	24GSP24FJX45-050	£190.78
-32	50	2	2.1/2" - 12 UN	276.0	183.3	45.0	75.0	32GSP32FJX45	£232.88

Unless otherwise stated the coupling meets the pressure rating requirements of the respective international standard.

MegaCrimp®

JIC 37° FJX90S

Female JIC swivel. 37° inverted cone. 90° swept elbow. Short drop (-4 to -16 drop dimensions meet ISO 12151-5).

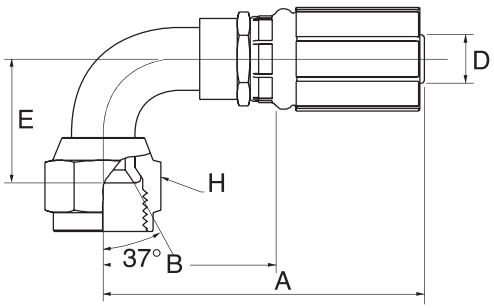

D				A	B	E	H	REF.	
-size	DN	"		mm	mm	mm	mm	G	
-4	6	1/4	7/16"- 20 UNF	63.1	37.1	21.0	14.0	4G4FJX90S	£21.35
-4	6	1/4	1/2"- 20 UNF	62.2	36.2	23.0	17.0	4G5FJX90-023	£28.90
-4	6	1/4	9/16"- 18 UNF	70.5	44.4	23.0	19.0	4G6FJX90S	£22.09
-5	8	5/16	9/16"- 18 UNF	75.2	47.2	23.0	19.0	5G6FJX90S	£95.80
-6	10	3/8	7/16"- 20 UNF	66.1	38.2	21.0	14.0	6G4FJX90S	£23.87
-6	10	3/8	9/16"- 18 UNF	74.2	46.3	23.0	19.0	6G6FJX90S	£20.67
-6	10	3/8	3/4"- 16 UNF	82.6	54.7	29.0	24.0	6G8FJX90S	£25.80
-8	12	1/2	9/16"- 18 UNF	77.3	39.9	41.0	24.0	8G6FJX90S	£26.54
-8	12	1/2	3/4"- 16 UNF	81.0	43.5	29.0	24.0	8G8FJX90S	£24.46
-8	12	1/2	7/8"- 14 UNF	93.3	55.8	32.0	27.0	8G10FJX90S	£33.60
-8	12	1/2	1.1/16"- 12 UN	107.5	70.0	48.0	32.0	8G12FJX90S	£82.91
-10	16	5/8	7/8"- 14 UNF	89.0	51.5	36.0	27.0	10G10FJX90-036	£33.96
-10	16	5/8	1.1/16"- 12 UN	106.1	68.6	48.0	32.0	10G12FJX90S	£41.76
-12	20	3/4	1.1/16"- 12 UN	122.4	71.4	48.0	32.0	12G12FJX90S	£44.05
-12	20	3/4	1.3/16"- 12 UN	124.0	73.0	54.0	36.0	12G14FJX90-054	£64.51
-12	20	3/4	1.5/16"- 12 UN	132.7	81.7	56.0	41.0	12G16FJX90S	£124.38
-16	25	1	1.5/16"- 12 UN	145.6	88.8	56.0	41.0	16G16FJX90S	£65.91
-16	25	1	1.5/8"- 12 UN	167.0	110.2	75.0	50.8	16G20FJX90S	£127.01

Unless otherwise stated the coupling meets the pressure rating requirements of the respective international standard.

JIC 37° FJX90M

Female JIC swivel. 37° inverted cone. 90° swept elbow. Medium drop (-4 to -20 drop dimensions meet ISO 12151-5).

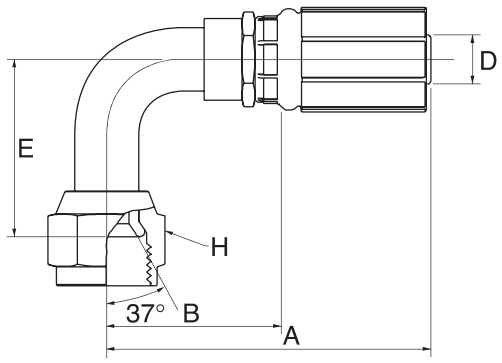

D				A	B	E	H	REF.	
-size	DN	"		mm	mm	mm	mm	G	
-4	6	1/4	7/16 - 20 UNF	63.2	37.1	32.0	14.0	4G4FJX90M	£22.07
-4	6	1/4	1/2" - 20 UNF	57.2	31.2	32.0	17.0	4G5FJX90M	£29.85
-4	6	1/4	9/16" - 18 UNF	64.9	38.9	38.0	19.0	4G6FJX90M	£28.03
-5	8	5/16	1/2" - 20 UNF	56.0	28.0	28.7	15.9	5G5FJX90M	£38.97
-5	8	5/16	9/16" - 18 UNF	76.0	48.0	38.0	19.0	5G6FJX90M	£25.91
-6	10	3/8	9/16" - 18 UNF	74.2	46.3	38.0	19.0	6G6FJX90M	£21.33
-6	10	3/8	3/4" - 16 UNF	84.1	56.2	41.0	24.0	6G8FJX90M	£26.48
-6	10	3/8	7/8" - 14 UNF	82.5	54.6	47.0	27.0	6G10FJX90M	£101.93
-8	12	1/2	3/4" - 16 UNF	77.3	39.9	41.0	24.0	8G8FJX90M	£25.27
-8	12	1/2	7/8" - 14 UNF	93.3	55.8	47.0	27.0	8G10FJX90M	£34.66
-10	16	5/8	7/8" - 14 UNF	93.4	55.9	47.0	27.0	10G10FJX90M	£35.00
-10	16	5/8	1.1/16" - 12 UN	101.9	64.4	58.0	32.0	10G12FJX90M	£43.01
-12	20	3/4	7/8" - 14 UNF	114.1	63.1	47.0	27.0	12G10FJX90M	£22.83
-12	20	3/4	1.1/16" - 12 UN	122.4	71.4	58.0	32.0	12G12FJX90M	£45.45
-16	25	1	1.5/16" - 12 UN	120.0	63.2	66.5	38.1	16G16FJX90M	£68.01
-20	32	1.1/4	1.5/8" - 12 UN	138.0	79.0	88.9	50.8	20G20FJX90M	£115.52
-24	40	1.1/2	1.7/8" - 12 UN	212.0	138.4	89.0	60.0	24GSP24FJX90-089	£190.78
-32	50	2	2.1/2" - 12 UN	272.0	179.7	140.0	75.0	32GSP32FJX90	£232.88

Unless otherwise stated the coupling meets the pressure rating requirements of the respective international standard.

MegaCrimp®

JIC 37° FJX90L

Female JIC swivel. 37° inverted cone. 90° swept elbow. Long drop (-4 to -20 drop dimensions meet ISO 12151-5).

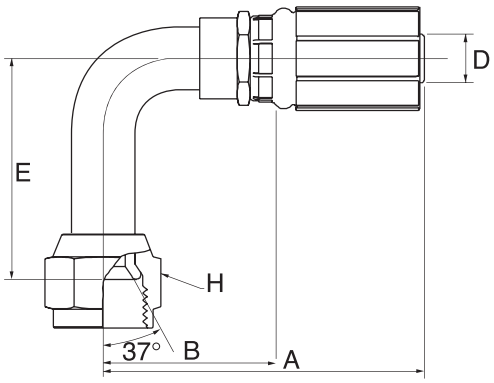

D				A	B	E	H	REF.	
-size	DN	"		mm	mm	mm	mm	G	
-4	6	1/4	7/16" - 20 UNF	63.1	37.1	46.0	14.0	4G4FJX90L	£29.66
-4	6	1/4	1/2" - 20 UNF	57.2	31.2	46.0	17.0	4G5FJX90L	£31.50
-4	6	1/4	9/16" - 18 UNF	69.3	43.2	54.0	19.0	4G6FJX90L	£33.14
-6	10	3/8	7/16" - 20 UNF	60.2	32.3	46.0	14.0	6G4FJX90L	£33.86
-6	10	3/8	9/16" - 18 UNF	74.2	46.3	54.0	19.0	6G6FJX90L	£24.55
-6	10	3/8	3/4" - 16 UNF	84.5	56.6	64.0	24.0	6G8FJX90L	£46.70
-8	12	1/2	3/4" - 16 UNF	77.3	39.9	64.0	24.0	8G8FJX90L	£34.03
-8	12	1/2	7/8" - 14 UNF	93.3	55.8	70.0	27.0	8G10FJX90L	£39.90
-10	16	5/8	7/8" - 14 UNF	85.9	48.4	70.0	27.0	10G10FJX90L	£61.82
-10	16	5/8	1.1/16" - 12 UN	116.5	79.0	96.0	32.0	10G12FJX90L	£90.08
-12	20	3/4	1.1/16" - 12 UN	122.4	71.4	96.0	32.0	12G12FJX90L	£52.28
-12	20	3/4	1.3/16" - 12 UN	107.4	56.4	100.0	36.0	12G14FJX90-100	£81.73
-16	25	1	1.5/16" - 12 UN	114.9	58.1	110.0	38.1	16G16FJX90L	£78.19
-20	32	1.1/4	1.5/8" - 12 UN	158.0	99.0	129.0	50.8	20G20FJX90L	£135.40

Unless otherwise stated the coupling meets the pressure rating requirements of the respective international standard.

MegaCrimp®

JIC 37° MJ

Male JIC parallel. 37° cone.

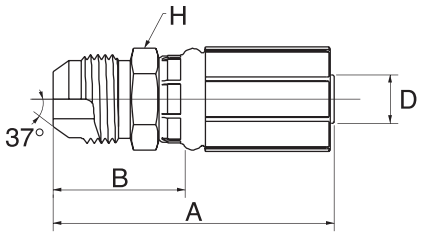

D				A	B	H	REF.	
-size	DN	"		mm	mm	mm	G	
-4	6	1/4	7/16" - 20 UNF	55.5	29.5	14.0	4G4MJ	£12.47
-4	6	1/4	1/2" - 20 UNF	55.5	29.5	14.0	4G5MJ	£15.82
-4	6	1/4	9/16" - 18 UNF	56.5	30.5	17.0	4G6MJ	£15.31
-5	8	5/16	1/2" - 20 UNF	57.5	29.5	17.0	5G5MJ	£17.74
-5	8	5/16	9/16" - 18 UNF	57.5	29.5	17.0	5G6MJ	£15.58
-6	10	3/8	9/16" - 18 UNF	58.5	30.6	17.0	6G6MJ	£12.83
-6	10	3/8	3/4" - 16 UNF	63.0	35.1	19.0	6G8MJ	£15.22
-6	10	3/8	7/8" - 14 UNF	67.0	39.1	24.0	6G10MJ	£23.64
-8	12	1/2	3/4" - 16 UNF	71.5	34.0	22.0	8G8MJ	£16.54
-8	12	1/2	7/8" - 14 UNF	74.0	36.5	24.0	8G10MJ	£18.83
-8	12	1/2	1.1/16" - 12 UN	81.0	43.5	27.0	8G12MJ	£33.24
-10	16	5/8	3/4" - 16 UNF	74.5	37.0	24.0	10G8MJ	£63.54
-10	16	5/8	7/8" - 14 UNF	77.0	39.5	24.0	10G10MJ	£25.76
-10	16	5/8	1.1/16" - 12 UN	81.0	43.5	27.0	10G12MJ	£31.31
-12	20	3/4	1.1/16" - 12 UN	94.5	43.5	27.0	12G12MJ	£28.85
-12	20	3/4	1.3/16" - 12 UN	95.5	44.5	32.0	12G14MJ	£48.89
-12	20	3/4	1.5/16" - 12 UN	96.0	45.0	36.0	12G16MJ	£41.38
-16	25	1	1.5/16" - 12 UN	104.5	47.7	36.0	16G16MJ	£42.06
-16	25	1	1.5/8" - 12 UN	109.0	52.2	44.5	16G20MJ	£116.30
-20	32	1.1/4	1.5/8" - 12 UN	112.5	53.5	44.5	20G20MJ	£145.73
-24	40	1.1/2	1.7/8" - 12 UN	130.0	56.4	50.0	24GSP24MJ	£126.35
-32	50	2	2.1/2" - 12 UN	161.1	69.1	65.0	32GSP32MJ	£170.96

JIS FJISX

Female Japanese swivel. 30° inverted cone. BSP thread.

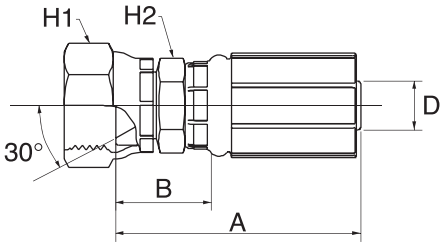

D				A	B	H1	H2	REF.	
-size	DN	"		mm	mm	mm	mm	G	
-4	6	1/4	G 1/4" - 19 BSP	47.0	21.0	19.1	19.1	4G4FJISX	£27.56
-6	10	3/8	G 3/8" - 19 BSP	52.0	24.1	22.0	17.0	6G6FJISX	£28.79
-8	12	1/2	G 1/2" - 14 BSP	67.9	30.4	27.0	22.0	8G8FJISX	£34.94
-12	20	3/4	G 3/4" - 14 BSP	81.3	30.3	36.0	30.0	12G12FJISX	£57.16
-16	25	1	G 1" - 11 BSP	94.0	37.2	41.0	41.0	16G16FJISX	£77.00

Unless otherwise stated the coupling meets the pressure rating requirements of the respective international standard.

MegaCrimp®

JIS FKX

Female Japanese swivel. 30° inverted cone. Metric thread.

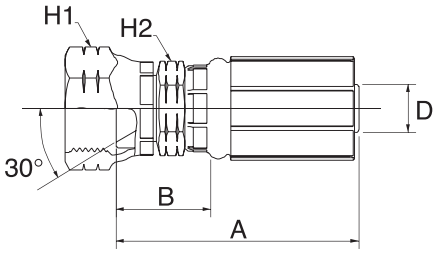

D				A	B	H1	H2	REF.	
-size	DN	"		mm	mm	mm	mm	G	
-4	6	1/4	M14 x 1.5	46.5	20.5	19.1	14.3	4G4FKX	£28.64
-6	10	3/8	M18 x 1.5	52.0	24.1	22.2	17.5	6G6FKX	£28.79
-8	12	1/2	M22 x 1.5	61.5	24.0	27.0	22.0	8G8FKX	£41.89
-10	16	5/8	M24 x 1.5	63.5	26.0	32.0	24.0	10G10FKX	£41.89
-12	20	3/4	M30 x 1.5	82.3	31.3	36.0	30.0	12G12FKX	£48.44
-16	25	1	M33 x 1.5	92.5	35.7	41.3	34.9	16G16FKX	£78.72
-20	32	1.1/4	M36 x1.5	105.0	46.0	50.8	44.5	20G20FKX	£218.78

SAE FFORX

Female SAE flat face 'O' ring swivel.

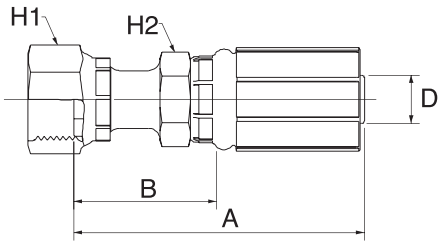

D				A	B	H1	H2	REF.	
-size	DN	"		mm	mm	mm	mm	G	
-4	6	1/4	9/16" - 18 UNF	52.7	26.7	17.0	15.0	4G4FFORX	£16.13
-4	6	1/4	11/16" - 16 UN	51.1	25.1	22.0	15.0	4G6FFORX	£23.34
-4	6	1/4	13/16" - 16 UN	50.5	24.5	24.0	15.0	4G8FFORX	£52.02
-5	8	5/16	11/16" - 16 UN	61.5	33.5	22.0	17.0	5G6FFORX	£24.00
-6	10	3/8	9/16" - 18 UNF	78.3	50.3	17.0	17.0	6G4FFORX	£39.47
-6	10	3/8	11/16" - 16 UN	57.7	28.9	22.0	18.0	6G6FFORX	£19.72
-6	10	3/8	13/16" - 16 UN	57.4	28.6	24.0	18.0	6G8FFORX	£22.30
-6	10	3/8	13/16" - 16 UN	54.7	25.9	30.0	18.0	6G10FFORX	£50.78
-8	12	1/2	11/16" - 16 UN	95.9	58.4	22.0	22.0	8G6FFORX	£40.22
-8	12	1/2	13/16" - 16 UN	66.5	31.3	24.0	22.0	8G8FFORX	£23.24
-8	12	1/2	1" - 14 UNS	70.0	34.8	30.0	22.0	8G10FFORX	£40.58
-8	12	1/2	1.3/16" - 12 UN	71.5	36.3	36.0	22.0	8G12FFORX	£67.69
-10	12	5/8	13/16" - 16 UN	97.2	59.7	24.0	24.0	10G8FFORX	£68.86
-10	16	5/8	1" - 14 UNS	76.0	38.5	30.0	24.0	10G10FFORX	£29.53
-10	16	5/8	1.3/16" - 12 UN	77.0	39.5	36.0	24.0	10G12FFORX	£68.86
-12	20	3/4	1" - 14 UNS	95.1	44.1	30.0	30.0	12G10FFORX	£84.95
-12	20	3/4	1.3/16" - 12 UN	92.8	41.8	36.0	30.0	12G12FFORX	£43.61
-12	20	3/4	1.7/16" - 12 UN	88.3	37.3	41.0	30.0	12G16FFORX	£54.29
-16	25	1	1.7/16" - 12 UN	110.0	53.2	41.3	41.0	16G16FFORX	£64.19
-16	25	1	1.11/16" - 12 UN	104.5	47.7	47.6	41.0	16G20FFORX	£170.00
-20	32	1.1/4	1.11/16" - 12 UN	117.5	58.5	47.6	50.0	20G20FFORX	£180.03
-24	40	1.1/2	2" - 12 UN	137.0	63.4	60.0	55.0	24GSP24FFORX	

Unless otherwise stated the coupling meets the pressure rating requirements of the respective international standard.

MegaCrimp®

SAE FFORX45S

Female SAE flat face 'O' ring swivel. 45° swept elbow.
Short drop (-4 to -20 drop dimensions meet ISO 12151-5).

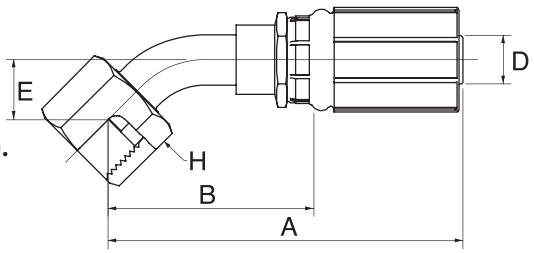

D				A	B	E	H	REF.	
-size	DN	"		mm	mm	mm	mm	G	
-4	6	1/4	9/16" - 18 UNF	65.2	39.2	10.0	17.0	4G4FFORX45S	£23.72
-4	6	1/4	11/16" - 16 UN	68.5	42.5	11.0	22.0	4G6FFORX45S	£28.34
-5	8	5/16	11/16" - 16 UN	69.4	41.4	11.0	22.0	5G6FFORX45S	£23.34
-6	10	3/8	9/16" - 18 UNF	66.1	38.1	10.0	17.0	6G4FFORX45S	£61.95
-6	10	3/8	11/16" - 16 UN	69.8	41.9	11.0	22.0	6G6FFORX45S	£26.22
-6	10	3/8	13/16" - 16 UN	85.2	57.3	15.0	24.0	6G8FFORX45S	£32.63
-8	12	1/2	11/16" - 16 UN	90.7	53.2	11.0	22.0	8G6FFORX45S	£61.95
-8	12	1/2	13/16" - 16 UN	89.0	51.6	15.0	24.0	8G8FFORX45S	£32.94
-8	12	1/2	1" - 14 UNS	101.0	63.5	16.0	30.0	8G10FFORX45S	£49.01
-8	12	1/2	1.3/16" - 12 UN	110.3	72.8	21.0	36.0	8G12FFORX45S	£93.83
-10	16	5/8	13/16" - 16 UN	96.8	59.3	15.0	24.0	10G8FFORX45S	£69.37
-10	16	5/8	1" - 14 UNS	100.5	63.0	16.0	30.0	10G10FFORX45S	£56.20
-10	16	5/8	1.3/16" - 12 UN	105.9	68.4	21.0	36.0	10G12FFORX45S	£60.06
-12	20	3/4	1" - 14 UNS	113.0	62.0	16.0	30.0	12G10FFORX45S	£101.12
-12	20	3/4	1.3/16" - 12 UN	118.4	67.4	21.0	36.0	12G12FFORX45S	£54.53
-12	20	3/4	1.7/16" - 12 UN	122.0	71.0	24.0	41.0	12G16FFORX45S	£97.48
-16	25	1	1.3/16" - 12 UN	132.5	75.7	21.0	36.0	16G12FFORX45S	£83.13
-16	25	1	1.7/16" - 12 UN	146.9	90.1	24.0	41.0	16G16FFORX45S	£83.13
-20	32	1.1/4	1.11/16" - 12 UN	158.0	99.0	25.0	50.0	20G20FFORX45S	£182.68

Unless otherwise stated the coupling meets the pressure rating requirements of the respective international standard.

MegaCrimp®

SAE FFORX90S

Female SAE flat face 'O' ring swivel. 90° swept elbow.
Short drop (-4 to -20 drop dimensions meet ISO 12151-1).

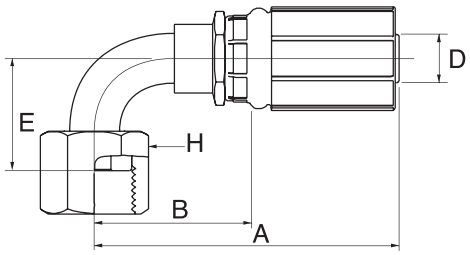

D				A	B	E	H	REF.	
-size	DN	"		mm	mm	mm	mm	G	
-4	6	1/4	9/16" - 18 UNF	60.2	34.4	21.0	17.0	4G4FFORX90S	£31.59
-4	6	1/4	11/16" - 16 UN	63.4	37.4	23.0	22.0	4G6FFORX90S	£27.54
-5	8	5/16	11/16" - 16 UN	72.0	44.0	23.0	22.0	5G6FFORX90S	£47.64
-6	10	3/8	9/16" - 18 UNF	61.4	33.6	21.0	17.0	6G4FFORX90S	£42.59
-6	10	3/8	11/16" - 16 UN	72.5	44.6	23.0	22.0	6G6FFORX90S	£26.39
-6	10	3/8	13/16" - 16 UN	73.0	45.1	29.0	24.0	6G8FFORX90S	£32.63
-8	12	1/2	11/16" - 16 UN	83.5	46.0	23.0	22.0	8G6FFORX90S	£87.64
-8	12	1/2	13/16" - 16 UN	83.9	46.5	29.0	24.0	8G8FFORX90S	£32.73
-8	12	1/2	1" - 14 UNS	92.9	55.4	32.0	30.0	8G10FFORX90S	£37.12
-8	12	1/2	1.3/16" - 12 UN	102.9	65.4	48.0	36.0	8G12FFORX90S	£93.83
-10	16	5/8	13/16" - 16 UN	92.4	54.9	29.0	24.0	10G8FFORX90S	£69.37
-10	16	5/8	1" - 14 UNS	92.5	55.0	32.0	30.0	10G10FFORX90S	£62.46
-10	16	5/8	1.3/16" - 12 UN	96.3	58.8	48.0	36.0	10G12FFORX90S	£72.00
-12	20	3/4	1" - 14 UNS	104.0	53.0	32.0	30.0	12G10FFORX90S	£165.95
-12	20	3/4	1.3/16" - 12 UN	109.0	58.0	48.0	36.0	12G12FFORX90S	£53.85
-12	20	3/4	1.7/16" - 12 UN	128.5	77.5	56.0	41.0	12G16FFORX90S	£125.33
-16	25	1	1.3/16" - 12 UN	129.4	72.6	48.0	36.0	16G12FFORX90S	£211.68
-16	25	1	1.7/16" - 12 UN	129.9	73.1	56.0	41.0	16G16FFORX90S	£84.78
-20	32	1.1/4	1.11/16" - 12 UN	150.0	91.0	64.0	50.0	20G20FFORX90S	£145.81

Unless otherwise stated the coupling meets the pressure rating requirements of the respective international standard.

MegaCrimp®

SAE FFORX90M

Female SAE flat face 'O' ring swivel. 90° swept elbow.
Medium drop (-4 to -20 drop dimensions meet ISO 12151-1).

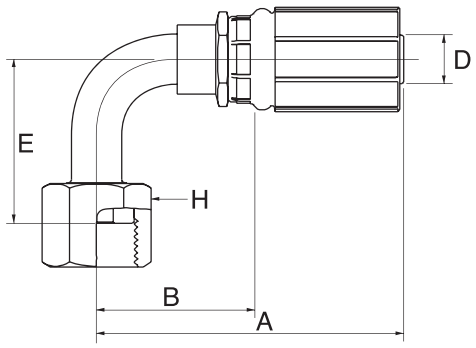

D				A	B	E	H	REF.	
-size	DN	"		mm	mm	mm	mm	G	
-4	6	1/4	9/16" - 18 UNF	56.2	30.2	32.0	17.0	4G4FFORX90M	£20.95
-4	6	1/4	11/16" - 16 UN	63.4	37.4	38.0	22.0	4G6FFORX90M	£28.34
-6	10	3/8	11/16" - 16 UN	63.6	35.7	38.0	22.0	6G6FFORX90M	£26.25
-6	10	3/8	13/16" - 16 UN	68.5	40.6	41.0	24.0	6G8FFORX90M	£32.63
-8	12	1/2	13/16" - 16 UN	83.9	46.5	41.0	24.0	8G8FFORX90M	£25.46
-8	12	1/2	1" - 14 UNS	93.2	55.7	47.0	30.0	8G10FFORX90M	£36.72
-10	16	5/8	1" - 14 UNS	92.8	55.3	47.0	30.0	10G10FFORX90M	£55.61
-12	20	3/4	1.3/16" - 12 UN	109.0	58.0	58.0	36.0	12G12FFORX90M	£55.52
-16	25	1	1.7/16" - 12 UN	129.9	73.1	71.0	41.0	16G16FFORX90M	£87.70
-16	25	1	1.11/16" - 12 UN	156.0	99.2	78.0	50.0	16G20FFORX90M	£198.20
-20	32	1.1/4	1.11/16" - 12 UN	140.0	81.0	78.0	50.0	20G20FFORX90M	£195.72

Unless otherwise stated the coupling meets the pressure rating requirements of the respective international standard.

MegaCrimp®

SAE FFORX90L

Female SAE flat face 'O' ring swivel. 90° swept elbow.
Long drop (-4 to -20 drop dimensions meet ISO 12151-1).

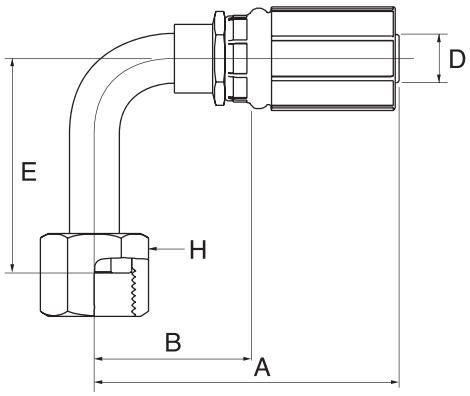

D				A	B	E	H	REF.	
-size	DN	"		mm	mm	mm	mm	G	
-4	6	1/4	9/16" - 18 UNF	56.2	30.2	46.0	17.0	4G4FFORX90L	£39.03
-4	6	1/4	11/16" - 16 UN	61.6	35.6	54.0	22.0	4G6FFORX90L	£36.15
-4	6	1/4	13/16" - 16 UN	67.1	41.1	64.0	24.0	4G8FFORX90L	£92.92
-6	10	3/8	11/16" - 16 UN	69.3	41.4	54.0	22.0	6G6FFORX90L	£30.15
-6	10	3/8	13/16" - 16 UN	69.0	41.1	64.0	24.0	6G8FFORX90L	£37.52
-8	12	1/2	13/16" - 16 UN	83.9	46.5	64.0	24.0	8G8FFORX90L	£47.87
-8	12	1/2	1" - 14 UNS	90.6	53.1	70.0	30.0	8G10FFORX90L	£56.12
-10	16	5/8	13/16" - 16 UN	92.4	54.9	64.0	24.0	10G8FFORX90L	£69.37
-10	16	5/8	1" - 14 UNS	90.2	52.7	70.0	30.0	10G10FFORX90L	£73.31
-12	20	3/4	1.3/16" - 12 UN	118.2	67.2	96.0	36.0	12G12FFORX90L	£92.45
-16	25	1	1.7/16" - 12 UN	129.9	73.1	114.0	41.0	16G16FFORX90L	£148.42
-20	32	1.1/4	1.11/16" - 12 UN	140.0	81.0	129.0	50.0	20G20FFORX90L	£198.20

Unless otherwise stated the coupling meets the pressure rating requirements of the respective international standard.

MegaCrimp®

SAE MFFOR

Male SAE flat face 'O' ring.

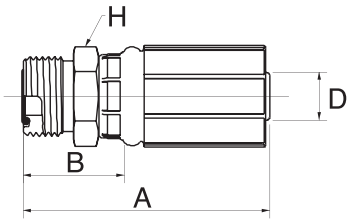

D				A	B	H	REF.	
-size	DN	"		mm	mm	mm	G	
-4	6	1/4	9/16" - 18 UNF	52.5	26.5	17.0	4G4MFFOR	£41.68
-4	6	1/4	11/16" - 16 UN	54.0	28.0	19.0	4G6MFFOR	£53.70
-5	8	5/16	11/16" - 16 UN	56.0	28.0	19.0	5G6MFFOR	£166.02
-6	10	3/8	11/16" - 16 UN	56.0	28.1	19.0	6G6MFFOR	£31.50
-6	10	3/8	13/16" - 16 UN	59.0	31.1	22.0	6G8MFFOR	£57.28
-6	10	3/8	1" - 14 UNS	64.0	36.1	27.0	6G10MFFOR	£74.54
-8	12	1/2	13/16" - 16 UN	68.2	30.7	22.0	8G8MFFOR	£38.22
-8	12	1/2	1" - 14 UNS	73.0	35.5	27.0	8G10MFFOR	£50.82
-10	16	5/8	1" - 14 UNS	73.0	35.5	27.0	10G10MFFOR	£47.93
-10	16	5/8	1.3/16" - 12 UN	77.0	39.5	32.0	10G12MFFOR	£62.35
-12	20	3/4	1.3/16" - 12 UN	90.0	39.0	32.0	12G12MFFOR	£50.39
-12	20	3/4	1.7/16" - 12 UN	95.0	44.0	41.0	12G16MFFOR	£73.95
-16	25	1	1.7/16" - 12 UN	102.0	45.2	41.0	16G16MFFOR	£53.08
-16	25	1	1.11/16" - 12 UN	105.0	48.2	46.0	16G20MFFOR	
-20	32	1.1/4	1.11/16" - 12 UN	109.0	50.0	46.0	20G20MFFOR	£112.04

SAE 45° FSX

Female SAE swivel. 45° inverted cone.

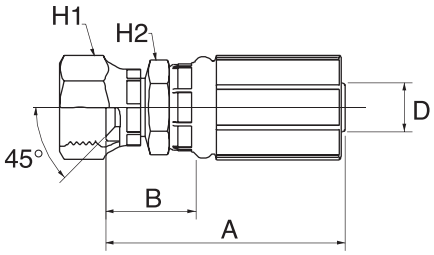

D				A	B	H1	H2	REF.	
-size	DN	"		mm	mm	mm	mm	G	
-4	6	1/4	7/16" - 20 UNF	48.0	22.0	14.3	12.7	4G4FSX	£36.87
-4	6	1/4	1/2" - 20 UNF	46.5	20.5	17.5	12.7	4G5FSX	£42.00
-4	6	1/4	5/8" - 18 UNF	48.5	22.5	19.1	15.9	4G6FSX	£21.22
-5	8	5/16	5/8" - 18 UNF	52.0	24.0	19.1	15.9	5G6FSX	£99.03
-6	10	3/8	5/8" - 18 UNF	52.0	24.1	19.1	15.9	6G6FSX	£20.46
-6	10	3/8	3/4" - 16 UNF	51.5	23.5	22.2	17.5	6G8FSX	£20.08
-8	12	1/2	3/4" - 16 UNF	60.0	22.5	22.2	20.6	8G8FSX	£26.46
-8	12	1/2	7/8" - 14 UNF	63.0	25.5	27.0	20.6	8G10FSX	£23.74
-12	20	3/4	1.1/16" - 14 UNS	78.5	27.5	31.8	27.0	12G12FSX	£45.71

Unless otherwise stated the coupling meets the pressure rating requirements of the respective international standard.

SAE 24° MFA

Male SAE parallel. 24° inverted cone.

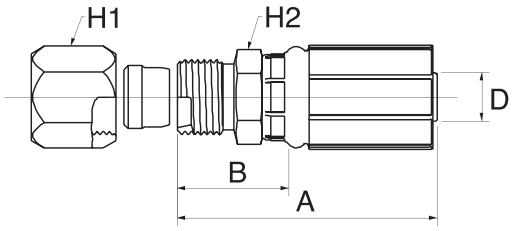

D				A	B	H1	H2	REF.	
-size	DN	"		mm	mm	mm	mm	G	
-4	6	1/4	7/16" - 20 UNF	53.0	27.0	14.3	12.7	4G4MFA	£32.65
-4	6	1/4	1/2" - 20 UNF	50.0	24.0	15.9	12.7	4G5MFA	£84.93
-6	10	3/8	7/16" - 20 UNF	55.0	27.1	14.3	15.9	6G4MFA	£46.39
-6	10	3/8	1/2" - 20 UNF	55.0	27.1	15.9	15.9	6G5MFA	£49.74
-6	10	3/8	9/16" - 18 UNF	56.0	28.1	17.5	15.9	6G6MFA	£30.10
-6	10	3/8	3/4" - 16 UNF	61.0	33.1	22.2	19.1	6G8MFA	£51.35
-8	12	1/2	3/4" - 16 UNF	70.5	33.0	22.2	20.6	8G8MFA	£39.30
-8	12	1/2	7/8" - 14 UNF	72.0	34.5	25.4	22.2	8G10MFA	£61.35
-12	20	3/4	1.1/16" - 12 UN	90.0	39.0	31.8	27.0	12G12MFA	£112.70
-16	25	1	1.5/16" - 12 UN	100.0	43.2	38.1	34.9	16G16MFA	£201.59

SAE FL

SAE 'O' ring flange. Code 61.

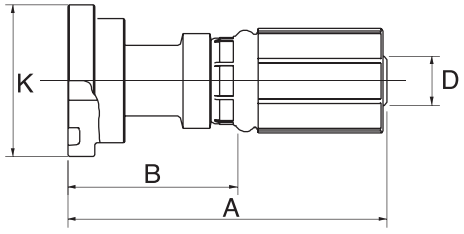

D				A	B	K	KIT	REF.	
-size	DN	"		mm	mm	mm		G	
-8	12	1/2	1/2"	80.0	42.5	30.2	8 PA-FL	8G8FL	£39.35
-8	12	1/2	3/4"	80.0	42.5	38.1	12 PA-FL	8G12FL	£91.20
-10	16	5/8	3/4"	98.0	60.5	38.1	12 PA-FL	10G12FL	£100.64
-12	20	3/4	3/4"	98.0	47.0	38.1	12 PA-FL	12G12FL	£44.48
-12	20	3/4	1"	88.8	37.8	44.5	16 PA-FL	12G16FL	£63.05
-16	25	1	3/4"	128.0	71.2	38.1	12 PA-FL	16G12FL	£62.60
-16	25	1	1"	105.0	48.2	44.5	16 PA-FL	16G16FL	£59.06
-16	25	1	1.1/4"	105.0	48.2	50.8	20 PA-FL	16G20FL	£101.72
-16	25	1	1.1/2"	96.0	39.2	60.3	24 PA-FL	16G24FL	£108.18
-20	32	1.1/4	1.1/4"	112.5	53.5	50.8	20 PA-FL	20G20FL	£157.07
-20	32	1.1/4	1.1/2"	117.5	58.5	60.3	24 PA-FL	20G24FL	£178.78
-24	40	1.1/2	1.1/2"	152.9	79.3	60.3	24PA-FL	24GSP24FL	£84.23
-24	40	1.1/2	2"	152.9	79.3	71.4	32PA-FL	24GSP32FL	£148.65
-32	50	2	2"	159.3	67.3	71.4	32PA-FL	32GSP32FL	£58.23

Details on flange kits see page 218.

Unless otherwise stated the coupling meets the pressure rating requirements of the respective international standard.

MegaCrimp®

SAE FL22M

SAE 'O' ring flange. Code 61. 22° swept elbow.
Medium drop (-12 to -20 drop dimensions meet ISO 12151-3).

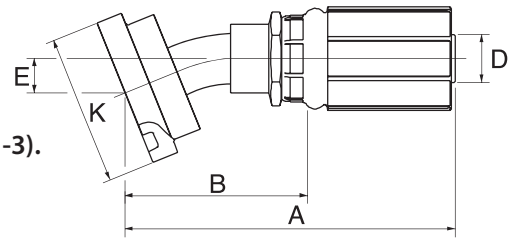

D				A	B	E	K	KIT	REF.	
-size	DN	"		mm	mm	mm	mm		G	
-12	20	3/4	3/4"	121.0	70.0	11.0	38.1	12 PA-FL	12G12FL22M	£96.44
-16	25	1	1"	142.5	85.7	14.0	44.5	16 PA-FL	16G16FL22M	£115.35
-20	32	1.1/4	1.1/4"	152.5	93.5	15.0	50.8	20 PA-FL	20G20FL22M	£142.34

Details on flange kits see page 218.

SAE FL30M

SAE 'O' ring flange. Code 61. 30° swept elbow.
Medium drop (-16 drop dimension meets ISO 12151-3).

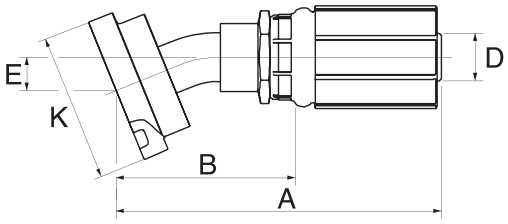

D				A	B	E	K	KIT	REF.	
-size	DN	"		mm	mm	mm	mm		G	
-16	25	1	1"	144.5	87.7	19.0	44.5	16 PA-FL	16G16FL30M	£110.92
-24	40	1.1/2	1.1/2"	209.0	135.2	25.0	60.4	24 PA-FL	24GSP24FL30S	£190.78

S: Short drop. / Details on flange kits see page 218.

Unless otherwise stated the coupling meets the pressure rating requirements of the respective international standard.

MegaCrimp®

SAE FL45

SAE 'O' ring flange. Code 61. 45° swept elbow. Short and medium drop dimensions for size -8 to -20 meet ISO 12151-3.

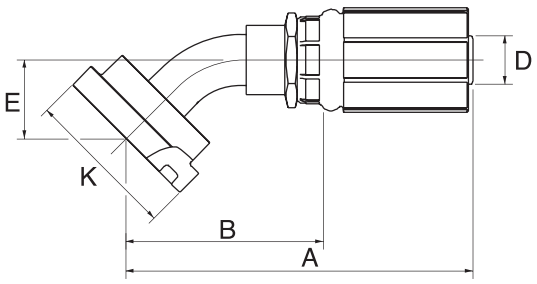

D				A	B	E	K	KIT	REF.	
-size	DN	"		mm	mm	mm	mm		G	
-8	12	1/2	1/2"	84.9	47.5	21.7	30.2	8 PA-FL	8G8FL45M	£52.11
-8	12	1/2	3/4"	104.8	67.3	26.0	38.1	12 PA-FL	8G12FL45M	£95.61
-12	20	3/4	3/4"	107.2	56.2	26.6	38.1	12 PA-FL	12G12FL45M	£59.47
-12	20	3/4	1"	124.5	73.5	28.0	44.5	16 PA-FL	12G16FL45S	£72.10
-16	25	1	3/4"	118.7	61.9	26.6	38.1	12 PA-FL	16G12FL45	£92.50
-16	25	1	1"	142.5	85.7	28.0	44.5	16 PA-FL	16G16FL45S	£87.09
-16	25	1	1.1/4"	149.0	92.2	32.0	50.8	20 PA-FL	16G20FL45S	£98.92
-20	32	1.1/4	1.1/4"	157.0	98.0	32.0	50.8	20 PA-FL	20G20FL45S	£157.20
-24	40	1.1/2	1.1/2"	202.0	128.6	38.0	60.4	24 PA-FL	24GSP24FL45S	£138.73
-24	40	1.1/2	1.1/2"	200.0	126.3	52.0	71.4	32 PA-FL	24GSP32FL45S	£200.68
-32	50	2	2"	261.0	168.6	56.0	71.4	32 PA-FL	32GSP32FL45-066	£170.96

Details on flange kits see page 218.

SAE FL60

SAE 'O' ring flange. Code 61. 60° swept elbow. Short and medium drop dimensions for size -12 to -24 meet ISO 12151-3.

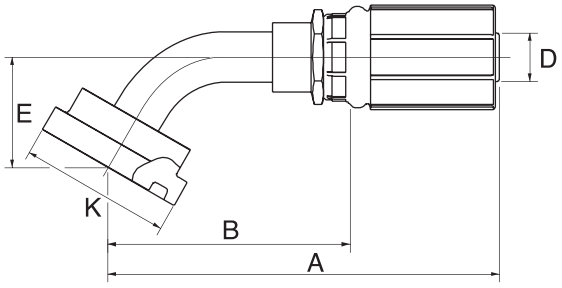

D				A	B	E	K	KIT	REF.	
-size	DN	"		mm	mm	mm	mm		G	
-12	20	3/4	3/4"	128.0	77.0	37.0	38.1	12 PA-FL	12G12FL60	£90.59
-12	20	3/4	1"	132.0	81.0	44.0	44.5	16 PA-FL	12G16FL60M	£72.29
-24	40	1.1/2	1.1/2"	231.0	157.5	53.0	60.4	24 PA-FL	24GSP24FL60S	£190.78

Details on flange kits see page 218.

Unless otherwise stated the coupling meets the pressure rating requirements of the respective international standard.

MegaCrimp®

SAE FL90

SAE 'O' ring flange. Code 61. 90° swept elbow. Short and medium drop dimensions for size -8 to -24 meet ISO 12151-3.

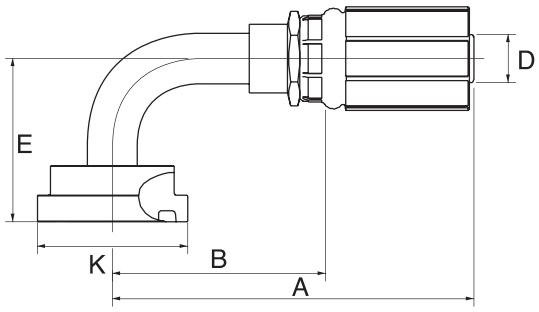

D				A	B	E	K	KIT	REF.	
-size	DN	"		mm	mm	mm	mm		G	
-8	12	1/2	1/2"	91.2	53.7	40.0	30.2	8 PA-FL	8G8FL90M	£40.43
-8	12	1/2	3/4"	91.5	54.0	58.0	38.1	12 PA-FL	8G12FL90M	£77.61
-10	16	5/8	3/4"	100.0	62.5	58.0	38.1	12 PA-FL	10G12FL90M	£109.43
-12	20	3/4	3/4"	97.3	46.3	54.4	38.1	12 PA-FL	12G12FL90M	£46.15
-12	20	3/4	1"	119.8	68.8	61.0	44.5	16 PA-FL	12G16FL90S	£63.05
-16	25	1	1"	139.3	82.5	61.0	44.5	16 PA-FL	16G16FL90S	£67.23
-16	25	1	1.1/4"	139.3	82.5	68.0	50.8	20 PA-FL	16G20FL90S	£91.39
-16	25	1	1.1/2"	118.2	61.4	61.6	60.3	24 PA-FL	16G24FL90	£127.84
-20	32	1.1/4	1"	122.1	63.1	61.8	44.5	16 PA-FL	20G16FL90S	£191.20
-20	32	1.1/4	1.1/4"	158.1	99.1	68.0	50.8	20 PA-FL	20G20FL90S	£157.20
-20	32	1.1/4	1.1/2"	158.1	99.1	81.0	60.3	24 PA-FL	20G24FL90S	£186.90
-24	40	1.1/2	1.1/2"	184.0	109.9	81.0	60.4	24 PA-FL	24GSP24FL90S	£138.73
-24	40	1.1/2	2"	175.0	101.9	80.0	71.4	32 PA-FL	24GSP32FL90-080	£200.68
-32	50	2	2"	222.0	130.1	114.0	71.4	32 PA-FL	32GSP32FL90-114	£170.96

Details on flange kits see page 218.

Unless otherwise stated the coupling meets the pressure rating requirements of the respective international standard.

MegaCrimp®

FLK

Komatsu type 'O' ring flange.

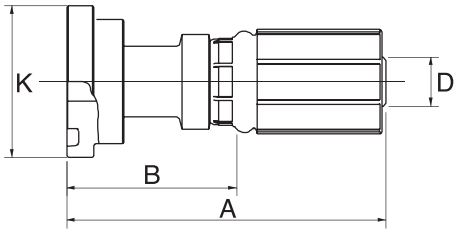

D				A	B	K	REF.	
-size	DN	"		mm	mm	mm	G	
-8	12	1/2	5/8"	80.0	42.5	34.2	8G10FLK	£144.71
-10	16	5/8	5/8"	119.0	81.5	34.2	10G10FLK	£149.46

FLK45

Komatsu type 'O' ring flange. 45° swept elbow.

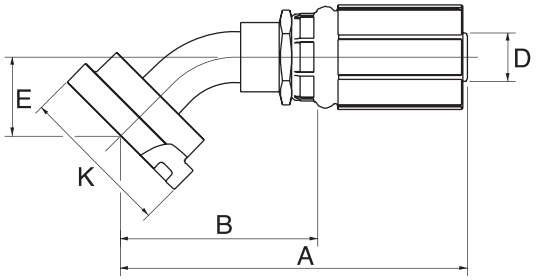

D				A	B	E	K	REF.	
-size	DN	"		mm	mm	mm	mm	G	
-10	16	5/8	5/8"	106.5	69.0	26.0	34.2	10G10FLK45	£89.55

FLK90

Komatsu type 'O' ring flange. 90° swept elbow.

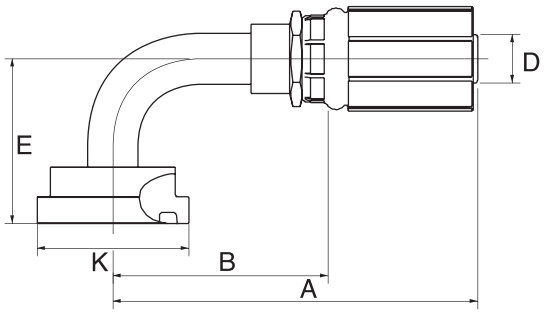

D				A	B	E	K	REF.	
-size	DN	"		mm	mm	mm	mm	G	
-10	16	5/8	5/8"	99.0	61.5	55.0	34.2	10G10FLK90	£95.72

Unless otherwise stated the coupling meets the pressure rating requirements of the respective international standard.

DIN 24° FDLORX

Female DIN 'O' ring swivel. 24° cone. Light series.

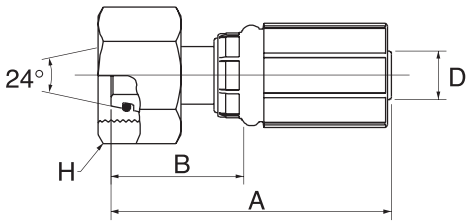

D				A	B	H	REF.	
-size	DN	"		mm	mm	mm	G	
-4	6	1/4	M12 x 1.5	51.8	28.8	14.0	4G6FDLORX	£21.14
-4	6	1/4	M14 x 1.5	55.7	29.7	17.0	4G8FDLORX	£11.66
-4	6	1/4	M16 x 1.5	55.3	29.3	19.0	4G10FDLORX	£13.55
-4	6	1/4	M18 x 1.5	55.7	29.7	22.0	4G12FDLORX	£18.78
-5	8	5/16	M14 x 1.5	52.0	28.4	17.0	5G8FDLORX	£24.72
-5	8	5/16	M16 x 1.5	53.9	29.7	19.0	5G10FDLORX	£27.86
-5	8	5/16	M18 x 1.5	58.5	30.0	22.0	5G12FDLORX	£16.96
-6	10	3/8	M16 x 1.5	57.1	29.2	19.0	6G10FDLORX	£32.39
-6	10	3/8	M18 x 1.5	57.8	29.9	22.0	6G12FDLORX	£12.80
-6	10	3/8	M20 x 1.5	60.4	32.5	24.0	6G14FDLORX	£18.40
-6	10	3/8	M22 x 1.5	56.7	28.8	27.0	6G15FDLORX	£27.35
-8	12	1/2	M18 x 1.5	70.2	32.7	22.0	8G12FDLORX	£29.38
-8	12	1/2	M22 x 1.5	67.0	29.5	27.0	8G15FDLORX	£18.17
-8	12	1/2	M26 x 1.5	67.9	30.4	32.0	8G18FDLORX	£44.12
-10	16	5/8	M26 x 1.5	67.8	30.3	32.0	10G18FDLORX	£24.59
-12	20	3/4	M26 x 1.5	83.8	32.8	32.0	12G18FDLORX	£70.19
-12	20	3/4	M30 x 2.0	85.8	34.8	36.0	12G22FDLORX	£31.86
-16	25	1	M36 x 2.0	81.6	36.7	41.0	16G28FDLORX	£56.75
-20	32	1.1/4	M45 x 2.0	90.4	44.1	50.0	20G35FDLORX	£161.16
-24	40	1.1/2	M52 x 2.0	135.7	62.0	60.0	24GSP42FDLORX	£138.73

Unless otherwise stated the coupling meets the pressure rating requirements of the respective international standard.

DIN 24° FDLORX45

**Female DIN 'O' ring swivel. 24° cone. Light series.
45° swept elbow. Drop dimensions meet ISO 12151-2.**

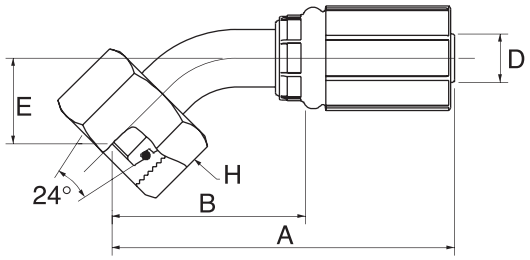

D				A	B	E	H	REF.	
-size	DN	"		mm	mm	mm	mm	G	
-4	6	1/4	M12 x 1.5	65.5	39.5	16.9	14.0	4G6FDLORX45	£40.75
-4	6	1/4	M14 x 1.5	62.6	36.5	16.2	19.0	4G8FDLORX45	£21.88
-4	6	1/4	M16 x 1.5	64.4	38.3	17.9	19.0	4G10FDLORX45	£28.32
-4	6	1/4	M18 x 1.5	66.7	40.7	18.3	22.0	4G12FDLORX45	£31.69
-5	8	5/16	M14 x 1.5	67.1	39.1	16.9	17.0	5G8FDLORX45	£54.04
-5	8	5/16	M16 x 1.5	63.4	39.3	17.1	19.0	5G10FDLORX45	£22.68
-5	8	5/16	M18 x 1.5	67.7	39.7	18.9	22.0	5G12FDLORX45	£33.75
-6	10	3/8	M16 x 1.5	68.5	40.5	18.6	19.0	6G10FDLORX45	£29.40
-6	10	3/8	M18 x 1.5	68.8	40.9	18.9	22.0	6G12FDLORX45	£22.32
-6	10	3/8	M22 x 1.5	72.3	44.4	22.5	27.0	6G15FDLORX45	£33.88
-8	12	1/2	M18 x 1.5	92.9	55.4	29.7	22.0	8G12FDLORX45	£57.79
-8	12	1/2	M22 x 1.5	84.6	47.1	20.2	27.0	8G15FDLORX45	£28.22
-8	12	1/2	M26 x 1.5	94.9	57.2	26.9	32.0	8G18FDLORX45	£84.29
-10	16	5/8	M26 x 1.5	93.5	56.0	24.8	32.0	10G18FDLORX45	£41.34
-12	20	3/4	M30 x 2.0	104.6	66.1	29.8	36.0	12G22FDLORX45	£74.26
-16	25	1	M36 x 2.0	135.4	78.8	30.9	41.0	16G28FDLORX45	£133.48
-20	32	1.1/4	M45 x 2.0	152.4	93.4	37.5	50.0	20G35FDLORX45	£207.99
-24	40	1.1/2	M52 x 2.0	208.9	135.2	44.0	60.0	24GSP42FDLORX45	£190.25

Unless otherwise stated the coupling meets the pressure rating requirements of the respective international standard.

MegaCrimp®

DIN 24° FDLORX90

**Female DIN 'O' ring swivel. 24° cone. Light series.
90° swept elbow. Drop dimensions meet ISO 12151-2.**

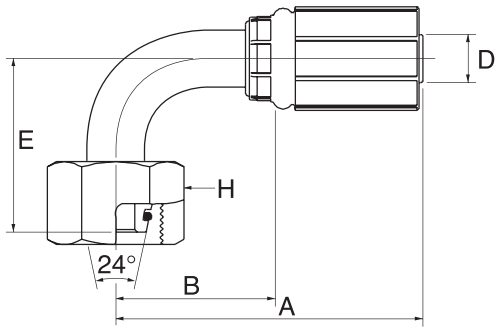

D				A	B	E	H	REF.	
-size	DN	"		mm	mm	mm	mm	G	
-4	6	1/4	M12 x 1.5	57.6	31.5	35.0	14.0	4G6FDLORX90	£34.32
-4	6	1/4	M14 x 1.5	57.5	31.5	35.0	17.0	4G8FDLORX90	£21.88
-4	6	1/4	M16 x 1.5	57.6	31.5	36.5	19.0	4G10FDLORX90	£25.19
-4	6	1/4	M18 x 1.5	59.6	33.5	37.0	22.0	4G12FDLORX90	£33.18
-5	8	5/16	M14 x 1.5	61.4	33.4	35.0	17.0	5G8FDLORX90	£36.53
-5	8	5/16	M16 x 1.5	62.5	34.4	36.5	19.0	5G10FDLORX90	£24.40
-5	8	5/16	M15 x 1.5	59.0	31.0	37.0	22.0	5G12FDLORX90	£30.55
-6	10	3/8	M16 x 1.5	60.1	32.2	36.5	19.0	6G10FDLORX90	£29.40
-6	10	3/8	M18 x 1.5	60.1	32.2	37.0	22.0	6G12FDLORX90	£23.93
-6	10	3/8	M22 x 1.5	60.1	32.2	42.0	27.0	6G15FDLORX90	£35.87
-8	12	1/2	M18 x 1.5	74.3	36.9	53.1	22.0	8G12FDLORX90	£55.88
-8	12	1/2	M22 x 1.5	77.9	40.4	42.0	27.0	8G15FDLORX90	£30.00
-8	12	1/2	M26 x 1.5	81.5	44.0	51.5	32.0	8G18FDLORX90	£85.99
-10	16	5/8	M26 x 1.5	85.1	47.6	51.5	32.0	10G18FDLORX90	£40.15
-12	20	3/4	M26 x 1.5	100.3	49.3	51.5	32.0	12G18FDLORX90	£140.26
-12	20	3/4	M30 x 2.0	107.3	56.3	62.0	36.0	12G22FDLORX90	£52.22
-16	25	1	M36 x 2.0	131.1	74.3	70.0	41.0	16G28FDLORX90	£105.83
-20	32	1.1/4	M45 x 2.0	141.8	82.8	80.0	50.0	20G35FDLORX90	£207.99
-24	40	1.1/2	M52 x 2.0	194.6	121.0	92.0	60.0	24GSP42FDLORX90	

Unless otherwise stated the coupling meets the pressure rating requirements of the respective international standard.

DIN 24° MDL

Male DIN parallel. 24° inverted cone. Light series.

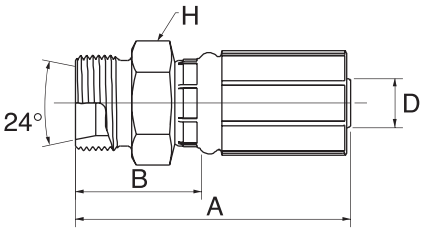

D				A	B	H	REF.	
-size	DN	"		mm	mm	mm	G	
-4	6	1/4	M12 x 1.5	45.8	19.8	14.0	4G6MDL	£14.63
-4	6	1/4	M14 x 1.5	46.8	20.8	17.0	4G8MDL	£16.45
-4	6	1/4	M16 x 1.5	47.8	21.8	17.0	4G10MDL	£24.08
-4	6	1/4	M18 x 1.5	50.0	24.0	19.0	4G12MDL	£14.29
-5	8	5/16	M14 x 1.5	48.8	20.8	17.0	5G8MDL	£25.97
-5	8	5/16	M16 x 1.5	49.8	21.8	17.0	5G10MDL	£14.08
-5	8	5/16	M18 x 1.5	50.8	22.8	19.0	5G12MDL	£30.87
-6	10	3/8	M16 x 1.5	49.8	21.9	17.0	6G10MDL	£16.45
-6	10	3/8	M18 x 1.5	50.8	22.9	19.0	6G12MDL	£16.45
-6	10	3/8	M22 x 1.5	51.8	23.9	24.0	6G15MDL	£20.46
-8	12	1/2	M18 x 1.5	60.6	23.1	22.0	8G12MDL	£25.61
-8	12	1/2	M22 x 1.5	61.5	24.0	24.0	8G15MDL	£17.74
-8	12	1/2	M26 x 1.5	63.0	25.5	27.0	8G18MDL	£34.75
-10	16	5/8	M26 x 1.5	62.5	25.0	27.0	10G18MDL	£24.61
-12	20	3/4	M26 x 1.5	75.9	24.9	27.0	12G18MDL	£27.79
-12	20	3/4	M30 x 2.0	78.0	27.0	32.0	12G22MDL	£33.50
-16	25	1	M36 x 2.0	87.2	30.4	41.0	16G28MDL	£59.93
-20	32	1.1/4	M45 x 2.0	94.1	35.1	46.0	20G35MDL	£146.13
-24	40	1.1/2	M52 x 2.0	120.0	46.4	55.0	24GSP42MDL	£138.73

Unless otherwise stated the coupling meets the pressure rating requirements of the respective international standard.

DIN 24° FDHORX

Female DIN 'O' ring swivel. 24° cone. Heavy series.

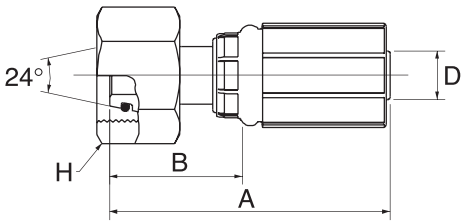

D				A	B	H	REF.	
-size	DN	"		mm	mm	mm	G	
-4	6	1/4	M14 x 1.5	51.8	25.8	17.0	4G6FDHORX	£18.19
-4	6	1/4	M16 x 1.5	54.4	28.4	19.0	4G8FDHORX	£14.46
-4	6	1/4	M18 x 1.5	55.3	29.3	22.0	4G10FDHORX	£15.48
-4	6	1/4	M20 x 1.5	55.7	29.7	24.0	4G12FDHORX	£16.85
-5	8	5/16	M18 x 1.5	58.0	29.9	22.0	5G10FDHORX	£17.21
-5	8	5/16	M20 x 1.5	58.0	30.0	24.0	5G12FDHORX	£16.01
-5	8	5/16	M22 x 1.5	58.0	30.0	27.0	5G14FDHORX	£91.61
-6	10	3/8	M18 x 1.5	57.1	29.2	22.0	6G10FDHORX	£22.83
-6	10	3/8	M20 x 1.5	57.8	29.9	24.0	6G12FDHORX	£15.69
-6	10	3/8	M22 x 1.5	60.4	32.5	27.0	6G14FDHORX	£18.61
-8	12	1/2	M20 x 1.5	70.2	32.7	24.0	8G12FDHORX	£25.27
-8	12	1/2	M22 x 1.5	70.0	32.5	27.0	8G14FDHORX	£41.93
-8	12	1/2	M24 x 1.5	71.1	33.6	30.0	8G16FDHORX	£21.16
-8	12	1/2	M30 x 2.0	75.5	38.0	36.0	8G20FDHORX	£71.15
-10	16	5/8	M24 x 1.5	71.9	34.4	30.0	10G16FDHORX	£56.43
-10	16	5/8	M30 x 2.0	75.7	38.2	36.0	10G20FDHORX	£31.63
-12	20	3/4	M30 x 2.0	91.7	40.7	36.0	12G20FDHORX	£61.06
-12	20	3/4	M36 x 2.0	96.1	45.1	46.0	12G25FDHORX	£45.98
-16	25	1	M36 x 2.0	102.5	45.7	46.0	16G25FDHORX	£77.72
-16	25	1	M42 x 2.0	106.0	49.2	50.0	16G30FDHORX	£72.84
-20	32	1.1/4	M52 x 2.0	116.8	57.8	60.0	20G38FDHORX	£171.61
-24	40	1.1/2	M52 x 2.0	150.0	76.3	60.0	24GSP38FDHORX	£158.55

Unless otherwise stated the coupling meets the pressure rating requirements of the respective international standard.

DIN 24° FDHORX45

Female DIN 'O' ring swivel. 24° cone. Heavy series. 45° swept elbow. Drop dimensions meet ISO 12151-2.

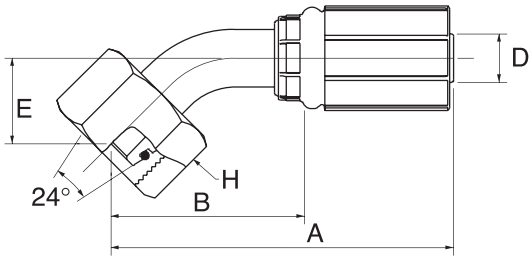

D				A	B	E	H	REF.	
-size	DN	"		mm	mm	mm	mm	G	
-4	6	1/4	M16 x 1.5	62.6	36.5	16.2	19.0	4G8FDHORX45	£30.15
-4	6	1/4	M18 x 1.5	64.4	38.3	17.9	22.0	4G10FDHORX45	£27.62
-4	6	1/4	M20 x 1.5	66.7	40.7	18.3	24.0	4G12FDHORX45	£23.55
-5	8	5/16	M18 x 1.5	67.3	39.3	17.1	22.0	5G10FDHORX45	£39.96
-5	8	5/16	M20 x 1.5	67.7	39.7	18.9	24.0	5G12FDHORX45	£31.82
-6	10	3/8	M18 x 1.5	68.5	40.5	18.6	22.0	6G10FDHORX45	£43.51
-6	10	3/8	M20 x 1.5	68.8	40.9	18.9	24.0	6G12FDHORX45	£26.22
-6	10	3/8	M22 x 1.5	70.9	43.0	21.0	27.0	6G14FDHORX45	£71.53
-8	12	1/2	M22 x 1.5	91.5	54.0	27.1	27.0	8G14FDHORX45	£35.51
-8	12	1/2	M24 x 1.5	86.0	48.5	21.6	30.0	8G16FDHORX45	£35.72
-10	16	5/8	M30 x 2.0	93.1	55.7	24.9	36.0	10G20FDHORX45	£60.00
-12	20	3/4	M30 x 2.0	109.4	58.4	24.9	36.0	12G20FDHORX45	£109.35
-12	20	3/4	M36 x 2.0	118.6	67.6	31.2	46.0	12G25FDHORX45	£97.82
-16	25	1	M36 x 2.0	146.5	89.7	35.1	46.0	16G25FDHORX45	£129.19
-16	25	1	M42 x 2.0	139.8	83.0	35.1	50.0	16G30FDHORX45	£138.86
-20	32	1.1/4	M52 x 2.0	166.9	107.9	42.5	60.0	20G38FDHORX45	£226.63
-24	40	1.1/2	M52 x 2.0	208.9	135.2	44.0	60.0	24GSP38FDHORX45	£213.06

Unless otherwise stated the coupling meets the pressure rating requirements of the respective international standard.

DIN 24° FDHORX90

Female DIN 'O' ring swivel. 24° cone. Heavy series. 90° swept elbow. Drop dimensions meet ISO 12151-2.

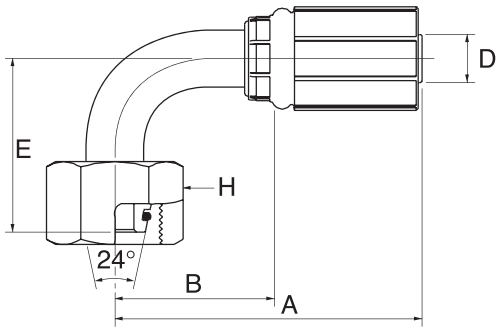

D				A	B	E	H	REF.	
-size	DN	"		mm	mm	mm	mm	G	
-4	6	1/4	M14 x 1.5	57.6	31.5	35.0	17.0	4G6FDHORX90	£28.87
-4	6	1/4	M16 x 1.5	57.5	31.5	35.0	19.0	4G8FDHORX90	£24.68
-4	6	1/4	M18 x 1.5	57.6	31.5	36.5	22.0	4G10FDHORX90	£24.36
-4	6	1/4	M20 x 1.5	59.6	33.5	37.0	24.0	4G12FDHORX90	£23.55
-5	8	5/16	M18 x 1.5	62.5	34.4	36.5	22.0	5G10FDHORX90	£37.29
-5	8	5/16	M20 x 1.5	59.0	31.0	37.0	24.0	5G12FDHORX90	£27.96
-5	8	5/16	M22 x 1.5	59.0	31.0	40.0	27.0	5G14FDHORX90	£100.64
-6	10	3/8	M18 x 1.5	60.1	32.2	36.5	22.0	6G10FDHORX90	£41.19
-6	10	3/8	M20 x 1.5	60.1	32.2	37.0	24.0	6G12FDHORX90	£26.22
-6	10	3/8	M22 x 1.5	60.1	32.2	40.0	27.0	6G14FDHORX90	£45.58
-8	12	1/2	M24 x 1.5	77.9	40.4	44.0	30.0	8G16FDHORX90	£35.72
-10	16	5/8	M30 x 2.0	84.1	46.6	51.0	36.0	10G20FDHORX90	£53.32
-10	16	5/8	M36 x 2.0	84.1	46.6	64.0	46.0	10G25FDHORX90	£76.70
-12	20	3/4	M30 X 2.0	100.3	49.3	51.0	36.0	12G20FDHORX90	£109.35
-12	20	3/4	M36 x 2.0	107.3	56.3	64.0	46.0	12G25FDHORX90	£74.12
-16	25	1	M36 x 2.0	137.8	81.0	76.0	46.0	16G25FDHORX90	£129.19
-16	25	1	M42 x 2.0	131.1	74.3	76.0	50.0	16G30FDHORX90	£131.27
-20	32	1.1/4	M52 x 2.0	151.4	92.4	87.0	60.0	20G38FDHORX90	£224.91
-24	40	1.1/2	M52 x 2.0	194.6	121.0	92.0	60.0	24GSP38FDHORX90	£213.06

Unless otherwise stated the coupling meets the pressure rating requirements of the respective international standard.

MegaCrimp®

DIN 24° MDH

Male DIN parallel. 24° inverted cone. Heavy series.

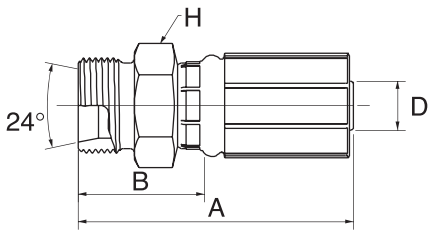

D				A	B	H	REF.	
-size	DN	"		mm	mm	mm	G	
-4	6	1/4	M16 x 1.5	53.0	27.0	17.0	4G8MDH	£26.97
-4	6	1/4	M18 x 1.5	52.5	26.5	19.0	4G10MDH	£26.92
-5	8	5/16	M18 x 1.5	53.8	25.8	19.0	5G10MDH	£25.93
-5	8	5/16	M20 x 1.5	55.8	27.8	22.0	5G12MDH	£27.94
-6	10	3/8	M18 x 1.5	55.0	27.1	19.0	6G10MDH	£20.10
-6	10	3/8	M20 x 1.5	57.5	29.6	24.0	6G12MDH	£17.15
-6	10	3/8	M22 x 1.5	59.5	31.6	24.0	6G14MDH	£19.55
-8	12	1/2	M20 x 1.5	66.5	29.0	24.0	8G12MDH	£83.87
-8	12	1/2	M24 x 1.5	69.0	31.5	27.0	8G16MDH	£22.79
-10	16	5/8	M30 x 2.0	73.5	36.0	32.0	10G20MDH	£32.12
-12	20	3/4	M30 x 2.0	84.9	33.9	32.0	12G20MDH	£53.89
-12	20	3/4	M36 x 2.0	92.0	41.0	41.0	12G25MDH	£51.79
-16	25	1	M36 x 2.0	97.2	40.4	41.0	16G25MDH	£142.25
-16	25	1	M42 x 2.0	99.2	42.4	46.0	16G30MDH	£70.85
-20	32	1.1/4	M52 X 2.0	108.1	49.1	55.0	20G38MDH	£190.72

METRIC MSP

Metric standpipe.

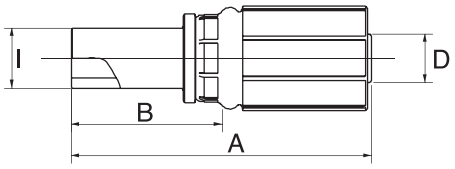

D			I	A	B	REF.	
-size	DN	"	mm	mm	mm	GS	
-4	6	1/4	L6	62.5	36.5	4G6MSP	£13.70
-4	6	1/4	L8	62.5	36.5	4G8MSP	£13.97
-4	6	1/4	L10	64.5	38.5	4G10MSP	£13.70
-5	8	5/16	L8	64.5	36.5	5G8MSP	£33.86
-5	8	5/16	L10	66.5	38.5	5G10MSP	£15.84
-5	8	5/16	L12	66.5	38.5	5G12MSP	£16.73
-6	10	3/8	L10	66.5	38.6	6G10MSP	£12.49
-6	10	3/8	L12	66.5	38.6	6G12MSP	£12.32
-8	12	1/2	L15	76.3	38.8	8G15MSP	£17.89
-10	16	5/8	L18	77.2	39.7	10G18MSP	£23.09
-12	20	3/4	L22	93.2	42.2	12G22MSP	£29.64

Unless otherwise stated the coupling meets the pressure rating requirements of the respective international standard.

POWERWASH FPWX

Female PowerWash swivel.

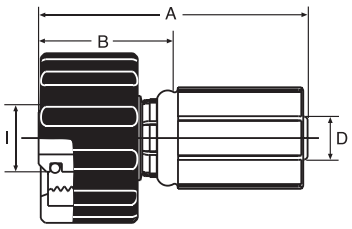

D				A	B	I	REF.	
-size	DN	"		mm	mm	mm	G	
-4	6	1/4	M22 x 1.5	54.0	28.0	13.9	4G15FPWX	£20.67
-5	8	5/16	M22 x 1.5	55.5	27.5	13.9	5G15FPWX	£19.84
-6	10	3/8	M22 x 1.5	55.5	27.6	13.9	6G15FPWX	£20.18

POWERWASH PWSP

Male PowerWash standpipe with 'O' ring.

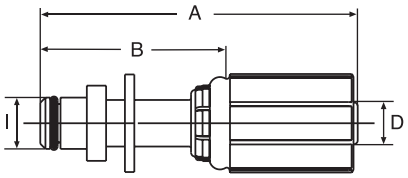

D			A	B	I	REF.	
-size	DN	"	mm	mm	mm	G	
-4	6	1/4	59.6	36.5	9.9	4G10PWSP	£61.52
-5	8	5/16	64.5	36.5	9.9	5G10PWSP	£16.03
-5	8	5/16	67.5	39.5	10.9	5G11PWSP	£16.03
-6	10	3/8	64.5	36.6	9.9	6G10PWSP	£37.63
-6	10	3/8	67.5	39.6	10.9	6G11PWSP	£37.63

Unless otherwise stated the coupling meets the pressure rating requirements of the respective international standard.

Flange kits

SAE PA-FL FLANGE KIT

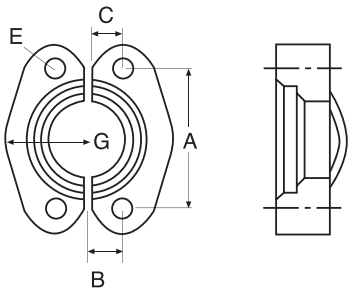

SAE flange kit. Code 61. SAE standard pressure.
Each kit comprises:
- 2 flange halves (PA-FL75)
- 4 bolts
- 4 washers
- 'O' ring (PA-FL77)

D				A	B	C	E	G	REF.	
-size	DN	"	MPa	mm	mm	mm	mm	mm	PA-FL	
-8	12	1/2	35.0	38.1	8.7	7.7	8.5	21.8	8PA-FL	£22.37
-12	19	3/4	35.0	47.6	11.1	10.1	10.5	24.9	12PA-FL	£22.28
-16	25	1	35.0	52.3	13.1	12.1	10.5	28.1	16PA-FL	£23.96
-20	32	1.1/4	28.0	58.7	15.1	14.1	11.9	35.3	20PA-FL	£31.25
-24	40	1.1/2	21.0	69.8	17.8	16.9	13.5	40.1	24PA-FL	£40.28
-32	51	2	21.0	77.7	20.4	20.4	13.5	47.2	32PA-FL	£78.74

Code 61: -8, -12, -16: 35.0 MPa (5000 psi); -20: 28.0 MPa (4000 psi); -24 & -32: 21.0 MPa (3000 psi).

SAE PH-FLH FLANGE KIT

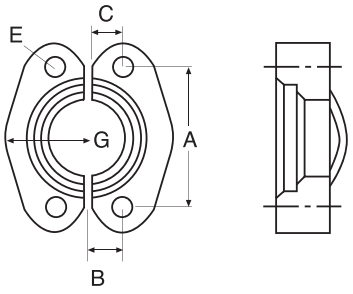

SAE flange kit. Code 62. SAE high pressure.
Each kit comprises:
- 2 flange halves (PH-FLH75)
- 4 bolts
- 4 washers
- 'O' ring (PH-FLH77)

D				A	B	C	E	G	REF.	
-size	DN	"	MPa	mm	mm	mm	mm	mm	PH-FLH	
-8	12	1/2	41.5	40.5	9.1	8.1	8.5	22.6	8PH-FLH	£27.48
-12	19	3/4	41.5	50.8	11.9	10.9	10.5	28.9	12PH-FLH	£27.94
-16	25	1	41.5	57.1	13.9	12.9	12.0	33.8	16PH-FLH	£37.93
-20	32	1.1/4	41.5	66.7	15.9	14.9	13.5	37.6	20PH-FLH	£47.93
-24	40	1.1/2	41.5	79.4	18.2	17.3	16.5	46.5	24PH-FLH	£101.15
-32	51	2	41.5	96.8	22.2	21.1	20.0	55.9	32PH-FLH	£164.13

SAE PH-FLH DUAL FLANGE KIT

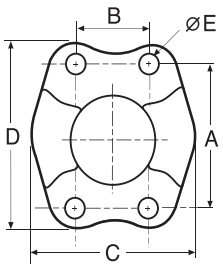

SAE flange kit. Code 62 (metric). SAE high presssure.
Each kit comprises:
- dual flange
- 4 bolts
- 4 washers
- 'O' ring

D				A	B	C	D	E	REF.	
-size	DN	"	MPa	mm	mm	mm	mm	mm	PH-FLH	
-8	13	1/2	40.0	40.5	18.2	48.0	57.0	8.8	8FLHCFM	£28.68
-12	19	3/4	40.0	50.8	23.8	60.0	72.0	10.5	12FLHCFM	£33.60
-16	25	1	40.0	57.2	27.8	70.0	81.0	13.0	16FLHCFM	£39.43
-20	32	1.1/4	40.0	66.7	31.8	78.0	95.0	15.0	20FLHCFM	£57.01
-24	38	1.1/2	40.0	79.4	36.6	96.0	113.0	17.0	24FLHCFM	£348.32
-32	51	2	40.0	96.8	44.4	114.0	134.0	22.1	32FLHCFM	£539.33

SELF-ASSEMBLY MACHINERY

Workshop

In the Gates workshop, safe, fast and efficient assembly of hydraulic hoses and couplings is made simple. All machines are custom-designed to work with a well-defined range of Gates hoses and couplings allowing production of factory-quality assemblies fully complying with European Directives and the most stringent international standards.

No matter what your workshop needs, whether you are a starter, a professional, or a full-service workshop, Gates has the right product offering for you.

	Cutting	Marking	Crimping
	MKX 50	MSX 50	MCX 50
Full service 2"		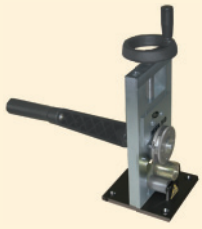	
	MKX 30	MSX 50	MCX 30
Professional service up to 1.1/4"			
	MKX 25	MSX 50	MCX 25
Starter up to 1"		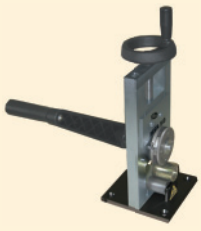	

Mobile service

A Gates hose assembly is much more than the sum of its components. It is the combined result of a rigorous test regime and of a tightly controlled manufacturing process, both at Gates and at the point of assembly.

To reduce the risk of premature failure due to variations in the assembly process, Gates has developed a special proposition for mobile service operations allowing them to benefit from the simplified and superior Global range of no-skive hoses and couplings.

Thanks to the Gates Integrated System, mobile service operators can offer their customers the superior quality and performance which make the world's most trusted hose assemblies.

	Cutting	Marking	Crimping
	MKX 25	MSX 50	MCX 30
Professional service up to 1.1/4"		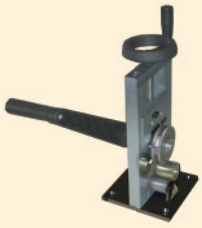	
	MKX 25	MSX 50	MCX 25
Starter up to 1"			

Field service

In the field, every minute counts. In today's environment, equipment, whether it be agricultural, construction or mining, simply cannot afford unnecessary downtime. That's why Gates has developed a range of small, portable and easy-to-use crimpers specifically designed for end-users on site.

Since these simple, lightweight machines are designed as part of the Gates Integrated System, end-users are assured of factory-quality no-skive assemblies – even in the field!

	MCX 20	
No-skive spiral hose up to 1"		
	MC 1001 manual	**MC 1001 air operated**
Wire-braid hose up to 1"	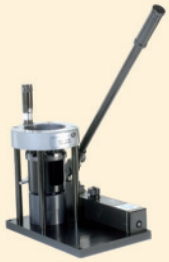	

Crimping machines: overview

MC 1001

Lightweight, portable crimper designed for reliability in field service. Comes with separate box, designed to contain complete set of dies. The pneumatic version has a foot-operated air pump. Crimps no-skive MegaCrimp® couplings for wire-braid hose up to 1".

£3142.20

Ref: 7480-19164: manual machine

£3881.04

Ref: 7480-19165: air operated machine

MCX 20

Powerful, lightweight, portable hand-operated crimper, ideal for field service operations. Comes with separate box, designed to contain complete set of dies. Crimps no-skive GlobalSpiral™ couplings up to 1" and no-skive MegaCrimp® couplings for wire-braid hose up to 1.1/4".

£4627.86

Ref: 7480-19181

Crimping machines: overview

MCX 25

Compact crimper for low-volume production. Ideal as starter machine or for small workshops. Crimps no-skive GlobalSpiral™ couplings up to 1" and no-skive MegaCrimp® couplings for wire-braid hose up to 1.1/4". Equipped with a die set storage rack allowing for logically organised die storage within easy reach of the operator, thus speeding up die selection and assembly. Also available for mobile service with DC power pack.

£8484.40

Ref: 7480-19184: 3 phase / 7480-19183: 1 phase / 7480-19182: 12V

MCX 30

Compact, operator-friendly machine to crimp the complete Gates range up to 1.1/4". Equipped with a die set storage rack allowing for logically organised die storage within easy reach of the operator, thus speeding up die selection and assembly. Also available for mobile service with DC power pack.

£11569.64

Ref: 7480-19187: 3 phase / 7480-19186: 1 phase / 7480-19185: 12V

MCX 50

Full-range crimper (up to 2" six spiral wire hose) for the professional workshop. Optional foot pedal to enable hands-free operation. Equipped with a die set storage rack allowing for logically organised die storage within easy reach of the operator, thus speeding up die selection and assembly.

£25452.00

Ref: 7480-19188: 3 phase

Crimping machines: accessories

Quick die change

The universal quick die change allows fast and easy change of dies without risk of damage to the die sets. The transparent shield of the quick die change allows you to quickly and safely position die sets into the master dies of the crimper head. A single press of the closing button is enough to lock the dies safely in place and rapidly produce a perfect hose assembly. When buying an electrical crimper, the QDC that goes together with the respective machine will be included in the package.

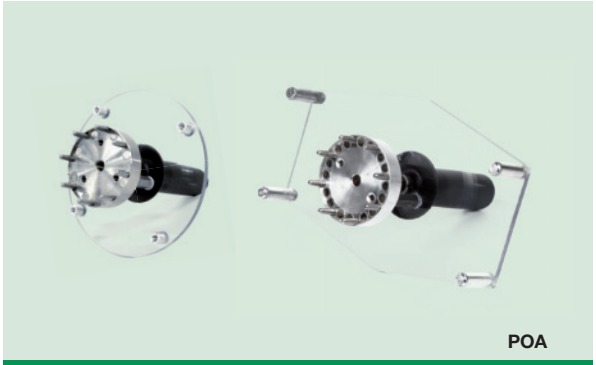

POA

Ref: 7480-19194: QDC MCX 25 **7480-19195: QDC MCX 50**
7480-19200: QDC MCX 30

Marking dies

To facilitate compliance with the European Machinery Directive, which insists that finished assemblies are marked with the manufacturer's name and the manufacturing date code, a range of marking dies is now available for the MCX 50, MCX 30, MCX 25 and MCX 20 machines.

Please contact Gates for order information.

MCX-matic electronic control

For workshop professionals who want to automate their assembly production and limit the chance for micrometer setting mistakes, MCX-matic electronic control is available. This built-in feature with pressure force display eliminates manual gauge setting and controls the maximum pressure needed for your requested crimp diameter.

POA

Ref: 7480-19196

e-Crimp: online crimp settings in seconds

You no longer need to search through a stockpile of cd-roms to find the correct crimp settings. Go to **www.gates.com/europe/e-crimp** and use our fast sign-up procedure to obtain correct crimp settings in seconds! After logging in, you can access the Crimp Data Sheets, sorted by machine type. Select your machine type and print out an up-to-date sheet with accurate crimp data information or download the pdf documents to your desktop or mobile devices. Regular e-mails from our engineers keep you up to date about the newest crimp settings in the market.

Crimping machines: technical specifications

Crimpers		MC 1001		MCX 20	
		manual	pneumatic	manual	
power supply		--	7bar/100psi	--	
maximum capacity	WB	1"	1"	1.1/4"	
	4SW	--	--	1"	
	6SW	--	--	--	
crimping force (ton)		27	27	90	
motor (kW)		--	--	--	
die set		MC1000-Dxx	MC1000-Dxx	263-Dxx	
cycle time (sec)		--	--	--	
die storage		box	box	box	
dimensions (mm)	H	460	460	370	
	W	280	280	450	
	L	390	390	470	
weight (kg)		24	22	35	
product number		7480-19164	7480-19165	7480-19181	
options	marking dies	--	--	x***	
	quick die change	--	--	--	
	MCX-matic control	--	--	--	
	back stop	--	--	--	
	foot pedal	--	standard	--	

	MCX 25			MCX 30			MCX 50
	DC	1 phase	3 phase	DC	1 phase	3 phase	3 phase
	12V	220V	380V	12V	220V	380V	380V
	1.1/4"	1.1/4"	1.1/4"	1.1/4"	1.1/4"	1.1/4"	2"
	1"	1"	1"	1.1/4"	1.1/4"	1.1/4"	2"
	--	--	--	1.1/4"	1.1/4"	1.1/4"	2"
	130	130	130	180	180	180	280
	1.8	2.2	3	1.8	2.2	3	5.5
	239-Dxx	239-Dxx	239-Dxx	239-Dxx	239-Dxx	239-Dxx	239*/237-Dxx
	39	39	19	41	41	20	18
	rack	rack	rack	rack	rack	rack	rack
	550	790	790	550	790	790	1400
	475	600	600	475	600	600	580
	395	550	550	395	550	550	610
	115	160	160	125	170	170	410
	7480-19182	7480-19183	7480-19184	7480-19185	7480-19186	7480-19187	7480-19188
	x**	x**	x**	x**	x**	x**	x**
	x	x	x	x	x	x	x
	--	--	--	--	--	--	x
	--	--	--	--	--	--	7480-19198
	--	--	--	--	--	--	7480-19199

* only with intermediate dies
** marking die in type 239 only up to 239-D37
*** marking die in type 263 only up to 263-D35

Cutting machines: overview

MKX 25
Compact cutting machine, perfectly suitable for the small workshop. Cuts up to 1.1/4" four spiral wire hose.

£2056.82

Ref: 7480-19190: 1 phase / 7480-19189: 12V

MKX 30
Robust cutter for all types of workshops. Cuts up to 1.1/4" six spiral wire hose.

£4627.86

Ref: 7480-19191: 3 phase

MKX 50
A heavy-duty pneumatic hose cutter allowing quick and reliable production across all hose size ranges. Cuts up to 2" six spiral wire hose. For workshop professionals who want to further enhance their set-up and improve the ease-of-use, we have a complete kit available including also a machine table and air compressor.

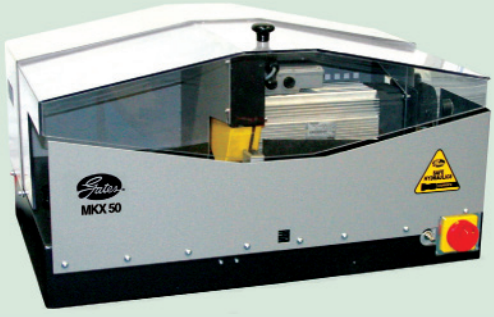

£11569.24

Ref: 7480-19192: 3 phase / 7480-19197: 3 phase with compressor kit

Tools

Marking machine

This hand-operated marking machine is a precise, compact service-free bench unit for Gates ferrules, one-piece and two-piece fittings. The MSX 50 is equipped with a hand wheel to adjust the character setting to the ferrule for the requested marking depth. The slot in the character holder allows for easy character placement. Please contact Gates for order info on the required characters.

£1636.12

Ref: 7480-19193

MegaCrimp® vernier caliper

A handy tool which measures finished outside diameters. Special design for easy measuring of the finished diameters on -4, -5 and -6 MegaCrimp®. Comes in a solid case.

£65.12

Ref: 7369-0322

MegaCrimp® insertion tool

The MegaCrimp® coupling insertion tool offers an easy way to confirm the right insertion depth for all Gates wire-braid hydraulic hoses. It also verifies the squareness of cut!

£255.64

Ref: 7482-1342

Rotational table

Rotational table ideal for the unwinding of hose coils.

POA

Ref: 7480-19135

Die selection matrix

-size	Hose					Coupling	Die	MC 1001	MCX 20	MCX 25	MCX 30	MCX 50
								MC1000-Dxx	263-Dxx	239-Dxx	239-Dxx	239*/237-Dxx
-4	M6K	M5K	M4K	M3K		G	D21	x	x	x	x	x
	CM2T	G2	G1	G1H	GTH	G	D21	x	x	x	x	x
			TH8	TH7	ACR	G	D21	x	x	x	x	x
	2JC	1JC	GP80+	GP60	GP40	G	D21	x	x	x	x	x
-5		M5K	M4K	M3K		G	D22	x	x	x	x	x
	CM2T	G2	G1		GTH	G	D22	x	x	x	x	x
				TH7		G	D22	x	x	x	x	x
	2JC	1JC	GP80+	GP60	GP40	G	D22	x	x	x	x	x
-6		M5K	M4K	M3K		G	D22	x	x	x	x	x
	CM2T	G2	G1	G1H	GTH	G	D22	x	x	x	x	x
			TH8	TH7	ACR	G	D22	x	x	x	x	x
	2JC	1JC	GP80+	GP60	GP40	G	D22	x	x	x	x	x
	EFG6K	EFG5K	EFG4K			GS	D33		x	x	x	x
-8		M5K	M4K	M3K		G	D33	x	x	x	x	x
	CM2T	G2	G1	G1H	GTH	G	D33	x	x	x	x	x
			TH8	TH7	ACR	G	D33	x	x	x	x	x
	2JC	1JC	GP80+	GP60	GP40	G	D33	x	x	x	x	x
	EFG6K	EFG5K	EFG4K			GS	D33		x	x	x	x
-10			M4K	M3K		G	D34	x	x	x	x	x
	CM2T	G2	G1	G1H	GTH	G	D34	x	x	x	x	x
					ACR	G	D34	x	x	x	x	x
			GP80+	GP60	GP40	G	D34	x	x	x	x	x
	EFG6K	EFG5K	EFG4K			GS	D35		x	x	x	x
-12			M4K	M3K		G	D35	x	x	x	x	x
	CM2T	G2	G1	G1H	GTH	G	D35	x	x	x	x	x
		GMV	TH8	TH7	ACR	G	D35	x	x	x	x	x
			GP80+	GP60	GP40	G	D35	x	x	x	x	x
	EFG6K	EFG5K	EFG4K			GS	D35		x	x	x	x
-16				M3K		G	D37	x	x	x	x	x
	CM2T	G2	G1	G1H	GTH	G	D37	x	x	x	x	x
		GMV	TH8	TH7	ACR	G	D37	x	x	x	x	x
			GP80+	GP60	GP40	G	D37	x	x	x	x	x
	EFG6K	EFG5K	EFG4K			GS	D37		x	x	x	x
-20						G	D39		x	x	x	x
		G2	G1	G1H		G	D39		x	x	x	x
		GMV			ACR	G	D39		x	x	x	x
			GP80+		GP40	G	D39		x	x	x	x
			EFG4K	EFG3K		GS	D39				x	x
	EFG6K	EFG5K				GS	D310				x	x
-24						GSP	D310					x
		G2	G1	G1H		GSP	D310					x
		GMV			ACR	GSP	D310					x
			GP80+		GP40	GSP	D310					x
				EFG3K		GSP	D311					x
	EFG6K	EFG5K				GSH	D311					x
-32						GSP	D312					x
		G2	G1	G1H		GSP	D312					x
		GMV			ACR	GSP	D312					x
			GP80+			GSP	D312					x
				EFG3K		GSP	D313					x
		EFG5K				GSH	D314					x

wire braid reinforcement

4 spiral wire reinforcement

6 spiral wire reinforcement

* only with intermediate dies

PRICES ON APPLICATION

1 WAY SPECIAL BLOCK FOR NO-STOP PLOUGH AND SUB-SOILERS TILLERS....128
100mm BASE ENTRY PRESSURE GAUGES....606
100mm REAR ENTRY PRESSURE GAUGES....606
120 RELIEF VALVE CARTRIDGE NP101
12VDC COIL FOR LET DOWN VALVE NP21
12VDC MOTOR WITH RELAY NP21
12VDC DOUBLE ACTING, DOUBLE NG6 CETOP 3 SOLENOID VALVE POWER PACKS
12VDC DOUBLE ACTING, NG6 CETOP 3 SOLENOID VALVE POWER PACKS NP6
12VDC SINGLE ACTING HYDRAULIC POWER PACKS NP3
13 HP LOGSPLITTER KIT 15.7 TON FORCE 415
2 BUTTON SINGLE ACTING 3 WIRE PENDANT NP22
2 BUTTON DOUBLE ACTING 4 WIRE PENDANT NP22
2 WAY BALL VALVES....122
2 WAY BALL VALVES WITH FIXING HOLES 122
2 WAY CARTRIDGE ELECTRIC VALVES....100
2 WAY FLOW DIVIDERS....119
20 RELIEF VALVE CARTRIDGE NP98
24VDC COIL FOR LET DOWN VALVE NP21
24VDC DOUBLE ACTING, DOUBLE NG6 CETOP 3 SOLENOID VALVE POWER PACKS NP18
24VDC DOUBLE ACTING, NG CETOP 3 SOLENOID VALVE POWER PACKS NP15
24VDC MOTOR WITH RELAY NP21
24VDC SINGLE ACTING HYDRAULIC POWER PACKS NP12
3 PORT FLOW CONTROL VALVE EXCESS TO TANK FLANGEABLE ON DANFOSS MOTORS OMP/OMR....207
3 PORT FLOW CONTROL VALVE WITH EXCESS BACK TO TANK 118
3 PORT FLOW CONTROL VALVE WITH EXCESS TO TANK WITH CHECK VALVE....119
3 PORT FLOW CONTROL VALVE WITH ONGOING PRESSURE LINE....118
3 PORT FLOW CONTROLVALVE EXCESS TO TANK FLANGEABLE ON DANFOSS MOTORS OMP/OMR....119, NP115
3 POSITION DETENT KITS....76
3 WAY BALL VALVES....122
3 WAY BALL VALVES WITH FIXING HOLES 123
3 WAY DIVERTER VALVES....123
3 WAY SOLENOID DIVERTER VALVES....79
3 WAYS SINGLE PILOT OPERATED CHECK VALVES, IN LINE 106
35 RELIEF VALVE CARTRIDGE NP99
4 BUTTON DOUBLE ACTING 6 WIRE PENDANT NP23
4 POSITION FLOATING FOURTH 'Z' SPOOL....76
4 WAY DIVERTER VALVES....123
40mm BASE ENTRY PRESSURE GAUGES....604
40mm REAR ENTRY PRESSURE GAUGES....604
5.5 HP LOGSPLITTER KIT 7.7 TON FORCE 415
50mm BASE ENTRY PRESSURE GAUGES....604
50mm REAR ENTRY PRESSURE GAUGES....604
6 WAY DIVERTER VALVES....124
6 WAY DIVERTER VALVES, STEEL BODY 124
6 WAY SOLENOID DIVERTER VALVES....79
63mm BASE ENTRY PRESSURE GAUGES....605
63mm REAR ENTRY PRESSURE GAUGES....605
80 RELIEF VALVE CARTRIDGE 100NP....
9 HP LOGSPLITTER KIT 10 TON FORCE 415
90° DEGREE ANGLE GAUGE ISOLATOR NEEDLE VALVES....607
90° DEGREE ROTATING COUPLING....126
90° DEGREE PRESSURE COMPENSATED 90 FLOW REGULATOR VALVES....117

A

AIR BREATHERS....534,763
ALUMINIUM OIL TANKS 585
ALUMINUIM HYDRAULIC PTO GEARBOXES AND PUMP ASSEMBLIES....466
ANGLED FILLER BREATHER 534
ANTI-CAVITATION VALVES TYPE 'C' C/A OR C C/AB....78
ANTI-SHOCK AND ANTI-CAVITATION VALVES TYPE 'UC' UC/A UCAB....78
ANTI-SHOCK VALVES TYPE '0A' 0A/A OR B 0AAB 78
ATTACHMENTS 392

B

BALL VALVES 122
BARREL FLOW CONTROL VALVES NO CHECK 117
BARREL FLOW CONTROL VALVES WITH CHECK 117
BDR TYPE BOLT ON VALVES....206
BDS TYPE BOLT ON VALVES....206
BEARING SUPPORTS 307
BELL HOUSINGS AND DRIVE COUPLINGS FOR ELECTRIC MOTORS....417
BIDIRECTIONAL CHECK VALVE NP109
BOLT ON HYDRAULIC VALVES TO SUIT FLOWFIT AND M + S HYDRAULIC MOTORS 206
BONDED SEALS 621
BRAKE CYLINDER (SINGLE ACTING)....390
BRAKES FOR HYDRAULIC MOTORS 205
BRAKE UNCLAMPING VALVE, FLANGEABLE TO DANFOSS MOTORS OMP/OMR NP116
BRAKE UNCLAMPING VALVE, FLANGEABLE TO DANFOSS MOTORS OMS NP117
BREATHER AND FILLING PLUG....547
BREATHER PLUG....544
BREATHER PLUG WITH DOUBLE VALVE 544
BREATHER PLUGS ON INCLINED FLANGE 547
BREATHERS 534, 541

C

CARTRIDGE SCREWED-IN HEATERS 599
CARTRIDGE SCREWED-IN HEATERS WITH TEMPERATURE ADJUSTMENT 600
CAST IRON PTO GEAR BOXES WITH GROUP 3 PUMPS....467
CETOP 3 CHECK VALVES 96
CETOP 3 COUNTER BALANCE VALVE....96
CETOP 3 FLOW CONTROL C/W CHECK VALVE 96
CETOP 3 NG6 MODULAR CHECK VALVE NP40
CETOP 3 NG6 MODULAR COUNTER BALANCE VALVE NP46
CETOP 3 NG6 MODULAR FLOW CONTROL VALVE WITH CHECK NP44
CETOP 3 NG6 MODULAR PILOT OPERATED CHECK VALVE.... NP42
CETOP 3 NG6 MODULAR REDUCING VALVE.... NP38
CETOP 3 NG6 MODULAR RELIEF VALVE NP36
CETOP 3 NG6 SOLENOID DIRECTIONAL CONTROL VALVES.... NP32
CETOP 3 NG6 SPRING CENTERED 3 POSITION DOUBLE ACTING SOLENOID DIRECTIONAL CONTROL VALVE NP34
CETOP 3 NG6 SPRING OFFSET 2 POSITION SINGLE ACTING SOLENOID DIRECTIONAL CONTROL VALVE.... NP34
CETOP 3 NG6 STEEL COVER PLATE.... NP54
CETOP 3 NG6 STEEL PARALLEL CIRCUIT MANIFOLD NP48
CETOP 3 NG6 STEEL PARALLEL CIRCUIT MANIFOLD WITH RELIEF VALVE NP50
CETOP 3 NG6 STEEL SUBPLATE WITH BASE PORTS NP53
CETOP 3 NG6 STEEL SUBPLATE WITH SIDE PORTS NP52
CETOP 3 PILOT OPERATED CHECK VALVES....96
CETOP 3 PRESSURE REDUCING VALVES 96
CETOP 3 RELIEF VALVES 96
CETOP 3 SEQUENCE VALVES 96
CETOP 3 VALVES NP31
CETOP 5 CHECK VALVES 97
CETOP 5 COUNTER BALANCE VALVE....97
CETOP 5 FLOW CONTROL C/W CHECK VALVE 97
CETOP 5 NG10 MODULAR CHECK VALVE NP64
CETOP 5 NG10 MODULAR FLOW CONTROL VALVE.... NP68
CETOP 5 NG10 MODULAR PILOT OPERATED CHECK VALVE... NP66
CETOP 5 NG10 MODULAR REDUCING VALVE.... NP62
CETOP 5 NG10 MODULAR RELIEF VALVE NP60
CETOP 5 NG10 SOLENOID DIRECTIONAL CONTROL VALVES.. NP56
CETOP 5 NG10 STEEL COVER PLATE.... NP76
CETOP 5 NG10 STEEL PARALLEL CIRCUIT MANIFOLD NP70
CETOP 5 NG10 STEEL PARALLEL CIRCUIT MANIFOLD WITH RELIEF VALVE NP72
CETOP 5 NG10 STEEL SUBPLATE WITH BASE PORTS NP75
CETOP 5 NG10 STEEL SUBPLATE WITH SIDE PORTS NP74
CETOP 5 PILOT OPERATED CHECK VALVES....97
CETOP 5 PRESSURE REDUCING VALVES 97
CETOP 5 RELIEF VALVES 96
CETOP 5 SEQUENCE VALVES 97
CETOP 7 COUNTER BALANCE VALVE....98
CETOP 7 FLOW CONTROL C/W CHECK VALVE 98
CETOP 7 PILOT OPERATED CHECK VALVES 98
CETOP 7 PRESSURE REDUCING VALVES 97
CETOP 7 RELIEF VALVES 97
CETOP 8 CHECK VALVES 98
CETOP 8 COUNTER BALANCE VALVE....98
CETOP 8 FLOW CONTROL C/W CHECK VALVE 98
CETOP 8 PILOT OPERATED CHECK VALVES....98
CETOP 8 PRESSURE REDUCING VALVES 98
CETOP 8 RELIEF VALVES 98
CETOP INTERFACE FILTERS 740
CETOP MANIFOLDS....92
CHAIN TYPE COUPLINGS 512,515
CHECK VALVES....115
CLEAN OIL TRANSFER SYSTEMS 12 V....625
CLEAN OIL TRANSFER SYSTEMS 240V....626
CLOGGING INDICATORS 748
CLOSED CENTRE VALVE SOLUTIONS 78
CLUTCHES 441,
COMPACT DOUBLE PILOT OPERATED CHECK VALVE NP107
CUSTOM BUILT POWER UNITS....51

D

DC MOTOR PUMP SET 44
DC PUMPS VISCOMAT DC....624
DIESEL ENGINE....58
DIESEL ENGINE BELL HOUSING AND DRIVE COUPLING KITS....437
DIFFERENTIAL DUAL CROSS RELIEF VALVES....112
DIFFERENTIAL TYPE RELIEF VALVES 111
DIFFUSERS....531
DIN ADJUSTABLE HOSE BURST VALVE NP110
DIRECT ACTING REDUCING VALVE WITH CHECK NP106
DIRECT ACTING SEQUENCE VALVES....120
DIRECT OPERATED RELIEF VALVE 99
DIVERTER VALVES 79,123
DOME-SHAPED LEVEL GAUGE....545
DOUBLE ACTING HANDPUMP 326
DOUBLE ACTING HANDPUMP ASSEMBLIES....340
DOUBLE ACTING HYDRAULIC CIRCUIT POWER PACKS....24
DOUBLE ACTING HYDRAULIC CYLINDER 376
DOUBLE ACTING HYDRAULIC CYLINDER (FRONT FLANGE) 382
DOUBLE ACTING PLOUGH OUTSIDE DRILLS OVERTURNING VALVES FOR CYLINDER WITH MEMORY AND WITHOUT MEMORY 128
DOUBLE ACTING PLOUGH OVERTURNING VALVE BY DOWN MOULDBOARD LOAD SHIFTING....128
DOUBLE ACTING PLOUGH OVERTURNING VALVE BY UP MOULDBOARD LOAD SHIFTING....128
DOUBLE ACTING PLOUGH OVERTURNING VALVES 127
DOUBLE ACTING PLOUGH OVERTURNING VALVES WITH RELIEF VALVE....127
DOUBLE ACTION HANDPUMP FOR SINGLE ACTING CYLINDER 325
DOUBLE OVERCENTRE VALVES....107
DOUBLE OVERCENTRE VALVES FLANGEABLE....108
DOUBLE OVERCENTRE VALVES FLANGEABLE BY SCREW....108
DOUBLE OVERCENTRE VALVES FLANGEABLE CLOSED CENTRE NP95,NP97
DOUBLE OVERCENTRE VALVES FOR CENTRE CLOSED 109
DOUBLE OVERCENTRE VALVES TYPE A 108
DOUBLE PILOT OPERATED CHECK VALVE WITH ADJUSTABLE BANJO 103
DOUBLE PILOT OPERATED CHECK VALVES....103
DOUBLE PILOT OPERATED CHECK VALVES FOR 12MM PIPE MOUNTING (DIN 2353)....103
DOUBLE PILOT OPERATED CHECK VALVES TO WELD....105
DOUBLE PILOT OPERATED CHECK VALVES WITH LATERAL JOINS....105
DOUBLE RELIEF VALVES....111
DOWTY SEALS....621
D.P.O. CHECK VALVES 103
DRAIN FILLING PLUG WITH HEX SLOT....545
DRAIN PLUG....545
DRIVE COUPLINGS 417
DRUM AND TANK TRANSFER UNITS....626
DUAL CROSS RELIEF VALVE FLANGEABLE ON DANFOSS MOTORS OMS-OMP / OMR-OMT....113,208
DUAL CROSS RELIEF VALVE FLANGEABLE ON DANFOSS MOTORS OMP/OMR BY SCREWS NP118
DUAL CROSS RELIEF VALVE FLANGEABLE ON SAMHYDRAULIK MOTORS AG -AR 114,208

DUAL CROSS RELIEF VALVES 112,113
DUAL CROSS RELIEF VALVES WITH ANTI-CAVITATION NP114
DUAL CROSS RELIEF VALVES WITH PILOT CHECK VALVE 114
DUPLEX FILTERS 540

E

ELB BRAKES 205
ELBOW ADAPTORS 618
ELECTRIC FLOAT LEVEL SWITCHES 2 HOLE MOUNT 536
ELECTRIC FLOATING LEVEL GAUGES 536,537
ELECTRIC LEVEL INDICATORS 536
ELECTRIC MOTORS 627
ELECTRIC TYPE LEVEL INDICATORS 535
ELECTRO MAGNETIC CLUTCH AND PUMP ASSEMBLIES 481
ELECTRO MAGNETIC ON-OFF VALVE 77
ELECTRO-HYDRAULIC ON-OFF INTERNAL PILOT VERSION VALVE 77
ELECTRO-HYDRAULIC PROPORTIONAL PILOT RELIEF VALVE 101
ELECTRO-HYDRAULIC PROPORTIONAL RELIEF AND FLOW CONTROL VALVE 101
ELECTRO-HYDRAULIC PROPORTIONAL RELIEF VALVE 101
ELECTRO-HYDRAULIC PROPORTIONAL VALVES 101
ELECTROMAGNETIC CLUTCHES 468
ELECTRO-PNEUMATIC ON-OFF 76
END STROKE VALVES 125
END STROKE VALVES, NORMALLY CLOSED 125
END STROKE VALVES, NORMALLY OPEN 125
ENGINE COUPLINGS 513
EPM HYDRAULIC MOTOR 202
EPMM HYDRAULIC MOTOR 202
EPMS HYDRAULIC MOTOR 203
EPMT HYDRAULIC MOTOR 204
EPMV HYDRAULIC MOTOR 204
EPRM HYDRAULIC MOTOR 203
ET-ELECTRIC DC MOTOR PUMP SET 44
EXTENSION FOR OIL WITH BREATHER 544
EXTERNAL SINGLE PILOT OPERATED CHECK VALVES 107

F

FA-1 RETURN LINE SPIN-ON 637
FA-1 SUCTION SPIN-ON FILTERS 688
FA-2 TANK TOP RETURN LINE SPIN-ON 643
FA-4 INLINE PRESSURE AND RETURN SPIN ON 681
FB-1 SERIES AIR BREATHER FILTERS 763
FCR-7 TANK TOP TETURN LINE 648
FD-3 INLINE MEDIUM PRESSURE MAX 100 BAR 715
FDM-1 CETOP MOUNTABLE HIGH PRESSURE MAX 315 BAR 740
FEMALE THREADED PLUG 546
FEMALE THREADED PLUG WITH BREATHER 546
FEMALE THREADED PLUG WITH BREATHER AND DIPSTICK 546
FILLER BREATHER AND AIR FILTER 532
FILLER BREATHERS 531
FILLING AND BREATHER PLUGS WITH LEVEL DIPSTICK ON INCLINED FLANGE 547
FILLING PLUG 545
FILLING PLUG AND BREATHER 544
FILLING PLUG ON INCLINED FLANGE 547
FILLING PLUG WITH BREATHER 544,546,547
FILLING PLUG WITH BREATHER AND LOCK-HOLDER 546
FILLING PLUG WITH BREATHER AND MILLED HEAD 544
FILLING PLUG WITH BREATHER FOR SIDE APPLICATIONS 547
FILLING PLUG WITH DIPSTICK 545
FILLING PLUG WITH DIPSTICK AND BREATHER 545
FILLING PLUG WITH DIPSTICK AND BREATHER HOLE 545
FILLING PLUG WITH FLANGE TO BE WELDED 546
FILLING PLUG WITH LOCK-HOLDER 546
FILLING PLUG WITH THREADED MOUNT 546
FILLING PLUGS 546
FILLING PLUGS ON INCLINED FLANGE 547
FILTRATION 519
FILTRATION TROLLEY 623
FILTREC CLOGGING INDICATORS 748
FILTREC FA-1 RETURN LINE SPIN-ON 637
FILTREC FA-1 SUCTION SPIN-ON 688
FILTREC FA-2 TANK TOP RETURN LINE SPIN-ON 643
FILTREC FA-4 INLINE PRESSURE AND RETURN SPIN-ON 681
FILTREC FB-1 SERIES AIR BREATHER FILTERS 763
FILTREC FCR-7 TANK TOP RETURN LINE 648
FILTREC FD-3 INLINE MEDIUM PRESSURE MAX 100 BAR 715
FILTREC FDM-1 CETOP MOUNTABLE HIGH PRESSURE MAX BAR 740 315
FILTREC FILLER BREATHERS 531, 767
FILTREC FL SERIES FLUID LEVEL TEMPERATURE GAUGES 760
FILTREC FR-1 TANK TOP RETURN LINE 665
FILTREC FR-8 TANK TOP RETURN LINE 674
FILTREC FS-1 SUCTION STRAINERS 694
FILTREC FS-7 IN TANK MOUNTED SUCTION STRAINERS 699
FILTREC FT SERIES FILLER BREATHER FILTERS 767
FILTREC FVR-7 IN TANK RETURN LINE 658
FILTREC F100-XD INLINE HIGH PRESSURE MAX 80-100 BAR 706
FILTREC F160-XD INLINE MEDIUM PRESSURE MAX 160 BAR 721
FILTREC F280-D1 INLINE HIGH PRESSURE MAX 280 BAR 730
FILTREC INLINE HIGH PRESSURE FILTERS 80-315 BAR 740
FILTREC INLINE MEDIUM PRESSURE FILTERS 706
FILTREC INLINE PRESSURE AND RETURN SPIN ON FA4 681
FILTREC IN TANK RETURN LINE FVR-7 658
FILTREC IN TANK MOUNTED SUCTION STRAINERS FS-7 699
FILTREC LEVEL INDICATORS 535, 760
FILTREC RETURN LINE FILTERS FA-1 637
FILTREC SIMPLEX AND DUPLEX INDUSTRIAL FILTERS 540
FILTREC SUCTION SPIN-ON FA-1 688
FILTREC SUCTION STRAINERS FS-1 694
FILTREC TANK TOP RETURN LINE SPIN ON FA-2 643
FILTREC TANK TOP RETURN LINE FCR-7 648
FILTREC TANK TOP RETURN LINE FR-1 665
FILTREC TANK TOP RETURN LINE FR-8 674
FIXED SETTING THROTTLE CHECK VALVES 117
FLANGE COUPLINGS 516
FLANGED LEVEL INDICATOR WITH FLOAT SYSTEM 546
FLANGES FOR GROUP 4 BEARING SUPPORTS 315
FLAT-FACE QUICK RELEASE COUPLINGS 610
FLOATING FOURTH SPOOLS 76
FLOATING LEVEL GAUGE BSP AND 3 HOLE MOUNT 536
FLOW CONTROLS BOLT ONTO HYDRAULIC MOTORS 118,207
FLOW CONTROL VALVES 116
FLOW CONTROL VALVES WITHOUT CHECK 118
FLOW DIVIDERS 119
FLOW REGULATOR VALVES 117
FLOW REGULATOR VALVES WITH CHECK 118
FLOWFIT 2 WAY CARTRIDGE ELECTRIC VALVES 100
FLOWFIT 12VDC DOUBLE ACTING, DOUBLE NG6 CETOP 3 SOLENOID VALVE POWER PACKS NP9
FLOWFIT 12VDC DOUBLE ACTING,NG6 CETOP 3 SOLENOID VALVE POWER PACKS NP6
FLOWFIT 12VDC SINGLE ACTING HYDRAULIC POWER PACKS NP3
FLOWFIT 24 VDC DOUBLE ACTING, DOUBLE NG6 CETOP 3 SOLENOID VALVE POWER PACKS NP21
FLOWFIT 24VDC DOUBLE ACTING, NG6 CETOP 3 SOLENOID VALVE POWER PACKS NP15
FLOWFIT 24VDC SINGLE ACTING HYDRAULIC POWER PACKS NP12
FLOWFIT BELL HOUSINGS 418
FLOWFIT CETOP 3 NG6 MODULAR CHECK VALVE NP40
FLOWFIT CETOP 3 NG6 MODULAR COUNTER BALANCE VALVE NP46
FLOWFIT CETOP 3 NG6 MODULAR FLOW CONTROL VALVE WITH CHECK NP44
FLOWFIT CETOP 3 NG6 MODULAR PILOT OPERATED CHECK VALVE NP42
FLOWFIT CETOP 3 NG6 MODULAR REDUCING VALVE NP38
FLOWFIT CETOP 3 NG6 MODULAR RELIEF VALVE NP36
FLOWFIT CETOP 3 NG6 SOLENOID DIRECTIONAL CONTROL VALVES NP32
FLOWFIT CETOP 3 NG6 SPRING CENTERED 3 POSITION DOUBLE ACTING SOLENOID DIRECTIONAL CONTROL VALVE NP34
FLOWFIT CETOP 3 NG6 SPRING OFFSET 2 POSITION SINGLE ACTING SOLENOID DIRECTIONAL CONTROL VALVE NP34
FLOWFIT CETOP 3 NG6 STEEL COVER PLATE NP54
FLOWFIT CETOP 3 NG6 STEEL PARALLEL CIRCUIT MANIFOLD NP48
FLOWFIT CETOP 3 NG6 STEEL PARALLEL CIRCUIT MANIFOLD WITH RELIEF VALVE NP50
FLOWFIT CETOP 3 NG6 STEEL SUBPLATE WITH BASE PORTS NP53
FLOWFIT CETOP 3 NG6 STEEL SUBPLATE WITH SIDE PORTS NP52
FLOWFIT CETOP 5 VALVES NP56
FLOWFIT CETOP 5 NG10 MODULAR CHECK VALVE NP64
FLOWFIT CETOP 5 NG10 MODULAR FLOW CONTROL VALVE NP68
FLOWFIT CETOP 5 NG10 MODULAR PILOT OPERATED CHECK VALVE NP66
FLOWFIT CETOP 5 NG10 MODULAR REDUCING VALVE NP62
FLOWFIT CETOP 5 NG10 MODULAR RELIEF VALVE NP60
FLOWFIT CETOP 5 NG10 SOLENOID DIRECTIONAL CONTROL VALVES NP56
FLOWFIT CETOP 5 NG10 STEEL COVER PLATE NP76
FLOWFIT CETOP 5 NG10 STEEL PARALLEL CIRCUIT MANIFOLD NP70
FLOWFIT CETOP 5 NG10 STEEL PARALLEL CIRCUIT MANIFOLD WITH RELIEF VALVE NP72
FLOWFIT CETOP5 NG10 STEEL SUBPLATE WITH BASE PORTS NP75
FLOWFIT CETOP 5 NG10 STEEL SUBPLATE WITH SIDE PORTS NP74
FLOWFIT DIVERTER VALVE HANDLEVER MICROSWITCH NP82
FLOWFIT DRIVE COUPLINGS 419
FLOWFIT FILLER BREATHERS 531
FLOWFIT HYDRAULIC MOTORS 129
FLOWFIT HONDA PETROL POWER UNIT RECOIL START NP27
FLOWFIT HONDA PETROL POWER UNIT RECOIL START WITH LEVER VALVE NP30
FLOWFIT HYDRAULIC FLAT FACE QUICK RELEASE COUPLINGS MALE & FEMALE ENDS NP87
FLOWFIT HYDRAULIC ISO A QUICK RELEASE COUPLINGS MALE & FEMALE ENDS NP84
FLOWFIT HYDRAULIC TRAILER BRAKE QUICK RELEASE COUPLINGS NP90
FLOWFIT HYDRAULIC QUICK RELEASE COUPLINGS NP83
FLOWFIT LONCIN PETROL POWER UNIT RECOIL START NP27
FLOWFIT LONCIN PETROL POWER UNIT RECOIL START WITH LEVER VALVE NP30
FLOWFIT MOBILE ENGINE DRIVEN HYDRAULIC POWER UNITS ON WHEELS NP25
FLOWFIT POWERPACK ACCESSORIES NP21
FLOWFIT SOLENOID DIVERTER VALVES NP77
FLOWFIT SDV3- 3 WAY SOLENOID DIVERTERS NP78
FLOWFIT SDV06- 6 WAY SOLENOID DIVERTERS NP79
FLOWFIT SDV10-6WAY SOLENOID DIVERTERS NP81
FL SERIES FLUID LEVEL TEMPERATURE GAUGES 760
FLUID TRANSFER 622
FOLD LEVERS FOR HAND PUMPS 329
FOOT HANDPUMP 328
FR-1 TANK TOP RETURN LINE 665
FR-8 TANK TOP RETURN LINE 674
FS-1 SUCTION STRAINERS 694
FS-7 IN TANK MOUNTED SUCTION STRAINERS 699
FT SERIES FILLER BREATHER FILTERS 767
FVR-7 IN TANK RETURN LINE 658
F100-XD INLINE HIGH PRESURE MAX 80-100BAR 706
F280-D1 INLINE HIGH PRESSURE MAX 280 BAR 730

G

GAUGE ISOLATOR VALVES 607, NP93
GEAR MOTORS 209
GEAR PUMPS 227
GEARBOX HALF-COUPLINGS 514
GROUP 1 + GROUP 1 TANDEM PUMPS 289
GROUP 1 BEARING SUPPORT 307
GROUP 2 + GROUP 1 TANDEM PUMPS 291
GROUP 2 + GROUP 2 TANDEM PUMPS 294
GROUP 2 BEARING SUPPORT 307,313
GROUP 2 BEARING SUPPORT BOSCH 311,112
GROUP 2 BEARING SUPPORT REINFORCED 308
GROUP 3 + GROUP 1 TANDEM PUMPS 296
GROUP 3 + GROUP 2 TANDEM PUMPS 298

GROUP 3 + GROUP 3 TANDEM PUMPS....300
GROUP 3 BEARING SUPPORT....309
GROUP 3 BEARING SUPPORT BOSCH....312
GROUP 3 BEARING SUPPORT REINFORCED....309
GROUP 3 BEARING SUPPORT SAE A....310
GROUP 3 BEARING SUPPORT SAE B 2 BOLT....310
GROUP 3 CAST IRON BEARING SUPPORT....316
GROUP 3.5 BEARING SUPPORT....311
GROUP 4 BEARING SUPPORT....314

H

HALF- COUPLINGS....518
HAND OPERATED PUMPS FOR OIL DRUMS....625
HAND PUMP LEVERS....329
HANDLEVERS....76
HANDPUMP DOUBLE ACTING....326
HANDPUMP SINGLE ACTING....319
HANDPUMP TRAILER KITS....349
HANDPUMPS AND POWERPACK TRAILER KITS....349
HATZ DIESEL ENGINE DRIVEN POWER PACK....49
HATZ DIESEL ENGINES....57
HEATERS....599
HERMETIC FILLING PLUG....546
HERMETTIC FILLING PLUG WITH KEY LOCK....546
HF10 FILTRATION UNIT....623
HF500 250 BAR POWER PACKS....35
HF600 350 BAR VARIABLE FLOW HIGH PRESSURE POWER PACKS....39
HF700 PETROL ENGINE DRIVEN POWER PACKS....47
HF800 HONDA PETROL ENGINE DRIVEN POWER PACKS....45
HF900 HATZ DIESEL ENGINE DRIVEN POWER PACKS....49
HIGH PRESSURE 3-WAY DIVERTER VALVES, STEEL BODY....124
HIGH PRESSURE BALL VALVES....122
HIGH PRESSURE CARRYOVER CONNECTOR....77
HIGH PRESSURE POWER PACKS....39
HIGH PRESSURE POWER PACKS VARIABLE FLOW PUMP....39
HIGH-PRESSURE FILTERS....524, 706
HKU & HKUS STEERING UNITS....205
HONDA 13 HP PETROL ENGINE DRIVEN HYDRAULIC GEAR PUMP SET....64
HONDA 13 HP PETROL ENGINE DRIVEN HYDRAULIC GEAR PUMP HI-LOW....69
HONDA 5.3 PETROL ENGINE DRIVEN HYDRAULIC GEAR PUMP....64
HONDA 5.5HP PETROL ENGINE DRIVEN HYDRAULIC GEAR PUMP HI-LOW....67
HONDA 9 HP PETROL ENGINE DRIVEN HYDRAULIC GEAR PUMP....64
HONDA 9 HP PETROL ENGINE DRIVEN HYDRAULIC GEAR PUMP HI-LOW....68
HONDA PETROL ENGINE DRIVEN POWER PACKS....45
HONDA PETROL POWER UNIT RECOIL START....NP27
HONDA PETROL POWER UNIT RECOIL START WITH LEVER VALVE....NP30
HOSE BURST VALVES....115
HOSE BURST VALVES CARTRIDGE....115
HOSE BURST VALVES CARTRIDGE WITH FEMALE/FEMALE THREADED BODY....115
HYDRAULIC ADAPTORS....611
HYDRAULIC CARTRIDGE VALVES....102,NP93
HYDRAULIC CETOP VALVES....89
HYDRAULIC CONTROL VALVES....70
HYDRAULIC CRUTCH (SINGLE ACTING)....391
HYDRAULIC CYLINDER PARTS....392
HYDRAULIC CYLINDER SEAL KITS....412
HYDRAULIC CYLINDERS....373
HYDRAULIC FLAT FACE QUICK RELEASE COUPLINGS MALE & FEMALE ENDS....NP87
HYDRAULIC HANDPUMPS....318
HYDRAULIC HOSE-REEL VALVE....80
HYDRAULIC HOSE-REEL VALVE LEVER OPERATED C/W FLOW CONTROL....81
HYDRAULIC HOSE-REEL VALVE WITHOUT FLOW CONTROL....82
HYDRAULIC ISO A QUICK RELEASE COUPLINGS MALE & FEMALE ENDS....NP84
HYDRAULIC LEVELLING ARM....389
HYDRAULIC MOTOR....129
HYDRAULIC MOTOR BOLT ON VALVES....119,207
HYDRAULIC MOTOR CALCULATIONS....200
HYDRAULIC MOTOR PRICE LIST - FFPMM BUILD YOUR OWN...138
HYDRAULIC MOTOR PRICE LIST - FFPM BUILD YOUR OWN....148
HYDRAULIC MOTOR PRICE LIST - FFPRM BUILD YOUR OWN....159
HYDRAULIC MOTOR PRICE LIST - FFPMH BUILD YOUR OWN....168
HYDRAULIC MOTOR PRICE LIST - FFPMS BUILD YOUR OWN....177
HYDRAULIC MOTOR PRICE LIST - FFPMT BUILD YOUR OWN....191
HYDRAULIC MOTOR PRICE LIST - FFPMV BUILD YOUR OWN....199
HYDRAULIC MOTOR PRICE LIST - FFPM COMPLETE....138
HYDRAULIC MOTOR PRICE LIST - FFPM COMPLETE....148
HYDRAULIC MOTOR PRICE LIST - FFPRM COMPLETE....159
HYDRAULIC MOTOR PRICE LIST - FFPMH COMPLETE....168
HYDRAULIC MOTOR PRICE LIST - FFPMS COMPLETE....177
HYDRAULIC MOTOR PRICE LIST - FFPMT COMPLETE....192
HYDRAULIC MOTOR PRICE LIST - FFPMV COMPLETE....199
HYDRAULIC MOTOR PUMP SETS 240V AND 415V....54
HYDRAULIC MOTOR SERIES FFPM....139
HYDRAULIC MOTOR SERIES FFPMH....161
HYDRAULIC MOTOR SERIES FFPMM....131
HYDRAULIC MOTOR SERIES FFPMS....169
HYDRAULIC MOTOR SERIES FFPMSY....179
HYDRAULIC MOTOR SERIES FFPMT....184
HYDRAULIC MOTOR SERIES FFPMV....193
HYDRAULIC MOTOR SERIES FFPRM....150
HYDRAULIC ON-OFF VALVE....77
HYDRAULIC POWER PACKS....14
HYDRAULIC POWER PACKS 250 BAR....35
HYDRAULIC POWER PACKS 350 BAR....38
HYDRAULIC POWERPACK ENQUIRY FORM....51
HYDRAULIC POWERUNITS - SECTION 1B....53
HYDRAULIC PROPORTIONAL VALVE....77
HYDRAULIC PTO GEARBOXES AND PUMP ASSEMBLIES....465
HYDRAULIC QUICK RELEASE COUPLINGS....608,NP83
HYDRAULIC STAINLESS STEEL TANKS....584
HYDRAULIC STEEL TANKS....584
HYDRAULIC TANKS....584
HYDRAULIC TANKS COMPLETE WITH ACCESSORIES....592
HYDRAULIC TOP LINK (ADJUSTABLE BALL JOINT)....388
HYDRAULIC TOP LINK (FIXED)....385
HYDRAULIC TOP LINK (RAPID HOOK)....386
HYDRAULIC TRAILER BRAKE QUICK RELEASE COUPLINGS....NP90
HYDRAULIC TWO STAGE HI-LO GAER PUMPS....370

I

IE1 EFFICIENCY MOTORS TECHNICAL DATA CAST IRON HOUSING....635
IN LINE GAUGE ISOLATOR NEEDLE VALVES....607
IN LINE HIGH PRESSURE CETOP 3 MOUNTED FILTER....523
IN LINE HIGH PRESSURE MANIFOLD MOUNTED FILTER....523
IN LINE LOW PRESSURE FILTER....521
IN LINE MEDIUM PRESSURE FILTER....521
IN LINE MINI HIGH PRESSURE FILTER....523
IN LINE MOUNTING RELIEF VALVE....NP102,NP103,NP104
IN LINE ROTATING COUPLING....126
INCLINED FILLING PLUG....547
INCLINED FLANGE....547
INCLINED FLANGE FOR SIDE APPLICATIONS....547
INDUSTRIAL POWER PACKS....35
INLINE PRESSURE AND RETURN SPIN ON....681
IN-LINE RETURN FILTERS....525
IN-LINE SUCTION FILTERS....529
INSPECTION PORTHOLE OR LIQUID LEVEL....545
IN TANK MOUNTED SUCTION STRAINERS....699
IN TANK RETURN LINE FVR-7
INTEGRATED CHECK VALVES....115
ISO A QUICK RELEASE COUPLINGS....609
ISO B QUICK RELEASE COUPLINGS....610
ISOLATOR VALVES....607

J

JOYSTICK ASSEMBLY....78

K

KNURLED OIL FILL PLUG....541
KNURLED OIL FILL PLUG WITH BREATHER HOLE....541
KOMPASS CETOP 10 - NG - 32 VALVES....90
KOMPASS CETOP 3 - NG - 06 VALVES....90
KOMPASS CETOP 5 - NG - 10 VALVES....90
KOMPASS CETOP 7 - NG - 16 VALVES....90
KOMPASS CETOP 8 - NG - 25 VALVES....90
KOMPASS DIRECTIONAL CONTROL VALVES....90
KOMPASS HAND OPERATED DIRECTIONAL CONTROL VALVES....91
KOMPASS MANIFOLDS FOR CETOP VALVES....92
KOMPASS MODULAR VALVES....96
KOMPASS MODULAR VALVES CETOP....96
KOMPASS PRESSURE REDUCING VALVES....100
KOMPASS PUMPS....304
KOMPASS RELIEF VALVES....99
KOMPASS SUBPLATES FOR CETOP VALVES....91

L

LEVEL GAUGES INDICATOR....535,545,760
LEVEL INDICATOR UNIT WITH BREATHER PLUG....545
LEVEL INDICATOR WITH BREATHER....545
LEVEL SWITCHES....537
LEVER OPERATED DIVERTER VALVES 'DF' SERIES....79
LIGHT RELIEF VALVES....110
LOCKABLE CLEANABLE FILLER BREATHER....533
LOCKABLE FILLER BREATHER....533
LOG SPLITTER KITS....413
LONCIN 13 HP PETROL ENGINE DRIVEN HYDRAULIC GEAR PUMP....65
LONCIN 13 HP PETROL ENGINE DRIVEN HYDRAULIC GEAR PUMP HI-LOW....69
LONCIN 4 STROKE PETROL ENGINES....55,56
LONCIN 5.5 HP PETROL ENGINE DRIVEN GEAR PUMP HI-LOW....67
LONCIN 5.5 HP PETROL ENGINE DRIVEN HYDRAULIC GEAR PUMP....65
LONCIN 9 HP PETROL ENGINE DRIVEN HYDRAULIC GEAR PUMP....65
LONCIN 9 HP PETROL ENGINE DRIVEN HYDRAULIC GEAR PUMP HI-LOW....68
LONCIN PETROL ENGINE DRIVEN POWER PACK....47
LONCIN PETROL POWER UNIT RECOIL START....NP27
LONCIN PETROL POWER UNIT RECOIL START WITH LEVER VALVE....NP30
LOW PROFILE PLUGS....541

M

M + S HYDRAULIC MOTORS....201
MANUAL EMERGENCY VALVE....NP113
MAGNETIC DRAIN PLUG....545
MAGNETIC DRAIN PLUG WITH MILLED HEAD....545
MAGNETIC FILTER ROD....545
MAGNETIC FILTER WITH DIPSTICK AND BREATHER....545
MAGNETIC OIL - DRAIN PLUG WITH HEX SLOT....545
MALE CHECK VALVE....NP108
MALE x FIXED FEMALE & FIXED FEMALE/FEMALE ADAPTORS....617
MALE x MALE ADAPTORS....612
MALE x SWIVEL FEMALE ADAPTORS....616
MECHANICAL CLUTCHES....441
MECHANICAL DRIVE END STROKE VALVE, NORMALLY CLOSED....NP119,NP121
MECHANICAL FLOW METERS....626
MEDIUM PRESSURE FILTERS....715
MICROSWITCH KITS FOR VALVES....77
MINI-FLOW HYDRAULIC POWER PACK....42
MOBILE ENGINE DRIVEN HYDRAULIC POWER UNITS ON WHEELS....NP25
MONOBLOCK CONTROL VALVE C/W FLOW CONTROL....87
MONOBLOCK DIRECTIONAL CONTROL VALVES TYPE HDM....71
MOTOR PUMP SETS 240V AND 415V....53
MOTOR SPOOL TYPE 'C'....76
MULTIPLE GEAR PUMPS....286

N

NON PRESSURISED BREATHER....532
NORMALLY CLOSED SOLENOID VALVES....100

O

OIL DRAIN PLUG....541
OIL FILL PLUG WITH BREATHER HOLE....541
OIL FILL PLUGS....541
OIL FILLING PLUG AND BREATHER....544
OIL LEVEL GAUGES....539
OIL LEVEL INDICATOR IN TRANSPARENT THERMO PLASTIC....541
OIL LEVEL SIGHT GLASSES....541
OIL TANKS....585
OVERALL & INSTALLATION DIMENSIONS....629
OVERALL & INSTALLATION DIMENSIONS ALUMINIUM HOUSING....633
OVERALL & INSTALLATION DIMENSIONS CAST IRON HOUSING....634
OVERCENTRE VALVES....102,107
OVERCENTRE VALVES FLANGEABLE ON' DANFOSS MOTORS OMP/OMR....109
OVERCENTRE VALVES FLANGEABLE ON DANFOSS MOTORS OMS....109,207

P

P+T HYDRAULIC CIRCUIT POWERPACKS....18
PETROL + DIESEL ENGINE BELL HOUSING AND DRIVE COUPLING KITS....430
PETROL AND DIESEL POWER PACK....55
PETROL ENGINE BELL HOUSING AND DRIVE COUPLING KITS....431
PETROL ENGINE DRIVEN HYDRAULIC GEAR PUMP SETS....63
PETROL ENGINE DRIVEN HYDRAULIC HI-LOW GEAR PUMP SETS....66
PETROL ENGINE DRIVEN POWER PACKS....47
PILOT OPERATED RELIEF VALVE....99
PLASTIC HYDRAULIC THREADED AIR BREATHERS....534
PLASTIC 8 LITRE TANK....NP22
PLOUGH OVERTURNING VALVES....127
PLUGS....541
PLUGS ON INCLINED FLANGE....547
PLUGS, CAPS & CRIMP NUTS....619
PNEUMATIC ON-OFF....76
PNEUMATIC PROPORTIONAL CONTROL....76
PO CHECKS....105
POWER AMPLIFIERS FOR PROPORTIONAL VALVES....101
POWERPACK ACCESSORIES....NP1
POWERPACK TRAILER KITS....349
POWERUNIT BUILD YOUR OWN....15
PRESSURE FILTERS....521, 706, 740
PRESSURE GAUGE COVERS....605
PRESSURE GAUGE SWIVEL ADAPTORS....607
PRESSURE GAUGES....603
PRESSURE REDUCING VALVE....100
PRESSURE REDUCING VALVE, DIRECT ACTING POPPET....NP105
PRESSURISED BREATHER....532
PTO GEARBOXES....451
PUMP BEARING SUPPORTS....306
PUMPS GROUP 1 - PORT CONNECTIONS....247
PUMPS GROUP 1 - STANDARD....237
PUMPS GROUP 2 - PORT CONNECTIONS....269
PUMPS GROUP 2 - STANDARD....249
PUMPS GROUP 3 - PORT CONNECTIONS....283
PUMPS GROUP 3 - STANDARD....273
PUSH IN FILLER BREATHER....534
PUSHBUTTON END STROKE VALVES, NORMALLY CLOSED....125
PUSHBUTTON END STROKE VALVES, NORMALLY OPENED....125
PUSH-BUTTON GAUGE ISOLATOR VALVES....607

Q

QRC'S....609
QUICK RELEASE COUPLINGS....609

R

REGENERATIVE VALVE....NP112
RELIEF VALVE BLANKING PLUG....78
RELIEF VALVES....109,110
REMOTE CABLE ASSEMBLY....78
RETURN LINE SPIN-ON FA1....637
RETURN FILTERS....525
REVERSIBLE HYDRAULIC MECHANICAL CLUTCH AND PUMP ASSEMBLIES....446
RHK-TH-TUBE SCREWED-IN HEATERS WITH TEMPERATURE ADJUSTMENT....602
RHK-TUBE SCREWED-IN HEATERS....601
ROTARY HYDRAULIC OPERATED LEVER VALVES....83
ROTATING COUPLINGS....126
RUBBER PROTECTIVE GAUGE COVERS....605

S

SDV3 3 WAY SOLENOID DIVERTERS....NP78
SDV06 6 WAY SOLENOID DIVERTERS....NP79
SDV10 6 WAY SOLENOID DIVERTERS....NP82
SELF 3000 NOZZLES....626
SEQUENCE VALVES....120
SEQUENCE, COUNTER BALANCE AND UNLOADING....100
SERIES ALUMINIUM HOUSING SINGLE-PHASE 240V MULTI-MOUNT ASYNCHRONOUS MOTOR-DUAL CAPACITORS....628
SERIES ALUMINIUM HOUSING THREE-PHASE MULTI-MOUNT ASYNCHRONOUS MOTOR....631
SHUTTLE VALVES....116
SIGHT GLASSES....541
SIGHT GLASSES, PLUGS AND BREATHERS....541
SINGLE ACTING HANDPUMP....319
SINGLE ACTING HANDPUMP ASSEMBLIES....331
SINGLE ACTING HYDRAULIC CIRCUIT POWER PACKS....20
SINGLE ACTING HYDRAULIC CYLINDER....374
SINGLE ACTING HYDRAULIC POWERUNIT PACKAGE....21
SINGLE ACTING PLOUGH OVERTURNING VALVES....127
SINGLE ACTING SPOOL TYPE 'G'....76
SINGLE OVER CENTRE VALVES....107
SINGLE OVER CENTRE VALVES, 3 WAYS....109
SINGLE OVERCENTRE VALVES FLANGEABLE....108
SINGLE OVERCENTRE VALVES FLANGEABLE BY SCREW....108
SINGLE OVERCENTRE VALVE FLANGEABLE CLOSED CENTRE....NP96
SINGLE OVERCENTRE VALVES FOR CLOSED CENTRE....109
SINGLE OVERCENTRE VALVES TYPE A....108,NP94
SINGLE PILOT OPERATED CHECK VALVES....105
SINGLE PILOT OPERATED CHECK VALVES, HIGH PILOT....106
SINGLE PILOT OPERATED CHECK VALVES FLANGEABLE....106
SINGLE PILOT OPERATED CHECK VALVES FOR 12 MM PIPE MOUNTING (DIN 2353)....105
SINGLE PILOT OPERATED CHECK VALVES TYPE A....106
SINGLE PILOT OPERATED CHECK VALVES WITH MANUAL SHUT-OFF....107
SLEEVES....518
SLICE DIRECTIONAL CONTROL VALVES TYPE HDS....73
SNUBBER COVERS....605
SOLENOID CONTROLED RELIEF VALVE....99
SOLENOID DIVERTER VALVES....79,NP77
SPEED REDUCTION GEARBOXES....488
SPIN-ON AIR BREATHER....534
SPLINED BARS....511
SPLINED COUPLINGS....498,517
SPLINED HALF COUPLINGS....508,509,516
SPLINED SLEEVES....506
SPOOLS....76
STAINLESS STEEL 304 TANK....584
STANDARD HYDRAULIC TOP LINK....384
STEEL & STAINLESS STEEL OIL TANKS....583
STEEL FLOW DIVIDERS....119
STEEL HYDRAULIC THREADED AIR BREATHERS....534
STEEL OIL TANKS FOR HAND PUMPS....330
STEERING UNITS 205
STRAIGHT LEVERS FOR HAND PUMPS....329
SUCTION FILTERS....529
SUCTION LINE FILTERS....529
SUCTION SPIN-ON FILTERS....688
SUCTION STRAINERS....530,694
SUPER DELUXE PORTABLE FILTRATION UNIT....623
SWEPTS, PUSH-INS, HOSE-TAILS & FERRULES....620
SWIVEL FEMALE x SWIVEL FEMALE ADAPTORS....617

T

TANDEM GEAR PUMPS....289, 291, 294,296,298,300
TANK HEATERS....596
TANK MOUNTED SUCTION STRAINERS....699
TANK TOP MOUNTED RETURN LINE....528
TANK TOP RETURN FILTERS....527
TANK TOP RETURN LINE FCR-7....648
TANK TOP RETURN LINE FR-1....665
TANK TOP RETURN LINE FR-8....674
TANK TOP RETURN LINE SPIN ON FA-2....643
TANK TRANSFER UNITS....626
TECA SERIES IE1 EFFICIENCY MOTORS TECHNICAL DATA (AT 50HZ) ALUMINIUM....633
TECHNICAL DATA @ 110V/50HZ....630
TECHNICAL DATA @ 230V/50HZ....630
TEES & CROSS ADAPTORS....618
THREADED OIL LEVEL INDICATORS....541
TRAILER KITS....349
TURN-OVER PLOUGH CYLINDER....383
TWO PUMP "HI-LOW" UNLOADING VALVES....121
TWO PUMP "HI-LOW" UNLOADING VALVES FLANGEABLE (BASE NG6-NG10 AND NG16....121

U

UNLOADING RELIEF VALVE....99
UP50 MINI-FLOW HYDRAULIC POWER PACK....42

V

VALVE CONTROL KITS....76
VALVE FOR DRILL....NP111
VARIABLE DISPLACEMENT PISTON PUMPS 250 BAR....305
VARIABLE DISPLACEMENT PISTON PUMPS 286 BAR....305
VARIABLE DISPLACEMENT PISTON PUMPS 350 BAR....305
VARIABLE DISPLACEMENT SINGLE VANE PUMP....305
VERTICAL LEVEL INDICATOR....546
VERTICAL LEVEL INDICATOR WITH DOUBLE ELECTRICAL CONTACT....546
VERTICAL LEVEL INDICATOR WITH DOUBLE THREAD....546
VERTICAL LEVEL INDICATOR WITH DOUBLE THREAD, WITH PYREX GLASS PROTECTION....546
VERTICAL LEVEL INDICATOR WITH ELECTRICAL CONTACT....546
VERTICAL LEVEL INDICATOR WITH SINGLE THREAD....546
VERTICAL LEVEL INDICATOR WITH THERMOMETER....546
VISCOMAT OIL TRANSFER PUMPS....624
VISUAL LEVEL INDICATOR....545
VISUAL LEVEL INDICATOR NON-THREADED....545
VISUAL LEVEL INDICATOR WITH GLASS....545
VISUAL LEVEL INDICATOR WITH MILLED HEAD....545
VISUAL LEVEL INDICATORS WITH FLOAT SYSTEM....546
VR IMMERSION HEATERS....598

W

WELD ON FILLER BREATHER....533
WIRING DIAGRAMS....628,632

FLOWFIT®

SHOP NOW OPEN 6 DAYS A WEEK

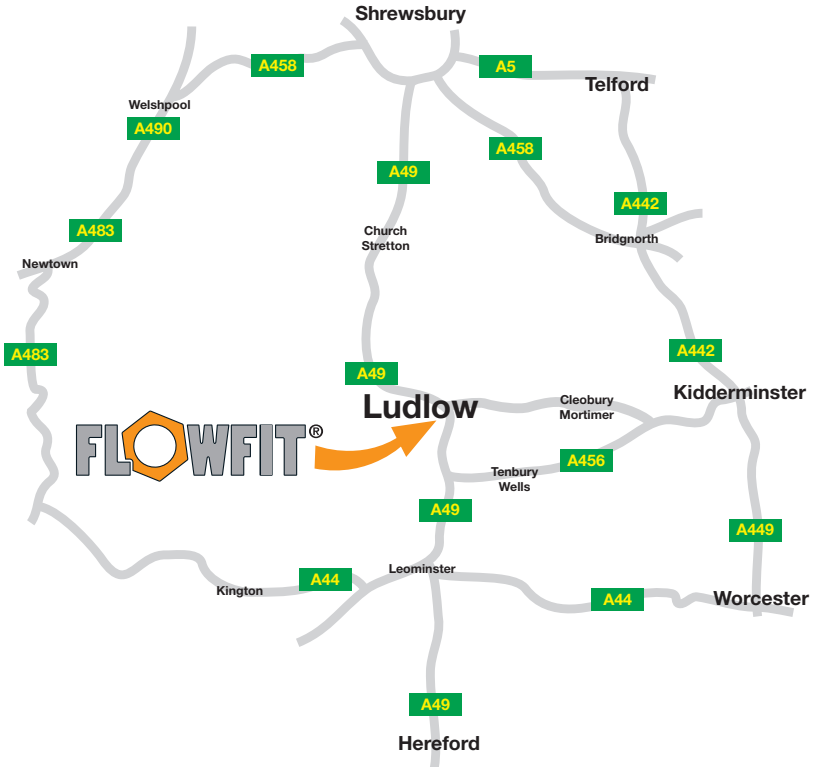

HOW TO FIND US

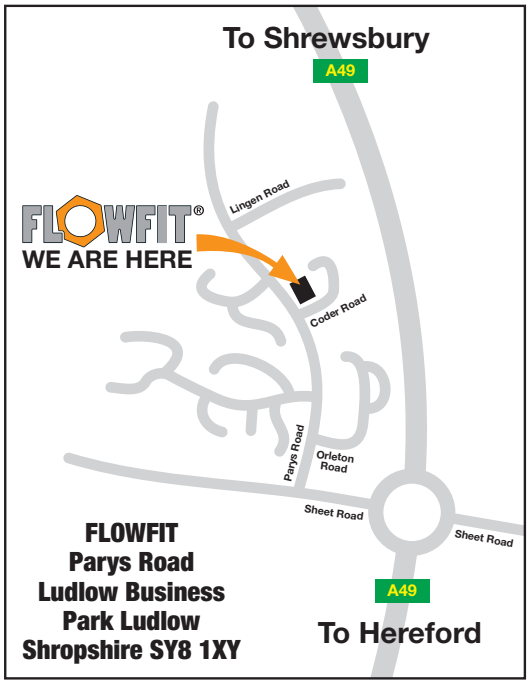

Harrier Fluid Power Ltd T/A Flowfit, Parys Road, Ludlow Business Park, Ludlow, Shropshire SY8 1XY
Telephone: +44 (0)1584 876 033 Fax: +44 (0)1584 876 044
Email: sales@flowfitonline.com

ISO 9001 REGISTERED FIRM

Every effort has been made to ensure that the information in this catalogue is correct.
However, we reserve the right to introduce changes without prior notice. This catalogue supersedes all previous catalogues.

www.flowfitonline.com